UNITED STATES PATENT AND TRADEMARK OFFICE

Commissioner for Patents
United States Patent and Trademark Office
P.O. Box 1450
Alexandria, VA 22313-1450
www.uspto.gov

JJGJR.: 06-06

Paper No: __

TECHNOLOGY, PATENTS
AND LICENSING, INC.
2003 SOUTH EASTON ROAD
SUITE 208
DOYLESTOWN PA 18901

COPY MAILED
JUN 19 2006
OFFICE OF PETITIONS

In re Application of	:	
Hall, et al.	:	
Application No. 09/867,416	:	ON PETITION
Filed: 31 May, 2001	:	
Attorney Docket No. P270569	:	

This is a decision on a petition filed on 3 May, 2006, under 37 C.F.R. §1.137(b).

For the reasons set forth below, the petition under 37 C.F.R. §1.137(b) is **DISMISSED**.

NOTES:

(1) Any petition (and fee) for reconsideration of this decision must be submitted within two (2) months from the mail date of this decision. Extensions of time under 37 C.F.R. §1.136(a) are permitted. The reconsideration request should include a cover letter entitled "Renewed Petition under 37 C.F.R. §1.137(b)."

(2) Thereafter, there will be no further reconsideration of this matter.

Further:

Petitioner does not appear to have been Counsel of Record at the time the instant

application went abandoned, and, therefore, cannot attest to the nature of the abandonment, whether unintentional or otherwise.

BACKGROUND

The record indicates:

- Petitioner failed to reply timely and properly to the Restriction Requirement mailed on 26 September, 2005, with reply due absent extension of time on or before Tuesday, 27 December, 2005;

- the instant application went abandoned by operation of law after midnight 26 December, 2005;

- the Office mailed a Notice of Abandonment on 5 April 2006;

- Petitioner filed the instant petition on 3 May, 2006, *without* fee/authorization, and, *inter alia*, reply in the form of an election amendment–however, because Petitioner was not of record at the time the application went abandoned, Petitioner is not in a position to make such a statement as to the nature of the delay, and must obtain the statement of former Counsel (of record at the time of abandonment) and/or of Applicant(s);

- Petitioners always are reminded of the burden of those registered to practice *and* all others who make representations before the Office, *inter alia*, to inquire into the underlying facts of representations made to the Office.[1]

---

[1] See supplement of 17 June, 1999. The Patent and Trademark Office is relying on petitioner's duty of candor and good faith and accepting a statement made by Petitioner. See Changes to Patent Practice and Procedure, 62 Fed. Reg. at 53160 and 53178, 1203 Off. Gaz. Pat. Office at 88 and 103 (responses to comments 64 and 109)(applicant obligated under 37 C.F.R. §10.18 to inquire into the underlying facts and circumstances when providing statements to the Patent and Trademark Office).

Specifically, the regulations at 37 C.F.R. §10.18 provide:

§ 10.18 Signature and certificate for correspondence filed in the Patent and Trademark Office.
(a) For all documents filed in the Office in patent, trademark, and other non-patent matters, except for correspondence that is required to be signed by the applicant or party, each piece of correspondence filed by a practitioner in the Patent and Trademark Office must bear a signature by such practitioner complying with the provisions of §1.4(d), §1.4(e), or § 2.193(c)(1) of this chapter.
(b) By presenting to the Office (whether by signing, filing, submitting, or later advocating) any paper, the party presenting such paper, whether a practitioner or non-practitioner, is certifying that—

(1) All statements made therein of the party's own knowledge are true, all statements made therein on information and belief are believed to be true, and all statements made therein are made with the knowledge that whoever, in any matter within the jurisdiction of the Patent and Trademark Office, knowingly and willfully falsifies, conceals, or covers up by any trick, scheme, or device a material fact, or makes any false, fictitious or fraudulent statements or representations, or makes or uses any false writing or document knowing the same to contain any false, fictitious or fraudulent statement or entry, shall be subject to the penalties set forth under 18 U.S.C. 1001, and that violations of this paragraph may jeopardize the validity of the application or document, or the validity or enforceability of any patent, trademark registration, or certificate resulting therefrom; and

(2) To the best of the party's knowledge, information and belief, formed after an inquiry reasonable under the circumstances, that —

(i) The paper is not being presented for any improper purpose, such as to harass someone or to cause unnecessary delay or needless increase in the cost of prosecution before the Office;

STATUTES, REGULATIONS AND ANALYSIS

Congress has authorized the Commissioner to "revive an application if the delay is shown to the satisfaction of the Commissioner to have been "unavoidable." 35 U.S.C. §133 (1994).[2]

The regulations at 37 C.F.R. §1.137(a) and (b) set forth the requirements for a petitioner to revive a previously unavoidably or unintentionally, respectively, abandoned application under this congressional grant of authority. The language of 35 U.S.C. §133 and 37 C.F.R. §1.137(a) is clear, unambiguous, and without qualification: the delay in tendering the reply to the outstanding Office action, as well as filing the first petition seeking revival, must have been unavoidable for the reply now to be accepted on petition.[3]

Delays in responding properly raise the question whether delays are unavoidable.[4] Where there is a question whether the delay was unavoidable, Petitioners must meet the burden of establishing that the delay was unavoidable within the meaning of 35 U.S.C. §133 and 37 C.F.R. §1.137(a).[5]

(ii) The claims and other legal contentions therein are warranted by existing law or by a nonfrivolous argument for the extension, modification, or reversal of existing law or the establishment of new law;

(iii) The allegations and other factual contentions have evidentiary support or, if specifically so identified, are likely to have evidentiary support after a reasonable opportunity for further investigation or discovery; and

(iv) The denials of factual contentions are warranted on the evidence, or if specifically so identified, are reasonably based on a lack of information or belief.

(c) Violations of paragraph (b)(1) of this section by a practitioner or non-practitioner may jeopardize the validity of the application or document, or the validity or enforceability of any patent, trademark registration, or certificate resulting therefrom. Violations of any of paragraphs (b)(2)(i) through (iv) of this section are, after notice and reasonable opportunity to respond, subject to such sanctions as deemed appropriate by the Commissioner, or the Commissioner's designee, which may include, but are not limited to, any combination of —

(1) Holding certain facts to have been established;

(2) Returning papers;

(3) Precluding a party from filing a paper, or presenting or contesting an issue;

(4) Imposing a monetary sanction;

(5) Requiring a terminal disclaimer for the period of the delay; or

(6) Terminating the proceedings in the Patent and Trademark Office.

(d) Any practitioner violating the provisions of this section may also be subject to disciplinary action. See § 10.23(c)(15).

[Added 50 FR 5175, Feb. 6, 1985, effective Mar. 8, 1985; para. (a) revised, 58 FR 54494, Oct. 22, 1993, effective Nov. 22, 1993; paras. (a) & (b) revised, paras. (c) & (d) added, 62 FR 53131, Oct. 10, 1997, effective Dec. 1, 1997; para. (a) revised, 69 FR 56481, Sept. 21, 2004, effective Oct. 21, 2004]

[2] 35 U.S.C. §133 provides:

35 U.S.C. §133 Time for prosecuting application.

Upon failure of the applicant to prosecute the application within six months after any action therein, of which notice has been given or mailed to the applicant, or within such shorter time, not less than thirty days, as fixed by the Commissioner in such action, the application shall be regarded as abandoned by the parties thereto, unless it be shown to the satisfaction of the Commissioner that such delay was unavoidable.

[3] Therefore, by example, an unavoidable delay in the payment of the Filing Fee might occur if a reply is shipped by the US Postal Service, but due to catastrophic accident, the delivery is not made.

[4] See: *Changes to Patent Practice and Procedure*; *Final Rule Notice*, 62 *Fed. Reg.* at 53158-59 (October 10, 1997), 1203 *Off. Gaz. Pat. Office* at 86-87 (October 21, 1997).

[5] See: In re Application of G, 11 USPQ2d 1378, 1380 (Comm'r Pats. 1989).

And the Petitioner must be diligent in attending to the matter.[6] Failure to do so does not constitute the care required under Pratt, and so cannot satisfy the test for diligence and due care.

(By contrast, unintentional delays are those that do not satisfy the very strict statutory and regulatory requirements of unavoidable delay, and also, by definition, are not intentional.[7]))

Allegations as to
Unintentional Delay

The requirements for relief under the provisions of 37 C.F.R. §1.137(b) are: petition, fee, reply, showing of unintentional delay, and–where appropriate–a terminal disclaimer and fee

It appears that Petitioner has not satisfied the "fee" and "statement/showing" requirements of the regulation.

CONCLUSION

The petition as considered under 37 C.F.R. §1.137(b) is **dismissed**.

Further correspondence with respect to this matter should be addressed as follows:[8]

By mail: Commissioner for Patents[9]
P.O. Box 1450
Alexandria, VA 22313-1450

By FAX: IFW Formal Filings
(571) 273-8300
ATTN.: Office of Petitions

---

[6] See: Diligence in Filing Petitions to Revive and Petitions to Withdraw the Holding of Abandonment, 1124 Off. Gaz. Pat. Office 33 (March 19, 1991). It was and is Petitioner's burden to exercise diligence in seeking either to have the holding of abandonment withdrawn or the application revived. See 1124 Off. Gaz. Pat. Office supra.

[7] Therefore, by example, an unintentional delay in the reply might occur if the reply and transmittal form are to be prepared for shipment by the US Postal Service, but other pressing matters distract one's attention and the mail is not timely deposited for shipment.

[8] On July 15, 2005, the Central Facsimile (FAX) Number changed to (571) 273-8300. The number (571) 273-8300 is be the only facsimile number recognized for centralized delivery. (For further information. see: http://www.uspto.gov/web/offices/pac/dapp/opla/preognotice/cfax062005.pdf .)

[9] To determine the appropriate addresses for other subject-specific correspondence, refer to the USPTO Web site at www.uspto.gov.

By hand: Mail Stop: Petition
Customer Service Window
Randolph Building
401 Dulany Street
Alexandria, VA 22314

Telephone inquiries concerning this decision may be directed to the undersigned at (571) 272-3214.

John J. Gillon, Jr.
Senior Attorney
Office of Petitions

UNITED STATES PATENT AND TRADEMARK OFFICE

Commissioner for Patents
United States Patent and Trademark Office
P.O. Box 1450
Alexandria, VA 22313-1450
www.uspto.gov

JJGJR.: 08-07

Paper No: __

TECHNOLOGY, PATENTS
AND LICENSING, INC.
2003 SOUTH EASTON ROAD
SUITE 208
DOYLESTOWN PA 18901

COPY MAILED
AUG 27 2007
OFFICE OF PETITIONS

In re Application of	:	
Hall, et al.	:	
Application No. 09/867,416	:	ON PETITION
Filed: 31 May, 2001	:	
Attorney Docket No. P270569	:	

This is a decision on a petition filed on 4 August, 2006, under 37 C.F.R. §1.137(b) to revive an application as having been abandoned due to unintentional delay.

The Office regrets the delay in addressing this matter, however, the instant petition was presented to the attorneys in the Office of Petitions only at this writing.[1]

For the reasons set forth below, the petition under 37 C.F.R. §1.137(b) is **GRANTED**.

BACKGROUND

The record indicates:

- Petitioner failed to reply timely and properly to the Restriction Requirement mailed on 26

[1] **NOTE: Monitoring of the status of applications on PAIR can inform one's management of application responses and provide an indication when mailings of Office actions should be expected. Status Inquiries filed at three (3) or four (4) month intervals provide a demonstration of diligence and attention in supporting a petition seeking relief under 37 C.F.R. §1.181.**

September, 2005, with reply due absent extension of time on or before Tuesday, 27 December, 2005;

- the instant application went abandoned by operation of law after midnight 26 December, 2005;
- the Office mailed a Notice of Abandonment on 5 April 2006;
- Petitioner filed the original petition on 3 May, 2006, *without* fee/authorization, and, *inter alia*, reply in the form of an election amendment–however, because Petitioner was not of record at the time the application went abandoned, Petitioner was not in a position to make such a statement as to the nature of the delay, and must obtain the statement of former Counsel (of record at the time of abandonment) and/or of Applicant(s)–and so the petition was dismissed on 19 June, 2006;
- the instant petition seeks to overcome these deficiencies with, *inter alia*, fee authorization and presentation of the statement of the averred representative of the assignee.

Petitioners always are reminded of the burden of those registered to practice *and* all others who make representations before the Office, *inter alia*, to inquire into the underlying facts of representations made to the Office.[2]

---

[2] See supplement of 17 June, 1999. The Patent and Trademark Office is relying on petitioner's duty of candor and good faith and accepting a statement made by Petitioner. See Changes to Patent Practice and Procedure, 62 Fed. Reg. at 53160 and 53178, 1203 Off. Gaz. Pat. Office at 88 and 103 (responses to comments 64 and 109)(applicant obligated under 37 C.F.R. §10.18 to inquire into the underlying facts and circumstances when providing statements to the Patent and Trademark Office).

Specifically, the regulations at 37 C.F.R. §10.18 provide:

§ 10.18 Signature and certificate for correspondence filed in the Patent and Trademark Office.
(a) For all documents filed in the Office in patent, trademark, and other non-patent matters, except for correspondence that is required to be signed by the applicant or party, each piece of correspondence filed by a practitioner in the Patent and Trademark Office must bear a signature by such practitioner complying with the provisions of §1.4(d), §1.4(e), or § 2.193(c)(1) of this chapter.
(b) By presenting to the Office (whether by signing, filing, submitting, or later advocating) any paper, the party presenting such paper, whether a practitioner or non-practitioner, is certifying that—

(1) All statements made therein of the party's own knowledge are true, all statements made therein on information and belief are believed to be true, and all statements made therein are made with the knowledge that whoever, in any matter within the jurisdiction of the Patent and Trademark Office, knowingly and willfully falsifies, conceals, or covers up by any trick, scheme, or device a material fact, or makes any false, fictitious or fraudulent statements or representations, or makes or uses any false writing or document knowing the same to contain any false, fictitious or fraudulent statement or entry, shall be subject to the penalties set forth under 18 U.S.C. 1001, and that violations of this paragraph may jeopardize the validity of the application or document, or the validity or enforceability of any patent, trademark registration, or certificate resulting therefrom; and

(2) To the best of the party's knowledge, information and belief, formed after an inquiry reasonable under the circumstances, that —

(i) The paper is not being presented for any improper purpose, such as to harass someone or to cause unnecessary delay or needless increase in the cost of prosecution before the Office;

(ii) The claims and other legal contentions therein are warranted by existing law or by a nonfrivolous argument for the extension, modification, or reversal of existing law or the establishment of new law;

(iii) The allegations and other factual contentions have evidentiary support or, if specifically so identified, are likely to have evidentiary support after a reasonable opportunity for further investigation or discovery; and

(iv) The denials of factual contentions are warranted on the evidence, or if specifically so identified, are reasonably based on a lack of information or belief.

STATUTES, REGULATIONS AND ANALYSIS

Congress has authorized the Commissioner to "revive an application if the delay is shown to the satisfaction of the Commissioner to have been "unavoidable." 35 U.S.C. §133 (1994).[3]

The regulations at 37 C.F.R. §1.137(a) and (b) set forth the requirements for a petitioner to revive a previously unavoidably or unintentionally, respectively, abandoned application under this congressional grant of authority. The language of 35 U.S.C. §133 and 37 C.F.R. §1.137(a) is clear, unambiguous, and without qualification: the delay in tendering the reply to the outstanding Office action, as well as filing the first petition seeking revival, must have been unavoidable for the reply now to be accepted on petition.[4]

Delays in responding properly raise the question whether delays are unavoidable.[5] Where there is a question whether the delay was unavoidable, Petitioners must meet the burden of establishing that the delay was unavoidable within the meaning of 35 U.S.C. §133 and 37 C.F.R. §1.137(a).[6] And the Petitioner must be diligent in attending to the matter.[7] Failure to do so does not constitute the care required under Pratt, and so cannot satisfy the test for diligence and due care.

(c) Violations of paragraph (b)(1) of this section by a practitioner or non-practitioner may jeopardize the validity of the application or document, or the validity or enforceability of any patent, trademark registration, or certificate resulting therefrom. Violations of any of paragraphs (b)(2)(i) through (iv) of this section are, after notice and reasonable opportunity to respond, subject to such sanctions as deemed appropriate by the Commissioner, or the Commissioner's designee, which may include, but are not limited to, any combination of—

(1) Holding certain facts to have been established;
(2) Returning papers;
(3) Precluding a party from filing a paper, or presenting or contesting an issue;
(4) Imposing a monetary sanction;
(5) Requiring a terminal disclaimer for the period of the delay; or
(6) Terminating the proceedings in the Patent and Trademark Office.

(d) Any practitioner violating the provisions of this section may also be subject to disciplinary action. See § 10.23(c)(15).
[Added 50 FR 5175, Feb. 6, 1985, effective Mar. 8, 1985; para. (a) revised, 58 FR 54494, Oct. 22, 1993, effective Nov. 22, 1993; paras. (a) & (b) revised, paras. (c) & (d) added, 62 FR 53131, Oct. 10, 1997, effective Dec. 1, 1997; para. (a) revised, 69 FR 56481, Sept. 21, 2004, effective Oct. 21, 2004]

[3] 35 U.S.C. §133 provides:
35 U.S.C. §133 Time for prosecuting application.
Upon failure of the applicant to prosecute the application within six months after any action therein, of which notice has been given or mailed to the applicant, or within such shorter time, not less than thirty days, as fixed by the Commissioner in such action, the application shall be regarded as abandoned by the parties thereto, unless it be shown to the satisfaction of the Commissioner that such delay was unavoidable.

[4] Therefore, by example, an unavoidable delay in the payment of the Filing Fee might occur if a reply is shipped by the US Postal Service, but due to catastrophic accident, the delivery is not made.

[5] See: *Changes to Patent Practice and Procedure*; *Final Rule Notice*, 62 *Fed. Reg.* at 53158-59 (October 10, 1997), 1203 *Off. Gaz. Pat. Office* at 86-87 (October 21, 1997).

[6] See: In re Application of G, 11 USPQ2d 1378, 1380 (Comm'r Pats. 1989).

[7] See: Diligence in Filing Petitions to Revive and Petitions to Withdraw the Holding of Abandonment, 1124 Off. Gaz. Pat. Office 33 (March 19, 1991). It was and is Petitioner's burden to exercise diligence in seeking either to have the holding of abandonment withdrawn or the application revived. See 1124 Off. Gaz. Pat. Office supra.

(By contrast, unintentional delays are those that do not satisfy the very strict statutory and regulatory requirements of unavoidable delay, and also, by definition, are not intentional.[8]))

Allegations as to
Unintentional Delay

The requirements for relief under the provisions of 37 C.F.R. §1.137(b) are: petition, fee, reply, showing of unintentional delay, and–where appropriate–a terminal disclaimer and fee

It appears that Petitioner has satisfied the requirements of the regulation.

CONCLUSION

The petition as considered under 37 C.F.R. §1.137(b) is **granted**.

The instant application is released to Technology Center 3600 for further processing in due course.

While telephone inquiries regarding this decision may be directed to the undersigned at (571) 272-3214, it is noted that all practice before the Office is in writing (see: 37 C.F.R. §1.2[9]) and the proper authority for action on any matter in this regard are the statutes (35 U.S.C.), regulations (37 C.F.R.) and the commentary on policy (MPEP). Therefore, no telephone discussion may be controlling or considered authority for Petitioner's action(s).

John J. Gillon, Jr.
Senior Attorney
Office of Petitions

---

[8] Therefore, by example, an unintentional delay in the reply might occur if the reply and transmittal form are to be prepared for shipment by the US Postal Service, but other pressing matters distract one's attention and the mail is not timely deposited for shipment.

[9] The regulations at 37 C.F.R. §1.2 provide:
§1.2 Business to be transacted in writing.
All business with the Patent and Trademark Office should be transacted in writing. The personal attendance of applicants or their attorneys or agents at the Patent and Trademark Office is unnecessary. The action of the Patent and Trademark Office will be based exclusively on the written record in the Office. No attention will be paid to any alleged oral promise, stipulation, or understanding in relation to which there is disagreement or doubt.

UNITED STATES PATENT AND TRADEMARK OFFICE

COMMISSIONER FOR PATENTS
UNITED STATES PATENT AND TRADEMARK OFFICE
P.O. BOX 1450
ALEXANDRIA, VA 22313-1450
WWW.USPTO.GOV

Paper No.

OBLON SPIVAK McCLELLAND
MAIER & NEUSTADT P.C.
1940 DUKE STREET
ALEXANDRIA, VA 22314

COPY MAILED

AUG 22 2003

OFFICE OF PETITIONS

In re Application of	:	
Jun Miyokawa et al	:	
Application No. 09/867,449	:	ON PETITION
Filed: May 31, 2001	:	
Attorney Docket No. 205469US8	:	

This is a decision on the petition under 37 CFR 1.137(b), filed August 14, 2003, to revive the above-identified application.

The petition is **GRANTED**.

The above-identified application became abandoned for failure to reply within the meaning of 37 CFR 1.113 in a timely manner to the final Office action mailed February 10, 2003, which set a shortened statutory period for reply of three (3) months. No extensions of time under the provisions of 37 CFR 1.136(a) were obtained. Accordingly, the above-identified application became abandoned on August 11, 2003.

Receipt is acknowledged of the currently filed amendment and the request for continued examination (RCE)

Telephone inquiries concerning this decision should be directed to Wan Laymon at (703) 305-9282.

Wan Laymon
Petitions Examiner
Office of Petitions
Office of the Deputy Commissioner
for Patent Examination Policy

UNITED STATES PATENT AND TRADEMARK OFFICE

Commissioner for Patents
United States Patent and Trademark Office
P.O. Box 1450
Alexandria, VA 22313-1450
www.uspto.gov

COPY MAILED
MAY 12 2006
OFFICE OF PETITIONS

FITZPATRICK, CELLA, HARPER & SCINTO
30 ROCKEFELLER PLAZA
NEW YORK, NY 10112-2200

In re Patent No. 6,985,255	:	
SAITO	:	DECISION ON REQUEST
Issue Date: January 10, 2006	:	FOR RECONSIDERATION OF
Application No. 09/867,472	:	PATENT TERM ADJUSTMENT
Filed: May 31, 2001	:	and
Atty Docket No. 00862.022249	:	NOTICE OF INTENT TO ISSUE
	:	CERTIFICATE OF CORRECTION
	:	

This is a decision on the "REQUEST FOR RECONSIDERATION OF PATENT TERM ADJUSTMENT UNDER 37 C.F.R. § 1.705(d)" filed March 10, 2006. Patentees request that the Patent Term Adjustment for the above-identified patent be set at 913 days.

The request for reconsideration of the patent term adjustment indicated in the patent is **GRANTED**.

The patent term adjustment indicated in the patent is to be corrected by issuance of a certificate of correction showing a revised Patent Term Adjustment of nine hundred thirteen (913) days.

On January 10, 2006, the above-identified application matured into U.S. Patent No. 6,985,255. The instant request for reconsideration filed March 10, 2006 was timely filed within 2 months of the date the patent issued. See § 1.705(d). The Patent issued with a revised Patent Term Adjustment of 854 days. Patentees contend that there were no circumstances within this case history that constitute a failure by the Patentees to engage in reasonable efforts to conclude processing or examination of the above-identified application as set forth in 37 CFR § 1.704. In essence, Patentees' dispute the sole reduction of record, one for 59 days associated with the filing

of an information disclosure statement (IDS) received in the Office on August 22, 2005. Patentees state that the paper filed with the response to the notice of allowance was a second request for acknowledgement of consideration of previously cited prior art, and thus, no reduction is warranted.

In essence, Patentees contend that this Request for Acknowledgement of Consideration of Previously Cited Prior Art is an example of a submission after a Notice of Allowance that are not considered a failure to engage in reasonable efforts to conclude processing or examination of an application, in accordance with the "Clarification of 37 C.F.R. §1.704(c)(10) - Reduction of Patent Term Adjustment for Certain Types of Papers Filed After a Notice of Allowance Has Been Mailed," 1247 OG 111 (June 27, 2001).

Patentees' contention is well taken. The OG Notice states that:

> … the Office is publishing this notice to provide guidance in interpreting the provisions of 37 CFR 1.704(c)(10) to clarify that submission of certain papers after a "Notice of Allowance," which do not cause substantial interference and delay in the patent issue process, are not considered a "failure to engage in reasonable efforts" to conclude processing or examination of an application. The following are examples of such papers: (1) Issue Fee Transmittal (PTOL-85B), (2) Power of Attorney, (3) Power to Inspect, (4) Change of Address, (5) Change of Status (small/not small entity status), (6) a response to the examiner's reasons for allowance, and (7) letters related to government interests (e.g., those between NASA and the Office). Therefore, the submission of these papers after a Notice of Allowance will not be considered a "failure to engage in reasonable efforts" to conclude processing or examination of an application and would not result in reduction of a patent term adjustment pursuant to 37 CFR 1.704(c)(10).

A Request for Acknowledgment of Consideration of Previously Cited Art is not among those examples. Example (6) refers to a Comment on the Examiner's Reasons for Allowance and does not encompass the instant papers.

Nonetheless, it is concluded that under the circumstances the filing of the Request for Acknowledgement of Consideration of

Previously Cited Prior Art for Priority Acknowledgment should not be considered "a failure to engage in reasonable efforts" to conclude processing or examination of an application and should not result in reduction of the patent term adjustment pursuant to 37 CFR 1.704(c)(10). Patentees have shown that an IDS citing seven references was originally submitted on March 22, 2004, as evidenced by a stamped postcard receipt. However as stated by the patentees, the non-final Office Action mailed February 24, 2005 did not attach an initialled copy of the IDS, indicating consideration of the references cited the IDS. In response to the non-final Office Action, the Remarks section of the Amendment filed on June 21, 2005 requested an initialled copy of the IDS, indicating that the references cited on the IDS had been considered. The Notice of Allowability mailed July 29, 2005 did not attach the requested initialled copy of the IDS. The Request for Acknowledgement of Consideration of Previously Cited Prior Art for Priority Acknowledgment filed on August 22, 2005 was, therefore, a second request for acknowledgement and should not be considered a failure to engage in reasonable efforts to conclude processing or examination of an application. The request filed on August 22, 2005 should also not be considered a §1.704(c)(10) paper because it is a copy of the previously filed IDS. Thus, it is concluded that the reductions totalling 59 days are not warranted.

In view thereof, the patent term adjustment indicated on the patent should be nine hundred thirteen (913) days.

The Office acknowledges submission of the $200.00 fee set forth in 37 CFR 1.18(e). No additional fees are required.

The application file is being forwarded to the Certificates of Correction Branch for issuance of a certificate of correction in order to rectify this error. The Office will issue a certificate of correction indicating that the term of the above-identified patent is extended or adjusted by NINE HUNDRED THIRTEEN (913) days.

Telephone inquiries specific to this matter should be directed to Denise Pothier at (571) 272-4787.

Nancy Johnson
Senior Petitions Attorney
Office of Petitions

Enclosure: Copy of DRAFT Certificate of Correction

UNITED STATES PATENT AND TRADEMARK OFFICE

CERTIFICATE OF CORRECTION

PATENT : 6,985,255 B1

DATED : January 10, 2006

INVENTOR(S) : Toshiaki Saito

It is certified that error appears in the above-identified patent and that said Letters Patent is hereby corrected as shown below:

On the cover page,

[*] Notice: Subject to any disclaimer, the term of this patent is extended or adjusted under 35 USC 154(b) by 854 days

Delete the phrase "by 854 days" and insert – by 913 days--

UNITED STATES PATENT AND TRADEMARK OFFICE

Commissioner for Patents
United States Patent and Trademark Office
P.O. Box 1450
Alexandria, VA 22313-1450
www.uspto.gov

EMPK & SHILOH, LLP
116 JOHN ST.
SUITE 1201
NEW YORK NY 10038

COPY MAILED
AUG 1 8 2008
OFFICE OF PETITIONS

In re Application of :
Iny :
Patent No. 7,095,744 :
Issued: 22 August, 2006 :
Application No. 09/867,506 :
Filed: 30 May, 2001 :
Attorney Docket No. 1964PR/P-7823-US/ :
P-9633-US/

NOTICE

This is in response to the paper filed 24 January, 2007, under 37 C.F.R. §1.27(g)(2) requesting that status as a Small Entity be removed.

The Office regrets the delay in addressing this matter, however, the instant petition was presented to the attorneys in the Office of Petitions only at this writing.

> **NOTE**: It appears that the address on the petition (as set forth below this decision) is not the address of record (as set forth above). If Petitioner desires to receive future correspondence regarding this application, the appropriate Notice of Change of Address must be submitted. A courtesy copy of this decision will be mailed to Petitioner. However, all future correspondence will be directed to the address of record until such time as appropriate instructions are received to the contrary.

In accordance with the request, status as a Small Entity will be removed, and Petitioner is required to pay fees at the schedule set forth for not-small entities.

> **NOTE**: Petitioner is reminded that the regulations require that Petitioner file for each application/patent an accounting effective the actual date of loss of status, specifying the date(s), the amount(s) paid, amount(s) actually due, and the difference(s) due and

payable. (*See*: the regulations at 37 C.F.R. §1.28,[1] and in particular at 37 C.F.R. §1.28(c)(2)(ii)—with the penalty provisions at 37 C.F.R. §1.28(c)(3).)

Out of an abundance of caution, Petitioners always are reminded that that those registered to practice and all others who make representations before the Office are reminded to inquire into the underlying facts of representations made to the Office and support averments with the appropriate documentation–since all owe to the Office the continuing duty to disclose.[2]

---

[1] The regulations at 37 C.F.R. §1.28 provide:

§ 1.28 Refunds when small entity status is later established; how errors in small entity status are excused.

(a)*Refunds based on later establishment of small entity status.* A refund pursuant to § 1.26, based on establishment of small entity status, of a portion of fees timely paid in full prior to establishing status as a small entity may only be obtained if an assertion under § 1.27(c) and a request for a refund of the excess amount are filed within three months of the date of the timely payment of the full fee. The three-month time period is not extendable under § 1.136. Status as a small entity is waived for any fee by the failure to establish the status prior to paying, at the time of paying, or within three months of the date of payment of, the full fee.

(b)*Date of payment.*

(1)The three-month period for requesting a refund, pursuant to paragraph (a) of this section, starts on the date that a full fee has been paid;

(2)The date when a deficiency payment is paid in full determines the amount of deficiency that is due, pursuant to paragraph (c) of this section.

(c)*How errors in small entity status are excused.* If status as a small entity is established in good faith, and fees as a small entity are paid in good faith, in any application or patent, and it is later discovered that such status as a small entity was established in error, or that through error the Office was not notified of a loss of entitlement to small entity status as required by § 1.27(g)(2), the error will be excused upon: compliance with the separate submission and itemization requirements of paragraphs (c)(1) and (c)(2) of this section, and the deficiency payment requirement of paragraph (c)(2) of this section:

(1)*Separate submission required for each application or patent.* Any paper submitted under this paragraph must be limited to the deficiency payment (all fees paid in error), required by paragraph (c)(2) of this section, for one application or one patent. Where more than one application or patent is involved, separate submissions of deficiency payments (*e.g.*, checks) and itemizations are required for each application or patent. See § 1.4(b).

(2)*Payment of deficiency owed.* The deficiency owed, resulting from the previous erroneous payment of small entity fees, must be paid.

(i)*Calculation of the deficiency owed.* The deficiency owed for each previous fee erroneously paid as a small entity is the difference between the current fee amount (for other than a small entity) on the date the deficiency is paid in full and the amount of the previous erroneous (small entity) fee payment. The total deficiency payment owed is the sum of the individual deficiency owed amounts for each fee amount previously erroneously paid as a small entity. Where a fee paid in error as a small entity was subject to a fee decrease between the time the fee was paid in error and the time the deficiency is paid in full, the deficiency owed is equal to the amount (previously) paid in error;

(ii)*Itemization of the deficiency payment.* An itemization of the total deficiency payment is required. The itemization must include the following information:

(A)Each particular type of fee that was erroneously paid as a small entity, (*e.g.*, basic statutory filing fee, two-month extension of time fee) along with the current fee amount for a non-small entity;

(B)The small entity fee actually paid, and when. This will permit the Office to differentiate, for example, between two one-month extension of time fees erroneously paid as a small entity but on different dates;

(C)The deficiency owed amount (for each fee erroneously paid); and

(D)The total deficiency payment owed, which is the sum or total of the individual deficiency owed amounts set forth in paragraph (c)(2)(ii)(C) of this section.

(3)*Failure to comply with requirements.* If the requirements of paragraphs (c)(1) and (c)(2) of this section are not complied with, such failure will either: be treated as an authorization for the Office to process the deficiency payment and charge the processing fee set forth in § 1.17(i), or result in a requirement for compliance within a one-month non-extendable time period under § 1.136(a) to avoid the return of the fee deficiency paper, at the option of the Office.

(d)*Payment of deficiency operates as notification of loss of status.* Any deficiency payment (based on a previous erroneous payment of a small entity fee) submitted under paragraph (c) of this section will be treated under § 1.27(g)(2) as a notification of a loss of entitlement to small entity status.

[2] See supplement of 17 June, 1999. The Patent and Trademark Office is relying on Petitioner's duty of candor and good faith and accepting a statement made by Petitioner. See Changes to Patent Practice and Procedure, 62 Fed. Reg. at 53160 and 53178, 1203 Off. Gaz. Pat. Office at 88 and 103 (responses to comments 64 and 109)(applicant obligated under 37 C.F.R. §10.18 to inquire into the underlying facts and circumstances when providing statements to the Patent and Trademark Office).

Patent No. 7,095,744
Application No. 09/867,506

The availability of applications and application papers online to applicants/practitioners who diligently associate their Customer Number with the respective application(s) now provides an applicant/practitioner on-demand information as to events/transactions in an application.

This file is being returned to IFW Files Repository.

While telephone inquiries regarding this decision may be directed to the undersigned at (571) 272-3214, it is noted that all practice before the Office is in writing (see: 37 C.F.R. §1.2[3]) and the proper authority for action on any matter in this regard are the statutes (35 U.S.C.), regulations (37 C.F.R.) and the commentary on policy (MPEP). Therefore, no telephone discussion may be controlling or considered authority for Petitioner's action(s).

/John J. Gillon, Jr./
John J. Gillon, Jr.
Senior Attorney
Office of Petitions

cc:
EITAN LAW GROUP
C/O LANDON IP INC.
1700 DIAGONAL ROAD
ALEXANDRIA, VA 22314

[3] The regulations at 37 C.F.R. §1.2 provide:
§1.2 Business to be transacted in writing.
All business with the Patent and Trademark Office should be transacted in writing. The personal attendance of applicants or their attorneys or agents at the Patent and Trademark Office is unnecessary. The action of the Patent and Trademark Office will be based exclusively on the written record in the Office. No attention will be paid to any alleged oral promise, stipulation, or understanding in relation to which there is disagreement or doubt.

UNITED STATES PATENT AND TRADEMARK OFFICE

Commissioner for Patents
United States Patent and Trademark Office
P.O. Box 1450
Alexandria, VA 22313-145

JUL - 5 2005

ANTONELLI, TERRY, STOUT & KRAUS, LLP
1300 North Seventeenth Street
Suite 1800
Arlington, VA 22209-3873

In re application of
Bill Kitchen et al. :
Application No. 09/867,587 :
Filed: May 31, 2001 :
For: BILL AVAILABILITY NOTIFICATION AND BILLING INFORMATION REQUEST :

DECISION ON REQUEST FOR WITHDRAWAL OF ATTORNEY

This is a decision on the request filed on June 16, 2005, under 37 CFR 1.36 and MPEP 402.06, requesting permission to withdraw as the attorney of record in the above-identified application.

The request is **NOT APPROVED**

Under 37 CFR 1.36 an attorney may withdraw only upon application to and approval by the Commissioner. It should be noted that a withdrawal is effective when approved, not when filed. Besides giving due notice to his or her client and delivering to the client all papers and property to which the client is entitled as specified under 37 CFR 10.40, approval of such a request requires that the following conditions be met:

A) Each attorney of record must sign the notice of withdrawal, or the notice must contain a clear indication of one attorney signing on behalf of another, because the Office does not recognize law firms;

B) A proper reason for the withdrawal as enumerated in 37 CFR 10.40(b) or subsection (1)-(6) of 37 CFR 10.40(c) must be provided; and

C) If withdrawal is requested in accordance with 37 CFR 10.40(c) above, there must be at least 30 days between approval of the withdrawal and the later of the expiration date of a time period for reply or the expiration date of the period which can be obtained by a petition and fee for extension of time under 37 CFR 1.136(a).

The request to withdraw as attorney in the above-identified application is not approved because the request does not comply with Items A) and B).

As to Item A), the attorneys listed in the request (Customer Number 20457) do not correspond with those named in the Power of Attorney in the declaration, thereby creating confusion as to who is withdrawing. The original Power of Attorney appointed several attorneys. Of these attorneys, Thomas E. Anderson, and Richard J. Stokey are not associated with Customer No. 20457 nor are they included in the list of withdrawing attorneys. The reference to a customer number appears to not include all the attorneys of record. If less than all the attorneys wish to withdraw and a portion of the originally listed attorneys wish to retain power, any renewed request must so state, otherwise the person signing must be signing on behalf of all the attorneys of record.

As to Item B), while a reason may be provided by referencing a specific portion of 37 CFR 10.40, the reason must deal with actions by the client. In this case, there is nothing in the file record that indicates the existence of an assignee or that the assignee is the client. Absent a 3.73(b) statement, the "client" referred to in 37 CFR 10.40 is seen as being those individuals who conferred power upon the attorneys, in this case the inventors.

Steven N. Meyers
Special Programs Examiner
Patent Technology Center 3600
(571) 272-6611

SNM/pav: 06/27/05

UNITED STATES PATENT AND TRADEMARK OFFICE

COMMISSIONER FOR PATENTS
UNITED STATES PATENT AND TRADEMARK OFFICE
P.O. BOX 1450
ALEXANDRIA, VA 22313-1450
www.uspto.go

SUTHERLAND ASBILL & BRENNAN LLP
999 PEACHTREE STREET, N.E.
ATLANTA, GA 30309

COPY MAILED

AUG 28 2006

OFFICE OF PETITIONS

In re Application of	:	
Kitchen et al.	:	DECISION GRANTING
Application No. 09/867,587	:	STATUS UNDER
Filed: May 31, 2001	:	37 CFR 1.47
For: BILL AVAILABILITY NOTIFICATION:		
AND BILLING INFORMATION REQUEST	:	

This is in response to a "Petition Under 47(a)", filed July 16, 2001, to allow the other inventor(s) to proceed with the application on behalf of himself or herself and the nonsigning inventor. The petition is properly treated under 37 CFR 1.47(a). The delay in treating this petition is regretted.

The petition is **granted**.

The above-identified application and papers have been reviewed and found in compliance with 37 CFR 1.47(a). This application is hereby accorded Rule 1.47(a) status.

Petitioner has shown that the non-signing inventors, Clarence M. Bringardner and Kenneth W. Bradley III, refuse to join in the application.

As provided in Rule 1.47(a), this Office will forward notice of this application's filing to the non-signing inventor at the addresses given in the Petition. Notice of the filing of this application will also be published in the Official Gazette.

The application file is being referred to the Office of Initial Patent Examination for continued processing.

Telephone inquiries related to this decision may be directed to the undersigned at (571) 272-3232.

Derek L. Woods
Attorney
Office of Petitions

UNITED STATES PATENT AND TRADEMARK OFFICE

COMMISSIONER FOR PATENTS
UNITED STATES PATENT AND TRADEMARK OFFICE
P.O. BOX 1450
ALEXANDRIA, VA 22313-1450
www.uspto.gov

MR. KENNETH W. BRADLEY, III
8202 OLDE RICHMOND LANE
WESTERVILLE, OH 43081

COPY MAILED

AUG 28 2006

OFFICE OF PETITIONS

In re Application of :
Kitchen et al. : LETTER
Application No. 09/867,587 :
Filed: May 31, 2001 :
For: BILL AVAILABILITY NOTIFICATION:
AND BILLING INFORMATION REQUEST :

Dear Mr. Bradley, III:

You are named as a joint inventor in the above-identified United States patent application filed under the provisions of 35 U.S.C. 116 (United States Code) and 37 CFR 1.47(a), Rules of Practice in Patent Cases. Should a patent be granted on the application you will be designated therein as a joint inventor.

As a named inventor you are entitled to inspect any paper in the file wrapper of the application, order copies of all or any part thereof (at a prepaid cost per 37 CFR 1.19) or make your position of record in the application. Alternatively, you may arrange to do any of the preceding through a registered patent attorney or agent presenting written authorization from you. If you care to join the application, counsel of record (see below) would presumably assist you. Joining in the application would entail the filing of an appropriate oath or declaration by you pursuant to 37 CFR 1.63.

Telephone inquiries regarding this communication should be directed to the undersigned at (703) 305-0014. Requests for information regarding your application should be directed to the File Information Unit at (703) 308-2733. Information regarding how to pay for and order a copy of the application, or a specific paper in the application, should be directed to Certification Division at (703) 308-9726 or 1-800-972-6382 (outside the Washington D.C. area).

Derek L. Woods
Attorney
Office of Petitions

cc: SUTHERLAND ASBILL & BRENNAN LLP
999 PEACHTREE STREET, N.E.
ATLANTA, GA 30309

UNITED STATES PATENT AND TRADEMARK OFFICE

COMMISSIONER FOR PATENTS
UNITED STATES PATENT AND TRADEMARK OFFICE
P.O. BOX 1450
ALEXANDRIA, VA 22313-1450
www.uspto.gov

MR. CLARENCE M. BRINGARDNER
2995 DRESDEN STREET
COLUMBUS, OH 43224

COPY MAILED

AUG 28 2006

OFFICE OF PETITIONS

In re Application of :
Kitchen et al. : LETTER
Application No. 09/867,587 :
Filed: May 31, 2001 :
For: BILL AVAILABILITY NOTIFICATION:
AND BILLING INFORMATION REQUEST :

Dear Mr. Bringardner:

You are named as a joint inventor in the above-identified United States patent application filed under the provisions of 35 U.S.C. 116 (United States Code) and 37 CFR 1.47(a), Rules of Practice in Patent Cases. Should a patent be granted on the application you will be designated therein as a joint inventor.

As a named inventor you are entitled to inspect any paper in the file wrapper of the application, order copies of all or any part thereof (at a prepaid cost per 37 CFR 1.19) or make your position of record in the application. Alternatively, you may arrange to do any of the preceding through a registered patent attorney or agent presenting written authorization from you. If you care to join the application, counsel of record (see below) would presumably assist you. Joining in the application would entail the filing of an appropriate oath or declaration by you pursuant to 37 CFR 1.63.

Telephone inquiries regarding this communication should be directed to the undersigned at (703) 305-0014. Requests for information regarding your application should be directed to the File Information Unit at (703) 308-2733. Information regarding how to pay for and order a copy of the application, or a specific paper in the application, should be directed to Certification Division at (703) 308-9726 or 1-800-972-6382 (outside the Washington D.C. area).

Derek L. Woods
Attorney
Office of Petitions

cc: SUTHERLAND ASBILL & BRENNAN LLP
999 PEACHTREE STREET, N.E.
ATLANTA, GA 30309

UNITED STATES PATENT AND TRADEMARK OFFICE

Commissioner for Patents
United States Patent and Trademark Office
P.O. Box 1450
Alexandria, VA 22313-1450
www.uspto.gov

ALFRED A. STADNICKI
FIFTH FLOOR
1146 NINETEENTH STREET, NW
WASHINGTON, DC 20036

COPY MAILED

SEP 07 2006

OFFICE OF PETITIONS

In re Application of	:	
Bill Kitchen et al	:	
Application No. 09/867,588	:	DECISION ON PETITION
Filed: May 31, 2001	:	TO WITHDRAW
Attorney Docket No. 3350-05K	:	FROM RECORD
	:	

This is a decision on the Request to Withdraw as attorney or agent of record under 37 C.F.R. § 1.36(b), filed June 24, 2005.

The request is **NOT APPROVED**.

A grantable request to withdraw as attorney/agent of record must be signed by every attorney/agent seeking to withdraw or contain a clear indication that one attorney is signing on behalf of another/others. A request to withdraw will not be approved unless at least 30 (thirty) days would remain between the date of approval and the later of the expiration date of a time to file a response or the expiration date of the maximum time period which can be extended under 37 C.F.R. § 1.136(a).

The Office cannot approve the request at this time since the reasons provided do not meet any of the conditions under the mandatory or permissive categories enumerated in 37 CFR 10.40. Section 10.40 of Title 37 of the Code of Federal Regulation states, "[a] practitioner shall not withdraw from employment in a proceeding before the Office without permission from the Office[.]" More specifically, 37 CFR 10.40 states, "[i]f paragraph (b) of this section is not applicable, a practitioner may not request permission to withdraw in matter pending before the Office unless such request or such withdrawal is" for one the permissive reasons listed in 37 CFR 10.40(c). The reason set forth in the request does not appear to meet any of the conditions set forth in 37 CFR 10.40.

The Power of Attorney submitted July 20, 2005 is not accepted. In order for an assignee to take action in a case before the Office, compliance with 37 CFR 3.73(b) must be satisfied. More specifically, 37 CFR 3.73(b) provides that: (1) when an assignee seeks to take action in a matter before the Office, the assignee must establish its ownership of the property to the satisfaction of

the Commissioner; (2) ownership is established by submitting to the Office, in the Office file related to the matter in which action is sought to be taken, documentary evidence of a chain of title from the original owner to the assignee (*e.g.,* copy of an executed assignment submitted for recording) or by specifying (*e.g.,* reel and frame number) where such evidence is recorded in the Office; (3) the submission establishing ownership must be signed by a party authorized to act on behalf of the assignee; and (4) documents submitted to establish ownership may be required to be recorded as a condition to permitting the assignee to take action in a matter pending before the Office. A form for complying with the provisions of 37 C.F.R. 3.73(b) may be found on the USPTO.gov website (Form No. PTO/SB/96).

All future communications from the Office will continue to be directed to the above-listed address until otherwise notified by applicant.

Telephone inquiries concerning this decision should be directed to Irvin Dingle at 571-272-3210.

David Bucci
Petitions Examiner
Office of Petitions

cc: William R. Silverio
Sutherland Asbill & Brennan LLP
999 Peachtree Street, N.E.
Atlanta, GA 30309-3996

cc: Mr. Hans Dreyer
Director, Intellectual Property
CheckFree Corporation
6000 Perimeter Drive
Dublin, OH 43017-3233

UNITED STATES PATENT AND TRADEMARK OFFICE

Commissioner for Patents
United States Patent and Trademark Office
P.O. Box 1450
Alexandria, VA 22313-1450
www.uspto.gov

ANTONELLI, TERRY, STOUT & KRAUS, LLP
1300 NORTH SEVENTEENTH STREET
SUITE 1800
ARLINGTON, VA 22209

COPY MAILED

MAR 07 2006

OFFICE OF PETITIONS

In re Application of	:	
Hogan, Lawrence Daniel	:	DECISION ON PETITION
Application No. 09/867,589	:	TO WITHDRAW
Filed: May 31, 2001	:	FROM RECORD
Title: ELECTRONIC BILL AND NON-BILL INFORMATION PRESENTATION	:	

This is a decision on the request to withdraw as attorney of record under 37 C.F.R. § 1.36, filed June 27, 2005.

The request is **NOT APPROVED**.

On August 8, 2005, a Revocation of Power of Attorney was submitted. Unlike a Request for Withdrawal as Attorney, a Revocation of the Power of Attorney becomes effective on the date that the revocation is *received* in the Office, not on the date of *acceptance*. In view of the submission, the instant request is moot and not approved.

The correspondence address of record has been changed to the address listed below.

Telephone inquires concerning this decision should be directed to Petitions Examiner Liana Chase at (571) 272-3206. All other inquiries should be directed to the Technology Center.

David Bucci
Petitions Examiner
Office of Petitions

Cc: SUTHERLAND ASBILL & BRENNAN LLP
999 PEACHTREE STREET, N.E.
ATLANTA GA 30309

UNITED STATES PATENT AND TRADEMARK OFFICE

COMMISSIONER FOR PATENTS
UNITED STATES PATENT AND TRADEMARK OFFICE
WASHINGTON, D.C. 20231
www.uspto.gov

Paper No. 6

Finnegan, Henderson, Farabow, Garrett, & Dunner, L.L.P.
1300 I Street, N. W.
Washington, D. C. 20005-3315

COPY MAILED

JAN 07 2002

OFFICE OF PETITIONS

In re Application of
Sijacic, *et al.*
Application No. 09/867,650
Filed: May 31, 2001
Attorney Docket No. 06502.0338-00000

DECISION REFUSING STATUS
UNDER 37 C.F.R. §1.47(a)

This is in response to the November 30, 2001 petition under 37 C.F.R. §1.47(a).

HISTORY

Applicant filed the above-identified application on May 31, 2001, naming Michael Sijacic, Michael Chmielewski, Edwin Khodabachian, and Albert Tam as joint inventors. However, the declaration required by 37 C.F.R. §1.53 was missing. Accordingly, on July 30, 2001, the Office of Initial Patent Examination (hereinafter "OIPE") mailed a notice to file missing parts (hereinafter "the notice") to the address of record. The notice set a two month deadline for responding, running from the mail date of the notice.

Petitioner filed his response to the notice (which included a petition for a two month extension of time) on November 30, 2001.

LAW

§ 1.47 Filing when an inventor refuses to sign or cannot be reached.

> (a) If a joint inventor refuses to join in an application for patent or cannot be found or reached after diligent effort, the application may be made by the other inventor on behalf of himself or herself and the nonsigning inventor. The oath or declaration in such an application must be accompanied by a petition including proof of the pertinent facts, the fee set forth in §1.17(l) and the last known address of the nonsigning inventor. The Patent and Trademark Office shall, except in a continued prosecution application under §1.53(d), forward notice of the filing of the application to the nonsigning inventor at said address and publish notice of the filing of the application in the Official Gazette. The nonsigning inventor may subsequently join in the application on filing an oath or declaration complying with §1.63.

ANALYSIS

As can be seen from the rule as reproduced above, rule 47 status cannot be granted unless the petition is also accompanied by a declaration. In order to be valid, a declaration must identify the country or citizenship of each inventor.[1] While this petition is accompanied by the required declaration, the declaration does not identify the country or citizenship of the nonsigning inventors.

Accordingly, *this petition is* ***dismissed***.

---

[1] 37 C.F.R. §1.63(a)(3)

It is also noted that the post office addresses of the nonsigning inventors as noted on the declaration do not match the last known addresses as given in the petition. Clarification of these inventors' proper addresses is also requested.

CONCLUSION

Any request for reconsideration of this decision must be submitted within TWO (2) MONTHS from the mail date of this decision. Extensions of time under 37 C.F.R. §1.136(a) are permitted. The reconsideration request should include a cover letter entitled "Renewed Petition under 37 C.F.R. §1.47(a)".

Further correspondence with respect to this matter should be addressed as follows:

By mail:	Assistant Commissioner for Patents Box DAC Washington, D.C. 20231
By FAX:	(703) 308-6916 Attn: Special Program Law Office
By hand:	Crystal Plaza Four, Suite 3C23 2201 S. Clark Place Arlington, VA

Telephone inquiries regarding this decision should be directed to the undersigned at (703) 305-5593

Scott M. Ledford
Petitions Attorney
Office of Petitions
Office of the Deputy Commissioner
for Patent Examination Policy

UNITED STATES PATENT AND TRADEMARK OFFICE

COMMISSIONER FOR PATENTS
UNITED STATES PATENT AND TRADEMARK OFFICE
WASHINGTON, D.C. 20231
www.uspto.gov

Paper No. 10

FINNEGAN, HENDERSON, FARABOW, GARRETT
& DUNNER LLP
1300 I STREET, NW
WASHINGTON DC 20006

COPY MAILED

JAN 30 2003

OFFICE OF PETITIONS

In re Application of
SIJACIC et al.
Application No. 09/867,650
Filed: May 31, 2001
Attorney Docket No.
06502.0338-00000

DECISION ON PETITION AND NOTING JOINDER OF INVENTOR

This is in response to the renewed petition under 37 CFR 1.47(a) filed on March 26, 2002. Petitioners obtained a one-month extension of time, and thus, the petition is timely. The above-identified application file was recently forwarded to the Office of Petitions for a decision on the present petition. The Office apologizes for any inconvenience.

In view of the joinder of the inventors, further consideration under 37 CFR 1.47(a) is not necessary and such a petition is moot.

Accordingly, the petition is dismissed as moot.

This application does not have any Rule 1.47(a) status and no such status should appear on the file wrapper. This application need not be returned to this Office for further consideration under 37 CFR 1.47(a).

The second petition fee is not necessary. Therefore, the duplicate petition fee of $130.00 will be credited to Deposit Account No. 06-0916

This file is being returned to the Office of Initial Patent Examination for further processing of the application.

Telephone inquiries should be directed to the undersigned at (703) 306-5589.

Christina Tartera Donnell

Christina Tartera Donnell
Senior Petitions Attorney
Office of Petitions

UNITED STATES PATENT & TRADEMARK OFFICE
Washingt n, D.C. 20231

BEST AVAILABLE COPY

REQUEST FOR PATENT FEE REFUND

1 Date of Request: 01/29/03

2 S rial/Patent # 09/867,650

	3 Please refund the following fee(s):	4 PAPER NUMBER	5 DATE FILED	6 AMOUNT
	Filing			$
	Amendment			$
	Extension of Time			$
	Notice of Appeal/Appeal			$
X	Petition	7	3/26/02	$ 130
	Issue			$
	Cert of Correction/Terminal Disc.			$
	Maintenance			$
	Assignment			$
	Other			$

7 TOTAL AMOUNT OF REFUND $ 130

8 TO BE REFUNDED BY:

	Treasury Check
X	Credit Deposit A/C #:

9 06--0916

10 REASON:

	Overpayment
X	Duplicate Payment
	No Fee Due (Explanation):

11 REFUND REQUESTED BY: C. Donnell

TYPED/PRINTED NAME: C.T. Donnell TITLE: Pat. Atty

SIGNATURE: C. T. Donnell PHONE: 306-5589

OFFICE: 4700

****

THIS SPACE RESERVED FOR FINANCE USE ONLY:

APPROVED: Han Le DATE: 1/30/03

Instructions for completion of this form appear on the back. After completion, attach white and yellow copies to the official file and mail or hand-carry to:

Office f Finance
Refund Branch
Crystal Park One, Room 802B

FORM PTO 1577
(01/90)

UNITED STATES PATENT AND TRADEMARK OFFICE

Commissioner for Patents
United States Patent and Trademark Office
P.O. Box 1450
Alexandria, VA 22313-1450
www.uspto.gov

Scott Boalick
USPTO
600 Dulany Street
Alexandria, VA 22313

COPY MAILED

AUG 28 2007

OFFICE OF PETITIONS

In re Application of	:	
Robert M. Cooper	:	DECISION ON PETITION
Application No. 09/867,692	:	TO WITHDRAW
Filed: May 31, 2001	:	FROM RECORD
Attorney Docket No. 06975-165001 / AOLTV 14	:	

This is a decision on the Request to Withdraw as attorney or agent of record under 37 C.F.R. § 1.36(b), filed April 2, 2007.

The request is **APPROVED**.

A grantable request to withdraw as attorney/agent of record must be signed by every attorney/agent seeking to withdraw or contain a clear indication that one attorney is signing on behalf of another/others. A request to withdraw will not be approved unless at least 30 (thirty) days would remain between the date of approval and the later of the expiration date of a time to file a response or the expiration date of the maximum time period which can be extended under 37 C.F.R. § 1.136(a).

The request was signed by Scott Boalick. Scott Boalick has been withdrawn as attorney or agent of record; all other attorneys remain of record.

The correspondence address of record remains unchanged.

There is an outstanding Office action mailed June 28, 2007 that requires a reply from the applicant.

Telephone inquiries concerning this decision should be directed to Terri Williams at 571-272-2991.

T. Williams

Terri Williams
Petitions Examiner
Office of Petitions

cc: **FISH & RICHARDSON P.C.**
P.O. BOX 1022
MINNEAPOLIS MN 55440-1022

UNITED STATES PATENT AND TRADEMARK OFFICE

COMMISSIONER FOR PATENTS
UNITED STATES PATENT AND TRADEMARK OFFICE
WASHINGTON, D.C. 20231
www.uspto.gov

Paper No. 7

BANNER & WITCOFF, LTD.
1001 G STREET, N.W.
WASHINGTON, DC 20001

COPY MAILED

DEC 0 3 2001

OFFICE OF PETITIONS

In re Application of.	:
Mark J. Cooper et al.	:
Application No. 09/867,693	: DECISION GRANTING
Filed: May 31, 2001	:STATUS UNDER 37 CFR 1.47(a)
For: LYOPHILIZABLE AND ENHANCED	:
COMPACTED NUCLEIC ACIDS	:

This is in response to the petition under 37 CFR 1.47(a), filed November 13, 2001.

The petition is granted.

Petitioner has shown that the non-signing inventor has refused to join in the filing of the above-identified application.

The above-identified application and papers have been reviewed and found in compliance with 37 CFR 1.47(a). This application is hereby accorded Rule 1.47(a) status. As provided in Rule 1.47(c), this Office will forward notice of this application's filing to the non-signing inventor at the address given in the petition. Notice of the filing of this application will also be published in the Official Gazette.

Telephone inquiries regarding this decision should be directed to Irvin Dingle at (703) 306-5684.

This application is being forwarded to Technology Center 1600.

Frances Hicks

Frances Hicks
Lead Petitions Examiner
Office of Petitions
Office of the Deputy Commissioner
for Patent Examination Policy

UNITED STATES PATENT AND TRADEMARK OFFICE

COMMISSIONER FOR PATENTS
UNITED STATES PATENT AND TRADEMARK OFFICE
WASHINGTON, D.C. 20231
www.uspto.gov

Paper No. 8

MAUREEN COSTELLO
102 NORTH MANSFIELD AVENUE
MARGATE CITY, NJ 08402

COPY MAILED

DEC 0 3 2001

OFFICE OF PETITIONS

In re Application of
Mark J. Cooper; Murali K. Pasumarthy; Tomasz H. Kowalczyk; Maureen Costello
Application No. 09/867,693
Filed: May 31, 2001
For: LYOPHILIZABLE AND ENHANCED COMPACTED NUCLEIC ACIDS

Dear Dr. Costello:

You are named as a joint inventor in the above identified United States patent application, filed under the provisions of 35 U.S.C. 116 (United States Code), and 37 CFR 1.47(a), Rules of Practice in Patent Cases. Should a patent be granted on the application you will be designated therein as a joint inventor.

As a named inventor you are entitled to inspect any paper in the file wrapper of the application, order copies of all or any part thereof (at a prepaid cost per 37 CFR 1.19) or make your position of record in the application. Alternatively, you may arrange to do any of the preceding through a registered patent attorney or agent presenting written authorization from you. If you care to join in the application, counsel of record (see below) would presumably assist you. Joining in the application would entail the filing of an appropriate oath or declaration by you pursuant to 37 CFR 1.63.

Telephone inquiries regarding this communication should be directed to the Irvin Dingle at (703) 306-5684. Requests for information regarding your application should be directed to the File Information Unit at (703) 308-2733. Information regarding how to pay for and order a copy of the application, or a specific paper in the application, should be directed to Certification Division at (703) 308-9726 or 1 (800) 972-6382 (outside the Washington D.C. area).

Frances Hicks

Frances Hicks
Lead Petitions Examiner
Office of Petitions
Office of the Deputy Commissioner
for Patent Examination Policy

cc:

Banner & Witcoff, Ltd.
1001 G Street, NW
Washington, DC 20001

UNITED STATES PATENT AND TRADEMARK OFFICE

UNITED STATES DEPARTMENT OF COMMERCE
United States Patent and Trademark Office
Address: COMMISSIONER FOR PATENTS
P.O. Box 1450
Alexandria, Virginia 22313-1450
www.uspto.gov

WOOD, HERRON & EVANS, LLP
2700 CAREW TOWER
441 VINE STREET
CINCINNATI, OH 45202

Mail Date: 04/21/2010

Applicant	: Chinping Q. Yang	: DECISION ON REQUEST FOR
Patent Number	: 7668317	: RECALCULATION of PATENT
Issue Date	: 02/23/2010	: TERM ADJUSTMENT IN VIEW
Appliction No	: 09/867,736	: OF WYETH AND NOTICE OF INTENT TO
Filed	: 05/30/2001	: ISSUE CERTIFICATE OF CORRECTION
		:

The Request for Recalculation is **GRANTED** to the extent indicated.

The patent term adjustment has been determined to be **1246** days. The USPTO will *sua sponte* issue a certificate of correction reflecting the amount of PTA days determined by the recalculation.

Prior to the issuance of the certificate of correction, the USPTO will afford patentee an opportunity to be heard and request reconsideration. Accordingly, patentee has **one month or thirty (30) days**, whichever is longer, to file a request for reconsideration of this patent term adjustment calculation. See 35 U.S.C. 154(b)(3)(B)(ii) and 37 CFR 1.322(a)(4). No extensions of time will be granted under 37 CFR 1.136.

Patentee should use document code PET.OP if electronically filing a request for reconsideration of this patent term adjustment calculation. The patentee must also include the information required by 37 CFR 1.705(b)(2) and the fee required by 37 CFR 1.18(e). If patentee does not file a timely request for reconsideration of this patent term adjustment calculation including the information required by 37 CFR 1.705(b)(2) and the fee required by 37 CFR 1.18(e), the USPTO will issue a certificate of correction reflecting the PTA determination noted above.

Patentee should be aware that in order to preserve the right to review in the United States District Court for the District of Columbia of the USPTO patent term adjustment determination, patentee must ensure that he or she also take the steps required under 35 U.S.C. 154(b)(4)(A) in a timely manner. Nothing in the request for recalculation should be construed as providing an alternative time frame for commencing a civil action under 35 U.S.C. 154(b)(4)(A).

Any questions concerning this decision should be directed to the Office of Patent Legal Administration at 571-272-7702.

UNITED STATES PATENT AND TRADEMARK OFFICE

Commissioner for Patents
United States Patent and Trademark Office
P. O. Box 1450
Alexandria, VA 22313-1450
www.uspto.gov

Paper No.

COPY MAILED

SEP 2 6 2003

OFFICE OF PETITIONS

MORGAN LEWIS & BOCKIUS LLP
1111 PENNSYLVANIA AVENUE NW
WASHINGTON, DC 20004

In re Application of
Kenichi Nishikawa
Application No. 09/867,758
Filed: May 31, 2001
Attorney Docket No. 040894-5665

ON PETITION

This is a decision on the petition, filed September 24, 2003, under 37 CFR 1.313(c)(2) to withdraw the above-identified application from issue after payment of the issue fee.

The petition is **GRANTED**.

The above-identified application is withdrawn from issue for consideration of a submission under 37 CFR 1.114 (request for continued examination). See 37 CFR 1.313(c)(2).

Petitioner is advised that the issue fee paid on August 29, 2003 in the above-identified application cannot be refunded. If, however, the above-identified application is again allowed, petitioner may request that it be applied towards the issue fee required by the new Notice of Allowance.[1]

Telephone inquiries should be directed to Irvin Dingle at (703) 306-5684.

After receipt of the file in the Office of Petitions, the file will be forwarded to Technology Center AU 2879 for processing of the request for continued examination under 37 CFR 1.114 and for consideration of the concurrently filed Information Disclosure Statement.

Irvin Dingle
Petitions Examiner
Office of Petitions
Office of the Deputy Commissioner
for Patent Examination Policy

---

[1] The request to apply the issue fee to the new Notice may be satisfied by completing and returning the new Issue Fee Transmittal Form PTOL-85(b), which includes the following language thereon: "Commissioner for Patents is requested to apply the Issue Fee and Publication Fee (if any) or re-apply any previously paid issue fee to the application identified above." Petitioner is advised that, whether a fee is indicated as being due or not, the Issue Fee Transmittal Form **must** be completed and timely submitted to avoid abandonment. Note the language in bold text on the first page of the Notice of Allowance and Fee(s) Due (PTOL-85).

SPE RESPONSE FOR CERTIFICATE OF CORRECTION

Paper No.: _____

DATE : 03/08/07

TO SPE OF : ART UNIT 1616

SUBJECT : Request for Certificate of Correction for Appl. No.: **09/867813** Patent No.: **7025972**

Please respond to this request for a certificate of correction within 7 days.

Please review the requested changes/corrections as shown in the **COCIN** document(s) in the IFW application image. No new matter should be introduced, nor should the scope or meaning of the claims be changed.

Please complete the response (see below) and forward the completed response to scanning using document code **COCX**.

Angela Green
Certificates of Correction Branch
703.308.9380 ext.

Thank You For Your Assistance

The request for issuing the above-identified correction(s) is hereby:
Note your decision on the appropriate box.

- ☒ **Approved** — All changes apply.
- ☐ **Approved in Part** — Specify below which changes **do not** apply.
- ☐ **Denied** — State the reasons for denial below.

Comments: _____

_____

_____

_____

_____

[illegible] PAT. EXAM. R
GROUP 12[illegible]

SPE

1616
Art Unit

PTOL-306 (REV. 7/03)

U.S. DEPARTMENT OF COMMERCE Patent and Trademark Office

UNITED STATES PATENT AND TRADEMARK OFFICE

COMMISSIONER FOR PATENTS
UNITED STATES PATENT AND TRADEMARK OFFICE
WASHINGTON, D.C. 20231
www.uspto.gov

Paper No. 3

SCOTT C. HARRIS
FISH & RICHARDSON P.C.
45 ROCKEFELLER PLAZA, SUITE 2800
NEW YORK, NY 10111

COPY MAILED

FEB 27 2002

OFFICE OF PETITIONS

In re Application of :
Vladimir Berezin et al. :
Application No. 09/867,846 :
Filed: May 29, 2001 :
Attorney Docket No. 08305 / 045002 / 98-22-C1 :

NOTICE

This is a notice regarding your request for acceptance of a fee deficiency submission under 37 CFR 1.28. On September 1, 1998, the Court of Appeals for the Federal Circuit held that 37 CFR 1.28(c) is the sole provision governing the time for correction of the erroneous payment of the issue fee as a small entity. **See DH Technology v. Synergystex International, Inc. 154 F.3d 1333, 47 USPQ2d 1865 (Fed. Cir. Sept. 1, 1998).**

The Office no longer investigates or rejects original or reissue applications under 37 CFR 1.56. **1098 Off. Gaz. Pat. Office 502 (January 3, 1989)**. Therefore, nothing in this Notice is intended to imply that an investigation was done.

Your fee deficiency submission under 37 CFR 1.28 is hereby **ACCEPTED**.

Inquiries related to this communication should be directed to the Office of Petitions Staff at (703) 305-9285.

This file is being forwarded to Technology Center 2800.

Irvin Dingle
Petitions Examiner
Office of Petitions
Office of the Deputy Commissioner
for Patent Examination Policy

UNITED STATES PATENT AND TRADEMARK OFFICE

Commissioner for Patents
United States Patent and Trademark Office
Washington, D.C. 20231
www.uspto.gov

Paper No. 13
COPY MAILED

APR 1 1 2003

Director's Office
Office of Patent Publication

LISA BRZYCKI
GEHRKE & ASSOCIATES, S.C.
123 NORTH 86TH STREET
WAUWATOSA, WI 53226

In re Application of	:	
Alexander Rizkin, et al.	:	
Application No. 09/867,881	:	**DECISION ON PETITION**
Filed: May 30, 2001	:	
Attorney Docket No. 166.134	:	

This is a decision on the Petition To Withdraw Holding Of Abandonment Pursuant to 37 CFR 1.181(a), received in the United Patent & Trademark Office (USPTO) on November 18, 2002.

The petition is **DISMISSED**.

The application was held abandoned for failure to timely pay the issue fee as required in the NOTICE OF ALLOWANCE AND FEE(S) DUE, mailed April 23, 2002, which set a three (3) month statutory period for reply. Accordingly, the Notice of Abandonment was mailed October 17, 2002.

Petitioner states that the issue fee was timely paid on July 23, 2002. In support of this assertion, petitioner has submitted a copy of the PTO-stamped postcard, which indicates that the PTO received the Issue Fee and Drawings on July 23, 2002.

The USPTO acknowledges receipt of PART B – FEE(S) TRANSMITTAL and Drawings on July 31, 2002, as evidenced by the "Office Date" stamp thereon, and which are present in the application file. The TRANSMITTAL authorized that the required fees be charged to Deposit Account No. 50-2241. Unfortunately, on October 3, 2002, when the Office of Finance attempted charge the Issue Fee, Publication fee, and advance copy fee, there were insufficient funds in the Deposit Account. The petitioner therefore has not complied with 37 CFR 1.25(b), which states in part:

> ... An authorization to charge a fee to a deposit account will not be considered payment of the fee on the date the authorization to charge the fee is effective as to the particular fee to charged unless sufficient funds are present in the account to cover the fee.

In light of the non-compliance with 37 CFR 1.25(b), the holding of abandonment cannot at this time be withdrawn.

The petitioner should consider petitioning the Commissioner as follows:

File a petition for Revival of Abandoned Application or Lapsed Patent under CFR § 1.137 (a) (a) or (b).

- Under 37 CFR 1.137(a), a petition for the revival of an ***unavoidably*** abandoned application must be accompanied by the following:

  (1) The required reply to the outstanding Office action or notice, unless previously filed;
  (2) The petition fee set forth in § 1.17(l);
  (3) A showing to the satisfaction of the Commissioner that the entire delay in filing the required reply from the due date for the reply until the filing of a grantable petition pursuant to this paragraph was unavoidable: and
  (4) Any terminal disclaimer (and fee as set forth in § 1.20(d) required pursuant to paragraph (c) of this section.

  With respect to an application filed before June 8, 1995, any petition under § 1.137(a) or (b) that is filed more than six months after the abandonment date must —according to § 1.137(d)—be accompanied by a terminal disclaimer with disclaimer fee.

- Under 37 CFR 1.137(b), a petition for the revival of an ***unintentionally*** abandoned application must be accompanied by the following:

  (1) The required reply to the outstanding Office action or notice, unless previously filed;
  (2) The petition fee as set forth in § 1.17(m);
  (3) A statement that the entire delay in filing the required reply from the due date for the reply until the filing of a grantable petition pursuant to this paragraph was unintentional. The Commissioner may require additional information where there is a question whether the delay was unintentional;
  (4) Any terminal disclaimer (and fee as set forth in § 1.20(d) required pursuant to paragraph (c) of this section.

Further correspondence with respect to this matter should be addressed as follows:

By mail:	Assistant Commissioner for Patents Box DAC Washington, DC 20231
By facsimile:	703-308-6916 Attn.: Office of Petitions
By hand:	Crystal Plaza Four, Rm. 3C23 2201 South Park Place Arlington, VA

Telephone inquires concerning this matter may be directed to the Office of Petitions at 703-305-9282.

Thomas E. Hawkins

Thomas E. Hawkins
Paralegal Specialist
Office of the Director
Office of Patent Publication

UNITED STATES PATENT AND TRADEMARK OFFICE

COMMISSIONER FOR PATENTS
UNITED STATES PATENT AND TRADEMARK OFFICE
P.O. BOX 1450
ALEXANDRIA, VA 22313-1450
WWW.USPTO.GOV

LISA BRZYCKI
GEHRKE & ASSOCIATES, S. C.
123 NORTH 86th STREET
WAUWATOSA WI 53226

COPY MAILED

AUG 03 2005

OFFICE OF PETITIONS

In re Application of
RIZKIN
Application No.: 09/867,881
Attorney Docket No.:309.001

: DECISION on PETITION
:
: UNDER 37 CFR 1.137(b)
:

This is a decision on the petition under 37 CFR 1.137(b), filed November 08, 2004 to revive the above-identified application.

The petition is **GRANTED**.

The above-identified application became abandoned for failure to submit the issue and publication fees in a timely manner in reply to the Notice of Allowance mailed April 23, 2002, which set a statutory period for reply of three (3) months. Accordingly, the above-identified application became abandoned at midnight on July 23, 2003.

The petition satisfies the conditions for revival pursuant to the provisions of 37 CFR 1.137(b) in that (1) the reply in the form of payment of the issue and publication fees, (2) the petition fee; and (3) the required statement of unintentional delay have been received. Accordingly, the issue and publication fees are accepted as having been unintentionally delayed.

The application is being referred to Publishing Division.

Telephone inquiries concerning this decision should be directed to Cynthia Kratz at (571) 272-3286 or in her absence, the undersigned at (571) 272-3217.

Frances Hicks for
Brian Hearn
Petitions Examiner
Office of Petitions

UNITED STATES PATENT AND TRADEMARK OFFICE

Commissioner for Patents
United States Patent and Trademark Office
P.O. Box 1450
Alexandria, VA 22313-1450
www.uspto.gov

BERRY & ASSOCIATES P.C.
9255 SUNSET BOULEVARD
SUITE 810
LOS ANGELES CA 90069

COPY MAILED

NOV 0 3 2008

OFFICE OF PETITIONS

In re Application of	:	
David Blight	:	
Application No. 09/867,907	:	DECISION ON PETITION
Filed: May 30, 2001	:	
Attorney Docket No. 3605.PALM.PSI	:	

This is a decision on the petition under the unintentional provisions of 37 CFR 1.137(b), filed December 2, 2007, to revive the above-identified application.

The petition is **GRANTED**.

The application became abandoned for failure to reply in a timely manner to the non-final Office action mailed March 22, 2007, which set a shortened statutory period for reply of three (3) months. No extensions of time under the provisions of 37 CFR 1.136(a) were obtained. Accordingly, the application became abandoned on June 23, 2007. A Notice of Abandonment was mailed October 1, 2007.

The petition satisfies the requirements of 37 CFR 1.137(b) in that petitioner has supplied (1) the reply in the form of an Amendment, (2) the petition fee of $1,540.00, and (3) an adequate statement of unintentional delay.

Telephone inquiries concerning this decision should be directed to Joan Olszewski at (571) 272-7751.

This application is being referred to Technology Center AU 2618 for appropriate action by the Examiner in the normal course of business on the reply received.

/Liana Walsh/
Liana Walsh
Petitions Examiner
Office of Petitions

SPE RESPONSE FOR CERTIFICATE OF CORRECTION

DATE : February 8, 2010

TO SPE OF : ART UNIT 2446
SUBJECT : Request for Certificate of Correction for Appl. No /09/867944 / Patent no.6983305

Please respond to this request for a certificate of correction w
ithin 7 days.

FOR IFW FILES:

Please review the requested changes/corrections as shown in the **COCIN** document(s) in the IFW application image. No new matter should be introduced, nor should the scope or meaning of the claims be changed.

Please complete the response (see below) and forward the completed response to scanning using document code **COCX**.

FOR PAPER FILES:

Please review the requested changes/corrections as shown in the attached certificate of correction. Please complete this form (see below) and forward it with the file to:

Certificates of Correction Branch (CofC)
Randolph Square – 9D10-A
Palm Location 7580

Magdalene Talley

Certificates of Correction Branch
571-272-0423 _____

Thank You For Your Assistance

The request for issuing the above-identified correction(s) is hereby:
Note your decision on the appropriate box.

- ☑ **Approved** — **All** changes apply.
- ☐ **Approved in Part** — Specify below which changes **do not** apply.
- ☐ **Denied** — State the reasons for denial below.

Comments: _____

SPE AU 2446

UNITED STATES PATENT AND TRADEMARK OFFICE

Commissioner for Patents
United States Patent and Trademark Office
Washington, D.C. 20231
www.uspto.gov

Paper No. 8

FROMMER LAWRENCE & HAUG
745 FIFTH AVENUE- 10TH FL.
NEW YORK, NY 10151

COPY MAILED

FEB 24 2003

OFFICE OF PETITIONS

In re Application of
Kingsman et al.
Application No. 09/867,947
Filed: May 29, 2001
Attorney Docket Number:
674523-2006.1

DECISION ON PETITION

This is a decision on the petition filed January 30, 2003, requesting that the above-identified application be accorded a filing date of May 29, 2001, including pages 72 - 75 of the application as part of the original disclosure.

The petition is granted.

The application was deposited on May 29, 2001. However, on December 11, 2002, the Office mailed a "Notice of Omitted Item(s) in a Nonprovisional Application" (hereinafter "Notice") stating that the application had been accorded a filing date of May 29, 2001, and advising applicants that pages 72 - 75 of the specification appeared to have been omitted from the application.

Petitioner responds with the instant petition wherein Petitioner avers that pages 72 - 75 of the application were included when the application was deposited on May 29, 2001. The petition is supported by a copy of a return-receipt postcard which acknowledges receipt of 76 pages of application and 43 sheets of drawings on May 29, 2001.

A review of the return receipt postcard reveals that Petitioner is correct. The postcard acknowledges receipt of 76 pages of application and 43 sheets of drawings on May 29, 2001. Petitioner has also re-submitted pages 72 - 75 of the application with the instant petition.

Evidence of receipt of any correspondence filed in the Patent and Trademark Office can be obtained by submitting a self-addressed postcard properly itemizing and identifying the paper or papers being filed. Upon receipt of the correspondence, the Patent and Trademark Office will check the listing on the post card against the papers submitted, making sure that all items listed are present and will then stamp the postcard with an Official date

stamp and place the postcard in the outgoing mail. "A postcard receipt which itemizes and properly identifies the papers which are being filed serves as *prima facie* evidence of receipt in the PTO of all items listed thereon by the PTO." MPEP § 503.

No petition fee is required. A refund of the petition fee, $130.00, has been scheduled.

The application will be returned to the Office of Initial Patent Examination for further processing as a nonprovisional application with a filing date of May 29, 2001, and an indication that 76 pages of specification, including pages 72 - 75 of the specification, were present on filing.

Telephone inquiries concerning this matter should be directed to Petitions Attorney Derek L. Woods at (703) 305-0014.

Christina Tartera Donnell

Beverly M. Flanagan
Supervisory Petitions Examiner
Office of Petitions

Conferee: Christina Donnell, Esq.

UNITED STATES PATENT AND TRADEMARK OFFICE

COMMISSIONER FOR PATENTS
UNITED STATES PATENT AND TRADEMARK OFFICE
P.O. BOX 1450
ALEXANDRIA, VA 22313-1450
www.uspto.gov

Paper No. 14

Chiron Corporation
Intellectual Property
P.O. Box 8097
Emeryville CA 94662-8097

COPY MAILED

OCT 17 2003

OFFICE OF PETITIONS

In re Application of
Maiorella, et al.
Application No. 09/867,948
Filed: May 30, 2001
Attorney Docket No. PP00693.104
For: METHOD OF INCREASING PRODUCT EXPRESSION THROUGH SOLUTE STRESS

: DECISION ON PETITION
: UNDER 37 CFR 1.78(a)(3)

This is a decision on the petition under 37 CFR 1.78(a)(3), filed July 28, 2003 (certificate of mailing date July 23, 2003), to accept an unintentionally delayed claim under 35 U.S.C. § 120 for the benefit of priority to the prior-filed nonprovisional applications set forth in the amendment filed concurrently with the instant petition.

The petition is **GRANTED**.

A petition for acceptance of a claim for late priority under 37 CFR 1.78(a)(3) is only applicable to those applications filed on or after November 29, 2000. Further, the petition is appropriate only after the expiration of the period specified in 37 CFR 1.78(a)(2)(ii). In addition, the petition under 37 CFR 1.78(a)(3) must be accompanied by:

> **(1)** the reference required by 35 U.S.C. § 120 and 37 CFR 1.78(a)(2)(i) of the prior-filed application(s), unless previously submitted;[1]
> **(2)** the surcharge set forth in § 1.17(t); and
> **(3)** a statement that the entire delay between the date the claim was due under 37 CFR 1.78(a)(2)(ii) and the date the claim was filed was unintentional. The Commissioner may require additional information where there is a question whether the delay was unintentional.

The instant pending application was filed on May 30, 2001, and was pending at the time of filing of the instant petition. A reference to the prior-filed nonprovisional applications has been included in an amendment to the first sentence of the specification following the title, as required by 37 CFR 1.78(a)(2)(iii).

The instant nonprovisional application was filed after November 29, 2000, and the claim herein

---

[1] Any nonprovisional application or international application designating the United States of America claiming the benefit of one or more prior-filed copending applications or international applications designating the United States of America must contain or be amended to contain a reference (amendment to the first line of the specification following the title or in an application data sheet (ADS) to each such prior-filed application, identifying it by application number (consisting of the series code and serial number) or international application number and international filing date filing date and indicating the relationship of the applications. Cross references to other related applications may be made when appropriate (*see* § 1.14).

for the benefit of priority to the prior-filed nonprovisional applications is submitted after expiration of the period specified in 37 CFR 1.78(a)(2)(ii). Also, the reference to the prior-filed applications was submitted during the pendency of the instant nonprovisional application. *See* 35 U.S.C. § 120. Accordingly, having found that the instant petition for acceptance of an unintentionally delayed claim for the benefit of priority under 35 U.S.C. § 120 to the prior-filed nonprovisional applications satisfies the conditions of 37 CFR 1.78(a)(3), the petition is granted.

A corrected Filing Receipt, which includes the priority claim to the prior-filed nonprovisional applications, accompanies this decision on petition.

The granting of the petition to accept the delayed benefit claim to the prior-filed application(s) under 37 CFR 1.78(a)(3) should not be construed as meaning that the instant application is entitled to the benefit of the prior-filed application(s). In order for the instant application to be entitled to the benefit of the prior-filed application(s), all other requirements under 35 U.S.C. § 120 and 37 CFR 1.78(a)(1) and (a)(2) must be met. Similarly, the fact that the corrected Filing Receipt accompanying this decision on petition includes the prior-filed applications should not be construed as meaning that applicant is entitled to the claim for benefit of priority to the prior-filed applications noted thereon. Accordingly, the examiner will, in due course, consider this benefit claim and determine whether the instant application is entitled to the benefit of the earlier filing date.

There is no indication that petitioner herein was ever empowered to prosecute the instant application. If petitioner desires to receive future correspondence regarding this application, the appropriate power of attorney documentation must be submitted. A courtesy copy of this decision will be mailed to petitioner. However, all future correspondence will be directed to the address of record until such time as appropriate instructions are received to the contrary.

Any inquiries concerning this decision may be directed to the undersigned at (703) 308-6712.

This application is being forwarded to Technology Center Art Unit 1653 for examination in due course and for processing and consideration by the Examiner of applicant's claim under 35 U.S.C. § 120 and 37 CFR 1.78(a)(1) and (2) for the benefit of priority to the prior-filed nonprovisional applications.

Beverly M. Flanagan
Supervisory Petitions Examiner
Office of Petitions

ATTACHMENT: Corrected Filing Receipt

cc: ERIC J. KRON
ALSTON BIRD LLP
BANK OF AMERICA PLAZA
101 SOUTH TRYON STREET, SUITE 4000
CHARLOTTE NC 28280-4000

UNITED STATES PATENT AND TRADEMARK OFFICE

Commissioner for Patents
United States Patent and Trademark Office
Washington, D.C. 20231
www.uspto.gov

Paper No. 5

TOWNSEND AND TOWNSEND AND CREW, LLP
TWO EMBARCADERO CENTER
EIGHTH FLOOR
SAN FRANCISCO, CA 94111-3834

COPY MAILED

FEB 14 2002

OFFICE OF PETITIONS

In re Application of
Bruce Hammock et al.
Application No. 09/867,963
Filed: May 29, 2001
Title: DIHYDROXY UNSATURATED FATTY ACID LEVELS AS DIAGNOSTIC MARKERS

DECISION ON PETITION

This is a decision on the petition filed January 8, 2002, requesting that the above-identified application be accorded a filing date of May 29, 2001.

Application papers in the above-identified application were filed on May 29, 2001. However, on July 27, 2001, the Office of Initial Patent Examination mailed a "Notice of Incomplete Nonprovisional Application," notifying applicant that the application papers had not been accorded a filing date because the application was deposited without drawings as prescribed by 35 U.S.C. 113.

Petitioner asserts, in essence, that nine sheets of drawings were among the papers filed on May 29, 2001, and submits a postcard receipt in evidence thereof. The postcard receipt, identifies the application and acknowledges, inter alia, the number of drawing sheets to be 9 and bears a United States Patent and Trademark Office date-stamp of May 29, 2001. Further, the postcard receipt lacks any notation of non-receipt of any item listed.

In view of the foregoing, the petition is **granted**.

Given the basis for granting the petition, the petition fee has been refunded to Deposit Account No. 20-1430, as requested.

This application is being forwarded to the Office of Initial Patent Examination (OIPE) for further processing with a filing date of May 29, 2001, using the application papers received in the Office on that date, the nine sheets of drawings resubmitted on petition, and the oath or declaration in compliance with 37 CFR 1.63, filed January 8, 2002. Applicant will receive appropriate notifications regarding the fees owed, if any, and other information in due course from OIPE.

Telephone inquiries regarding this decision should be directed to Petitions Attorney Patricia Faison-Ball at (703) 305-4497.

Patricia Faison-Ball

Patricia Faison-Ball
Petitions Attorney
Office of Petitions
Office of the Deputy Commissioner
for Patent Examination Policy

Beverly M. Flanagan

Beverly M. Flanagan
Supervisory Petitions Examiner
Office of Petitions
Office of the Deputy Commissioner
for Patent Examination Policy

UNITED STATES PATENT AND TRADEMARK OFFICE

COMMISSIONER FOR PATENTS
UNITED STATES PATENT AND TRADEMARK OFFICE
WASHINGTON, DC 20231
www.uspto.gov

Paper No. 4

MAIL

DEC 23 2002

DIRECTOR OFFICE
TECHNOLOGY CENTER 2600

BEYER WEAVER & THOMAS LLP
P.O. BOX 778
BERKELEY CA 94704-0778

In re Application of:
Fang Wu et al
Application No.: 09/867,966
Filed: May 29, 2001
For: **METHODS AND APPARATUS FOR TRANSFORM COEFFICIENT FILTERING**

DECISION ON REQUEST TO WITHDRAW AS ATTORNEY

This is a decision on the Request To Withdraw from Representation filed November 5, 2002.

A grantable request to withdraw as attorney of record should indicate thereon the present mailing addresses of the attorney(s) who is/are withdrawing from the record and of the applicant. The request for withdrawal must be signed by every attorney seeking to withdraw or contain a clear indication that one attorney is signing on behalf of another/others. A request to withdraw will not be approved unless at least 30 (thirty) days would remain between the date of approval and the later of the expiration date of a time to file a response or the expiration date of the maximum time period which can be extended under 37 C.F.R. 1.136(a). The effective date of withdrawal being the date of decision and not the date of request. See M.P.E.P. 402.06. 37 C.F.R. 1.36 further requires that the applicant or patent owner be notified of the withdrawal of the attorney or agent.

The signer of the petition, William J. Plut, is not appointed as an attorney or agent of record.

For the above stated reasons, the request is **DISMISSED AS MOOT**.

All future communications from the Office will continue to be directed to the above-listed address unless the Office receives proper notification of a change in Power of Attorney and/or correspondence address.

Krista Zele
Special Program Examiner
Technology Center 2600
Communications & Information Processing
(703) 305-4701

UNITED STATES PATENT AND TRADEMARK OFFICE

COMMISSIONER FOR PATENTS
UNITED STATES PATENT AND TRADEMARK OFFICE
WASHINGTON, DC 20231
www.uspto.gov

Paper No. 4

BEYER WEAVER & THOMAS LLP
P.O. BOX 778
BERKELEY CA 94704-0778

MAIL

DEC 04 2002

DIRECTOR OFFICE
TECHNOLOGY CENTER 2600

In re Application of:
Ke Shen et al
Application No.: 09/867,967
Filed: May 29, 2001
For: **METHODS AND APPARATUS FOR UPDATING A REDUCTION RATIO**

DECISION ON REQUEST TO WITHDRAW AS ATTORNEY

This is a decision on the Request To Withdraw from Representation filed November 5, 2002.

A grantable request to withdraw as attorney of record should indicate thereon the present mailing addresses of the attorney(s) who is/are withdrawing from the record and of the applicant. The request for withdrawal must be signed by every attorney seeking to withdraw or contain a clear indication that one attorney is signing on behalf of another/others. A request to withdraw will not be approved unless at least 30 (thirty) days would remain between the date of approval and the later of the expiration date of a time to file a response or the expiration date of the maximum time period which can be extended under 37 C.F.R., 1.136(a). The effective date of withdrawal being the date of decision and not the date of request. See M.P.E.P., 402.06. 37 C.F.R., 1.36 further requires that the applicant or patent owner be notified of the withdrawal of the attorney or agent.

The signer of the petition, William J. Plut, is not appointed as an attorney or agent of record. For the above stated reasons, the request is **DISMISSED AS MOOT**.

All future communications from the Office will continue to be directed to the above-listed address unless the Office receives proper notification of a change in Power of Attorney and/or correspondence address.

Krista Zele
Special Program Examiner
Technology Center 2600
Communications & Information Processing
(703) 305-4701

UNITED STATES PATENT AND TRADEMARK OFFICE

Commissioner for Patents
United States Patent and Trademark Office
P.O. Box 1450
Alexandria, VA 22313-1450
www.uspto.gov

AMIN, TUROCY & CALVIN, LLP
1900 EAST NINTH STREET
24TH FLOOR, NATIONAL CITY CENTER
CLEVELAND, OH 44114

COPY MAILED

MAR 0 3 2008

OFFICE OF PETITIONS

In re Patent No. 7,006,818	:	
Issue Date: February 28, 2006	:	
Application No. 09/867,989	:	DECISION ON PETITION
Filed: May 30, 2001	:	
Patentee(s): Loc Yu	:	

This is a decision on the petitioner under 37 CFR 1.183 filed on February 21, 2007, which is being treated as a request under 37 CFR 3.81(b) to correct the name of the assignee on the front page of the above patent by way of a certificate of correction.

It is not apparent whether the person signing the instant petition was ever given a power of attorney or authorization of agent to prosecute the above-identified application. However, in accordance with 37 CFR 1.34(a), the signature appearing on the petition shall constitute a representation to the United States Patent and Trademark Office that he/she is authorized to represent the particular party in whose behalf he/she acts.

The petition is **dismissed**.

37 CFR 3.81(b) permits the patent to issue in the name of an assignee if the assignment was submitted after payment of the issue fee, but ***prior to issuance of a patent***.

Petitioner requests issuance of a Certificate of Correction in the name of "Cingular Wireless II, LLC, Atlanta, GA." However, USPTO assignment records fail to show that an assignment listing the name of the assignee as "Cingular Wireless II, LLC, Atlanta, GA," was submitted for recordation prior to issuance of the above patent. Therefore, a Certificate of Correction would not be in order.

This application file is being referred to Files Repository.

Inquiries concerning this decision should be directed to the undersigned at (571) 272-3226.

Andrea Smith
Petitions Examiner
Office of Petitions

UNITED STATES PATENT AND TRADEMARK OFFICE

COMMISSIONER FOR PATENTS
UNITED STATES PATENT AND TRADEMARK OFFICE
P.O. BOX 1450
ALEXANDRIA, VA 22313-1450
www.uspto.gov

Paper No. 7

NASA JOHNSON SPACE CENTER
MAIL CODE HA
2101 NASA ROAD 1
HOUSTON, TX 77058

COPY MAILED

NOV 1 4 2003

OFFICE OF PETITIONS

In re Application of
Patrick W. Fink, et. al.
Application No. 09/867,993
Filed: May 24, 2001
Attorney Docket No. MSC-23228-1

ON PETITION

This is a decision on the petition under 37 CFR 1.137(b), filed November 3, 2003, to revive the above-identified application.

The above-identified application became abandoned for failure to reply in a timely manner to the non-final Office action mailed April 25, 2002, which set a shortened statutory period for reply of three (3) months. No extensions of time under the provisions of 37 CFR 1.136(a) were obtained. Accordingly, the above-identified application became abandoned after midnight July 25, 2002.

In response to the non-final Office action, petitioner submitted with the instant petition an authorization to charge $1,330 for the petition to revive fee, and an amendment.

In view of the above authorization, $1,330 was charged to petitioner's deposit account.

Since the requirements for a grantable petition have been met, the petition is **GRANTED**

The application file is being forwarded to Technology Center 3600, for further review of the amendment filed with the instant petition.

Telephone inquiries concerning this decision should be directed to Andrea Smith at (703) 308-6711.

Andrea Smith
Petitions Examiner
Office of Petitions
Office of the Deputy Commissioner
for Patent Examination Policy

24 SEP 2002

#7

UNITED STATES PATENT AND TRADEMARK OFFICE

COMMISSIONER FOR PATENTS
UNITED STATES PATENT AND TRADEMARK OFFICE
WASHINGTON, D.C. 20231
www.uspto.gov

Albert P. Halluin
Howrey Simon Arnold & White
301 Ravenswood Avenue
Box 34
Menlo Park, CA 94025

In re Application of FRAZER, Ian et al. Application No.: 09/868,009 PCT No.: PCT/AU99/01108 Int. Filing Date: 13 December 1999 Priority Date: 11 December 1998 Attorney's Docket No.: 10905.0003.PCUS00 For: TREATMENT OF PAPILLOMAVIRUS INFECTIONS	DECISION ON REQUEST UNDER 37 CFR 1.42

This decision is in response to applicants' response to Notification of Missing Requirements, filed 04 June 2002. A review of the Declaration reveals an indication that joint inventor Jian Zhou is deceased. Applicants' submission has been treated as a request for status under 37 CFR 1.42.

BACKGROUND

On 13 December 1999, applicants filed international application PCT/AU99/01108. A copy of the international application was communicated to the United States Patent and Trademark Office (USPTO) from the International Bureau on 22 June 2000. On 24 May 2000, a demand for international preliminary examination was filed within nineteen months from the priority date. As such, the deadline for entry into the national stage in the United States was 11 June 2001.

On 11 June 2001, applicants filed a submission for entry into the national stage in the United States which was accompanied by, *inter alia*, the U.S. Basic National Fee.

On 04 February 2002, USPTO mailed a Notification of Missing Requirements (Form PCT/DO/EO/905) indicating, *inter alia*, that an oath or declaration of the inventors, in compliance with 37 CFR 1.497(a)-(b) was required.

On 04 June 2002, applicants filed a declaration.

DISCUSSION

Under 35 U.S.C. §117, legal representatives of deceased inventors may make application for patent upon compliance with the requirements and on the same terms and conditions

applicable to the inventor. The "legal representative (executor, administrator, etc.) of the deceased inventor may make the necessary oath or declaration, and apply for and obtain the patent." 37 CFR 1.42.

In this case, Xiao Yi Sun signed the declaration as legal representative of the deceased inventor. However, the declaration must list the citizenship, residence and postal address for both Xiao Yi Sun and inventor Zhou. See 37 CFR 1.497 and 37 CFR 1.63. The declaration lists only the information for Xiao Yi Sun. The declaration must also list the information of the deceased inventor.

CONCLUSION

For the above reasons, the request for status under 37 CFR 1.42 is **REFUSED**.

Applicant is required to submit a declaration in compliance with 37 CFR 1.497 and 1.42 within a time period of **TWO (2) MONTHS** from the mail date of this Decision. THIS PERIOD FOR RESPONSE MAY BE EXTENDED UNDER 37 CFR 1.136(a). FAILURE TO PROPERLY RESPOND WILL RESULT IN ABANDONMENT. Any request for reconsideration of this decision should include a cover letter entitled "Renewed Submission Under 37 CFR 1.42."

Please direct any further correspondence with respect to this matter to the Commissioner of Patents and Trademarks, Box PCT, Washington, D.C. 20231, and address the contents of the letter to the attention of the Office of PCT Legal Administration.

Boris Milef
PCT Legal Examiner
PCT Legal Administration

Erin M. Pender
Attorney Advisor
PCT Legal Administration

Telephone: (703) 305-0455
Facsimile: (703) 308-6459

10 FEB 2003

#9

UNITED STATES PATENT AND TRADEMARK OFFICE

COMMISSIONER FOR PATENTS
UNITED STATES PATENT AND TRADEMARK OFFICE
WASHINGTON, D.C. 20231
www.uspto.gov

Albert P. Halluin
Howrey Simon Arnold & White
301 Ravenswood Avenue
Box 34
Menlo Park, CA 94025

In re Application of FRAZER, Ian et al. Application No.: 09/868,009 PCT No.: PCT/AU99/01108 Int. Filing Date: 13 December 1999 Priority Date: 11 December 1998 Attorney's Docket No.: 10905.0003.PCUS00 For: TREATMENT OF PAPILLOMAVIRUS INFECTIONS	DECISION ON REQUEST UNDER 37 CFR 1.42

This decision is in response to applicants' "Response to Decision on Request Under 37 C.F.R. §1.42," filed with the United States Patent and Trademark Office on 21 November 2002.

BACKGROUND

On 13 December 1999, applicants filed international application PCT/AU99/01108. A copy of the international application was communicated to the United States Patent and Trademark Office (USPTO) from the International Bureau on 22 June 2000. On 24 May 2000, a demand for international preliminary examination was filed within nineteen months from the priority date. As such, the deadline for entry into the national stage in the United States was 11 June 2001.

On 11 June 2001, applicants filed a submission for entry into the national stage in the United States which was accompanied by, *inter alia*, the U.S. Basic National Fee.

On 04 February 2002, USPTO mailed a Notification of Missing Requirements (Form PCT/DO/EO/905) indicating, *inter alia*, that an oath or declaration of the inventors, in compliance with 37 CFR 1.497(a)-(b) was required.

On 04 June 2002, applicants filed a declaration.

On 24 September 2002, the Office mailed Decision On Request Under 37 CFR 1.42.

DISCUSSION

Under 35 U.S.C. §117, legal representatives of deceased inventors may make application for patent upon compliance with the requirements and on the same terms and conditions

applicable to the inventor. The "legal representative (executor, administrator, etc.) of the deceased inventor may make the necessary oath or declaration, and apply for and obtain the patent." 37 CFR 1.42.

The new declaration lists the information of Inventor Frazer and that of the legal representative of deceased inventor Jian Zhou, Xiao Yi Sun, in addition to the information of Jian Zhou. The declaration complies with 37 CFR 1.497(a)-(b) and 37 CFR 1.42.

CONCLUSION

For the above reasons, the request for status under 37 CFR 1.42 is **GRANTED**.

The application has an international filing date of 13 December 1999 under 35 U.S.C. §363 and a date of 21 November 2002 under 35 U.S.C. §371. This application is being forwarded to the National Stage Processing Division of the Office of the PCT Operations for continued processing.

Boris Milef
PCT Legal Examiner
PCT Legal Administration

E. M. Pender
Erin M. Pender
Attorney Advisor
PCT Legal Administration

Telephone: (703) 305-0455
Facsimile: (703) 308-6459

SEP 0 6 2001

UNITED STATES PATENT AND TRADEMARK OFFICE

COMMISSIONER FOR PATENTS
UNITED STATES PATENT AND TRADEMARK OFFICE
WASHINGTON, D.C. 20231
www.uspto.gov

Patricia A. Sheehan
Cesari and McKenna, LLP
88 Black Falcon Avenue
Boston, MA 02210

In re Application of AISA, Valerio Application No.: 09/868,020 PCT No.: PCT/IB99/01593 Int. Filing Date: 29 September 1999 Priority Date: 30 September 1998 Attorney Docket No.: 108041-7 For: SYSTEM FOR PROGRAMMING A HOUSEHOLD APPLIANCE HAVING AN ELECTRONIC CONTROL	: : : : : : :	DECISION ON PETITION UNDER 37 CFR 1.137(b)

The petition to revive under 37 CFR 1.137(b) filed 12 June 2001 in the above-captioned application is hereby **GRANTED** as follows:

Applicant's statement that the "the entire delay in filing the required reply from the due date for the reply until the filing of a grantable petition under 37 CFR 1.137(b) was unintentional" meets the requirements of 37 CFR 1.137(b)(3).

A review of the application file reveals that applicant has submitted the basic national fee of $860 and the requirements of 37 CFR 1.137(b) have been satisfied. Therefore, the request to revive the application abandoned under 35 U.S.C. 371(d) is granted as to the National stage in the United States of America.

Deposit Account No. 03-1237 has been charged a $130.00 surcharge fee under 37 CFR 492(e) for supplying an oath or declaration later than 30 months from the earliest claimed priority date.

This application is being returned to the United States Designated/Elected Office for processing in accordance with this decision. The 35 U.S.C. 371(c) and 102(e).date is **12 June 2001**.

Anthony Smith

Anthony Smith
Attorney-Advisor
PCT Legal Office
Telephone: (703) 308-6314
Facsimile: (703) 308-6459

SEP 21 2001

UNITED STATES PATENT AND TRADEMARK OFFICE

COMMISSIONER FOR PATENTS
UNITED STATES PATENT AND TRADEMARK OFFICE
WASHINGTON, D.C. 20231
www.uspto.gov

Peter K. Skiff
Burns, Doane, Swecker & Mathis, L.L.P.
P.O. Box 1404
Alexandria, VA 22313-1404

In re Application of KOLLER et al. Application No.: 09/868,069 PCT No.: PCT/US99/25427 Int. Filing Date: 29 October 1999 Priority Date: 29 October 1998 Attorney Docket No.: 021238-466 For: FILTER FOR SELECTIVE REMOVAL OF A GASEOUS COMPONENT	DECISION ON PETITION UNDER 37 CFR 1.137(b)

This decision is in response to applicant's "PETITION FOR REVIVAL OF AN INTERNATIONAL APPLICATION FOR PATENT DESIGNATING THE U.S. ABANDONED UNINTENTIONALLY UNDER 37 CFR 1.137(b)" filed 14 June 2001.

BACKGROUND

On 29 October 1999, applicants filed international application PCT/US99/25427, which claimed a priority date of 29 October 1998. A copy of the international application was communicated to the United States Patent and Trademark Office (USPTO) from the International Bureau on 11 May 2000. A Demand for international preliminary examination, in which the United States was elected, was filed on 25 May 2000, which was within nineteen months from the priority date. Accordingly, the thirty-month period for paying the basic national fee in the United States expired at midnight on 30 April 2001 (29 April 2001 being a Sunday).

On 14 June 2001, applicants filed, *inter alia*, a submission for entry into the national stage in the United States which was accompanied by, *inter alia*, the U.S. Basic National Fee and the instant "PETITION FOR REVIVAL OF AN INTERNATIONAL APPLICATION FOR PATENT DESIGNATING THE U.S. ABANDONED UNINTENTIONALLY UNDER 37 CFR 1.137(b)".

DISCUSSION

A petition to revive the present application under 37 CFR 1.137(b) must include:

(1) The required reply;

(2) The petition fee;
(3) A statement that the entire delay in filing the required reply from the due date for the reply until the filing of a grantable petition was unintentional.

As to item (1), applicants submitted the basic national fee on 14 June 2001.

As to item (2), applicants submitted the petition fee of $1,240.00 on 14 June 2001.

With regard to item (3), petitioner has provided the required statement.

A review of the application file reveals that, with the filing of the present petition and accompanying papers, a proper response has been submitted and all of the requirements of 37 CFR 1.137(b) for revival have been satisfied and revival is therefore appropriate.

CONCLUSION

The petition under 37 CFR 1.137(b) is **GRANTED** for the reasons set forth above.

Please direct any further correspondence with respect to this matter to the Commissioner of Patents and Trademarks, Box PCT, Washington, D.C. 20231, and address the contents of the letter to the attention of the Office of PCT Legal Administration.

This application is being forwarded to the National Stage Processing Branch of the Office of PCT Operations to continue national stage processing of the application including preparing and mailing a NOTIFICATION OF MISSING REQUIREMENTS (Form PCT/DO/EO/905) requiring an oath or declaration in compliance with 37 CFR 1.497(a)-(b) and the surcharge under 37 CFR 1.492(e) for providing the oath or declaration later than thirty months from the priority date.

Daniel Stemmer
Legal Examiner
PCT Legal Affairs
Office of Patent Cooperation Treaty
Legal Administration
Telephone: (703) 308-2066
Facsimile: (703) 308-6459

UNITED STATES PATENT AND TRADEMARK OFFICE

Commissioner for Patents
United States Patent and Trademark Office
P.O. Box 1450
Alexandria, VA 22313-1450
www.uspto.gov

BURNS DOANE SWECKER & MATHIS L L P
POST OFFICE BOX 1404
ALEXANDRIA, VA 22313-1404

COPY MAILED

OCT 0 7 2004

OFFICE OF PETITIONS

In re Application of
Kent B. Koller, et al. :
Application No. 09/868,069 : ON PETITION
Filed: January 28, 2002 :
Attorney Docket No. 021238-466 :

This is a decision on the petition under 37 CFR 1.313(c)(2) to withdraw the above-identified application from issue after payment of the issue fee, filed October 1, 2004.

The petition is **GRANTED**.

The above-identified application is withdrawn from issue for consideration of a submission under 37 CFR 1.114 (request for continued examination). See 37 CFR 1.313(c)(2).

Petitioner is advised that the issue fee paid August 17, 2004, in the above-identified application cannot be refunded. If, however, the above-identified application is again allowed, petitioner may request that it be applied towards the issue fee required by the new Notice of Allowance. [1]

Telephone inquiries relating to this decision should be directed to the undersigned at (703) 305-9220.

The application is being referred to Technology Center AU 1754 for further processing of the request for continued examination under 37 CFR 1.114 filed October 1, 2004.

Sherry D Brinkley

Sherry D. Brinkley
Petitions Examiner
Office of Petitions
Office of the Deputy Commissioner
for Patent Examination Policy

[1]The request to apply the issue fee to the new Notice may be satisfied by completing and returning the new Issue Fee Transmittal Form PTOL-85(b), which includes the following language thereon: "Commissioner for Patents is requested to apply the Issue Fee and Publication Fee (if any) or re-apply any previously paid issue fee to the application identified above." Petitioner is advised that, whether a fee is indicated as being due or not, the Issue Fee Transmittal Form **must** be completed and timely submitted to avoid abandonment. Note the language in bold text on the first page of the Notice of Allowance and Fee(s) Due (PTOL-85).

UNITED STATES PATENT AND TRADEMARK OFFICE

Commissioner for Patents
United States Patent and Trademark Office
P.O. Box 1450
Alexandria, VA 22313-1450
www.uspto.gov

MAILED

MAY 14 2010

OFFICE OF PETITIONS

LANDO & ANASTASI, LLP
ONE MAIN STREET, SUITE 1100
CAMBRIDGE MA 02142

In re Patent No. 7,507,706	:	
Issue Date: March 24, 2009	:	
Application No. 09/868,123	:	DECISION ON PETITION
Filed: April 2, 2002	:	
Attorney Docket No. W2023-7013/G15268A2	:	

This is a decision on the Request For Issuance To Co-Assignee Under 37 C.F.R. §3.81(b), filed April 14, 2010, requesting correction on the Title Page of the subject patent, via issuance of a Certificate of Correction under 37 CFR 1.323, to add a second assignee's name. The Request is being treated as a Petition. A completed Certificate of Correction Form (PTO/SB/44) was submitted the petition.

The petition under 37 CFR §3.81 is **DISMISSED**.

Petitioner urges that the present Petition was submitted to include the second assignee's name on the previously submitted PTOL-85B and that such omission was inadvertently omitted on form PTOL-85B. Accordingly, petitioner requests, in effect, that the Title Page of the above-identified patent be corrected, via issuance of a Certificate of Correction (PTO/SB/44), to add the inadvertently omitted second assignee's name as follows:

> "The John Hopkins University, Baltimore, MD (US)".

37 CFR 3.81(b), effective June 25, 2004, reads:

> *After payment of the issue fee:* Any request for issuance of an application in the name of the assignee submitted after the date of payment of the issue fee, and any request for a patent to be corrected to state the name of the assignee, must state that the assignment was submitted for recordation as set forth in § 3.11 before issuance of the patent, and must include a request for a certificate of correction under § 1.323 of this chapter (accompanied by the fee set forth in § 1.20(a) and the processing fee set forth in § 1.17(i) of this chapter.

U.S. Patent and Trademark Office assignments records disclose that an assignment *The Johns Hopkins University* was recorded on May 4, 2010. Therefore, the recorded assignment was **after the date of issuance of this patent**. Accordingly, since the assignment was not submitted for recordation until after issuance of this patent, issuance of a certification of correction would not be proper. Also, the petitioner argues that "The "continuations" and "continuing applications" include continuation-in-part applications ... should be transferable to the present continuation-in-part application", however, it is not relevant to transfer assignments to continuation-in-part applications. ***See MPEP 306***.

Inquiries related this communication should be directed to Cheryl Gibson-Baylor at (571)272-3213.

Brian W. Brown
Petitions Examiner
Office of Petitions

2 4 JUN 2003
UNITED STATES PATENT AND TRADEMARK OFFICE

#5

COMMISSIONER FOR PATENTS
UNITED STATES PATENT AND TRADEMARK OFFICE
ALEXANDRIA, A 22313-1450
www.uspto.gov

Glenn Patent Group
3475 Edison Way
Suite L
Menlo Park, CA 94025

In re Application of	:	
Neumeier et al.	:	
Application No. 09/868,156	:	
PCT No.: PCT/EP99/07204	:	
Int. Filing Date: 29 September 1999	:	DECISION
Priority Date: 15 December 1998	:	
Atty. Docket No.: SCHO0059	:	
For: Method Of Producing A Micro-	:	
Electromechanical Element	:	

This is in response to the petition for revival filed on 13 January 2003. The submission has been treated as a petition under 37 CFR 1.181 requesting withdrawal of the holding of abandonment.

BACKGROUND

This international application was filed on 29 September 1999 and claimed an earlier priority date of 15 December 1998. The International Bureau transmitted a copy of the published international application to the USPTO on 22 June 2000. A Demand electing the United States was filed prior to the elapse of 19 months from the priority date. Accordingly, the 30 month time period for paying the basic national fee in the United States expired at midnight on 15 June 2001.

On 12 June 2001, applicants filed, *inter alia*, the basic national fee.

On 23 July 2001, a Notification of Missing Requirements (Form PCT/DO/EO/905) was mailed to applicants, requiring an executed oath or declaration of the inventors and a surcharge under 37 CFR 1.492(e).

On 21 November 2002, a Notification of Abandonment (Form PCT/DO/EO/909) was mailed to applicants, indicating that this international application had become abandoned with respect to the United States for failure to timely reply to the Notification of Missing Requirements.

DISCUSSION

Applicants urge that, on 14 September 2001, a timely response was filed to the Notification of Missing Requirements of 23 July 2001. In support of this assertion, applicants provide a copy of a return postcard receipt, stamped as "Rec'd PCT/PTO 14 SEP 2001," and

itemizing inter alia an "Oath/Declaration/Power of Attorney," as well as "a copy of the response." MPEP 503 states in part that "A postcard receipt which itemizes and properly identifies the papers which are being filed serves as *prima facie* evidence of receipt in the PTO of all the items listed thereon on the date stamped thereon by the PTO." Accordingly, the papers filed with the petition are accepted as copies of the corresponding papers as itemized on the postcard receipt and filed on 14 September 2001. The correspondence filed on 14 September 2001 included an executed declaration of the inventors and a surcharge under 37 CFR 1.492(e). As such, applicants timely replied to the Notification of Missing Requirements mailed on 23 July 2001. Accordingly, it would be appropriate to withdraw the holding of abandonment.

DECISION

The petition is **GRANTED**.

The holding of abandonment is hereby **WITHDRAWN** and the Notification of Abandonment mailed on 21 November 2002 is **VACATED**.

This application is being forwarded to the National Stage Processing Branch for further processing. The date of this application under 35 U.S.C. 371 (c) (1), (2) and (4) is **14 September 2001**.

Richard Cole
PCT Legal Examiner
PCT Legal Office

George M. Dombroske
PCT Legal Examiner
PCT Legal Office
Tel: (703) 308-6721
Fax: (703) 308-6459

Approved for use through 04/30/2009. OMB 0651-0016
U.S. Patent and Trademark Office: U.S. DEPARTMENT OF COMMERCE
Under the Paperwork Reduction Act of 1995, no persons are required to respond to a collection of information unless it displays valid OMB control number.

PETITION TO ACCEPT UNINTENTIONALLY DELAYED PAYMENT OF MAINTENANCE FEE IN AN EXPIRED PATENT (37 CFR 1.378(c))

Patent Number	Issue Date (YYYY-MM-DD)	Application Number	Filing Date (YYYY-MM-DD)	Docket Number (if applicable)
6,661,108	2003-12-09	09/868,233	2001-08-20	GOT 142NP

CAUTION: Maintenance fee (and surcharge, if any) payment must correctly identify: (1) the patent number and (2) the application number of the actual U.S. application leading to issuance of that patent to ensure the fee(s) is/are associated with the correct patent. 37 CFR 1.366(c) and (d).

SMALL ENTITY
☐ Patentee claims, or has previously claimed, small entity status. See 37 CFR 1.27.

LOSS OF ENTITLEMENT TO SMALL ENTITY STATUS
☐ Patentee is no longer entitled to small entity status. See 37 CFR 1.27(g)

NOT Small Entity		Small Entity	
Fee	Code	Fee	Code
◉ 3 ½ year	(1551)	○ 3 ½ year	(2551)
○ 7 ½ year	(1552)	○ 7 ½ year	(2552)
○ 11 ½ year	(1553)	○ 11 ½ year	(2553)

SURCHARGE
The surcharge required by 37 CFR 1.20(i)(2) (Fee Code 1558) must be paid as a condition of accepting unintentionally delayed payment of the maintenance fee.

MAINTENANCE FEE (37 CFR 1.20(e)-(g))
The appropriate maintenance fee must be submitted with this petition.

STATEMENT
THE UNDERSIGNED CERTIFIES THAT THE DELAY IN PAYMENT OF THE MAINTENANCE FEE TO THIS PATENT WAS UNINTENTIONAL

PETITIONER(S) REQUEST THAT THE DELAYED PAYMENT OF THE MAINTENANCE FEE BE ACCEPTED AND THE PATENT REINSTATED

THIS PORTION MUST BE COMPLETED BY THE SIGNATORY OR SIGNATORIES

37 CFR 1.378(d) states: "Any petition under this section must be signed by an attorney or agent registered to practice before the Patent and Trademark Office, or by the patentee, the assignee, or other party in interest."

I certify, in accordance with 37 CFR 1.4(d)(4) that I am

◉ An attorney or agent registered to practice before the Patent and Trademark Office

○ A sole patentee

○ A joint patentee; I certify that I am authorized to sign this submission on behalf of all the other patentees.

○ A joint patentee; all of whom are signing this e-petition

○ The assignee of record of the entire interest

Patent Practitioner			
A signature of the applicant or representative is required in accordance with 37 CFR 1.33 and 10.18. Please see 37 CFR 1.4(d) for the form of the signature			
Signature	/Robert H. Berdo, Jr./	Date (YYYY-MM-DD)	2008-11-17
Name	Robert H. Berdo, Jr.	Registration Number	38075

This collection of information is required by 37 CFR 1.378(c). The information is required to obtain or retain a benefit by the public which is to file (and by the USPTO to process) an application. Confidentiality is governed by 35 U.S.C. 122 and 37 CFR 1.11 and 1.14. This collection is estimated to take 1 hour to complete, including gathering, preparing, and submitting the completed application form to the USPTO. Time will vary depending upon the individual case. Any comments on the amount of time you require to complete this form and/ or suggestions for reducing this burden, should be sent to the Chief Information Officer, U.S. Patent and Trademark Office, U.S. Department of Commerce, P.O. Box 1450, Alexandria, VA 22313-1450. DO NOT SEND FEES OR COMPLETED FORMS TO THIS ADDRESS. **This form can only be used when in conjunction with EFS-Web. If this form is mailed to the USPTO, it may cause delays in reinstating the patent.**

Privacy Act Statement

The Privacy Act of 1974 (P.L. 93-579) requires that you be given certain information in connection with your submission of the attached form related to a patent application or patent. Accordingly, pursuant to the requirements of the Act, please be advised that: (1) the general authority for the collection of this information is 35 U.S.C. 2(b)(2); (2) furnishing of the information solicited is voluntary; and (3) the principal purpose for which the information is used by the U.S. Patent and Trademark Office is to process and/or examine your submission related to a patent application or patent. If you do not furnish the requested information, the U.S. Patent and Trademark Office may not be able to process and/or examine your submission, which may result in termination of proceedings or abandonment of the application or expiration of the patent.

The information provided by you in this form will be subject to the following routine uses:

1. The information on this form will be treated confidentially to the extent allowed under the Freedom of Information Act (5 U.S.C. 552) and the Privacy Act (5 U.S.C. 552a). Records from this system of records may be disclosed to the Department of Justice to determine whether the Freedom of Information Act requires disclosure of these record s.

2. A record from this system of records may be disclosed, as a routine use, in the course of presenting evidence to a court, magistrate, or administrative tribunal, including disclosures to opposing counsel in the course of settlement negotiations.

3. A record in this system of records may be disclosed, as a routine use, to a Member of Congress submitting a request involving an individual, to whom the record pertains, when the individual has requested assistance from the Member with respect to the subject matter of the record.

4. A record in this system of records may be disclosed, as a routine use, to a contractor of the Agency having need for the information in order to perform a contract. Recipients of information shall be required to comply with the requirements of the Privacy Act of 1974, as amended, pursuant to 5 U.S.C. 552a(m).

5. A record related to an International Application filed under the Patent Cooperation Treaty in this system of records may be disclosed, as a routine use, to the International Bureau of the World Intellectual Property Organization, pursuant to the Patent Cooperation Treaty.

6. A record in this system of records may be disclosed, as a routine use, to another federal agency for purposes of National Security review (35 U.S.C. 181) and for review pursuant to the Atomic Energy Act (42 U.S.C. 218(c)).

7. A record from this system of records may be disclosed, as a routine use, to the Administrator, General Services, or his/her designee, during an inspection of records conducted by GSA as part of that agency's responsibility to recommend improvements in records management practices and programs, under authority of 44 U.S.C. 2904 and 2906. Such disclosure shall be made in accordance with the GSA regulations governing inspection of records for this purpose, and any other relevant (i.e., GSA or Commerce) directive. Such disclosure shall not be used to make determinations about individuals.

8. A record from this system of records may be disclosed, as a routine use, to the public after either publication of the application pursuant to 35 U.S.C. 122(b) or issuance of a patent pursuant to 35 U.S.C. 151. Further, a record may be disclosed, subject to the limitations of 37 CFR 1.14, as a routine use, to the public if the record was filed in an application which became abandoned or in which the proceedings were terminated and which application is referenced by either a published application, an application open to public inspections or an issued patent.

9. A record from this system of records may be disclosed, as a routine use, to a Federal, State, or local law enforcement agency, if the USPTO becomes aware of a violation or potential violation of law or regulation.

UNITED STATES PATENT AND TRADEMARK OFFICE

Commissioner for Patents
United States Patent and Trademark Office
P.O. Box 1450
Alexandria, VA 22313-1450
www.uspto.gov

In re Patent No. 6661108
Issue Date: December 9,2003
Application No. 09868233
Filed: August 20,2001
Attorney Docket No. GOT 142 NP

:
:DECISION GRANTING PETITION
:UNDER 37 CFR 1.378(c)
:

This is a decision on the electronic petition, filed November 17,2008 ,under 37 CFR 1.378(c) to accept the unintentionally delayed payment of the 3.5 year maintenance fee for the above-identified patent.

The petition is **GRANTED**.

The maintenance fee is accepted, and the above-identified patent reinstated as of November 17,2008 . This decision also constitutes notice that the fee has been accepted. An electronic copy of the petition and this decision has been created as an entry in the Image File Wrapper. Nevertheless, petitioner should print and retain an independent copy.

Telephone inquiries related to this electronic decision should be directed to the Electronic Business Center at 1-866-217-9197.

FEB 1 9 2002

UNITED STATES PATENT AND TRADEMARK OFFICE

COMMISSIONER FOR PATENTS
UNITED STATES PATENT AND TRADEMARK OFFICE
WASHINGTON, D.C. 20231
www.uspto.gov

Therese A. Hendricks
Finnegan, Henderson, Farabow, Garrett & Dunner, LLP
1300 I Street, N.W.
Washington, D.C. 20005

In re Application of
HEEKS et al.
Application No.: 09/868,262
PCT No.: PCT/GB99/04144
Int. Filing Date: 14 December 1999
Priority Date: 17 December 1998
Attorney Docket No.: 083513.7034
For: ORGANIC LIGHT-EMITTING DEVICES

DECISION ON REQUEST
UNDER 37 CFR 1.497(d)

This decision is in response to "Submission of Oath or Declaration under 37 CFR 1.497" filed 03 January 2002.

BACKGROUND

On 14 December 1999, applicants filed the above-captioned international application, which claimed a priority date of 17 December 1998 and designated the United States. A copy of the international application was communicated to the United States Patent and Trademark Office from the International Bureau on 22 June 2000. The international application named Stephen Karl Heeks, Jeremy Henley Burroughes, and Julian Charles Carter. A Demand for international preliminary examination was filed prior to 19 months from the priority date. Accordingly, the thirty-month period for paying the basic national fee expired at midnight on 17 June 2001.

On 15 June 2001, applicants filed a transmittal letter for entry into the national stage in the United States which was accompanied by, *inter alia*, a basic national fee of $860.

On 05 September 2001, the United States Designated/Elected Office (DO/EO/US) mailed a Notification of Missing Requirements (Form PCT/DO/EO/905) requiring an oath or declaration in compliance with 37 CFR 1.497(a) and (b).

On 03 January 2002, applicants filed "Submission of Oath or Declaration under 37 CFR 1.497" which included: a declaration executed by Stephen Karl Heeks, Jeremy Henley

Burroughes, Julian Charles Carter and Peter Devine; $130 surcharge under 37 CFR 1.492(e); two-month extension of time fee ($400); and an assigment.

DISCUSSION

In the instant case, the international application named Stephen Karl Heeks, Jeremy Henley Burroughes, and Julian Charles Carter as applicants/inventors. Applicants request to add Peter Devine as an applicant/inventor. In order to correct an error in naming the inventor(s) made during the international stage in the national stage, a submission under 37 CFR 1.497(d) is required.

A submission under 37 CFR 1.497(d) to correct an error in naming inventorship requires:

(1) a statement from each person being added or deleted as an inventor that the error in inventorship occurred without any deceptive intention on his or her part;

(2) an oath or declaration by the actual inventor(s) as required by 37 CFR 1.497(a);

(3) the fee set forth in 37 CFR 1.17(i); and

(4) if an assignment has been executed by any of the original named inventors, the written consent of the assignee in compliance with 37 CFR 3.73(b).

Applicants have satisfied items (1) and (2).

Regarding Item (3), Deposit Account No 06-0916 has been charged the processing fee of $130 as set forth in 37 CFR 1.17(i).

Further, in order to satisfy item (4), applicants are required to submit a written consent of assignee to the correction in inventorship in compliance with 37 CFR 3.73(b), since the instant application has been assigned to Cambridge Display Technologies, Inc.

CONCLUSION

For the reasons discussed above, applicants' request under 37 CFR 1.497(d) is **DISMISSED** without prejudice.

A proper response must be filed within **TWO (2) MONTHS** from the mail date of this decision. Extensions of time may be obtained under 37 CFR 1.136(a).

A proper response must include a written consent of assignee in compliance with 37 CFR 3.73(b).

Please direct further correspondence with respect to this matter to the Assistant Commissioner for Patents, Box PCT, Washington, D.C. 20231, and address the contents of the letter to the attention of the PCT Legal Office.

Boris Milef
PCT Legal Examiner
PCT Legal Office

Anthony Smith
Attorney-Advisor
PCT Legal Office
Telephone: (703) 308-6314
Facsimile: (703) 308-6459

14 JUN 2002

UNITED STATES PATENT AND TRADEMARK OFFICE

COMMISSIONER FOR PATENTS
UNITED STATES PATENT AND TRADEMARK OFFICE
WASHINGTON, D.C. 20231
www.uspto.gov

Therese A. Hendricks
Finnegan, Henderson, Farabow, Garrett & Dunner, LLP
1300 I Street, N.W.
Washington, D.C. 20005

In re Application of	:	
HEEKS et al.	:	
Application No.: 09/868,262	:	DECISION ON REQUEST
PCT No.: PCT/GB99/04144	:	UNDER 37 CFR 1.497(d)
Int. Filing Date: 14 December 1999	:	
Priority Date: 17 December 1998	:	
Attorney Docket No.: 083513.7034	:	
For: ORGANIC LIGHT-EMITTING DEVICES		

This decision is in response to "Response to Decision on Request under 37 CFR 1.497(d) Dated February 19, 2002" filed 19 April 2002.

BACKGROUND

On 14 December 1999, applicants filed the above-captioned international application, which claimed a priority date of 17 December 1998 and designated the United States. A copy of the international application was communicated to the United States Patent and Trademark Office from the International Bureau on 22 June 2000. The international application named Stephen Karl Heeks, Jeremy Henley Burroughes, and Julian Charles Carter. A Demand for international preliminary examination was filed prior to 19 months from the priority date. Accordingly, the thirty-month period for paying the basic national fee expired at midnight on 17 June 2001.

On 15 June 2001, applicants filed a transmittal letter for entry into the national stage in the United States which was accompanied by, *inter alia*, a basic national fee of $860.

On 05 September 2001, the United States Designated/Elected Office (DO/EO/US) mailed a Notification of Missing Requirements (Form PCT/DO/EO/905) requiring an oath or declaration in compliance with 37 CFR 1.497(a) and (b).

On 03 January 2002, applicants filed "Submission of Oath or Declaration under 37 CFR 1.497" which included: a declaration executed by Stephen Karl Heeks, Jeremy Henley Burroughes, Julian Charles Carter and Peter Devine; $130 surcharge under 37 CFR 1.492(e); two-month extension of time fee ($400); and an assignment. In a decision dated 19 February 2002, applicants' request was dismissed without prejudice.

On 19 April 2002, applicants filed the present request which included: a consent of assignee; executed assignment and cover sheet; and a copy of the declaration filed 03 January 2002.

DISCUSSION

In the instant case, the international application named Stephen Karl Heeks, Jeremy Henley Burroughes, and Julian Charles Carter as applicants/inventors. Applicants request to add Peter Devine as an applicant/inventor. In order to correct an error in naming the inventor(s) made during the international stage in the national stage, a submission under 37 CFR 1.497(d) is required.

A submission under 37 CFR 1.497(d) to correct an error in naming inventorship requires:

(1) a statement from each person being added or deleted as an inventor that the error in inventorship occurred without any deceptive intention on his or her part;

(2) an oath or declaration by the actual inventor(s) as required by 37 CFR 1.497(a);

(3) the fee set forth in 37 CFR 1.17(i); and

(4) if an assignment has been executed by any of the original named inventors, the written consent of the assignee in compliance with 37 CFR 3.73(b).

Items (1), (2) and (3) have been satisfied.

In regard to item (4) above, the written consent of the assignee is not acceptable. The consent of assignee is executed by the "C.T.O." and the petition does not aver that "C.T.O." has the authority to provide consent for the assignee. Therefore, applicants are requested to file an additional written consent of the assignee that provides the name and title of the individual with authority to act on behalf of the assignee. Section 201.03 of the M.P.E.P states in part that:

> "The title of the party signing on behalf of a corporate assignee and the authority to do so should be set forth in the written consent. Consent of a corporate assignee may be signed by an officer (e.g., president, vice president, secretary, or treasurer) of the corporation or may include a statement in oath or declaration form that the person signing the consent has authority to do so. Further the assignee must establish its ownership of the application in accordance with 37 CFR 3.73."

For the reasons discussed above, it is inappropriate, at this time, to grant applicants request for correction of inventorship.

CONCLUSION

For the reasons discussed above, applicants' request under 37 CFR 1.497(d) is **DISMISSED** without prejudice.

A proper response must be filed within **TWO (2) MONTH** from the mail date of this decision. A proper response must include a written consent of assignee in compliance with 37 CFR 3.73(b). Failure to file a proper response in a timely manner will result in ABANDONMENT of the application. Extensions of time may be obtained under 37 CFR 1.136(a).

Any further correspondence with respect to this matter should be addressed to the Assistant Commissioner for Patents, Box PCT, Washington, D.C. 20231, with the contents of the letter marked to the attention of the PCT Legal Office.

Boris Milef
PCT Legal Examiner
PCT Legal Office

Anthony Smith
Attorney-Advisor
PCT Legal Office
Telephone: (703) 308-6314
Facsimile: (703) 308-6459

25 OCT 2002

UNITED STATES PATENT AND TRADEMARK OFFICE

COMMISSIONER FOR PATENTS
UNITED STATES PATENT AND TRADEMARK OFFICE
WASHINGTON, D.C. 20231
www.uspto.gov

Therese A. Hendricks
Finnegan, Henderson, Farabow, Garrett & Dunner, LLP
1300 I Street, N.W.
Washington, D.C. 20005

In re Application of	:	
HEEKS et al.	:	
Application No.: 09/868,262	:	DECISION ON REQUEST
PCT No.: PCT/GB99/04144	:	UNDER 37 CFR 1.497(d)
Int. Filing Date: 14 December 1999	:	
Priority Date: 17 December 1998	:	
Attorney Docket No.: 083513.7034	:	
For: ORGANIC LIGHT-EMITTING DEVICES		

This decision is in response to "Response to Decision on Request under 37 CFR 1.497(d) Dated June 14, 2002" filed 12 September 2002.

BACKGROUND

On 14 December 1999, applicants filed the above-captioned international application, which claimed a priority date of 17 December 1998 and designated the United States. A copy of the international application was communicated to the United States Patent and Trademark Office from the International Bureau on 22 June 2000. The international application named Stephen Karl Heeks, Jeremy Henley Burroughes, and Julian Charles Carter. A Demand for international preliminary examination was filed prior to 19 months from the priority date. Accordingly, the thirty-month period for paying the basic national fee expired at midnight on 17 June 2001.

On 15 June 2001, applicants filed a transmittal letter for entry into the national stage in the United States which was accompanied by, *inter alia*, a basic national fee of $860.

On 05 September 2001, the United States Designated/Elected Office (DO/EO/US) mailed a Notification of Missing Requirements (Form PCT/DO/EO/905) requiring an oath or declaration in compliance with 37 CFR 1.497(a) and (b).

On 03 January 2002, applicants filed "Submission of Oath or Declaration under 37 CFR 1.497" which included: a declaration executed by Stephen Karl Heeks, Jeremy Henley Burroughes, Julian Charles Carter and Peter Devine; $130 surcharge under 37 CFR 1.492(e); two-month extension of time fee ($400); and an assignment. In a decision dated 19 February 2002, applicants' request was dismissed without prejudice.

On 19 April 2002, applicants filed "Response to Decision on Request under 37 CFR 1.497(d) Dated February 19, 2002" which included: a consent of assignee; executed assignment and cover sheet; and a copy of the declaration filed 03 January 2002. In a decision dated 14 June 2002, applicants' request was dismissed without prejudice.

On 12 September 2002, applicants filed "Response to Decision on Request under 37 CFR 1.497(d) Dated June 14, 2002."

DISCUSSION

In the instant case, the international application named Stephen Karl Heeks, Jeremy Henley Burroughes, and Julian Charles Carter as applicants/inventors. Applicants request to add Peter Devine as an applicant/inventor. In order to correct an error in naming the inventor(s) made during the international stage in the national stage, a submission under 37 CFR 1.497(d) is required.

A submission under 37 CFR 1.497(d) to correct an error in naming inventorship requires:

(1) a statement from each person being added or deleted as an inventor that the error in inventorship occurred without any deceptive intention on his or her part;

(2) an oath or declaration by the actual inventor(s) as required by 37 CFR 1.497(a);

(3) the fee set forth in 37 CFR 1.17(i); and

(4) if an assignment has been executed by any of the original named inventors, the written consent of the assignee in compliance with 37 CFR 3.73(b).

Items (1), (2) and (3) have been satisfied.

In regards to item (4), applicants have submitted a written consent of assignee to the correction in inventorship in compliance with 37 CFR 3.73(b).

CONCLUSION

The request under 37 CFR 1.497(d) is **GRANTED**.

A review of the application papers reveals that applicants have completed all the requirements of 35 U.S.C. 371 for entry into the national stage. This application will be given an international application filing date of 14 December 1999 and a date of **03 January 2002** under 35 U.S.C. 371.

The application is being returned to the United States Designated/Elected Office for further processing in accordance with this decision.

Boris Milef
PCT Legal Examiner
PCT Legal Office

Anthony Smith
Attorney-Advisor
PCT Legal Office
Telephone: (703) 308-6314
Facsimile: (703) 308-6459

09 / 868283

SPE RESPONSE FOR CERTIFICATE OF CORRECTION

Paper No.: _____

DATE : 11/30/04

TO SPE OF : ART UNIT 1742

SUBJECT : Request for Certificate of Correction on Patent No.: 6758956 B1

A response is requested with respect to the accompanying request for a certificate of correction.

Please complete this form and return with file, within **7** days to:
Certificates of Correction Branch - PK 3-915
Palm location **7580** - Tel. No. 305-8309

With respect to the change(s) requested, correcting Office and/or Applicant's errors, should the patent read as shown in the certificate of correction? No new matter should be introduced, nor should the scope or meaning of the claims be changed.

Virginia Tolbert
Certificates of Correction Branch

Thank You For Your Assistance

The request for issuing the above-identified correction(s) is hereby:
Note your decision on the appropriate box.

- ☐ **Approved** — All changes apply.
- ☐ **Approved in Part** — Specify below which changes **do not** apply.
- ☒ **Denied** — State the reasons for denial below.

Comments:

The application was filed with claims 1-28. As filed, claim 14 was dependent on claim 13. On January 12, 2004, applicant cancelled claims 1-28 and added claims 29-53. New claims 41 and 42 corresponded to original claim 13 and 14. The Examiner's Amendment changed the dependency of claim 42 to be consistent with original claim 14. The patent is correct.

Roy Van Cing — **SPE**

1742 — **Art Unit**

UNITED STATES PATENT AND TRADEMARK OFFICE

Commissioner for Patents
United States Patent and Trademark Office
P.O. Box 1450
Alexandria, VA 22313-1450
www.uspto.gov

Date : August 30, 2005

Damon L. Boyd
SNELL & WILMER, LLP
One Arizona Center
400 East Van Buren
Phoenix, AZ 85004-2202

Patent No: 6758956 B1
Applicant: Kruse, et al.
Issued: July 6, 2004
Title: **METHOD FOR DARKENING A SUPERFICIAL LAYER WHICH CONTAINS ZINC AND WHICH IS OF A MATERIAL PIECE**

Request for Certificate of Correction:

Consideration had been given to your request for the issuance of a certificate of correction for the above-identified patent under the provisions of Rule 1.323.

The numbering of the claims and their dependency in the printed patent is in accordance with the renumbering of dependent claims by the examiner as described in M.P.E.P. 608.01(n).

Per the examiner "The application was filed with claims 1-28. As filed, claim 14 was dependent on claim 13. On January 12, 2004, applicant cancelled claims 1-28 and added claims 29-53. New claims 41 and 42 corresponded to original claims 13 and 14. The examiner's amendment changed the dependency of claim 42 to be consistent with original claim 14. The patent is correct".

In view of the foregoing, your request in these matters is hereby **denied.**

Virginia Tolbert
For Cecelia Newman, Supervisor
Decisions and Certificate of Correction
(703) 305-8309 or 308-9390 ext. 113

vt

UNITED STATES PATENT AND TRADEMARK OFFICE

Commissioner for Patents
United States Patent and Trademark Office
P.O. Box 1450
Alexandria, VA 22313-1450
www.uspto.gov

JJGJr: 07-06

Paper No: 11

COPY MAILED
JUL 1 0 2006
OFFICE OF PETITIONS

DYKEMA GOSSETT PLLC
FRANKLIN SQUARE
THIRD FLOOR WEST
1300 I STREET, NW
WASHINGTON DC 20005

In re Application of	:	
Farre	:	
Application No. 09/868,318	:	NOTICE
Filed: 14 August, 2001	:	
Patent No. 6,685,538	:	
Issued: 3 February, 2004	:	
Attorney Docket No. 66489-008-5	:	

This is a notice regarding the request for acceptance of a fee deficiency submission (properly considered under 37 C.F.R. §1.28) filed 13 December, 2005

Out of an abundance of caution, Petitioners always are reminded that those registered to practice *and* all others who make representations before the Office are reminded to inquire into the underlying facts of representations made to the Office and support averments with the appropriate documentation–since all owe to the Office the continuing duty to disclose.[1]

---

[1] See supplement of 17 June, 1999. The Patent and Trademark Office is relying on petitioner's duty of candor and good faith and accepting a statement made by Petitioner. See Changes to Patent Practice and Procedure, 62 Fed. Reg. at 53160 and 53178, 1203 Off. Gaz. Pat. Office at 88 and 103 (responses to comments 64 and 109)(applicant obligated under 37 C.F.R. §10.18 to inquire into the underlying facts and circumstances when providing statements to the Patent and Trademark Office).

Specifically, the regulations at 37 C.F.R. §10.18 provide:

§ 10.18 Signature and certificate for correspondence filed in the Patent and Trademark Office.
(a) For all documents filed in the Office in patent, trademark, and other non-patent matters, except for correspondence that is required to be

On September 1, 1998, the Court of Appeals for the Federal Circuit held that 37 C.F.R. §1.28(c) is the sole provision governing the time for correction of the erroneous payment of the issue fee as a small entity. See DH Technology v. Synergystex International, Inc. 154 F.3d 1333, 47 USPQ2d 1865 (Fed. Cir. Sept. 1, 1998).

The Office no longer investigates or rejects original or reissue applications under 37 C.F.R. §1.56. 1098 Off. Gaz. Pat. Office 502 (January 3, 1989). Therefore, nothing in this notice is intended to imply that an investigation was done.

Your fee deficiency submission under 37 C.F.R. §1.28 hereby is **ACCEPTED**

---

signed by the applicant or party, each piece of correspondence filed by a practitioner in the Patent and Trademark Office must bear a signature by such practitioner complying with the provisions of §1.4(d), §1.4(e), or § 2.193(c)(1) of this chapter.
(b) By presenting to the Office (whether by signing, filing, submitting, or later advocating) any paper, the party presenting such paper, whether a practitioner or non-practitioner, is certifying that—

(1) All statements made therein of the party's own knowledge are true, all statements made therein on information and belief are believed to be true, and all statements made therein are made with the knowledge that whoever, in any matter within the jurisdiction of the Patent and Trademark Office, knowingly and willfully falsifies, conceals, or covers up by any trick, scheme, or device a material fact, or makes any false, fictitious or fraudulent statements or representations, or makes or uses any false writing or document knowing the same to contain any false, fictitious or fraudulent statement or entry, shall be subject to the penalties set forth under 18 U.S.C. 1001, and that violations of this paragraph may jeopardize the validity of the application or document, or the validity or enforceability of any patent, trademark registration, or certificate resulting therefrom; and

(2) To the best of the party's knowledge, information and belief, formed after an inquiry reasonable under the circumstances, that —

(i) The paper is not being presented for any improper purpose, such as to harass someone or to cause unnecessary delay or needless increase in the cost of prosecution before the Office;

(ii) The claims and other legal contentions therein are warranted by existing law or by a nonfrivolous argument for the extension, modification, or reversal of existing law or the establishment of new law;

(iii) The allegations and other factual contentions have evidentiary support or, if specifically so identified, are likely to have evidentiary support after a reasonable opportunity for further investigation or discovery; and

(iv) The denials of factual contentions are warranted on the evidence, or if specifically so identified, are reasonably based on a lack of information or belief.

(c) Violations of paragraph (b)(1) of this section by a practitioner or non-practitioner may jeopardize the validity of the application or document, or the validity or enforceability of any patent, trademark registration, or certificate resulting therefrom. Violations of any of paragraphs (b)(2)(i) through (iv) of this section are, after notice and reasonable opportunity to respond, subject to such sanctions as deemed appropriate by the Commissioner, or the Commissioner's designee, which may include, but are not limited to, any combination of —

(1) Holding certain facts to have been established;
(2) Returning papers;
(3) Precluding a party from filing a paper, or presenting or contesting an issue;
(4) Imposing a monetary sanction;
(5) Requiring a terminal disclaimer for the period of the delay; or
(6) Terminating the proceedings in the Patent and Trademark Office.

(d) Any practitioner violating the provisions of this section may also be subject to disciplinary action. See § 10.23(c)(15).
[Added 50 FR 5175, Feb. 6, 1985, effective Mar. 8, 1985; para. (a) revised, 58 FR 54494, Oct. 22, 1993, effective Nov. 22, 1993; paras. (a) & (b) revised, paras. (c) & (d) added, 62 FR 53131, Oct. 10, 1997, effective Dec. 1, 1997; para. (a) revised, 69 FR 56481, Sept. 21, 2004, effective Oct. 21, 2004]

Inquiries regarding this application should be directed to the Technology Center. The general phone number for the Office of Petitions which should be used for status requests is (571) 272-3282.

John J. Gillon, Jr.
Senior Attorney
Office of Petitions

SPE RESPONSE FOR CERTIFICATE OF CORRECTION

Paper No.: _____

DATE : 12/21/06

TO SPE OF : ART UNIT 1624

SUBJECT : Request for Certificate of Correction for Appl. No.: **09/868356** Patent No.: **7084135**

Please respond to this request for a certificate of correction within 7 days.

Please review the requested changes/corrections as shown in the **COCIN** document(s) in the IFW application image. No new matter should be introduced, nor should the scope or meaning of the claims be changed.

Please complete the response (see below) and forward the completed response to scanning using document code **COCX**.

Angela Green
Certificates of Correction Branch
703.308.9380 ext. 123

Thank You For Your Assistance

The request for issuing the above-identified correction(s) is hereby:
Note your decision on the appropriate box.

- ☐ **Approved** — **All** changes apply.
- ☐ **Approved in Part** — Specify below which changes **do not** apply.
- ☑ **Denied** — State the reasons for denial below.

Comments: There is no variable R6 or R7, the variables are R^6 and R^7. Additionally the proposed change is not described in the specification with respect to the genus.

SPE

1624
Art Unit

UNITED STATES PATENT AND TRADEMARK OFFICE

Commissioner for Patents
United States Patent and Trademark Office
P.O. Box 1450
Alexandria, VA 22313-1450
www.uspto.gov

Date Mailed : January 23, 2007

Patent No. :7,084,135
Inventor :Thomas D. Gordon, et al.
Patent Issued :August 1, 2006
Docket No. :00537-188002

Re: Request for Certificate of Correction

Consideration has been given your request for the issuance of a certificate of correction for the above-identified patent under the provisions of Rule(s) 1.322.

Inspection of the application for the patent reveals, however, that in connection with the alleged error pertaining to claim 1 and claim 3 of which applicant has referred; there is no variable R6 or R7, the variables are R^6 and R^7. Additionally the proposed change is not described in the specification with respect to the genus. Accordingly, the patent with respect to applicants request is considered in accordance with the record in the Patent and Trademark Office.

In view of the foregoing applicants request in this matter is hereby denied. Any telephone inquiry concerning this communication should be directed to Ms. A. Green at (703) 308-9380 ext. 123.

Cecelia Newman
Decisions & Certificates
of Correction Branch
(703) 308-9390 or (703) 308-9380 ext. 123

Biomeasure Incorporated
27 Maple Street
Millford, MA 01757

CBN/arg

UNITED STATES PATENT AND TRADEMARK OFFICE

Commissioner for Patents
United States Patent and Trademark Office
P.O. Box 1450
Alexandria, VA 22313-1450
www.uspto.gov

Mailed: AUG 2 6 2004

BC
Paper Number

In re application of
Ampere Tseng
Serial No. 09/868,471
Filed: June 15, 2001
For: CRUCIBLE AND SPINDLE FOR A VARIABLE SIZE DROP DEPOSITION SYSTEM

DECISION ON PETITION

This is a response to the REQUEST TO WITHDRAW NOTICE OF ABANDONMENT originally filed May 12, 2004. The request asks that the abandonment, as set forth in the Notice of Abandonment of May 6, 2004, for failure to timely file a proper reply to the Office Communication mailed August 11, 2003. The requester asserts that a timely response in the form of an AMENDMENT was filed on February 11, 2004, along with a request for a three-month extension of time.

DECISION

The instant request has been accepted as a petition to withdraw the holding of abandonment under the provisions of 37 CFR 1.181 (no fee) - no abandonment-in-fact. A review of the USPTO application file reveals that applicant's response, AMENDMENT, was properly filed on February 11, 2004 in view of the fact that the originally filed papers having a certification of mailing of February 11, 2004 has been located in the USPTO electronic application file. Accordingly, any holding of abandonment is hereby vacated, and the application has been returned to pending status.

The application shall be forwarded to the examiner for processing and consideration of the papers filed February 11, 2004.

The Petition is **GRANTED**.

JMStone

Jacqueline Stone, Director
Technology Center 1700
Chemical and Materials Engineering

BAKER & BOTTS
30 ROCKEFELLER PLAZA
44th FLOOR
NEW YORK, NY 10112

UNITED STATES
PATENT AND
TRADEMARK OFFICE

#13

FEB 27 2003

UNDER SECRETARY OF COMMERCE FOR INTELLECTUAL PROPERTY
AND DIRECTOR OF THE UNITED STATES PATENT AND TRADEMARK OFFICE
WASHINGTON, D.C. 20231
WWW.USPTO.GOV

KEIL & WEINKAUF
1350 CONNECTICUT AVENUE, N.W.
WASHINGTON DC 20036

In re Application of	:
Klaus Schelberger et al	:
Serial No.: 09/868,515	: PETITION DECISION
Filed: June 18, 2001	:
Attorney Docket No.: OZ 0050/49651	:

This is in response to applicants' petition under 37 CFR 1.181, filed December 30, 2002 (Certificate of Mailing dated December 23, 2002), requesting reversal of the examiner's decision not to enter the amendments filed under 37 CFR 1.116 submitted November 25, 2002.

A review of the file history shows that this application is the National Phase filing of PCT/EP99/09803 and was accepted as complete on June 18, 2001, and contained, as amended, claims 1-10. The assigned examiner issued a first Office action to applicants on October 24, 2001, setting forth a restriction/election of species requirement based on morpholine or piperidine compounds (Formulas Ia-d) and benzamidoxime compounds (Formula II) and required an election of a single species from each group. The examiner argued that neither group possessed a common core. Applicants replied on January 20, 2002 (Certificate of Mailing dated November 26, 2001), by making several amendments to the specification to correct typographical errors, amending claims 2-10 and adding claim 11 and electing Formula Ia (morpholine) and II.79, and presenting a declaration under 37 CFR 1.132. No traversal of the restriction requirement was made.

A new examiner mailed a new Office action to applicants on April 23, 2002, making the restriction requirement Final and withdrawing claims 6 and 11 as being drawn to non-elected species. The examiner also stated that there is no allowable or generic linking claim. The examiner rejected claims 1-5 and 7-10 under 35 U.S.C. 112, first paragraph, as lacking

description in the specification and under 35 U.S.C. 112, second paragraph, as indefinite, and under 35 U.S.C. 103(a) as unpatentable over Schwalge et al in view of Kasahara et al.

Applicants replied on July 2, 2002 (Certificate of Mailing dated June 26, 2002), by amending claims 1, 3, 10 and 11 and replying to each of the rejections. The examiner mailed a Final Office action to applicants on August 27, 2002, setting a three month shortened statutory period for reply. The examiner indicated that claim 6 was drawn to the elected species and included it with the other claims under examination (although the summary sheet does not so indicate), but not claim 11 as it was considered to be indefinite. The examiner also agreed that unity of invention was not lacking between claims 6 and 11 and the other claims. The examiner rejected claims 1-10 under 35 U.S.C. 112, first paragraph, for lack of enablement and also under 35 U.S.C. 103(a) as unpatentable over Schwalge et al in view of Kasahara et al.

Applicants replied on December 2, 2002 (Certificate of Mailing dated November 25, 2002), with a proposed amendment canceling claims 2-8 and 11 and amending claim 1, and presenting arguments for entry and to overcome the rejections. The examiner denied entry of the amendment based on the amendment not placing the application in better condition for appeal. On December 30, 2002 (Certificate of Mailing dated December 23, 2002), applicants filed a Notice of Appeal and this petition.

DISCUSSION

Applicants argue firstly that the lack of unity holding is improper and that all claims should be considered as a single invention. It is noted that claims 1-9 and later added claim 11 are all directed to a fungicidal mixture (composition) and all depend directly or indirectly on claim 1. Claim 10 is directed to a method of controlling fungi using the composition of claim 1. According to PCT rules applicants are correct that the claims do not lack unity and should have been considered together. The examiner considered claims 1-5 and 7-10 in the initial Office action and claims 1-10 in the Final Office action. Claims 6 and 11 should have been considered in each Office action. However, applicants state that because of the elate stages of prosecution of this application entry of the amendment after Final Office action is more desirable. This amendment cancels claims 6 and 11 which were in question.

Applicants specifically request the entry of the amendment filed December 2, 2002, arguing that the amendment reduces the issues which may be before the Board of Patent Appeals and Interferences and places the claims in better form for appeal. The examiner's reason for not entering the amendment, as set forth in the Advisory Action, centers around the rejection under 35 U.S.C. 112, first paragraph, as not being overcome. However, this is not the criteria for entering/not entering an amendment. The question to be answered is whether the amendment reduces the issues or simplifies the claims in such a manner that the preparation of an Appeal Brief and/or examiner's answer is simplified. Normally cancellation of claims is sufficient to evidence simplification of the claims/issues on appeal. Further, the narrowing of claim 1, the only independent claim, by amendment, absent some additional error being introduced which would be grounds for rejection under 35 U.S.C. 112, second paragraph, is a clear evidence of simplification/reduction of issues. Further, the examiner has not pointed out why the amendment does not simplify the issues on appeal or does not present the claims in better form for appeal. In light of such lack of supportive reasoning, the amendment filed December 2, 2002, should have been entered by the examiner.

DECISION

For the reasons specified above, applicant's petition is **GRANTED** with respect to entry of the amendment filed December 2, 2002. The lack of unity question is considered moot in view of applicants cancellation of the affected claims.

Applicants remain under obligation to file an appropriate Appeal Brief or take other appropriate action within the time period set under 37 CFR 1.192(b).

The amendment filed December 2, 2002, will be entered.

Should there be any questions with respect to this decision, please contact William R. Dixon, Jr., by mail addressed to: Director, Technology Center 1600, Washington, D.C. 20231, or by telephone at (703)308-3824 or by facsimile transmission at (703) 305-7230.

John Doll
Director, Technology Center 1600

05 AUG 2004

#6

UNITED STATES PATENT AND TRADEMARK OFFICE

COMMISSIONER FOR PATENTS
UNITED STATES PATENT AND TRADEMARK OFFICE
P.O. BOX 1450
ALEXANDRIA, VA 22313-1450
www.uspto.gov

DAVID J LEVY
CORPORATE INTELLECTUAL PROPERTY DEPT.
GLAXOSMITHKLINE
FIVE MOORE DR., PO BOX 13398
RESEARCH TRIANGLE PARK, NC 27709-3398

In re Application of FARROW et al. Application No.: 09/868,533 PCT No.: PCT/EP99/07303 Int. Filing Date: 05 October 1999 Priority Date: 23 December 1998 Attorney Docket No.: PG3600USW For: MEMBER OF THE TNF LIGAND FAMILY	DECISION ON PETITION UNDER 37 CFR 1.181

This is a decision on applicant's 18 March 2004 "Communication", requesting acceptance of declarations originally filed on 21 September 2001, in the United States Patent and Trademark Office (USPTO). The response is being treated as a petition under 37 CFR 1.181. No petition fee is required.

BACKGROUND

On 19 June 2001, applicant filed a Transmittal Letter to the United States Designated/Elected Office (DO/EO/US) Concerning a Filing Under 35 U.S.C. 371 (Form PTO 1390) along with, *inter alia*, the basic national fee.

On 23 July 2001, a Notification of Missing Requirements (Form PCT/DO/EO/905) was mailed to applicant indicating that an oath or declaration, in compliance with 37 CFR 1.497(a) & (b), a surcharge for filing the oath or declaration after the thirty month period and an English translation of the international application, was required.

On 21 September 2001, applicant filed executed declarations, in compliance with 37 CFR 1.497(a) & (b) and the $130 surcharge for filing the declaration after the 30 month period.

On 27 February 2004, a Notification of Abandonment was mailed to applicant indicating that no reply was received in response to the 23 July 2001 Notification of Missing Requirements.

On 18 March 2004, applicant filed a copy of an itemized postcard bearing a USPTO mail room date-stamped of 21 September 2001 indicating that executed declaration and surcharge were deposited with the USPTO on 21 September 2001.

DISCUSSION

A review of the application file reveals that the original declarations filed on 21 September 2001 are located in the application file. A review of the application file also reveals that an English translation of the international application is not necessary, as indicated in the Notification of Missing Requirements, as the international application was published in English.

A review of the declarations filed on 21 September 2001 indicates that the declarations identify each inventor, and state the residency, citizenship and mailing address of each inventor and thus, is in compliance with 37 CFR 1.497(a) & (b) and acceptable. A review of the finance records for 09/858,533 indicates that the $130 surcharge for filing the declaration after the thirty month period was paid on 21 September 2001.

CONCLUSION

The petition under 37 CFR 1.181 is **MOOT**. The declarations submitted on 21 September 2001 are acceptable and meet the requirements of 37 CFR 1.497(a) and (b).

The 27 February 2004 Notification of Abandonment is hereby **VACATED**.

The application will be forwarded to the United States Designated/Elected Office for further processing. The 35 U.S.C. 371(c)(1), (c)(2) and (c)(4) date is **21 September 2001.**

Cynthia M. Kratz

Cynthia M. Kratz
Attorney Advisor
PCT Legal Office

Telephone: (703) 306-5467
Facsimile: (703) 308-6459

UNITED STATES PATENT AND TRADEMARK OFFICE

Commissioner for Patents
United States Patent and Trademark Office
P.O. Box 1450
Alexandria, VA 22313-1450
www.uspto.gov

Paper No. 22

DIANNE B. ELDERKIN ESQ.
WOODCOCK WASHBURN
ONE LIBERTY PLACE-46TH FLOOR
PHILADELPHIA PA 19103

COPY MAILED

AUG 2 6 2004

OFFICE OF PETITIONS
ON PETITION

In re Application of :
Frans Eduard Janssens et al :
Application No. 09/868,535 :
Filed: July 26, 2001 :
Attorney Docket No. JANS-0004 :

This is a decision on the petition, filed August 25, 2004, under 37 CFR 1.313(c)(2) to withdraw the above-identified application from issue after payment of the issue fee.

The petition is **GRANTED**.

The above-identified application is withdrawn from issue for consideration of a submission under 37 CFR 1.114 (request for continued examination). See 37 CFR 1.313(c)(2).

Petitioner is advised that the issue fee paid on July 23, 2004 in the above-identified application cannot be refunded. If, however, the above-identified application is again allowed, petitioner may request that it be applied towards the issue fee required by the new Notice of Allowance.[1]

Telephone inquiries should be directed to the undersigned at (703) 305-8859.

After receipt of the file in the Office of Petitions, the application will be forwarded to Technology Center AU 1624 for processing of the request for continued examination under 37 CFR 1.114.

Karen Creasy

Karen Creasy
Petitions Examiner
Office of Petitions
Office of the Deputy Commissioner
for Patent Examination Policy

---

[1] The request to apply the issue fee to the new Notice may be satisfied by completing and returning the new Issue Fee Transmittal Form PTOL-85(b), which includes the following language thereon: "Commissioner for Patents is requested to apply the Issue Fee and Publication Fee (if any) or re-apply any previously paid issue fee to the application identified above." Petitioner is advised that, whether a fee is indicated as being due or not, the Issue Fee Transmittal Form **must** be completed and timely submitted to avoid abandonment. Note the language in bold text on the first page of the Notice of Allowance and Fee(s) Due (PTOL-85).

UNITED STATES PATENT AND TRADEMARK OFFICE

COMMISSIONER FOR PATENTS
UNITED STATES PATENT AND TRADEMARK OFFICE
WASHINGTON, D.C. 20231
www.uspto.gov

DEC 12 2001

Eric Snustad
Fredrikson & Byron
1100 International Centre
900 Second Avenue South
Minneapolis, MN 55402

In re Application of	:	
KRISKO et al.	:	
Application No.: 09/868,542	:	DECISION ON PETITION
PCT No.: PCT/US99/02208	:	UNDER 37 CFR 1.137(b)
Int. Filing Date: 02 February 1999	:	
Priority Date: 21 December 1998	:	
Attorney Docket No.: 44046.203.96	:	
For: SOIL-RESISTANT COATING FOR GLASS SURFACES	:	

The petition to revive under 37 CFR 1.137(b) filed17 September 2001 in the above-captioned application is hereby **GRANTED** as follows:

Applicants' statement that the "the entire delay in filing the required reply from the due date for the reply until the filing of a grantable petition under 37 CFR 1.137(b) was unintentional" meets the requirements of 37 CFR 1.137(b)(3).

A review of the application file reveals that applicants have submitted the basic national fee of $860 and the requirements of 37 CFR 1.137(b) have been satisfied. Therefore, the request to revive the application abandoned under 35 U.S.C. 371(d) is granted as to the National stage in the United States of America.

This application is being forwarded to the United States Designated/Elected Office (US/DO/EO) for continued processing including the issuance of a Notification of Missing Requirements (Form PCT/DO/EO/905) indicating that an oath or declaration is required.

Anthony Smith

Anthony Smith
Attorney-Advisor
PCT Legal Office
Telephone: (703) 308-6314
Facsimile: (703) 308-6459

UNITED STATES PATENT AND TRADEMARK OFFICE

COMMISSIONER FOR PATENTS
UNITED STATES PATENT AND TRADEMARK OFFICE
P.O. BOX 1450
ALEXANDRIA, VA 22313-1450
www.uspto.gov

AUG 26 2004

Mailed:

WK
Paper Number __

In re application of
Krisko, et al.
Serial No. 09/868,542
Filed: May 14, 2002
For: SOIL-RESISTANT COATING FOR GLASS SURFACES

DECISION ON PETITION

This is a decision on PETITION TO EXPUNGE UNDER 37 C.F.R. 1.182, filed July 14, 2004, which has been accepted as a timely petition under 37 C.F.R. 1.59(b) and MPEP 724.02 and is before the Group Director of Technology Center for consideration.

DECISION

Petitioner requests that the Information Disclosure Statement (IDS) filed July 14, 2004 be expunged and that the documents be appropriately disposed of in accordance with 37 CFR 1.59. Each of the criteria for granting the request has been satisfied, see the MPEP 724.05.

The petition is **GRANTED.**

Section 1.59 has been amended to eliminate references to returning documents that have been expunged to recognize that, with electronic Official files, there will be nothing to return when a paper is expunged.

The Office is capturing electronic images of all documents that form the Official file. Where the image is generated from a physical source document, the originating document may be disposed of once the electronic image accuracy is verified. The paper source document will eventually be destroyed under a United States National Archives and Records Administration (NARA) approved schedule. Therefore, if a document is to be expunged from the record, the only operation that will be required will be removal of the image from the Official file.

Paragraph (a)(1) of §1.59 has been amended by deleting the phrase ''and returned '' from the first sentence, and deleting the second sentence. Paragraph (b) of §1.59 has been amended by deleting the phrase ''and return '' from each of the first and second sentences. The Office will continue to provide notice in the Official file that a paper has been expunged and the Office will send a decision to the applicant notifying the applicant that the paper has been expunged.

09/868,542

The images of the documents and IDS have been removed from the Official file.

Jacqueline M. Stone, Director
Technology Center 1700
Chemical and Materials Engineering

John F. Dolan
Fredrikson & Byron, P.A.
200 South Sixth Street, Suite 4000
Minneapolis, MN 55402-1425

OCT 1 8 2001

UNITED STATES PATENT AND TRADEMARK OFFICE

COMMISSIONER FOR PATENTS
UNITED STATES PATENT AND TRADEMARK OFFICE
WASHINGTON, D.C. 20231
www.uspto.gov

#4

ERIC J. SNUSTAD
FREDERIKSON & BYRON
1100 INTERNATIONAL CENTRE
900 SECOND AVENUE SOUTH
MINNEAPOLIS , MN 55402

In re Application of KRISKO et al. Serial No.: 09/868,543 PCT No.: PCT/US99/17876 Int. Filing Date: 06 August 1999 Priority Date: 21 December 1998 Attorney's Docket No.: 440462031131 For: LOW-EMISSIVITY, SOIL-RESISTANT COATING FOR GLASS SURFACES	DECISION ON PETITION UNDER 37 CFR 1.137(b)

This is a decision on applicant's 'Petition for Revival of an International Application for Patent Designating the U.S. Abandoned Unintentionally Under 37 CFR 1.137 (b)" filed in the United States Patent and Trademark Office on 15 August 2001, in effect, requesting that the Notification of Abandonment mailed 06 August 2001 be vacated.

BACKGROUND

On 06 August 1999, applicant filed international application No. PCT/US99/17876 which claimed priority of an earlier U.S. application filed 21 December 1998. A copy of the international application had been communicated to the United States Patent and Trademark Office from the International Bureau on 29 June 2000.

On 21 July 2000, a Demand for international preliminary examination, in which the United States was elected, was filed prior to the expiration of nineteen months from the priority date. Accordingly, the thirty-month period for paying the basic national fee in the United States expired at midnight on 21 June 2001.

On 19 June 2001, applicant filed a transmittal letter requesting entry into the national stage in the United States of America under 35 U.S.C. §371 without the basic national fee or authorization to charge the fee to a deposit account.

On 12 July 2001, applicant submitted fees in the amount of $1070.00 to be used in accord with the Fee Calculation Sheet filed on 19 June 2001 in this application.

On 06 August 2001, the United States Designated/Elected Office (DO/EO/US) mailed a Notification of Abandonment (Form PCT/DO/EO/909) indicating that applicant failed to provide the full U.S. basic national fee by the thirty month deadline and the application was abandoned.

On 15 August 2001, applicant filed a petition to revive with the petition fee of $1240, in effect, requesting the withdrawal of the holding of abandonment.

DISCUSSION

Applicant's statement that "the entire delay in filing the required reply from the due date for the required reply until the filing of a grantable petition under 37 CFR 1.137(b) was unintentional" meets the requirements of 37 CFR 1.137(b)(3).

A review of the application file reveals that the basic national fee of $860 has been paid and that the required petition fee of $1240 has also been paid. The requirements of 37 CFR 1.137(b) have been satisfied. Therefore, the request to revive the application abandoned under 35 U.S.C. 371(d) is granted as to the National stage in the United States of America.

CONCLUSION

The petition to revive under 37 CFR 1.137(b) is **GRANTED**.

This application is being forwarded to the National Stage Processing Division of the Office of PCT Operations for continued processing including issuance of the Notification of Missing Requirements (Form PCT/DO/EO/905) indicating that the oath or declaration and the surcharge for filing the oath or declaration after the thirty month period is required.

Cynthia M. Kratz

Cynthia M. Kratz
Attorney Advisor
PCT Legal Office

Telephone: (703) 306-5467

NOV 13 2001

UNITED STATES PATENT AND TRADEMARK OFFICE

COMMISSIONER FOR PATENTS
UNITED STATES PATENT AND TRADEMARK OFFICE
WASHINGTON, D.C. 20231
www.uspto.gov

MILLEN, WHITE, ZELANO & BRANIGAN, P.C.
2200 CLARENDON BLVD.
SUITE 1400
ARLINGTON , VA 22201

In re Application of CHRISTOPHERS et al. Application No.: 09/868,569 PCT No.: PCT/EP00/00776 Int. Filing Date: 01 February 2000 Priority Date: 01 February 1999 Attorney Docket No.: SCH 1813 A For: HUMAN ANTIBIOTIC PROTEINS	DECISION ON PETITION UNDER 37 CFR 1.137(b)

This decision is in response to applicant's "PETITION FOR REVIVAL OF AN APPLICATION FOR PATENT ABANDONED UNINTENTIONALLY UNDER 37 CFR 1.137(b)" filed 20 June 2001.

BACKGROUND

On 01 February 2000, applicants filed international application PCT/EP00/00776, which claimed a priority date of 01 February 1999. A copy of the international application was communicated to the United States Patent and Trademark Office (USPTO) from the International Bureau on 10 August 1000. The twenty-month period for paying the basic national fee in the United States expired at midnight on 01 October 2000.

On 20 June 2001, applicants filed, *inter alia*, a submission for entry into the national stage in the United States which was accompanied by, *inter alia*, the U.S. Basic National Fee and the instant "PETITION FOR REVIVAL OF AN APPLICATION FOR PATENT ABANDONED UNINTENTIONALLY UNDER 37 CFR 1.137(b)".

DISCUSSION

A petition to revive the present application under 37 CFR 1.137(b) must include:

(1) The required reply;
(2) The petition fee;
(3) A statement that the entire delay in filing the required reply from the due date for the reply until the filing of a grantable petition was unintentional.

As to item (1), applicants submitted the basic national fee on 20 June 2001.

As to item (2), applicants submitted the petition fee of $1,240.00 on 20 June 2001.

With regard to item (3), petitioner has provided the required statement.

A review of the application file reveals that, with the filing of the present petition and accompanying papers, a proper response has been submitted and all of the requirements of 37 CFR 1.137(b) for revival have been satisfied and revival is therefore appropriate.

CONCLUSION

The petition under 37 CFR 1.137(b) is **GRANTED** for the reasons set forth above.

Please direct any further correspondence with respect to this matter to the Commissioner of Patents and Trademarks, Box PCT, Washington, D.C. 20231, and address the contents of the letter to the attention of the Office of PCT Legal Administration.

This application is being forwarded to the National Stage Processing Branch of the Office of PCT Operations to continue national stage processing of the application including preparing and mailing a NOTIFICATION OF MISSING REQUIREMENTS (Form PCT/DO/EO/905) requiring: a translation of the application into English; the processing fee under 37 CFR 1.492(f) for providing the translation later than twenty months from the priority date; an oath or declaration in compliance with 37 CFR 1.497(a)-(b); and the surcharge under 37 CFR 1.492(e) for providing the oath or declaration later than twenty months from the priority date.

Daniel Stemmer
Legal Examiner
PCT Legal Affairs
Office of Patent Cooperation Treaty
Legal Administration
Telephone: (703) 308-2066
Facsimile: (703) 308-6459

UNITED STATES PATENT AND TRADEMARK OFFICE

Commissioner for Patents
United States Patent and Trademark Office
P.O. Box 1450
Alexandria, VA 22313-1450
www.uspto.gov

MILLEN WHITE ZELANO & BRANIGAN, P.C.
2200 CLARENDON BLVD., SUITE 1400
ARLINGTON, VA 22201

COPY MAILED
NOV 22 2004
OFFICE OF PETITIONS

In re Application of
Enno Christophers et al
Application No. 09/868,569
Filed: January 22, 2002
Attorney Docket No. 33808F150

ON PETITION

This is a decision on the petition under 37 CFR 1.137(b), filed October 25, 2004, to revive the above-identified application.

The petition is **GRANTED**.

The above-identified application became abandoned for failure to reply in a timely manner to the non-final Office action mailed April 9, 2004, which set a shortened statutory period for reply of one (1) month. No extensions of time under the provisions of 37 CFR 1.136(a) were obtained. Accordingly, the above-identified application became abandoned on May 10, 2004.

Telephone inquiries concerning this decision should be directed to Wan Laymon at (571) 272-3220.

This matter is being referred to Technology Center AU 1645.

Wan Laymon
Petitions Examiner
Office of Petitions
Office of the Deputy Commissioner
for Patent Examination Policy

23 JUL 2003

UNITED STATES PATENT AND TRADEMARK OFFICE

COMMISSIONER FOR PATENTS
UNITED STATES PATENT AND TRADEMARK OFFICE
P.O. BOX 1450
ALEXANDRIA, VA 22313-1450
www.uspto.gov

David H. Tannenbaum
FULBRIGHT & JAWORSKI
2200 Ross Avenue, Suite 2800
Dallas, Texas 75201-2784

In re Application of:	:	
MOSSE, et al.	:	DECISION ON PETITION TO
U.S. Application No.: 09/868,584	:	REVIVE ABANDONED
PCT No.: PCT/GB01/01488	:	APPLICATION UNDER 37
International Filing Date: 02 April 2001	:	CFR 1.137(b)
Priority Date: 03 April 2000	:	
Attorney's Docket No.: 51407-P012US	:	
For: A PIPE JOINT AND GASKET THEREFOR	:	

The petition to revive under 37 CFR 1.137(b) filed 11 March 2003 in the above-captioned application is hereby **GRANTED** as follows:

Applicants' statement that "the entire delay in filing the required reply from the due date for the required reply until the filing of a grantable petition under 37 CFR 1.137(b) was unintentional" meets the requirements of 37 CFR 1.137(b)(3).

Applicants have now submitted the small entity basic national fee and the requirements of 37 CFR 1.137(b) have been satisfied. Therefore, the request to revive the application is granted as to the national stage in the United States of America.

A review of the application file reveals that applicants filed a declaration in compliance with 37 CFR 1.497 on 05 March 2002.

This application is being returned to the National Stage Processing Division of the Office of PCT Operations for further processing in accordance with this decision. The 35 U.S.C. 371 date is **11 March 2003**.

Richard M. Ross
PCT Petitions Attorney
PCT Legal Office
Telephone: (703) 308-6155
Facsimile: (703) 308-6459

UNITED STATES PATENT AND TRADEMARK OFFICE

COMMISSIONER FOR PATENTS
UNITED STATES PATENT AND TRADEMARK OFFICE
P.O. BOX 1450
ALEXANDRIA, VA 22313-1450
www.uspto.gov

Paper No. 111703

NOV 19 2003

Martin A. Farber
866 United Nations Plaza
Suite 473
New York, New York 10017

In re Application of	:	
BLUME et al.	:	DECISION ON PETITION
Application No. 09/868,606	:	
Filed: September 17, 2001	:	
Attorney Reference No. 4117-US	:	

This is a decision on the petition filed June 19, 2003, requesting that the holding of abandonment in the above-identified application be withdrawn.

The petition to withdraw the holding of abandonment is **GRANTED.**

A non-final Office action was mailed on December 5, 2002, setting forth a three-month period of response. The application became abandoned on March 6, 2002 by operation of law.

Petitioner states that the non-final Office action was never received by applicant's representative and attests to the fact that a search of the file jacket and docket records indicates that the non-final Office action was not received. The petition is accompanied by a copy of the docket record where the non-received notice would have been entered.

Pursuant to M.P.E.P. §711.03(c), it is the petitioner's burden to demonstrate that the non-final Office action was not in fact received at the correspondence address of record at the time it was mailed. The showing required to establish the failure to receive an Office action must include a statement from the practitioner stating that the Office action was not received by the practitioner and attesting to the fact that a search of the file jacket and docket records indicates that the Office action was not received. A copy of the docket record where the non-received Office action would have been received had it been received and docketed must be attached to and referenced in the practitioner's statement. See "Withdrawing the Holding of Abandonment When Office Actions Are Not Received" 1156 Official Gazette 53 (November 16, 1993) and M.P.E.P. §711.03(c),

Applicant has provided the required statement attesting to the fact that a search of the file jacket and docket records indicates that the Office action was not received. Further, applicant has provided a copy of the docket record where the non-received Office action would have been received had it been received and docketed.

Since applicant has made the requisite showing required under M.P.E.P §711.03(c), the holding of abandonment is withdrawn.

The application file is being forwarded to the Technical Support staff for re-mailing the non-final Office action. The shortened period for response set therein will be reset to expire three months from the date the Office action is remailed.

Questions regarding this decision should be directed to Jose' G. Dees at (703) 308-4628.

Richard K. Seidel, Director
Technology Center 2800
Semiconductor, Electrical and Optical
Systems and Components

UNITED STATES PATENT AND TRADEMARK OFFICE

COMMISSIONER FOR PATENTS
UNITED STATES PATENT AND TRADEMARK OFFICE
P.O. BOX 1450
ALEXANDRIA, VA 22313-1450
www.uspto.gov

ARMSTRONG, KRATZ, QUINTOS, HANSON & BROOKS, LLP
1725 K STREET, NW
SUITE 1000
WASHINGTON DC 20006

COPY MAILED

JAN 15 2004

OFFICE OF PETITIONS

In re Application of
Hisaji Matsui, et al.
Application No. 09/868,620
Filed: June 25, 2001
Attorney Docket No. 010756

ON PETITION

This is a decision on the petition under 37 CFR 1.313(c)(2), filed January 7, 2004, to withdraw the above-identified application from issue after payment of the issue fee.

The petition is **GRANTED**.

The above-identified application is withdrawn from issue for consideration of a submission under 37 CFR 1.114 (request for continued examination). See 37 CFR 1.313(c)(2).

Petitioner is advised that the issue fee paid on November 4, 2003, in the above-identified application cannot be refunded. If, however, the above-identified application is again allowed, petitioner may request that it be applied towards the issue fee required by the new Notice of Allowance. [1]

Telephone inquiries relating to this decision should be directed to the undersigned at (703) 305-9220.

After the application is received in the Office of Petitions, the file will be forwarded to Technology Center AU 1754 for further processing of the request for continued examination under 37 CFR 1.114.

Sherry D. Brinkley
Petitions Examiner
Office of Petitions
Office of the Deputy Commissioner
for Patent Examination Policy

[1]The request to apply the issue fee to the new Notice may be satisfied by completing and returning the new Issue Fee Transmittal Form PTOL-85(b), which includes the following language thereon: "Commissioner for Patents is requested to apply the Issue Fee and Publication Fee (if any) or re-apply any previously paid issue fee to the application identified above." Petitioner is advised that, whether a fee is indicated as being due or not, the Issue Fee Transmittal Form **must** be completed and timely submitted to avoid abandonment. Note the language in bold text on the first page of the Notice of Allowance and Fee(s) Due (PTOL-85).

26 FEB 2004

#5

UNITED STATES PATENT AND TRADEMARK OFFICE

COMMISSIONER FOR PATENTS
UNITED STATES PATENT AND TRADEMARK OFFICE
P.O. BOX 1450
ALEXANDRIA, VA 22313-1450
www.uspto.gov

DENNISON, SCHULTZ, DOUGHERTY & MACDONALD
SUITE 105
1727 KING STREET
ALEXANDRIA, VA 22314-2700

In re Application of JUAN ELIZALDE BERTAND Application No.: 09/868,653 PCT No.: PCT/ES99/00406 Int. Filing Date: 28 December 1999 Priority Date: 30 December 1998 Attorney's Docket No.: 01118 For: A METHOD OF INTERCONNECTING THE FRONT AND REAR WHEELS IN TWO-WHEELED VEHICLES, AND A VEHICLE PRODUCED IN ACCORDANCE WITH THE METHOD	DECISION ON PETITION UNDER 37 CFR 1.181

This is in response to applicant's "Request to Withdraw Holding of Abandonment" based on a failure to receive an office action, treated as a petition under 37 CFR 1.181 and filed in the United States Patent and Trademark Office (USPTO) on 01 December 2003 alleging that applicant did not receive the Notification of Missing Requirements mailed on 03 August 2001.

BACKGROUND

A review of the application file reveals that the NOTIFICATION OF MISSING REQUIREMENTS was mailed by the USPTO on 03 August 2001. The notification indicated that an oath or declaration and surcharge had not been received. Applicant was given two months to respond to the Notification or until 03 October 2001, with extensions of time (up to 5 months) available under 37 CFR 1.135(a). No response to the Notification of Missing Requirements was received, and thus, the application was held to be **ABANDONED** as of midnight on 03 March 2002.

On 14 November 2003, a Notification of Abandonment (Form PCT/DO/EO/909) was mailed to applicant.

DISCUSSION

In order to establish that papers were not received, a petition under 37 CFR 1.181 with a proper showing is required. As set forth in the Official Gazette at 1156 OG 53, the petition must include the following: (1) a statement by the practitioner that the Office action was not received by the practitioner; (2) a statement attesting that a search of the file jacket and docket records indicates that the Office action was not received; and (3) a copy of the docket record where the non-received Office action would have been entered had it been received (the docket records must also be referenced in practitioner's statement). No petition fee is required.

Counsel for applicant states that he did not receive the Notification of Missing Requirements mailed on 03 August 2001 and that a search of the file jacket and docket records

indicates that the Office action was not received. Counsel also submitted a "computer printout of the docket of the law firm of the undersigned attorney showing actions due on October 3, 2001, and no record of the referenced action is found." Counsel also supplied "a copy of the face of the file of the above application, where such an action would have been recorded."

Attorney for applicant proffers that the mailing address used by the USPTO on the Notification of Missing Requirements and Notification of Abandonment (612 Crystal Davis Highway, Arlington, VA 22201-3417) was in error and that this is the cause of his nonreceipt of the Notification of Missing Requirements. Counsel states that the correct address (612 Crystal Square 4, 1745 Jefferson Davis Highway, Arlington, VA 22202-3417) is the address listed on the transmittal letter for entry in the U.S. national stage filed on 02 July 2001.

A review of the application file and the USPTO records indicates that counsel listed the "612 Crystal Square 4, 1745 Jefferson Davis Highway, Arlington, VA 22202-3417" address on the transmittal letter for this application. However, the USPTO PALM record incorrectly lists "612 Crystal Davis Highway" as the correspondence address.

The Notification of Missing Requirements mailed on 03 August 2001 and Notification of Abandonment mailed on 14 November 2003 will be vacated.

Applicant filed a "Change of Address" on 01 December 2003. The new address will be noted in the USPTO records.

CONCLUSION

For the reasons presented above, the Petition to withdraw the holding of abandonment under 37 CFR 1.181 is **GRANTED**.

The 03 August 2001 Notification of Missing Requirements and the 14 November 2003 Notification of Abandonment (Form PCT/DO/EO/909) are hereby **VACATED.**

Applicants' correspondence address will be corrected in the USPTO records to reflect the address change filed on 01 December 2003.

The application will be forwarded to the United States Designated/Elected Office for further processing. The declaration, in compliance with 37 CFR 1.497(a) and (b), submitted on 01 December 2003, and the $65 surcharge for filing the oath or declaration after the thirty month period have been filed. The 35 U.S.C. 371(c)(1), (c)(2) and (c)(4) date is **01 December 2003.**

Cynthia M. Kratz

/Cynthia M. Kratz
Attorney Advisor
Office of PCT Legal Administration

Telephone: (703) 306-5467
Facsimile: (703) 308-6459

UNITED STATES PATENT AND TRADEMARK OFFICE

Commissioner for Patents
United States Patent and Trademark Office
P.O. Box 1450
Alexandria, VA 22313-1450
www.uspto.gov

Banner & Witcoff, Ltd.
Attorneys for Client No. 005222
10 S. Wacker Drive, 30th Floor
Chicago, IL 60606

COPY MAILED
JUL 07 2006
OFFICE OF PETITIONS

In re Application of :
Lannert, et al. :
Application No. 09/868,667 : ON PETITION
Filed: September 4, 2001 :
Attorney Docket No.: 05222.00179 :

This is a decision on the petition under 37 CFR 1.137(b), filed February 21, 2006, to revive the above-identified application. The petition was recently forwarded to the Office of Petitions for a decision on the merits. The Office sincerely apologizes for any inconvenience.

On September 20, 2005, the Office mailed a Notice of Allowance and Fee(s) Due, which set a three-month statutory period for reply. In the absence of a timely filed response, the application became abandoned on December 21, 2005. On February 2, 2006, the Office mailed a Notice of Abandonment.

Petitioner has met the requirements of 37 CFR 1.137(b) to revive this application. Petitioner submitted a reply in the form of payment of the issue fee, made the appropriate statement of unintentional delay, and paid the petition fee. Accordingly, the petition is granted. The Office notes that it mistakenly charged petitioner's Deposit Account twice for the issue fee and the petition fee. The total amount of $2,900.00 will be refunded to Deposit Account No. 19-0733.

This matter is being referred to the Office of Patent Publication.

Telephone inquiries related to this decision may be directed to the undersigned at (571) 272-3211. All other questions regarding the status of the application or the issuance of a patent should be directed to the Office of Patent Publication Customer Service at (571) 272-4200.

Christina Tartera Donnell

Christina Tartera Donnell
Senior Petitions Attorney
Office of Petitions

UNITED STATES PATENT AND TRADEMARK OFFICE

Commissioner for Patents
United States Patent and Trademark Office
P.O. Box 1450
Alexandria, VA 22313-1450
www.uspto.gov

BROWDY AND NEIMARK, P.L.L.C.
624 NINTH STREET, NW
SUITE 300
WASHINGTON, DC 20001-5303

COPY MAILED

JUN 28 2005

OFFICE OF PETITIONS

In re Application of
Alf Andersson
Application No. 09/868,729
Filed: June 21, 2001
Attorney Docket No. ANDERSSON13

ON PETITION

This is a decision on the petition under 37 CFR 1.137(b) to revive the above-identified application, filed March 9, 2005.

The application became abandoned for failure to pay the issue fee on or before May 27, 2003. A Notice of Abandonment was mailed on July 1, 2003. The present petition is filed in response to a decision, mailed March 3, 2005, dismissing a petition filed July 24, 2003.

The petition is found to comply with the requirements of 37 CFR 1.137(b). Accordingly, the petition is GRANTED.

The application is being referred to Publishing Division.

Telephone inquires related to this decision should be directed to the undersigned at (571) 272-3204. Telephone inquiries related to processing at Publishing Division should be directed to (703) 305-8283.

Sherry D. Brinkley
Petitions Examiner
Office of Petitions
Office of the Deputy Commissioner
for Patent Examination Policy

UNITED STATES PATENT AND TRADEMARK OFFICE

Commissioner for Patents
United States Patent and Trademark Office
Washington, D.C. 20231
Alfwww.uspto.gov

BROWDY AND NEIMARK, P.L.L.C.
624 NINTH STREET, NW
SUITE 300
WASHINGTON, DC 20001-5303

COPY MAILED

MAR 0 3 2005

Director's Office
Office of Patent Publication

In re Application of :
Alf Andersson :
Application No. 09/868,729 : **DECISION ON PETITION**
Filed: June 21, 2001 :
Attorney's Docket No. ANDERSSON=13 :

This is a decision on the Petition To Vacate Holding Of Abandonment Under 1.181(a)(1), received in the United States Patent and Trademark Office (USPTO) via facsimile transmission on February 17, 2005. Petitioner has submitted a copy of the return postcard, which acknowledges of the same petition on July 24, 2003, as evidenced by the Office Date stamp receipt thereon.

The petition is **DISMISSED.**

The application was abandoned for the applicant's failure to timely pay the required issue fee within the statutory period of three months from the mailing date of the Notice of Allowance. The issue fee was received on June 4, 2003. The due date was May 27, 2003.

Petitioner acknowledges receipt of the Notice of Allowance and Issue Fee(s) Due, mailed February 2, 2003, on March 3, 2003. However, Petitioner notes that the attached Notice of Allowability and Interview Summary Record was for an entirely different and unrelated application (09/777,140). Petitioner states that their Docketing Manager contacted the group to report the error and was informed that an entirely new Notice of Allowance and Issue Fee Due Form with correct attachments would be mailed and the deadline for response re-set.

Petitioner acknowledges receipt of the new Notice of Allowance (Notice), but noted that the Notice contained errors in that the deadline for payment of the issue fee was incorrect. Petitioner further notes that the mailing date of the Notice was March 4, 2003, meaning that the due date was June 4, 2003. Petitioner argues that the Issue Fee and formal drawings were timely filed on June 4, 2003 based on the second Notice of Allowance giving three months to pay the issue fee.

Investigation of the application file reveals that on March 3, 2003 the Office mailed the new Notice of Allowance and Fee(s) Due and the Notice of Allowability. However, it appears that since no errors existed in the first Notice of Allowance, the due date to pay the issue fee was not re-started. Therefore, the due date of May 27, 2003, indicated on the new Notice was correct.

Petitioner appears to be unaware of Office practice with respect to providing a new issue fee due date. However, petitioner is expected to be aware of, and to properly apply, the statues, rules, practices, and procedures before the Office. As noted in 1056 O.G. 35 (June 12 1995) reproduced below:

ERRORS IN THE NOTICE OF ALLOWANCE

> The purpose of the notice is to clarify existing Office practice with respect to providing a new issue fee due date. Sometimes errors appear in the Notice of Allowance, such as an incorrect number of claims, the misspelling of an inventor's name, an incorrect inventorship or an incorrect title. A duplicate Notice Of Allowance correcting the errors my be requested from the Group that mailed the Notice. However, a new issue fee due date will not be provided if the information on the original Notice of Allowance is sufficient to allow a reasonable practitioner to timely file a proper issue fee in the correct application. Specifically, the mere filing of a request for corrected or duplicate Notice of Allowance will not act to stay the period for paying the issue fee.

Since the error was the mailing of the wrong Notice of Allowability and Interview Summary Record by the USPTO and no error existed on the new Notice of Allowance the holding of abandonment will not be withdrawn as this time.

The USPTO apologizes if they were improperly informed that the due date for payment of the issue fee would be re-set.

Petitioner may seek relief by filing a Petition for Revival of Abandoned Application under CFR § 1.137 (a) or (b). Forms are available at USPTO website http://www.uspto.gov

■ Under 37 CFR 1.137(a), a petition for the revival of an ***unavoidably*** abandoned application must include the following:

> (1) The reply required to the outstanding Office action or notice, unless previously filed;
> (2) The petition fee set forth in § 1.17(l);
> (3) A showing to the satisfaction of the Director that the entire delay in filing the required reply from the due date for the reply until the filing of a grantable petition pursuant to this paragraph was unavoidable: and
> (4) Any terminal disclaimer (and fee as set forth in § 1.20(d) required pursuant to paragraph (d) of this section.

or

■ Under 37 CFR 1.137(b), a petition for the revival of an ***unintentionally*** abandoned application must be:

> (1) The reply required to the outstanding Office action or notice, unless previously filed;
> (2) The petition fee as set forth in § 1.17(m);
> (3) A statement that the entire delay in filing the required reply from the due date for the reply until the filing of a grantable petition pursuant to this paragraph was unintentional. The Director may require additional information where there is a question whether the delay was unintentional;
> (4) Any terminal disclaimer (and fee as set forth in § 1.20(d) required pursuant to paragraph (d) of this section.

Further correspondence with respect to the petition for revival under 37 CFR 1.137 should be directed to the Office of Petitions at 703-305-9282 or addressed as follows:

By mail: Mail Stop Petitions
Commissioner for Patents
Office of Petitions
P. O. Box 1450
Alexandria, VA 22313-1450

Telephone inquires relating to this decision may be directed to the undersigned in the Office of Patent Publications at 703-305-9250 ext. 137.

Thomas E. Hawkins

Thomas E. Hawkins
Paralegal Specialist
Office of the Director
Office of Patent Publication

UNITED STATES PATENT AND TRADEMARK OFFICE

Commissioner for Patents
United States Patent and Trademark Office
P.O. Box 1450
Alexandria, VA 22313-1450
www.uspto.gov

BARNES & THORNBURG LLP
PO BOX 2786
CHICAGO IL 60690-2786

COPY MAILED

AUG 2 4 2006

OFFICE OF PETITIONS

In re Application of	:	
Cittadini, et al.	:	
Application No. 09/868,740	:	DECISION ON PETITION
Filed: June 19, 2001	:	
Attorney Docket No. 6502-1515	:	

This is a decision on the petition to revive the above-identified application under 37 CFR 1.137(b), filed January 20, 2006.

The petition is **GRANTED**.

The above-identified application became abandoned for failure to timely pay the issue fee and file corrected drawings in response to the Notice of Allowance and Notice of Allowability mailed March 31, 2005. These Notices set a statutory period for reply of three months. No extensions of time under 37 CFR 1.136(a) were available. No issue fee or drawings having been received, the above-identified application became abandoned on July 1, 2005. A Notice of Abandonment was mailed on October 25, 2005.

With the instant petition, petitioner paid the petition fee, submitted the required reply in the form of the issue fee and drawings, and made the proper statement of unintentional delay.

The application file is being forwarded to the Office of Patent Publications for processing into a patent.

Telephone inquiries concerning this decision may be directed to the undersigned at (571)272-3207.

Cliff Congo
Petitions Attorney
Office of Petitions

UNITED STATES PATENT AND TRADEMARK OFFICE

COMMISSIONER FOR PATENTS
UNITED STATES PATENT AND TRADEMARK OFFICE
WASHINGTON, D.C. 20231
www.uspto.gov
DIW 04-03

Paper No. 13

DARIN J GIBBY
TOWNSEND AND TOWNSEND AND CREW
TWO EMBARCADERO CENTER 8TH FLOOR
SAN FRANCISCO CA 94111

COPY MAILED

APR 1 6 2003

OFFICE OF PETITIONS

In re Patent No. 6,394,144	:
Issued: 28 May, 2002	: DECISION DISMISSING
Application No. 09/868,145	: PETITION
Filed: 20 September, 2001	:
Attorney Docket No. 020399-000100US	:

This is a decision on the petition filed under 37 CFR 1.182 on 4 December, 2002, requesting issuance of a Certificate of Correction to add a claim of priority to two foreign applications to the front of the Letters Patent.

The petition is **dismissed**.

Any request for reconsideration of this decision should be filed within TWO (2) MONTHS of this decision. **This time period is not extendable.**[1]

37 CFR 1.55(a)(2) states, in pertinent part:

> The claim for priority and the certified copy of the foreign application specified in 35 U.S.C. § 119(b) or PCT Rule 17 must, in any event, be filed before the patent is granted.

A review of the file fails to disclose an indication that either the claim for priority or the certified copy of the foreign applications were filed prior to the date the patent issued. If the claim for priority and the certified copies have never been submitted, a claim to foreign priority benefits cannot be perfected by way of a certificate of correction since the requirements of 35 U.S.C. § 119(a)-(d) were not satisfied in the patent application, or its parent, prior to issuance, and the requirements of 37 CFR 1.55(a) are not met. As such, the claim to foreign priority benefits can be perfected only by way of a

[1] See 37 CFR 1.181(f).

reissue application.[2]

For the above-stated reasons, the issuance of a Certificate of Correction is not appropriate. The petition is therefore dismissed.

Further correspondence with respect to this matter should be addressed as follows:

By mail: Commissioner of Patents and Trademarks
Box DAC
Washington, D.C. 20231

OR (after 1 May, 2003)[3]

Mail Stop Petition
Commissioner for Patents
P.O. Box 1450
Alexandria, VA 22313-1450

By FAX: (703)308-6916
Attn: Office of Petitions

By hand: Crystal Plaza Four, Suite CP4-3C23
2201 South Clark Place
Arlington, VA 22202

The application file is being forwarded to Files Repository.

Telephone inquiries concerning this matter may be directed to the undersigned at (703)308-6918.

DWood

Douglas I. Wood
Senior Petitions Attorney
Office of Petitions

---

[2] See Brenner v. State of Israel, 158 USPQ 584.

[3] Effective 1 May, 2003, the U.S. Patent and Trademark Office is changing its address for some mail in preparation for its move to new office space in Alexandria, Virginia beginning at the end of 2003. See 68 Fed. Reg. 14332 (March 25, 2003).

UNITED STATES PATENT AND TRADEMARK OFFICE

Commissioner for Patents
United States Patent and Trademark Office
P.O. Box 1450
Alexandria, VA 22313-1450
www.uspto.gov

Morrison & Foerster LLP
1650 Tysons Boulevard
Suite 400
Mclean, VA 22102

COPY MAILED

NOV 2 0 2007

OFFICE OF PETITIONS

In re Application of	:	
Andreas Jurisch	:	
Application No. 09/868,773	:	DECISION ON PETITION
Filed: June 21, 2001	:	TO WITHDRAW
Attorney Docket No. 1998P04230	:	FROM RECORD
	:	

This is a decision on the Request to Withdraw as attorney or agent of record under 37 C.F.R. § 1.36(b), filed June 28, 2007.

The request is **NOT APPROVED** as moot.

A review of the file record indicates that the power of attorney to Morrison & Foerster LLP has been revoked by the assignee of the patent application on August 16, 2007. Accordingly, the request to withdraw under 37 C.F.R. § 1.36(b) is moot.

All future communications from the Office will continue to be directed to the below-listed address until otherwise notified by applicant.

Telephone inquires concerning this decision should be directed to Terri Williams at 571-272-2991.

T. Williams

Terri Williams
Petitions Examiner
Office of Petitions

cc: **Lerner Greenberg Stemer LLP**
P O Box 2480
Hollywood, FL 33022-2480

UNITED STATES PATENT AND TRADEMARK OFFICE

COMMISSIONER FOR PATENTS
UNITED STATES PATENT AND TRADEMARK OFFICE
P.O. BOX 1450
ALEXANDRIA, VA 22313-1450
www.uspto.gov

MAILED
FROM DIRECTORS OFFICE
JUL 26 2004
TECHNOLOGY CENTER 3600

Edward J. Radlo
Fenwick & West
Two Palo Alto Square
Palo Alto, CA 94306

In re application of:
Roderic C. E. Butler et al.
Application No. 09/868,821
Filed: June 20, 2001
For: COMPUTERIZED PROVISION OF PROFESSIONAL AND ADMINISTRATIVE SERVICES

: **DECISION ON REQUEST**
: **FOR WITHDRAWAL OF**
: **ATTORNEY**

This is a decision on the request filed on June 7, 2004, under 37 CFR 1.36 and MPEP 402.06, requesting permission to withdraw as the attorney of record in the above-identified application.

The request is **NOT APPROVED**.

Under 37 CFR 1.36 an attorney may withdraw only upon application to and approval by the Commissioner. It should be noted that a withdrawal is effective when approved, not when filed. Besides giving due notice to his or her client and delivering to the client all papers and property to which the client is entitled as specified under 37 CFR 10.40, approval of such a request requires that the following conditions be met:

A) Each attorney of record must sign the notice of withdrawal, or the notice must contain a clear indication of one attorney signing on behalf of another, because the Office does not recognize law firms;

B) A proper reason for the withdrawal as enumerated in 37 CFR 10.40(b) or subsection (1)-(6) of 37 CFR 10.40(c) must be provided; and

C) If withdrawal is requested in accordance with 37 CFR 10.40(c) above, there must be at least 30 days between approval of the withdrawal and the later of the expiration date of a time period for reply or the expiration date of the period which can be obtained by a petition and fee for extension of time under 37 CFR 1.136(a).

As to condition A), the attorney John T. McNelis signing the request does not have power of attorney in this application. There is no record of power of attorney ever being given to the attorney making the request.

Kenneth J. Dorner
Special Programs Examiner
Patent Technology Center 3600
(703) 308-0866

KJD/vdb: 7/19/04

UNITED STATES PATENT AND TRADEMARK OFFICE

Commissioner for Patents
United States Patent and Trademark Office
P.O. Box 1450
Alexandria, VA 22313-1450
www.uspto.gov

Paper No. 110105

BIRCH STEWART KOLASCH & BIRCH
PO BOX 747
FALLS CHURCH VA 22040-0747

In re Application of:	:	
Muelller ET AL.	:	PETITION FOR CORRECTION OF
Serial No.: 09/868,845	:	INVENTORSHIP
Filed: September 7, 2001	:	UNDER 37 CFR § 1.48(a)
Attorney Docket No.: 0179-0170P	:	

This is a decision on the petition filed November 21, 2004 to correct inventorship under 37 CFR 1.48(a).

The petition is granted.

In view of the papers filed June 10, 2005, the inventorship of this nonprovisional application has been changed by the addition of:

Karsten HENCO,
Rodney TURNER.

The application will be forwarded to the Office of Initial Patent Examination (OIPE) for issuance of a corrected filing receipt, and correction of Office records to reflect the inventorship as corrected.

Gregory J. Toatley, Jr.
Supervisory Patent Examiner,
Art Unit 2877

SEP 04 2001
UNITED STATES PATENT AND TRADEMARK OFFICE

Commissioner for Patents
United States Patent and Trademark Office
Washington, D.C. 20231
www.uspto.gov

Jacobson Holman PLLC
400 7th Street, N.W., Suite 600
Washington, DC 20004

In re Application of HUANG	:	
U.S. Application No.: 09/868,908	:	DECISION ON PETITION
Int. Application No.: PCT/US97/09742	:	
Int. Filing Date: 04 June 1997	:	UNDER 37 CFR 1.137(b)
Attorney Docket No.: P60998US0	:	
For: AIR CUSHION	:	

This is in response to applicant's "Petition for Revival of an Application for Patent Abandoned Unintentionally Under 37 CFR 1.137(b)" filed 09 July 2001.

BACKGROUND

On 04 June 1997, applicant filed international application PCT/US97/09742. A Demand for international preliminary examination, in which the United States was elected, was filed prior to the expiration of nineteen months from the priority date. Accordingly, the thirty-month period for paying the basic national fee in the United States expired at midnight on 06 December 1999 (04 December 1999 was a Saturday).

International application PCT/US97/09742 became abandoned as to the United States at midnight on 06 December 1999 for failure to pay the basic national fee.

On 09 July 2001, applicant filed the present petition. The petition states that it is accompanied by a proper response under 35 U.S.C. 371, the petition fee set forth in 37 CFR 1.17(m), and a statement that "the entire delay in filing the attached documents to perfect the PCT Application in the United States from the due date until the filing of a grantable petition under 37 CFR 1.137(b) was unintentional."

DISCUSSION

Under 37 CFR 1.137(b), a petition requesting that an application be revived on the grounds of unintentional abandonment must be accompanied by: (1) the required reply unless previously filed, (2) the petition fee as set forth in 37 CFR 1.17(m), (3) a statement that the entire delay in filing the required reply from the due date for the reply until the filing of a grantable

petition was unintentional, and (4) a terminal disclaimer if the application was filed before 08 June 1995.

With regard to item (1), applicant has provided the required reply under 35 U.S.C. 371.

With regard to item (2), applicant has provided the required petition fee.

With regard to item (3), the petition states, "The entire delay in filing the attached documents to perfect the PCT Application in the United States from the due date until the filing of a grantable petition under 37 CFR 1.137(b) was unintentional." This statement is interpreted as a statement that the entire delay in filing the required reply from the due date for the reply until the filing of a grantable petition under 37 CFR 1.137(b) was unintentional. If this is an incorrect interpretation in view of the rules, petitioner is required to provide a statement to that effect.

With regard to item (4), because the international application was filed after 08 June 1995, no terminal disclaimer is required.

CONCLUSION

For the reasons above, the petition under 37 CFR 1.137(b) is GRANTED.

This application has an international filing date of 04 June 1997 and a date under 35 U.S.C. 371 of 09 July 2001.

This application is being forwarded to the United States Designated/Elected Office (DO/EO/US) for further processing in accordance with this decision.

Bryan Tung
PCT Legal Examiner
PCT Legal Office

Telephone: 703-308-6614
Facsimile: 703-308-6459

23 SEP 20

UNITED STATES PATENT and TRADEMARK OFFICE

#7

COMMISSIONER FOR PATENTS
UNITED STATES PATENT AND TRADEMARK OFFICE
P.O BOX 1450
ALEXANDRIA, VA 22313-1450
www.uspto.gov

Fisher, Christen & Sabol
Suite 1108
1725 K Street, N.W.
Washington, D.C. 20006

In re Application of	:	
Erich ARMBRUSTER	:	DECISION ON
Application No.: 09/868,941	:	
PCT No.: PCT/EP00/00240	:	
Int. Filing Date: 13 January 2000	:	
Priority Date: 14 January 1999	:	PETITION UNDER
Attorney Docket No.: L.P. 1825	:	
For: PROCESS FOR PREPARING 1-	:	
(6-METHYLPYRIDIN-3-YL)-2...	:	
ETHANONE	:	37 CFR 1.181

This decision is in response to the "Petition Under Rule 181/182 To Accept As True Copies Of Documents Filed By Certificate Of Mailing (Rule 8)" filed 09 September 2003, requesting acceptance of a copy of the Combined Declaration purportedly filed in the USPTO on 01 February 2002. Applicants have submitted, inter alia, a copy of the 01 February 2002 PTO stamped itemized postcard receipt. The itemized postcard lists, inter alia, the following item: six executed declaration.

BACKGROUND

On 16 July 2001, applicants filed a transmittal letter for entry into the national stage in the United States which was accompanied by, inter alia, the requisite basic national fee as required by 35 U.S.C. 371(c)(1), and a copy of the international application. Applicant, however, did not satisfy the requirement set forth by 35 U.S.C. 371(c)(4) because no executed Declaration or Oath was provided with the transmittal letter.

On 14 August 2001, the United States Designated/Elected Office (DO/EO/US) mailed a "NOTIFICATION OF MISSING REQUIREMENTS UNDER 35 U.S.C. 371 IN THE UNITED STATES DESIGNATED/ELECTED OFFICE (DO/EO/US)" (Form PUT/DO/EO/905) which informed applicant, inter alia, that an "Oath or Declaration of the inventors, in compliance with 37 CFR 1.47(a) and (b), identifying the application by International application number and international filing date" must be submitted within one month from its 14 August 2001 date of mailing or by 31 months from the priority date, whichever is later, in order to avoid abandonment of the national stage application. In addition, the surcharge for providing the oath or declaration later that the appropriate 20 or 30 months from the priority date (37 CFR 1.492(e))

BEST AVAILABLE COPY

On 09 September 2003 submitted this petition indicating that the response to the Notification of Missing Requirements was timely and that the copies submitted with this petition are true copies of the six executed declarations filed by the certificate of mailing and received at the Office on 01 February 2002.

DISCUSSION

Applicant's present petition accompanied by a copy of the following documents, filed purportedly with the PTO as indicated in the stamped postcard:

(1) six executed declarations (one for inventor)
(2) copy of notification of missing parts
(3) check of amount of $130

The postcard lists the above items and bears a USPTO date of stamp as 01 February 2002.

MPEP 503 provides:

> A postcard receipt which itemizes and properly identifies the papers which are being filed serves as *prima facie* evidence of receipt in the PTO of all the items listed thereon on the date stamped thereon by the PTO.

Applicant's postcard is accepted as *prima facie* that a Combined Declaration consisting of six executed declarations was deposited with the U.S. Patent and Trademark Office on 01 February 2001.

Accordingly, the date of receipt for the Combined Declaration is 01 February 2001 and each Declaration is complete since each indicates all of the inventors. Thus, the Combine Declaration complies with 37 CFR 1.63

However, upon review of the file the second submitted and corrected translation of the international application into English as required under 35 USC 371 (c)(2) was not found in the file. Applicant will need to submit a new copy of the translation. In addition, the $130.00 for the processing fee for an English translation thirty months from the priority date has not been provided.

DECISION

The petition under 37 CFR 1.181 is **GRANTED**.

Applicant is required to provide a copy of the English translation and the processing fee within TWO (2) MONTHS from the mail date of this Decision. Failure to respond will result in the abandonment of the application. Extensions of time under 37 CFR 1.136(a) are available.

Any further correspondence with respect to this matter should be addressed to the Mail Stop PCT, Commissioner for Patents, Office of PCT Legal Administration, P.O. Box 1450, Alexandria, Virginia 22313-1450, with the contents of the letter marked to the attention of the Office of PCT Legal Administration.

Rafael Bacares
PCT Legal Examiner
PCT Legal Office
Telephone: (703) 308-6312
Facsimile: (703) 308-6459

Leonard Smith
PCT Legal Examiner
PCT Legal Office

20 AUG 2004

UNITED STATES PATENT AND TRADEMARK OFFICE

COMMISSIONER FOR PATENTS
UNITED STATES PATENT AND TRADEMARK OFFICE
P.O. BOX 1450
ALEXANDRIA, VA 22313-1450
www.uspto.gov

Theodore Gottlieb, Ph.D
Norris, McLaughlin & Marcus
220 East 42nd Street
New York, NY 10017

In re Application of	:	
WALLUKAT, et al.	:	
U.S. Application No.: 09/868,967	:	DECISION ON PETITION
PCT No.: PCT/DE99/04112	:	
Int. Filing Date: 22 December 1999	:	UNDER 37 CFR 1.181
Priority Date: 24 December 1998	:	
Attorney Docket No.: 101195-52	:	
For: PEPTIDES AND THE AT RECEPTOR AND THEIR USE FOR PREECLAMPSIA AND MALIGN HYPERTENSION	:	

This decision is in response to applicant's "Petition to Withdraw a Holding of Abandonment" filed 05 February 2004 in the United States Patent and Trademark Office (USPTO). The petition is being treated as a petition under 37 CFR 1.181. No petition fee is due.

BACKGROUND

On 25 July 2001, applicant was mailed a NOTIFICATION OF MISSING REQUIREMENTS UNDER 35 U.S.C. 371 (Form PCT/DO/EO/905) informing applicant of the need to provide an executed oath or declaration of the inventors, in compliance with 37 CFR 1.497(a) and (b), identifying the application by the International Application number and international filing date, as well as an English translation of the international application. In addition, applicant was advised of the need to pay the surcharge for providing an oath or declaration of the inventor later than thirty months from the priority date. Applicant was given two months to respond and advised that this time period could be extended with a proper petition and payment of fees.

On 24 September 2001, applicant filed an appropriate response.

On 18 January 2002, applicant filed a sequence listing for the present application.

On 22 November 2002, applicant was mailed a NOTIFICATION OF DEFECTIVE RESPONSE (Form PCT/DO/EO/916) indicating that a compliant sequence listing was still required. Applicant was afforded one month to file an appropriate response.

On 24 December 2002, applicant filed an additional sequence listing.

On 05 December 2003, applicant was mailed a NOTIFICATION OF ABANDONMENT (Form PCT/DO/EO/909) acknowledging the reply of 24 December 2002 and notifying applicant that above-identified application was abandoned as to the United States.

On 05 February 2004, applicant filed the present petition to withdraw the holding of abandonment.

DISCUSSION

Applicant seeks withdrawal of the holding of abandonment in the present application based on the filing of 24 December 2002. The USPTO does not dispute that applicant filed a timely response on 24 December 2002. This filing was received on 24 December 2002 with a certification that the filing was deposited for mailing on 19 December 2002. However, the sequence listing filed on that date did not comply with 37 CFR 1.821-1.825. As the time period for responding to the originally mailed form PCT/DO/EO/905 and subsequent forms PCT/DO/EO/916 had expired with a compliant CRF still outstanding, thus the application was held abandoned.

However, a review of the application file finds that the Form PCT/DO/EO/905 mailed 25 July 2001 did not indicate that a sequence listing was needed. The first indication that applicant was required to file a compliant sequence listing was the Form PCT/DO/EO/916 (Notification of a Defective Response) mailed 07 December 2001. As such, applicant was never afforded a proper period of response, namely two months extendable pursuant to 37 CFR 1.136(a). Therefore, applicant's petition to withdraw the holding of abandonment is granted. Further review of the application file finds that the most recently filed CRF and sequence listing may be lacking as to a particular sequence which appears in claims 3 and 5. (See attached OIPE Routing Sheet). Therefore, this application will be forwarded to the United States Designated/Elected Office (US/DO/EO) for processing and mailing of a new Form PCT/DO/EO/905.

CONCLUSION

Applicant's petition under 37 CFR 1.181 to withdraw the holding of abandonment for the present national stage application is **GRANTED**.

The "Notification of Abandonment" mailed 05 December 2003 is hereby **VACATED**.

This application is being forwarded to the United States Designated/Elected Office (US/DO/EO) for continued processing including the issuance of a Notification of Missing Requirements (Form PCT/DO/EO/905) indicating that an executed oath or declaration of the inventors is required.

Derek A. Putonen
Attorney Advisor
Office of PCT Legal Administration
Tel: (703) 305-0130
Fax: (703) 308-6459

Attach: OIPE Routing Sheet re: CRF

27 APR 2006

UNITED STATES PATENT AND TRADEMARK OFFICE

Commissioner for Patents
United States Patent and Trademark Office
P.O. Box 1450
Alexandria, VA 22313-1450
www.uspto.gov

Mark Marin
Norris, McLaughlin & Marcus
875 Third Avenue, 18th Floor
New York, NY 10022

In re Application of	:	
WALLUKAT, et al.	:	
U.S. Application No.: 09/868,967	:	DECISION ON PETITION
PCT No.: PCT/DE99/04112	:	
Int. Filing Date: 22 December 1999	:	UNDER 37 CFR 1.181
Priority Date: 24 December 1998	:	
Attorney Docket No.: 101195-52	:	
For: PEPTIDES AND THE AT RECEPTOR AND	:	
THEIR USE FOR PREECLAMPSIA AND	:	
MALIGN HYPERTENSION	:	

This decision is in response to applicant's "Petition to Withdraw a Holding of Abandonment" filed 16 February 2006 in the United States Patent and Trademark Office (USPTO). The petition is being treated as a petition under 37 CFR 1.181. No petition fee is due. For the reasons discussed below, applicant's concurrently filed conditional petition to revive under 37 CFR 1.137(b) will not be considered and the petition fee payment will be refunded to deposit account number 14-1263.

BACKGROUND

On 20 August 2004, applicant was mailed a decision granting applicant's petition under 37 CFR 1.181 to withdraw the holding of abandonment in the present national stage application. The NOTIFICATION OF ABANDONMENT (Form PCT/DO/EO/909) mailed 05 December 2003 was vacated. The application was forwarded to the United States Designated/Elected Office (US/DO/EO) for the issuance of a new Notification of Missing Requirements (Form PCT/DO/EO/905).

On 16 December 2005, applicant was mailed a NOTIFICATION OF ABANDONMENT (Form PCT/DO/EO/909) notifying applicant that above-identified application was abandoned as to the United States for failure to response to a Form PCT/DO/EO/905 mailed 22 January 2002.

On 16 February 2006, applicant filed the present petition to withdraw the holding of abandonment.

DISCUSSION

Applicant's petition to withdraw the holding of abandonment is **GRANTED**. As discussed in the decision mailed 20 August 2004, a review of the application file finds that the

Form PCT/DO/EO/905 mailed 25 July 2001 did not indicate that a sequence listing was needed. The first indication that applicant was required to file a compliant sequence listing was the Form PCT/DO/EO/916 (Notification of a Defective Response) mailed 07 December 2001. As such, applicant was never afforded a proper period of response, namely two months extendable pursuant to 37 CFR 1.136(a). Further review of the application file found that the most recently filed CRF and sequence listing might have been lacking as to a particular sequence which appears in claims 3 and 5. Therefore, this application was to be forwarded to the United States Designated/Elected Office (US/DO/EO) for processing and mailing of a new Form PCT/DO/EO/905. A review of the applicant file finds that a new Form PCT/DO/EO/905 was never mailed to applicant. In addition, while the Form PCT/DO/EO/909 indicates that the applicant failed to respond to a Form PCT/DO/EO/905 mailed 22 January 2002; in fact the form mailed on 22 November 2002 was a Notification of Defective Response (Form PCT/DO/EO/916) as discussed in the decision mailed 20 August 2004.

As the petition to withdraw the holding of abandonment has been granted it is not necessary to consider applicant's conditional petition to revive under 37 CFR 1.137(b).

CONCLUSION

Applicant's petition under 37 CFR 1.181 to withdraw the holding of abandonment for the present national stage application is **GRANTED**.

The "Notification of Abandonment" mailed 16 December 2005 is hereby **VACATED**.

This application is being forwarded to the United States Designated/Elected Office (US/DO/EO) for continued processing including the issuance of a Notification of Missing Requirements (Form PCT/DO/EO/905) indicating that a substitute computer readable form (CRF) of the sequence listing is required.

Derek A. Putonen
Attorney Advisor
Office of PCT Legal Administration
Tel: (571) 272-3294
Fax: (571) 273-0459

APR 2 5 2002

UNITED STATES PATENT AND TRADEMARK OFFICE

Commissioner for Patents
United States Patent and Trademark Office
Washington, D.C. 20231
www.uspto.gov

PENNIE & EDMONDS LLP
1667 K STREET, N.W.
WASHINGTON, D.C. 20006

In re Application of	:	DECISION ON
Stuart A. KAUFFMAN et al	:	
Application No.: 09/868,981	:	REQUEST UNDER
PCT No.: PCT/US99/30640	:	
Int. Filing Date: 22 December 1999	:	37 CFR 1.497(d)
Priority Date: 22 December 1998	:	
Attorney Docket No.: 9392-016-999	:	
For: A SYSTEM AND METHOD FOR THE	:	
ANALYSIS AND PREDICTION OF	:	
ECONOMIC MARKETS	:	

This is a decision on applicant's "RESPONSE TO NOTIFICATION OF DEFECTIVE RESPONSE" filed in the Patent and Trademark Office (PTO) on 22 January 2002, forwarding an executed declaration which adds inventor Vince M. Darley. The communication has been treated as a request under 37 CFR 1.497(d). Pursuant to authorization therein, the required petition fee of $130.00 (37 CFR 1.17(I)) has been charged to counsel's Deposit Account No. 16-1150.

BACKGROUND

On 22 December 1999, applicants filed international application No. PCT/US99/30640, which designated the United States. A Demand electing, *inter alia*, the United States, was filed on 12 July 2000 prior to the expiration of 19 months from the priority date. Consequently, the deadline for entry into the national stage by paying the basic national fee in the U.S. expires as of midnight of 22 June 2001.

On 22 June 2001, applicants filed a transmittal letter for entry into the national stage in the United States which was accompanied by, *inter alia*, payment of the full U.S. basic national fee and an executed declaration was filed.

On 22 January 2002, the PTO mailed a "Notification of Missing Requirements Under 35 U.S.C. 371" (Form PCT/DO/EO/905) requiring a declaration in compliance with 37 CFR 1.497(a)-(b) and a surcharge for providing the oath and declaration later that the appropriate 20 or 30 months from the priority date.

On 22 January 2002 applicants' counsel filed a "RESPONSE TO NOTIFICATION OF DEFECTIVE RESPONSE", which included a Declaration of the inventors. In this case, inventor VINCE M. DARLEY who is on the Declaration was not in the published international application.

DISCUSSION

A request under 37 CFR 1.497(d) states that "(d) If the oath or declaration filed pursuant to 35 U.S.C. 371(c)(4) ... the oath or declaration must be accompanied by:

(1) a statement from each person being added as an inventor and from each person being deleted as an inventor that the error in inventorship occurred without deceptive intention on his or her part;
(2) the fee set forth in § 1.17(I); and
(3) If an assignment has been executed by any of the original named inventors, the written consent of the assignee (see 37 CFR §3.73(b) of this chapter)."

A review of the application file reveals that applicants have satisfied items (1)- (3) but the not the introductory paragraph of 37 CFR 1.497(d).

With regard to item (1), the remarks submitted on 22 January 2002 are sufficient. VINCE M. Darley states that he was mistakenly not included as a named inventor of international application US99/30640 and that this error in inventorship in this international application occurred without any deceptive intention on his part.

With regard to item (2) it is satisfied because the processing fee of $130.00 has been charged to Deposit Account 16-1150.

With regard to item (3), Bios Group Inc., the assignee, consents to the addition of inventorship of Vince M. Darley as an inventor of above application and has filed in the present request papers establishing their right to take action under 37 CFR §3.73(b).

With regard to the introductory paragraph of 35 USC 1.497(d), the declarations filed pursuant 35 U.S.C. 371(c)(4) are defective because they do not comply with 37 CFR 1.63. The Declarations do not appear to be complete; that is, a declaration with three sheets with all the signatures of the inventors. In this case, there are many more pages of sheets 2-3 (with the signature of the inventors) of the declaration than sheet 1, which there are only two. Therefore, some of submitted the declarations are incomplete.

Accordingly, the request does not meet the requirements under 37 CFR 1.497(d).

CONCLUSION

For the reasons above, the request under 37 CFR 1.497(d) is **DISMISSED** without prejudice.

If reconsideration on the merits of this petition is desired, a proper reply must be filed within TWO (2) MONTHS from the mail date of this decision. Any reconsideration request should include a cover letter entitled "Renewed Request Under 37 CFR 1.497(d)". No additional petition fee is required. Extensions of time may be obtained under 37 CFR 1.136(a).

Any further correspondence with respect to this matter should be addressed to the Commissioner for Patents, Office of PCT Legal Administration, Box PCT, Washington, D.C. 20231, with the contents of the letter marked to the attention of the PCT Legal Office..

Rafael Bacares
PCT Legal Examiner
PCT Legal Office
Telephone: (703) 308-6312
Facsimile: (703) 308-6459

Leonard E. Smith
PCT Legal Examiner
PCT Legal Office

18 SEP 2002
UNITED STATES PATENT AND TRADEMARK OFFICE

COMMISSIONER FOR PATENTS
UNITED STATES PATENT AND TRADEMARK OFFICE
WASHINGTON, D.C. 20231
www.uspto.gov

PENNIE & EDMONDS LLP
1667 K STREET, N.W.
WASHINGTON, D.C. 20006

In re Application of	:	DECISION ON
Stuart A. KAUFFMAN et al	:	
Application No.: 09/868,981	:	RENEWED
PCT No.: PCT/US99/30640	:	
Int. Filing Date: 22 December 1999	:	REQUEST UNDER
Priority Date: 22 December 1998	:	
Attorney Docket No.: 9392-016-999	:	37 CFR 1.497(d)
For: A SYSTEM AND METHOD FOR THE	:	
ANALYSIS AND PREDICTION OF	:	
ECONOMIC MARKETS	:	

This is a decision on applicant's "RENEWED REQUEST UNDER 37 CFR 1.497(d)" filed in the USPTO on 25 June 2002.

BACKGROUND

In a decision from this Office on 25 April 2002, the request submitted on 22 January 2002 was dismissed. The decision stated that the declarations filed pursuant 35 U.S.C. 371(c)(4) was defective because it did comply with 37 CFR 1.63. The Declarations did not appear to be complete; that is, each set of declaration would required the three sheets (page 1 declaration, and page 2 and 3 with the signatures of the inventors).

On 25 June 2002 applicant's representative filed the present renewed request accompanied by, inter alia, what appears to be three sets of the declarations (sheets 1-3) that taken together would comply with 37 CFR 1.63.

DISCUSSION

A review of the renewed request reveals that applicant has still not satisfied item (3) of 37 CFR 1.497(d). In regard to item (3), applicants has filed three sets of declarations but none of these declarations are complete copies containing the inventors' signatures. The three sets are not complete copies of the originals because the third page found in the three sets of declarations is the same copy (it has the same signatures with their respective dates). The third page has the same signatures on all three sets and some of these signatures are dated after the signatures of inventors 1 through 5 found on page 2. Likewise, the signature of KAUFFMAN found in page 2 of the declaration is found in all three sets, which would indicate that this page is a copy that the other inventors of page 2 signed on.

Accordingly, the request does not meet the requirements under 37 CFR 1.497(d).

CONCLUSION

For the reasons above, the request under 37 CFR 1.497(d) is **DISMISSED** without prejudice.

If reconsideration on the merits of this petition is desired, a proper reply must be filed within TWO (2) MONTHS from the mail date of this decision. Any reconsideration request should include a cover letter entitled "Renewed Request Under 37 CFR 1.497(d)". No additional petition fee is required. Extensions of time may be obtained under 37 CFR 1.136(a).

Any further correspondence with respect to this matter should be addressed to the Commissioner for Patents, Office of PCT Legal Administration, Box PCT, Washington, D.C. 20231, with the contents of the letter marked to the attention of the PCT Legal Office..

Rafael Bacares
PCT Legal Examiner
PCT Legal Office
Telephone: (703) 308-6312
Facsimile: (703) 308-6459

Leonard E. Smith
PCT Legal Examiner
PCT Legal Office

18 SEP 2002

UNITED STATES PATENT AND TRADEMARK OFFICE

COPY

COMMISSIONER FOR PATENTS
UNITED STATES PATENT AND TRADEMARK OFFICE
WASHINGTON, D.C. 20231
www.uspto.gov

response to petition due 11/18/02

REFERRED TO GJG
RECEIVED PEDC
SEP 23 2002
O.K. for filing

PENNIE & EDMONDS LLP
1667 K STREET, N.W.
WASHINGTON, D.C. 20006

In re Application of	:	DECISION ON
Stuart A. KAUFFMAN et al	:	
Application No.: 09/868,981	:	RENEWED
PCT No.: PCT/US99/30640	:	
Int. Filing Date: 22 December 1999	:	REQUEST UNDER
Priority Date: 22 December 1998	:	
Attorney Docket No.: 9392-016-999	:	37 CFR 1.497(d)
For: A SYSTEM AND METHOD FOR THE	:	
ANALYSIS AND PREDICTION OF	:	
ECONOMIC MARKETS	:	

This is a decision on applicant's "RENEWED REQUEST UNDER 37 CFR 1.497(d)" filed in the USPTO on 25 June 2002.

BACKGROUND

In a decision from this Office on 25 April 2002, the request submitted on 22 January 2002 was dismissed. The decision stated that the declarations filed pursuant 35 U.S.C. 371(c)(4) was defective because it did comply with 37 CFR 1.63. The Declarations did not appear to be complete; that is, each set of declaration would required the three sheets (page 1 declaration, and page 2 and 3 with the signatures of the inventors).

On 25 June 2002 applicant's representative filed the present renewed request accompanied by, inter alia, what appears to be three sets of the declarations (sheets 1-3) that taken together would comply with 37 CFR 1.63.

DISCUSSION

A review of the renewed request reveals that applicant has still not satisfied item (3) of 37 CFR 1.497(d). In regard to item (3), applicants has filed three sets of declarations but none of these declarations are complete copies containing the inventors' signatures. The three sets are not complete copies of the originals because the third page found in the three sets of declarations is the same copy (it has the same signatures with their respective dates). The third page has the same signatures on all three sets and some of these signatures are dated after the signatures of inventors 1 through 5 found on page 2. Likewise, the signature of KAUFFMAN found in page 2 of the declaration is found in all three sets, which would indicate that this page is a copy that the other inventors of page 2 signed on.

Accordingly, the request does not meet the requirements under 37 CFR 1.497(d).

CONCLUSION

For the reasons above, the request under 37 CFR 1.497(d) is **DISMISSED** without prejudice.

If reconsideration on the merits of this petition is desired, a proper reply must be filed within TWO (2) MONTHS from the mail date of this decision. Any reconsideration request should include a cover letter entitled "Renewed Request Under 37 CFR 1.497(d)". No additional petition fee is required. Extensions of time may be obtained under 37 CFR 1.136(a).

Any further correspondence with respect to this matter should be addressed to the Commissioner for Patents, Office of PCT Legal Administration, Box PCT, Washington, D.C. 20231, with the contents of the letter marked to the attention of the PCT Legal Office..

Rafael Bacares
PCT Legal Examiner
PCT Legal Office
Telephone: (703) 308-6312
Facsimile: (703) 308-6459

Leonard E. Smith
PCT Legal Examiner
PCT Legal Office

0 2 JUN 2003

#11

UNITED STATES PATENT and TRADEMARK OFFICE

COMMISSIONER FOR PATENTS
UNITED STATES PATENT AND TRADEMARK OFFICE
P.O BOX 1450
ALEXANDRIA, VA 22313-1450
www.uspto.gov

PENNIE & EDMONDS LLP
1667 K STREET, N.W.
WASHINGTON, D.C. 20006

In re Application of	:	DECISION ON
Stuart A. KAUFFMAN et al	:	
Application No.: 09/868,981	:	SECOND RENEWED
PCT No.: PCT/US99/30640	:	
Int. Filing Date: 22 December 1999	:	REQUEST UNDER
Priority Date: 22 December 1998	:	
Attorney Docket No.: 9392-016-999	:	37 CFR 1.497(d)
For: A SYSTEM AND METHOD FOR THE	:	
ANALYSIS AND PREDICTION OF	:	
ECONOMIC MARKETS	:	

This is a decision on applicants' "RENEWED REQUEST UNDER 37 CFR 1.497(d)" filed in the USPTO on 18 March 2003.

BACKGROUND

In a decision from this Office on 18 September 2002, the request submitted on 25 June 2002 was dismissed. The decision stated that the declarations filed pursuant 35 U.S.C. 371(c)(4) were defective because they did not comply with item (3) of 37 CFR 1.497(d). The Declarations were not complete.

On 25 June 2002 applicants' representative filed the present renewed request.

DISCUSSION

A review of the declarations submitted on 25 June 2002 reveals that the declarations complied with 37 CFR 1.63

Accordingly, the request does meet the requirements under 37 CFR 1.497(d).

CONCLUSION

For the reasons above, the request under 37 CFR 1.497(d) is **GRANTED.**

This application is being returned to the United States Designated/Elected Office (DO/EO/US) for continued processing, including the preparation and mailing of a Notification of Acceptance (Form PCT/DO/EO/903). The 35 U.S.C. 371 date of this application is **25 June 2002.**

Rafael Bacares
PCT Legal Examiner
PCT Legal Office
Tel: (703) 308-6312
Fax: (703) 308-6459

Richard Cole
PCT Legal Examiner
PCT Legal Office

SPE RESPONSE FOR CERTIFICATE OF CORRECTION

Paper No.: _____

DATE : 5/16/2005

TO SPE OF : ART UNIT 1600

SUBJECT : Request for Certificate of Correction on Patent No.: 6,790,457

A response is requested with respect to the accompanying request for a certificate of correction.

Please complete this form and return with file, within 7 days to:
Certificates of Correction Branch - PK 3-922
Palm location **7580** - Tel. No. 305-8309

With respect to the change(s) requested, correcting Office and/or Applicant's errors, should the patent read as shown in the certificate of correction? No new matter should be introduced, nor should the scope or meaning of the claims be changed.

Are items concerning (56) okay to enter?

Ernest C. White, LIE305-8339
Certificates of Correction Branch

Thank You For Your Assistance

The request for issuing the above-identified correction(s) is hereby:
Note your decision on the appropriate box.

- ☐ **Approved** — All changes apply.
- ☐ **Approved in Part** — Specify below which changes **do not** apply.
- ☒ **Denied** — State the reasons for denial below.

Comments:

DOCUMENT IS NOT READABLE. POOR QUALITY SCAN OF FAX.

MPW

MICHAEL P. WOODWARD
SUPERVISORY PATENT EXAMINER
TECHNOLOGY CENTER 1600

SPE — **Art Unit** 1615

#17

UNITED STATES PATENT AND TRADEMARK OFFICE

COMMISSIONER FOR PATENTS
UNITED STATES PATENT AND TRADEMARK OFFICE
P.O. BOX 1450
ALEXANDRIA, VA 22313-1450
www.uspto.gov

JAN 13 2004

BERNHARD SAXE
FOLEY & LARDNER
SUITE 500
3000 K STREET NW
WASHINGTON DC 2007-5109

In re Application of	:
MURDIN et al	:
Serial No.: 09/868,987	: Decision on Petition
Filing Date: 23 December 1999	:
Attorney Docket No. 032931/0253	:

This letter is in response to the Petition filed on 27 July 2003, under 37 CFR 1.144 to review the restriction requirement. The delay in acting upon this petition is regretted.

BACKGROUND

This application was filed with 39 original claims under 35 USC 371 as the national stage filing of PCT/CA99/01230, filed 23 December 1999 which claims priority to a number of US provisional applications. On 4 October 2002, the examiner restricted the claims into five groups and then restricted each group into 26 additional groups in view of the nucleic acid sequences SEQ ID Nos. 1-26.

On 4 December 2002, applicants responded with an amendment to claims 1, 2, 8, 9, 18, 19, 21, 27 and 28, and an election of Group II, claims 1-19, 25 and 36, drawn to DNA, host cells, and a method of preventing infection, with traverse. Applicants selected SEQ ID Nos. 1 and 14 for prosecution. Applicants explained that nucleic and amino acid sequence, SEQ ID No. 1 encodes the polypeptide CPN100686 RY-54, a putative 98kDa outer membrane protein, which has SEQ ID No. 14. The response also contained lengthy arguments concerning the restriction between groups and between the sequences.

On 28 February 2003, the examiner acknowledged the election of Group II and DNA having SEQ ID No. 1. The examiner overlooked the election of DNA encoding SEQ ID No. 14. Claims 2, 8-14, 16, 18-19 and 36 were under examination with respect to DNA having SEQ ID No. 1. Claims 1, 3-7, 15, 17 and 25 were improperly withdrawn from consideration as being directed to other non-elected DNA, including DNA encoding SEQ ID No. 14. Claims 20-24, 26-35, 37-39 were withdrawn from consideration pursuant to 37 CFR 1.142(b), as being drawn to non-elected inventions. The lengthy traversal was not sufficiently addressed nor considered by the examiner.

Claims 2, 8-14, 18-19 and 36 were rejected under provisionally obviousness-type double patenting. Claim 2 was rejected under 35 USC 101 as being drawn to products of nature. Claims 2, 4-14, 16, 18-19 and 36 were rejected under 35 USC 112, first and second paragraph. Claim 18-19 were rejected under 35 USC 102(b) as being anticipated by probes or primers from various laboratory catalogs.

On 27 June 2003, applicants filed a response and an amendment to claims 2, 8, 9, 10-14, 16, 18-19 and 36 and added new claims 40-41, which have been renumbered by the Office as claims 79 and 80, under Rule 1.126. Applicants also filed this petition.

DISCUSSION

The file record and petition have been reviewed carefully. The petition states that unity of invention exists between all pending claims because Kalman et al is not prior art. In support of this argument, applicants provided Exhibit A, showing when Accession AE 001641 was first seen at NCBI.

Following an extensive review of the various provisional applications from which this application claims priority, Office concedes that Kalman et al cannot be used to demonstrate that the linking technical feature is not a contribution over the prior art.

Moreover, a review of the groupings in the lack of unity determination shows that several groups contain overlapping subject matter. Because the DNA sequence SEQ ID No. 1 encodes amino acid sequence SEQ ID No. 14, it was not proper to have restricted between DNA described in terms of its nucleic acid sequence and DNA described in terms of the protein sequence it encodes.

In order to correct these deficiencies, the previous restriction is now withdrawn and replaced with the restriction requirement set forth below.

Restriction is required under 35 U.S.C. 121 and 372.

This application contains the following groups of inventions, which are not so linked as to form a single general inventive concept under PCT Rule 13.1, in accordance with 37 CFR 1.499.

Group I, claims 1- 19, 25, 36, 38(a), 79 and 80 drawn to DNA, vector, host cell, kit and a method of expressing the DNA and a method of preventing infection by administering the DNA.

Group II, claims 20-24, 27-34, 38(b) drawn to polypeptide and a vaccine.

Group III, claims 26, 35 and 38(c) drawn to an antibody.

Group IV, claim 37(a) drawn to a method of detecting Chlamydia infection using nucleic acid.

Group V, claim 37(b) drawn to a method of detecting Chlamydia infection using a peptide.

Group VI, claim 37(c) drawn to a method of detecting Chlamydia infection using an antibody.

Group VII, claim 39 drawn to a method for inducing an immune response using a polypeptide.

The inventions listed as Groups I-VII do not relate to a single general inventive concept under PCT Rule 13.1 because, under PCT Rule 13.2, they lack the same or corresponding special feature technical features for the following reasons:

The technical feature linking groups I-VII appears to be that they are all related to Chlamydia nucleic acids, peptides, antibodies and various methods of using said products. However, Griffais (see the sequence alignment and SEQ ID No. 1 of U.S. Patent No. 6,559,294) discloses a nucleic acid comprising a nucleic acid sequence, which encodes an immunogenic fragment of polypeptide comprising 50 (see the sequence alignment) consecutive amino acids, thus meeting the limitations of claim 2(c). Moreover, Griffais has a filing date of 11/23/98, which is before the filing date of the instant application's oldest provisional application, 60/113,280, filed on 12/23/98. Therefore, the technical feature of linking groups I-VII does not constitute a special technical feature as defined by PCT Rule 13.2, as it does not define a contribution over the prior art and hence unity of invention is lacking.

Group I, directed to nucleic acid having SEQ ID No. 1 and Group II, directed to protein having SEQ ID No. 14 are not so linked as to under PCT Rule 13.1 because, under PCT Rule 13.2, they lack the same or corresponding special technical features for the following reasons:

The claimed nucleic acid and polypeptide share no common structure, no common function and no property. Therefore, where structural identity is required, such as for hybridization or expression of protein, each product appears to perform a different function in that peptides elicit a specific antibody response, nucleotides hybridize to DNA and antibodies bind to a specific binding site on antigen. Furthermore, they do not make a contribution over the prior art, therefore forming a single general inventive concept under Rule 13.1 because Griffais, US Patent No: 6,559,294 discloses a nucleic acid sequence, which encodes an immunogenic fragment of a polypeptide comprising 50 consecutive amino acids. Hence, unity is lacking among nucleic acid and protein.

The special technical feature of Group I is considered to be polynucleotide, which is not required for Groups II, III, V, VI or VII.

The special technical feature of Group II is considered to be polypeptide which is not required for Groups I, III, IV, or VI.

The special technical feature of Group III considered to be antibody that shares no common structure, property and function from Inventions I-II since it has an inherent affinity, avidity, and specificity that DNA or a simple protein is not capable of expressing and do not require each other for their practice. The antibody of Group III is not required for Groups I, II, IV, V or VII.

The technical feature of Groups IV-VII, respectively, is considered to be methods utilizing nucleic acid, peptides, antibodies or polypeptides, products that share no common structure, property and function and methods of using products so as to form a single general inventive concept under Rule 13.1. Hence, unity is lacking among groups IV-VII.

Group IV corresponds to the second method of using the product of Group I. Groups V and VII correspond to the first and second methods of using the second product, Group II. Group VI corresponds to a method of using the third product, Group III. 37 CFR 1.475 allows for the grouping of the first method of using and the first method of making with the first product. Additional methods are not required to be grouped with additional products. Accordingly, Groups I-VII are not so linked by the same or a corresponding special technical feature as to form a single general inventive concept.

Applicants' traversal in Paper No. 10 was not sufficiently addressed in the first action on the merits. In the interest of completing the file record, the traversal will be considered here. The traversal was on the ground(s) that unity of invention is present in all the claims, search and examination of the entire application would not be an undue burden. The arguments were found partially persuasive, in as shown in the new grouping presented above.

The restriction requirement between DNA comprising SEQ ID No. 1 and DNA that encodes SEQ ID No. 14 has been withdrawn. Claim 38, directed to a kit comprising DNA, protein or antibody, has been rejoined to the product claims of Groups I, II and III, respectively.

Non-persuasive arguments are addressed and discussed below.

In Part (A) of the traversal, applicants argue that DNA and the polypeptide have the same essential structural element. Applicants state that the polypeptide SEQ.ID.NO: 14 and a nucleic acid encoding it constitute a single inventive concept and points to part (f) (ii) of the PCT Administrative Instructions, which states that "the structural element may be a single component or combination of individual components linked together.

Applicants further state that claims 1-39 are linked by the common generic special technical feature as defined by PCT Rule 13.2 (37CFR1.475(a) and therefore all the claims with respect to SEQ.ID.NO: 1 and 14 should be examined together.

These arguments are not persuasive because the same or corresponding technical feature does not link the DNA and polypeptide since they do not share a common structure or function or property as indicated above in the restriction. The DNA is made of nucleic acids and polypeptide is made of amino acids. Thus, these two products are not linked by the same or corresponding technical feature as defined by PCT Rule 13.2. Moreover, according to PCT Rule 13.2, the expression special technical features shall mean those technical features that define a contribution which each of the claimed inventions, considered as a whole, makes over the prior art. Specifically, Griffais (US Patent No. 6,559,294) discloses a nucleic acid comprising a nucleic acid sequence, which encodes an immunogenic fragment comprising 50 consecutive amino acids. Since the invention is not a contribution over the prior art, the DNA

and protein do not share a special technical feature and thus do not constitute a single inventive concept.

Applicants also argue in Part (A) that DNA and protein are related as intermediate and final product. To be considered as intermediate and final product, the intermediate is converted to the final product. This is not the situation that occurs during the transcription and translation of DNA to produce RNA and then protein. When the protein is produced, the DNA still exists in the form of DNA. Thus the DNA and protein are related as an intermediate and final product.

With respect to arguments in Part (B), applicants point to Example 17 of the PCT Administrative Instructions, and argue for the joining of DNA and protein groups. If the DNA and protein shared a technical feature (i.e. the broadest DNA claimed all encode the protein, and the broadest protein claimed is encoded by the DNA) and if that technical feature is special (no prior art teaching either the broadest DNA or protein claims) then applicants' arguments would be persuasive. However in view of the breadth of the claims and the prior art cited on the DNA, unity is lacking between the DNA and protein groups.

Concerning Part (C), applicants argue that the protein and antibody are related like a plug and a socket, pointing to Example 8 of the Annex B, PCT Administrative Instructions. This argument is not persuasive, because antibody-antigen binding is not limited to one region of the antigen. Particular antibodies may bind to many different regions of the antigen and those antibodies are not interchangeable, one with another. Antigens comprise many different epitopes, while antibodies are specific for the one epitope to which they bind. A socket, on the other hand, comprises only one site for which a plug may bind. Thus, the antibody-antigen relationship fails to share a one-to-one corresponding technical feature as in Example 8.

Concerning Part (D), applicants are correct that PCT Rules allow for methods of making and using a product to be grouped back with that product, once that product is free of the prior art. However, this grouping is limited to the rejoinder of the first method of making and the first method of use with the first claimed product. See 37 CFR 1.475. If the first product does not make a contribution over the prior art, then the corresponding methods need not be grouped with it, because the linking technical feature would not be not considered special. Because the product is not a contribution over the prior art, the Office is not required to group the first method of use with the first product. However, in the interest of consistency, because the first restriction requirement grouped the first invention with its first method of use (claim 36) and because the Office has already completed an Office action on the method of use, this grouping will be maintained. With regard to the arguments for joining the method of making with the first product, it is noted that methods of producing DNA are claimed. See Rejoinder Notice below for additional information.

Concerning Part (E), in which applicants present arguments directed at the burden of search, it is noted that search burden is not criteria for unity of invention determination.

Rejoinder Notice

The examiner has required restriction between product and process claims. Where applicant elects claims directed to the product, and a product claim is subsequently found allowable, withdrawn process claims that depend from or otherwise include all the limitations of the allowable product claim will be rejoined in accordance with the provisions of MPEP § 821.04. **Process claims that depend from or otherwise include all the limitations of the patentable product** will be entered as a matter of right if the amendment is presented prior to final rejection or allowance, whichever is earlier. Amendments submitted after final rejection are governed by 37 CFR 1.116; amendments submitted after allowance are governed by 37 CFR 1.312.

In the event of rejoinder, the requirement for restriction between the product claims and the rejoined process claims will be withdrawn, and the rejoined process claims will be fully examined for patentability in accordance with 37 CFR 1.104. Thus, to be allowable, the rejoined claims must meet all criteria for patentability including the requirements of 35 U.S.C. 101, 102, 103, and 112. Until an elected product claim is found allowable, an otherwise proper restriction requirement between product claims and process claims may be maintained. Withdrawn process claims that are not commensurate in scope with an allowed product claim will not be rejoined. See "Guidance on Treatment of Product and Process Claims in light of *In re Ochiai, In re Brouwer* and 35 U.S.C. § 103(b)," 1184 O.G. 86 (March 26, 1996). Additionally, in order to retain the right to rejoinder in accordance with the above policy, Applicant is advised that the process claims should be amended during prosecution either to maintain dependency on the product claims or to otherwise include the limitations of the product claims. **Failure to do so may result in a loss of the right to rejoinder.**

Further, note that the prohibition against double patenting rejections of 35 U.S.C. 121 does not apply where the restriction requirement is withdrawn by the examiner before the patent issues. See MPEP § 804.01.

Because applicants have already elected and received an examination on the nucleic acid molecules, no election is required and Group I, directed to DNA having SEQ ID No. 1 and DNA encoding SEQ ID No. 14, and the method of using the DNA to prevent infection, will be examined.

DECISION

The petition is **GRANTED-IN-PART**. The restriction requirement between DNA comprising SEQ ID No. 1 and DNA that encodes SEQ ID No. 14 has been withdrawn. Claim 38, directed to a kit comprising DNA, protein or antibody, has been rejoined to the product claims of Groups I, II and III, respectively. The method of claim 37 has been divided in three groups, IV, V and VI, drawn to method of detecting using DNA, protein or antibody, respectively.

The application is being sent back to the examiner for consideration of the amendment and response filed 27 June 2003 and prompt completion of a non-final Office action of the elected invention, Claims 1-19, 25, 36, 38(a), 79 and 80, directed to DNA having SEQ ID No. 1 and encoding SEQ ID No. 14.

Any request for reconsideration of this decision must be made by a renewed petition and must be filed within **TWO MONTHS** of the mailing date of this decision in order to be considered timely.

Since no fee is required for filing this petition, a credit of $130.00 shall be made to Deposit Account No. 19-0741.

Should there be any questions with regard to this letter, please contact Special Program Examiner Julie Burke by letter addressed to the Director, Technology Center 1600, P.O. Box 1450, Alexandria VA, 22313-1450 or by telephone at (703) 308-7553 or by facsimile transmission at (703) 308-7230.

Jasemine C. Chambers

Jasemine Chambers
TC1600 Group Director

UNITED STATES PATENT AND TRADEMARK OFFICE

UNITED STATES DEPARTMENT OF COMMERCE
United States Patent and Trademark Office
Address: COMMISSIONER FOR PATENTS
P.O. Box 1450
Alexandria, Virginia 22313-1450
www.uspto.gov

APPLICATION NO.	FILING DATE	FIRST NAMED INVENTOR	ATTORNEY DOCKET NO.	CONFIRMATION NO.
09/868,987	10/01/2001	Andrew D. Murdin	032931-0253	7970

7590 10/13/2004

Bernhard D Saxe
Foley & Lardner
Suite 500
3000 K Street NW
Washington, DC 20007-5109

EXAMINER
BASKAR, PADMAVATHI

ART UNIT	PAPER NUMBER
1645	

DATE MAILED: 10/13/2004

Please find below and/or attached an Office communication concerning this application or proceeding.

UNITED STATES PATENT AND TRADEMARK OFFICE

Commissioner for Patents
United States Patent and Trademark Office
P.O. Box 1450
Alexandria, VA 22313-1450
www.uspto.gov

BERNHARD SAXE
FOLEY & LARDNER
SUITE 500
3000 K STREET NW
WASHINGTON DC 2007-5109

In re Application of	:	
MURDIN et al	:	Decision on Petition
Serial No. : 09/868,987	:	
Filed : 23 December 1999	:	
Attorney Docket No. : 03293/0253	:	

This letter is in response to the Renewed Petition for Reconsideration of Restriction Requirement filed on 11 March 2004. The delay in acting upon this petition is regretted.

BACKGROUND

This application is filed as 35 USC 371 of the National Stage filing of PCT/CA99/01230, filed 23 December 1999, which claims priority to several provisional applications filed on 12/23/98 and 12/28/98.

On 27 July 2003, applicants have filed a petition to review the restriction requirement set forth by the examiner on 4 October 2002.

The petition was granted in-part on 13 January 2004. In the petition decision, the restriction requirement between DNA comprising SEQ ID NO: 1 and DNA encodes SEQ ID NO: 14 has been withdrawn. Claim 38, directed to a kit comprising DNA, protein or antibody has been rejoined to the product claims of group I, II and III respectively. The method of claim 37 has been divided in three groups IV, V and VI drawn to method of detecting using DNA, protein or antibody, respectively.

The resulting groups are summarized as follows:

Group I, claims 1-19, 25, 36, 38 (a), 79, 80-83, drawn to DNA, vector, host cell, kit and a method of expressing the DNA and a method of preventing infection by administering the DNA.

Group II, claims 20-24, 27-24, 36 and 38 (b), drawn to polypeptide and vaccine, and a method of preventing infection by administering a peptide.

Group III, claims 26, 35, and 38 (c) drawn to an antibody, and a method of preventing infection by administering an antibody.

Group IV, claim 37 (a) drawn to a method of detecting Chlamydia infection using nucleic acid.

Group V, claim 37 (b), drawn to a method of detecting Chlamydia infection using a peptide.

Group VI, claim 37 (c) drawn to a method of detecting Chlamydia infection using an antibody.

Group VII, claim 39, drawn to a method for inducing an immune response using a polypeptide.

On 11 March 2004, applicants filed a renewed petition for reconsideration of Restriction Requirement, a 37 CFR 1.131 Declaration by inventor Andrew Murdin, and amendment to claims 1-4, 7-17, 20-21, 25, 27-28. 33-38, 79-80, and added new claims 81-83.

RELEVANT AUTHORITY

An international or a national stage application are considered to have unity of invention where there exists a "special technical feature" that defines a contribution which each of the claimed inventions, considered as a whole, makes over the prior art. See PCT Rule 13.2; 37 CFR 1.475(a), (b)(1) and(2).

In addition to the categories provided for in 37 CF 1.475(b) (1-5) , unity of invention is explicitly provided for in the following context:

Claim 1: Protein X
Claim 2: DNA sequence encoding protein X.

wherein expression of the DNA sequence in a host results in the production of a protein, which is determined by the DNA sequence. The protein and the DNA sequence exhibit corresponding special technical features. Unity of invention between claims 1 and 2 is accepted.

See MPEP 1893.03(d) and Annex B, Part 2 of the PCT Administration Instructions, Example 17.

Unity of invention has to be considered in the first place only in relation to the independent claims in an international and not the dependent claims and (i) If the independent claims avoid the prior art and satisfy the requirement of unity of invention, no problem of lack of unity arises in respect of any claims that depend on the independent claims;
(ii) If however, an independent claim does not avoid the prior art, then the question whether there is still an inventive link between all the claims dependent on the claim need to be carefully considered. If there is no link remaining an objection of lack of unity a posteriori (that is, arising only after assessment of the prior art) may be raised. See ANNEX B: Unity of Invention Part 1 "Instructions Concerning Unity of Invention" MPEP AI-6 (Rev. 1. Feb. 2003).

DISCUSSION

The petition and application file history have been considered carefully. A summary of the prosecution history can be found in the decision concerning the first petition mailed on 13 January 2004.

The above-identified application is a national stage application submitted under 35 U.S.C. 371 to which "unity of invention", and not U.S. restriction practice is applicable. MPEP section 189.03(d).
The lack of unity between the groups I-VII and the technical feature linking groups I-II is at issue, especially between nucleic acid encoding the peptide of SEQ ID NO: 14 and the peptide of SEQ ID NO: 14 are at issue.

Representative claims of group I:

Amended Claim 1: An isolated nucleic acid molecule comprising a nucleic acid sequence which encodes a) SEQ ID NO: 14; b) an immunogenic fragment comprising at least 50 consecutive amino acids from SEQ ID NO: 14.
Claim 3: An isolated nucleic acid molecule comprising a nucleic acid sequence, which is anti-sense to the nucleic acid molecule of claim 1.

Representative claims of group II:
Amended Claim 21: An isolated polypeptide comprising an amino acid sequence selected from: a) SEQ ID NO: 14; and b) an immunogenic fragment comprising at least 12 consecutive amino acids from SEQ ID NO: 14.

It is noted that the independent claim 1 and 21 above, are drawn to a genus of nucleotides encoding a genus of polypeptides and not a single species of polypeptide and the genus of polynucleotides that encode it as in Example 17.

The polynucleotide of group I does not share a common structure or function or property with the polypeptide of group II. Further neither the nucleic acid molecule comprising a nucleic acid sequence which is anti-sense to the nucleic acid molecule of claim 1, nor the nucleic acid sequence which encodes an immunogenic fragment comprising at least 50 consecutive amino acids from SEQ ID NO: 14 are required to or could possibly encode the polypeptide comprising amino acid sequence of SEQ ID NO: 14, such that according to the PCT Administrative Instructions, Example 17 the inventions exhibit no corresponding special technical feature.

According to the PCT Rule 13.2, the special technical feature shall mean those technical features that define contribution which each of the claimed inventions, considered as whole makes over the prior art.

The technical feature of group I is considered as polynucleotide.
The technical feature of group II is considered as polypeptide.
The polynucleotide is made of nucleic acids, and the polypeptide is made of amino acids.
Thus, the polynucleotides of group I, and the polypeptides of group II are not linked by the same or corresponding technical feature as defined by PCT Rule 13.2.

In the present instance neither the polynucleotide of group I and nor the polypeptides of group II exhibit a corresponding special technical feature since Hillier et al (Genome Research. Vol 6, no. 9, pages 807-828. 1996) teaches the nucleic acid sequence, which is 100 % complementary (i.e., antisense) to the nucleotides 370-388 of SEQ ID NO: 1 of the instant claims, which is within the scope of the presently claimed invention. It is noted since claim 3 recites 'an isolated nucleic acid molecule comprising a nucleic acid sequence, which is anti-sense to the nucleic acid molecule of claim 1', and the specification disclosure does not define the antisense sequence length that corresponds to the nucleic acid sequence of claim 1, the reference sequence would anticipate the claimed nucleic acid molecule. See the attached sequence alignment.

Thus, the nucleic acid molecule of group I do not share a special technical feature with the polypeptides of group II.

The technical feature of group I, the nucleic acid molecule of claim 1, is not present in the groups II-III, and groups V-VII.
Because Hillier et al teach the nucleic acid of claim 3 (group I), the technical feature of linking groups I-VII does not constitute a special technical feature as defined by PCT Rule 13.2, as it does not define a contribution over the prior art and hence the unity of invention is lacking.

Upon reconsideration, the Finality of the office action, mailed on 28 June 2004 has been withdrawn as being premature. The application will be forwarded to the examiner for preparation of an action consistent to this petition decision.

DECISION

Applicant's renewed petition for reconsideration of Restriction requirement between groups I-VII under 37 CFR 1.144 is **DENIED** for the reasons set forth above.

Any request for consideration must be filed within two (2) months of the mailing date of this decision.

It is noted that the renewed petition for reconsideration of restriction requirement (filed on 11 March 2004) is signed by attorney Thuy H. Nguyen of address Smart & Biggar of Canada. However, no revocation of power of attorney has been found in this application. Thus the petition decision will be addressed to the Attorney of record with a copy to be mailed to Attorney Nguyen.

Should there be any questions regarding this decision, please contact Special Program Examiner Julie Burke, by mail addressed to Director, Technology Center 1600, PO BOX 1450, ALEXANDRIA, VA 22313-1450, or by telephone at (571) 272-1600 or by Official Fax at 703-872-9306.

Jasemine C. Chambers

Jasemine Chambers
Director, Technology Center 1600.

ADDRESS:

THUY H. NGUYEN
SMART & BIGGAR
900-55 METCALFE STREET
OTTAWA, ONTARIO
CANADA, KIP 5Y6

UNITED STATES PATENT AND TRADEMARK OFFICE

Commissioner for Patents
United States Patent and Trademark Office
P.O. Box 1450
Alexandria, VA 22313-1450
www.uspto.gov

FOLEY & LARDNER LLP
SUITE 500
3000 K STREET NW
WASHINGTON, DC 20007

COPY MAILED

MAY 18 2007

OFFICE OF PETITIONS

In re Application of Andrew D. Murdin, et al Application No. 09/868,987 Filed: October 1, 2001 Attorney Docket No. 77813-73/slr	DECISION ON PETITION TO WITHDRAW FROM RECORD

This is a decision on the Request to Withdraw as attorney or agent of record under 37 C.F.R. § 1.36(b), filed March 30, 2007.

The request is **DISMISSED** as moot.

A review of the file record indicates that the power of attorney given to, Foley & Lardner, LLP has been revoked by the assignee of the patent application on March 20, 2007. Accordingly, the request to withdraw under 37 C.F.R. § 1.36(b) is moot.

All future correspondence from the Office will continue to be directed to the below-listed address unless otherwise notified by applicant.

There are no pending Office actions at the present time.

Telephone inquires concerning this decision should be directed to Diane Goodwyn at 571-272-6735.

April Wise
Petitions Examiner
Office of Petitions

cc: SMART & BIGGAR
55 METCALFE STREET,
SUITE 900
OTTAWA, CANADA
K1P 5Y6

UNITED STATES PATENT AND TRADEMARK OFFICE

Commissioner for Patents
United States Patent and Trademark Office
P.O. Box 1450
Alexandria, VA 22313-1450
www.uspto.gov

Philip S Johnson
Johnson & Johnson
One Johnson & Johnson Plaza
New Brunswick NJ 08933-7003

COPY MAILED
SEP 19 2006
OFFICE OF PETITIONS

In re Application of	:	
John Paul McGee, et. al.	:	
Application No. 09/868,991	:	DECISION ON PETITION
Filed: July 26, 2001	:	UNDER 37 CFR 1.55(c)
Attorney Docket No. JANS-0008	:	

This is a decision on the petition under 37 CFR 1.55(c), filed April 13, 2006, to accept an unintentionally delayed claim under 35 U.S.C. § 119(a)-(d) for the benefit of priority to foreign European Application No. EP 98204447.1, filed December 24, 1998.

The petition is **DISMISSED AS MOOT**.

A review of the record shows that the reference to the prior-filed foreign application was included in the oath or declaration filed on July 26, 2001. However, the Office mistakenly noted the incorrect claim for priority to the foreign application. Therefore, the correct claim for priority to foreign European Application No. EP 98204447.1, filed December 24, 1998 has been inserted into the Office records, as shown by its inclusion on the filing receipt.

In view of the above, the $1,370 petition fee submitted is unnecessary and will be refunded to petitioner's deposit account in due course.

The Office acknowledges receipt of Priority papers filed on June 21, 2001.

A corrected Filing Receipt, which includes the correct foreign application number, accompanies this decision on petition.

This application is being referred to the Office of Publications.

Any questions concerning this decision on petition may be directed to Andrea Smith at (571) 272-3226. All other inquiries concerning the issuance of the application should be directed to the Office of Publications at (571) 272-4200.

Frances Hicks
Petitions Examiner
Office of Petitions

ATTACHMENT: Corrected Filing Receipt

UNITED STATES PATENT AND TRADEMARK OFFICE

UNITED STATES DEPARTMENT OF COMMERCE
United States Patent and Trademark Office
Address: COMMISSIONER FOR PATENTS
P.O. Box 1450
Alexandria, Virginia 22313-1450
www.uspto.gov

APPL NO.	FILING OR 371 (c) DATE	ART UNIT	FIL FEE REC'D	ATTY.DOCKET NO	DRAWINGS	TOT CLMS	IND CLMS
09/868,991	07/26/2001	1618	2846	JANS-0008		29	1

CONFIRMATION NO. 7988

CORRECTED FILING RECEIPT

OC000000020401630

Philip S Johnson
Johnson & Johnson
One Johnson & Johnson Plaza
New Brunswick, NJ 08933-7003

Date Mailed: 09/13/2006

Receipt is acknowledged of this regular Patent Application. It will be considered in its order and you will be notified as to the results of the examination. Be sure to provide the U.S. APPLICATION NUMBER, FILING DATE, NAME OF APPLICANT, and TITLE OF INVENTION when inquiring about this application. Fees transmitted by check or draft are subject to collection. Please verify the accuracy of the data presented on this receipt. **If an error is noted on this Filing Receipt, please mail to the Commissioner for Patents P.O. Box 1450 Alexandria Va 22313-1450. Please provide a copy of this Filing Receipt with the changes noted thereon. If you received a "Notice to File Missing Parts" for this application, please submit any corrections to this Filing Receipt with your reply to the Notice. When the USPTO processes the reply to the Notice, the USPTO will generate another Filing Receipt incorporating the requested corrections (if appropriate).**

Applicant(s)

John Paul McGee, Antwerpen, BELGIUM;
Paul Marie Victor Gilis, Beerse, BELGIUM;
Marc Maurice Germain De Weer, Vosselaar, BELGIUM;
Valentin Florent Victor de Conde, Lommel, BELGIUM;
Herman Johannes Catherina de Bruijn, Meer, BELGIUM;
Frederic Anne Rodolf Van Dycke, Antwerpen, BELGIUM;

Power of Attorney:

Robert Washburn--16574
Richard Kurtz--19263
Anthony Rossi--24053
Norman Norris--24196
Terence Strobaugh--25460
Dale Heist--28425
Dianne Elderkin--28598
Gary Levin--28734
John Caldwell--28937
John Donohue Jr--29916

Domestic Priority data as claimed by applicant

This application is a 371 of PCT/EP99/10257 12/20/1999

Foreign Applications

EUROPEAN PATENT OFFICE (EPO) 98204447.1 12/24/1998
If Required, Foreign Filing License Granted: 09/12/2006

The country code and number of your priority application, to be used for filing abroad under the Paris Convention, is US09/868,991

Projected Publication Date: None, application is not eligible for pre-grant publication

Non-Publication Request: No

Early Publication Request: No

Title

CONTROLLED RELEASE GALANTAMINE COMPOSITION

Preliminary Class

424

PROTECTING YOUR INVENTION OUTSIDE THE UNITED STATES

Since the rights granted by a U.S. patent extend only throughout the territory of the United States and have no effect in a foreign country, an inventor who wishes patent protection in another country must apply for a patent in a specific country or in regional patent offices. Applicants may wish to consider the filing of an international application under the Patent Cooperation Treaty (PCT). An international (PCT) application generally has the same effect as a regular national patent application in each PCT-member country. The PCT process **simplifies** the filing of patent applications on the same invention in member countries, but **does not result** in a grant of "an international patent" and does not eliminate the need of applicants to file additional documents and fees in countries where patent protection is desired.

Almost every country has its own patent law, and a person desiring a patent in a particular country must make an application for patent in that country in accordance with its particular laws. Since the laws of many countries differ in various respects from the patent law of the United States, applicants are advised to seek guidance from specific foreign countries to ensure that patent rights are not lost prematurely.

Applicants also are advised that in the case of inventions made in the United States, the Director of the USPTO must issue a license before applicants can apply for a patent in a foreign country. The filing of a U.S. patent application serves as a request for a foreign filing license. The application's filing receipt contains further information and guidance as to the status of applicant's license for foreign filing.

Applicants may wish to consult the USPTO booklet, "General Information Concerning Patents" (specifically, the section entitled "Treaties and Foreign Patents") for more information on timeframes and deadlines for filing foreign patent applications. The guide is available either by contacting the USPTO Contact Center at 800-786-9199, or it can be viewed on the USPTO website at http://www.uspto.gov/web/offices/pac/doc/general/index.html.

For information on preventing theft of your intellectual property (patents, trademarks and copyrights), you may wish to consult the U.S. Government website, http://www.stopfakes.gov. Part of a Department of Commerce initiative, this website includes self-help "toolkits" giving innovators guidance on how to protect intellectual property in specific countries such as China, Korea and Mexico. For questions regarding patent enforcement issues, applicants may call the U.S. Government hotline at 1-866-999-HALT (1-866-999-4158).

LICENSE FOR FOREIGN FILING UNDER
Title 35, United States Code, Section 184
Title 37, Code of Federal Regulations, 5.11 & 5.15

GRANTED

The applicant has been granted a license under 35 U.S.C. 184, if the phrase "IF REQUIRED, FOREIGN FILING LICENSE GRANTED" followed by a date appears on this form. Such licenses are issued in all applications where

the conditions for issuance of a license have been met, regardless of whether or not a license may be required as set forth in 37 CFR 5.15. The scope and limitations of this license are set forth in 37 CFR 5.15(a) unless an earlier license has been issued under 37 CFR 5.15(b). The license is subject to revocation upon written notification. The date indicated is the effective date of the license, unless an earlier license of similar scope has been granted under 37 CFR 5.13 or 5.14.

This license is to be retained by the licensee and may be used at any time on or after the effective date thereof unless it is revoked. This license is automatically transferred to any related applications(s) filed under 37 CFR 1.53(d). This license is not retroactive.

The grant of a license does not in any way lessen the responsibility of a licensee for the security of the subject matter as imposed by any Government contract or the provisions of existing laws relating to espionage and the national security or the export of technical data. Licensees should apprise themselves of current regulations especially with respect to certain countries, of other agencies, particularly the Office of Defense Trade Controls, Department of State (with respect to Arms, Munitions and Implements of War (22 CFR 121-128)); the Bureau of Industry and Security, Department of Commerce (15 CFR parts 730-774); the Office of Foreign Assets Control, Department of Treasury (31 CFR Parts 500+) and the Department of Energy.

NOT GRANTED

No license under 35 U.S.C. 184 has been granted at this time, if the phrase "IF REQUIRED, FOREIGN FILING LICENSE GRANTED" DOES NOT appear on this form. Applicant may still petition for a license under 37 CFR 5.12, if a license is desired before the expiration of 6 months from the filing date of the application. If 6 months has lapsed from the filing date of this application and the licensee has not received any indication of a secrecy order under 35 U.S.C. 181, the licensee may foreign file the application pursuant to 37 CFR 5.15(b).

UNITED STATES PATENT AND TRADEMARK OFFICE
23 OCT 2002

COMMISSIONER FOR PATENTS
UNITED STATES PATENT AND TRADEMARK OFFICE
WASHINGTON, D.C. 20231
www.uspto.gov

Mr. Robert Kestenbaum
11011 Bermuda Dunes NE
Albuquerque, NM 87111

In re Application of	:	
Blaschke et al.	:	
Application No.: 09/868,996	:	DECISION
PCT No.: PCT/EP99/09950	:	
Int. Filing Date: 15 December 1999	:	ON
Priority Date: 22 December 1998	:	
Attorney Docket No.: (E) 1689 PCT	:	PETITION
For: Fuel Dosing Pump Of A Heating Device,	:	
Especially An Automobile Water Or Air	:	
Heating Device With A Control Device	:	

This is in response to applicant's "Petition To Withdraw Holding Of Abandonment" filed on 24 June 2002.

BACKGROUND

This international application was filed on 15 December 1999 and claimed an earliest priority date of 22 December 1998. The International Bureau transmitted a copy of the published international application to the USPTO on 29 June 2000. A Demand electing the United States was filed prior to the elapse of 19 months from the priority date. Consequently, the 30 month period for payment of the basic national fee in the United States expired as of midnight on 22 June 2001.

On 20 June 2001, applicant filed, *inter alia*, the basic national fee.

On 20 July 2001, a Notification Of Missing Requirements (Form PCT/DO/EO/905) was mailed to applicants, requiring the filing of an English translation of the international application, an executed oath or declaration of the inventors in compliance with 37 CFR 1.497 (a) and (b), a surcharge under 37 CFR 1.492(e), and a processing fee under 37 CFR 1.492(f). The Notification Of Missing Requirements was accompanied by a Notice of Defective Translation (Form PCT/DO/EO/913) indicating that the text in the drawings had not been properly translated, and by a Notification Of A Defective Oath or Declaration (Form PCT/DO/EO/917) indicating that the declaration had not been executed.

On 31 May 2002, a Notice of Abandonment Under 37 CFR 1.53 (f) or (g) was mailed to applicant, indicating that this application "is abandoned for failure to timely or properly reply to the Notice To File Missing Parts (Notice) mailed on 07/20/2001. No reply was received."

On 24 June 2002, applicant filed the instant petition.

DISCUSSION

The petition is accompanied *inter alia* by copies of a Transmittal Letter (including fee calculation sheet and fee authorization), a signed declaration, a letter regarding the translation, a copy of page 16 of the translation, a certificate of mailing under 37 CFR 1.8, and a copy of a return postcard receipt stamped as received by the USPTO on "09 JAN 2002" and itemizing *inter alia* a declaration and a "response to Notice of Defective Translation." MPEP 503 states in part that "A postcard receipt which itemizes and properly identifies the papers which are being filed serves as *prima facie* evidence of receipt in the PTO of all the items listed thereon on the date stamped thereon by the PTO." Thus, the postcard stamped as received on 09 January 2002 constitutes *prima facie* evidence of receipt of the enumerated items on that date. Accordingly, the copies of, *inter alia,* the certificate of mailing under 37 CFR 1.8, the declaration and the "response to Notice of Defective Translation" filed on 24 June 2002 will be accepted as copies of the papers as filed on 09 January 2002.

The certificate of mailing was dated October 22, 2001. The Notification of Missing Requirements mailed on 20 July 2001 set a two-month period for reply. Thus, since 22 October 2001 was a Monday, a one-month extension of time is necessary in order for the correspondence to be considered timely. The statement in the transmittal letter filed on 20 July 2001 to charge any necessary fees is treated under 37 CFR 1.136(a)(3) as a constructive petition for the extension of time. The fee has been charged to counsel's deposit account. Accordingly, the response is treated as timely and the Notification of Abandonment dated 31 May 2002 is hereby **VACATED**.

DECISION

The petition is **GRANTED**.

This application is being forwarded to the National Stage Processing Branch for further processing. The date of this application under 35 U.S.C 371 is **09 January 2002**.

Leonard Smith
PCT Legal Examiner
PCT Legal Office

George Dombroske
PCT Legal Examiner
PCT Legal Office
Tel: (703) 308-6721
Fax: (703) 308-6459

27 APR 2004

UNITED STATES PATENT AND TRADEMARK OFFICE

COMMISSIONER FOR PATENTS
UNITED STATES PATENT AND TRADEMARK OFFICE
P.O. BOX 1450
ALEXANDRIA, VA 22313-1450
www.uspto.gov

Laura A. Donnelly
Senior Patent Counsel
Johnson & Johnson
One Johnson & Johnson Plaza
New Brunswick, N.J. 08933

In re Application of	:	
Stefan Leo Jozef MASURE et al.	:	
Application No.: 09/869,079	:	
PCT Application No.: PCT/GB99/04311	:	DECISION ON
International Filing Date: 17 December 1999	:	
Priority Date: 22 December 1998	:	PETITION
Attorney Docket No.: JAB-1458	:	
For: HUMAN AKT-3	:	UNDER 37 CFR 1.137(b)

Applicant's "Petition for Revival of an International Application for Patent Designating the U.S. Abandoned Unintentionally Under 37 CFR 1.137(b)," filed in the United States Patent and Trademark Office (USPTO) on 05 January 2004 is **DISMISSED**.

BACKGROUND

On 05 December 2001, the USPTO, in the capacity as Designated/Elected Office, mailed out a DO/EO/905 Form ("Notification of Missing Requirements Under 35 U.S.C. 371") for this application. The DO/EO/905 Form stated that the biochemical "Sequence Listing" did not comply with the requirements of 37 CFR 1.822 and/or 1.832. The Form further stated that applicants were required to provide a substitute paper copy of the "Sequence Listing" and an amendment directing its entry into the specification.

On 15 April 2002, Applicant timely (with a three-month extension of time) filed a Response to the DO/EO/905 Form. The Response included a substitute "Sequence Listing" in paper and computer-readable form and an amendment directing entry of the substitute paper "Sequence Listing" into the specification.

On 11 June 2002, the USPTO mailed out a DO/EO/903 Form ("Notice of Acceptance of Application under 35 U.S.C. 371"). However, on 05 December 2002, the USPTO mailed out a communication stating that the DO/EO/903 Form was sent in error and had been withdrawn. The communication was accompanied by a DO/EO/916 Form ("Notification of Defective Response"). The DO/EO/916 Form stated a problem with the "Sequence Listing" and further stated that applicant must provide a substitute copy of the sequence listing and an amendment directing its entry into the specification. The Form set a non-extendable one month period for reply. Therefore applicant was required to send a proper reply that was received by 05 January 2003 in

order to prevent the application from being abandoned.

On 04 December 2003, the USPTO mailed out a DO/EO/909 Form ("Notice of Abandonment"). The DO/EO/909 Form stated that the application is abandoned as to the United States of America because applicant failed to respond to the 05 December 2002 Notification of Defective Response.

On 05 January 2004, the USPTO received a faxed communication from applicant. The unsigned cover page of the faxed communication states that the papers the follow are copies of papers that were deposited with the U.S. Post Office on September 30, 2003. The cover page further states that a copy of a date stamped postcard, dated October 3, 2003, accompanies the papers. In addition, the cover page states, "Not included is a computer copy of the Sequence Listing for obvious reasons." The papers that follow the cover page include, *inter alia*, the petition to revive and a "Response to the Notice of Defective Response" that includes an amendment and a substitute paper copy of the "Sequence Listing." A copy of a postcard receipt inventorying these items is included. However, the copy of the postcard receipt does not bear an official USPTO date stamp.

DISCUSSION

The petition under 37 CFR 1.137(b) faxed to the USPTO on 05 January 2004 will be treated as having been filed for the first time on that date. It will not be treated as having first been filed on 03 October 2003. The cover page of the faxed communication, which appears to request relief under 37 CFR 1.181for an earlier filing date based upon postcard evidence, is not signed by a registered practitioner, and threfore that paper cannto be treated on the merits. *See* 37 CFR 1.33. In addition, it is noted that the copy of the postcard receipt that is included in the faxed transmission does not bear an official USPTO date stamp. Therefore, it cannot serve as *prima facie* evidence of the date of original submission of the papers. *See* MPEP § 503.

A petition to revive an abandoned application under 37 CFR 1.137(b) must be filed without intentional delay from the time the application became abandoned and/or applicant first became aware of the abandoned status of the application. A petition under 37 CFR 1.137(b) must be accompanied by (1) a statement that the entire delay in filing the required reply from the due date for the reply until the filing of a grantable petition was unintentional, (2) a proper reply, (3) the petition fee required by law (37 CFR 1.17(m)), and (4) a terminal disclaimer and fee (if the international application was filed prior to 08 June 1995). A proper reply in this case requires a reply that is fully responsive to the 05 December 2002 Notification of Defective Response.

Applicant has met the first and fourth requirements of 37 CFR 1.137(b). Applicant has stated, "The entire delay in filing the required reply from the due date for the required reply until the filing of a grantable petition under 37 CFR 1.137(b) was unintentional." A terminal disclaimer is not required because the application was filed on or after 08 June 1995.

With respect to the petition fee, the petition to revive includes an authorization to deduct $110.00 dollars from the deposit account of Applicant's representative. This amount is not sufficient. The petition fee set forth in 37 CFR 1.17(m) for an entity that does not or cannot claim small entity status is $1,330.00. However, the petition also includes authorization to deduct the deposit account for any additional fee. Therefore, the deposit account has been charged an additional $1220.00. Accordingly, the applicant has met the third requirement of 37 CFR 1.137(b).

However, the petition cannot be granted because applicant fails to meet the second requirement of 37 CFR 1.137(b). The first reason why the reply is deficient is that it does not include a computer-readable copy of the latest substitute Sequence Listing. 37 CFR 1.825(b) states, "Any amendment to the paper copy of the "Sequence Listing," in accordance with paragraph (a) of this section, must be accompanied by a substitute copy of the computer readable form (§ 1.821(e)) . . . ." The cover page of the faxed communication explicitly states that a computer-readable copy is not being submitted "for obvious reasons." There is no record that a computer-readable copy was submitted on 03 October 2003 and Applicant has not presented *prima facie* evidence that a copy was filed on that date. Even if such evidence was submitted, a replacement computer-readable copy is still required for processing purposes.

The reply is further deficient because it does not address all of the problems identified on the 05 December 2002 Notification of Defective Response and the attachments that were sent along with the Notification. In particular the Comment Sheet from Technology Center 1600 that was attached to the Notification indicates that there are nucleotide sequences in lines 6-8 *and* lines 12-14 on page 25 of the specification that are not included in the Sequence Listing. The amendment submitted on 05 January 2004 includes a replacement paragraph for the paragraph that begins on line 2 of page 25. This replacement paragraph provides "SEQ ID Nos." for the sequences that are in lines 6-8 of page 25 (lines 4-6 of the replacement paragraph, where the paragraph heading is line 1), but does not provide "SEQ ID Nos." for the two sequences that are listed in lines 12-14 of page 25 (lines 8-10 of the replacement paragraph). The "Remarks" section of the amendment does not provide a reason why these two sequences are not added to the Sequence Listing. Because both of these sequences are longer than ten nucleotides, applicant must include them in the Sequence Listing. *See* 37 CFR 1.821(a) & 1.821(c). Similarly, applicant must also include in the Sequence Listing the amino acid sequence in line 36 on page 20 of the current specification. This sequence is also listed on the aforementioned Comment Sheet. The replacement paragraph in the 05 January 2004 amendment for the paragraph beginning on line 16 of page 19 does not provide a "SEQ ID No." for this sequence.

CONCLUSION

The petition under 37 CFR 1.137(b) to revive the application abandoned as to the National Stage in the United States of America is **DISMISSED**.

Applicant may file a request for reconsideration of this decision within a time period of **TWO (2) MONTHS** from the mailing date of this decision. *See* 37 C.F.R. 1.137(e). Any request for reconsideration should include a cover letter entitled "Renewed Petition Under 37 C.F.R. 1.137(b)." No additional petition fee is required for reconsideration. This time period may be extended under 37 C.F.R. 1.136(a). A request for reconsideration should be mailed to:

Mail Stop PCT
Commissioner for Patents
P.O. Box 1450
Alexandria, VA 223130-1450

The contents of the letter should be marked to the attention of the Office of PCT Legal administration.

Boris Milef
PCT Legal Examiner
PCT Legal Administration

Ankur Parekh
Detailee
PCT Legal Administration

Telephone: (703) 308-1315
Facsimile: (703) 308-6459

02 NOV 2004

#16

UNITED STATES PATENT AND TRADEMARK OFFICE

COMMISSIONER FOR PATENTS
UNITED STATES PATENT AND TRADEMARK OFFICE
P.O. BOX 1450
ALEXANDRIA, VA 22313-1450
www.uspto.gov

Laura A. Donnelly
Johnson & Johnson
One Johnson & Johnson Plaza
New Brunswick, NJ 08933-7003

In re Application of	:
MASURE, Stefan Leo Jozef et al	: DECISION ON
PCT Application No.: PCT/GB99/04311	:
Int. Filing Date: 17 December 1999	: PETITION UNDER
Priority Date: 22 December 1998	:
Attorney's File Reference: JAB-1458	: 37 CFR 1.137(b)
For: HUMAN AKT-3	:

This decision is in response to applicants' "REQUEST FOR RECONSIDERATION OF DECISION ON PETITION UNDER 37 CFR 1.137(b)", filed 30 June 2004. Applicants' petition to revive the above-identified application under 37 CFR 1.137(b) is **GRANTED**.

BACKGROUND

On 27 April 2004, this Office mailed a decision dismissing applicants' petition under 37 CFR 1.137(b). The decision stated that applicants' petition could not be granted because the applicants had not provided 1) "SEQ ID Nos." for the two sequences listed in lines 12-14 of page 25 of the specification and the sequence in line 36 of page 20 of the specification, and 2) a computer readable copy of the latest substitute sequence listing.

On 30 June 2004, applicants filed the present "Request for Reconsideration of Decision of Petition Under 37 CFR 1.138(b)" which is accompanied by an amendment to the specification as well as both a paper and computer readable copy of a corrected sequence listing.

DISCUSSION

Initially, it is noted that applicant's 03 October 2003 submission has now been matched with the file of the above-captioned application. A review of the application file reveals that the amendments to the specification and sequence listing filed 30 June 2004 appear to bring the application into compliance with 37 CFR 1.821-1.825. Accordingly, it is appropriate to grant applicants' petition to revive the above-identified application under 37 CFR 1.137(b). The granting of this petition does not foreclose the examiner from requiring correction of any error or inconsistency with the sequence rules detected during examination.

CONCLUSION

For the above reasons, applicants' petition under 37 CFR 1.137(b) to revive the above-identified application abandoned under 37 CFR 1.821(g) is **GRANTED**.

This application is being forwarded to the United States Designated/Elected Office for further processing. The 35 USC 371(c)(1), (c)(2), and (c)(4) date is **20 June 2001**.

Diana Oleksa
Special Programs Examiner
PCT Special Programs Office
Telephone: 703-308-0890

Boris Milef
PCT Legal Examiner
PCT Legal Office

UNITED STATES PATENT AND TRADEMARK OFFICE

Commissioner for Patents
United States Patent and Trademark Office
P.O. Box 1450
Alexandria, VA 22313-1450
www.uspto.gov

ANDREW L. NEY
RATNEW & PRESTIA
ONE WESTLAKES BERWYN, SUITE 301
P. O. BOX 980
VALLEY FORGE, PA 19482-0980

COPY MAILED

JUN 07 2007

OFFICE OF PETITIONS

In re Application of	:
Tetsuya Itani	:
Application No. 09/869,096	: DECISION GRANTING PETITION
Filed: August 22, 2001	: UNDER 37 CFR 1.313(c)(2)
Attorney Docket No. YAO-4343US	:

This is a decision on the petition, filed June 6, 2007, under 37 CFR 1.313(c)(2) to withdraw the above-identified application from issue after payment of the issue fee.

The petition is **GRANTED**.

The above-identified application is withdrawn from issue for consideration of a submission under 37 CFR 1.114 (request for continued examination). See 37 CFR 1.313(c)(2).

Petitioner is advised that the issue fee paid on May 22, 2007 in the above-identified application cannot be refunded. If, however, the above-identified application is again allowed, petitioner may request that it be applied towards the issue fee required by the new Notice of Allowance.[1]

Telephone inquiries should be directed to the undersigned at (571) 272-3218.

This matter is being referred to Technology Center AU 2621 for processing of the request for continued examination under 37 CFR 1.114 and for consideration of an Information Disclosure Statement.

Frances Hicks
Petitions Examiner
Office of Petitions

C:\Documents and Settings\fhicks\My Documents\470\june10\869096.wpd

---

[1] *The request to apply the issue fee to the new Notice may be satisfied by completing and returning the new Part B – Fee(s) Transmittal Form (along with any balance due at the time of submission). Petitioner is advised that the Issue Fee Transmittal Form **must** be completed and timely submitted to avoid abandonment.*

MAY 3 0 2002

UNITED STATES PATENT AND TRADEMARK OFFICE

COMMISSIONER FOR PATENTS
UNITED STATES PATENT AND TRADEMARK OFFICE
WASHINGTON, DC 2023
www.uspto.gov

Janis K. Fraser, Ph.D., J.D.
Fish & Richardson P.C.
225 Franklin Street
Boston, MA 02110-2804

In re Application of Yamasaki et al. Application No.: 09/869,101 PCT No.: PCT/JP99/07222 Int. Filing Date: 22 December 1999 Priority Date: 24 December 1998 Attorney's Docket No.:06501-082001 For: BENZIMIDAZOLE DERIVATIVES	DECISION ON REQUEST UNDER 37 CFR 1.42

This is a decision on the papers filed 06 December 2001 which are being treated as a request under 37 CFR 1.42.

BACKGROUND

On 22 December 1999, applicants filed international application PCT/JP99/07222, which claimed priority of an earlier Japanese application filed 24 December 1998. A copy of the international application was communicated to the United States Patent and Trademark Office from the International Bureau on 06 July 2000. A Demand for international preliminary examination, in which the United States was elected, was filed on 09 June 2000, prior to the expiration of nineteen months from the priority date. Accordingly, the thirty-month period for paying the basic national fee in the United States expired at midnight on 24 June 2001.

On 22 June 2001, applicants filed a transmittal letter for entry into the national stage in the United States which was accompanied by, *inter alia*, the requisite basic national fee as required by 35 U.S.C. 371(c)(1) and a preliminary amendment.

On 06 S[illegible]

[illegible] SIGNATED ELECTED OFFICE (DO/EO/US) [illegible] PCT DO/EO [illegible] indicating that applicant was required to file an oath declaration and a surcharge fee

On 06 December 2001, applicants filed the current response which included an executed declaration for inventors Yamasaki, Imoto, Hiramura, Kawauchi, Kayakiri, Sawada, Abe, Hamashima, Ishibashi and Setoi. Applicants also included a second declaration executed by Noriko Uku, Chikako Oku and Tomohito Oku as representatives of Teruo Oku.

On 26 February 2001, applicants filed the current response indicating that the Declaration submitted on January 12, 2001 does comply with 37 CFR 1.63 since an Initial Application Data Sheet was also submitted.

DISCUSSION

Applicant's declarations are being treated as a request under 37 CFR 1.42.

With respect to applicants' declarations in the current application, 37 CFR 1.42 states, in part:

> In case of the death of the inventor, the legal representative (executor, administrator, etc.) of the deceased inventor may make the necessary oath or declaration, and apply for and obtain the patent.

37 CFR 1.497 states, in part:

> (a) When an applicant of an international application desires to enter the national stage under 35U.S.C. 371 pursuant to 1.494 or 1.495, he or she must file an oath or declaration that:
> (1) Is executed in accordance with either 1.66 or 1.68;
> (2) Identifies the specification to which it is directed;
> (3) Identifies each inventor and the country of citizenship of each inventor; and
> (4) States that the person making the oath or declaration believes the named inventor or inventors to be the original and first inventor or inventors of the subject matter which is claimed and for which a patent is sought.
> (b) (1) The oath or declaration must be made by all of the actual inventors except as provided for in 1.42, 1.43 or 1.47.
> (2) If the person making the oath or declaration is not the
>
> [illegible] which the inventor would have been required to state. If the person signing the oath or declaration is the legal

representative of a deceased inventor, the oath or declaration shall also state that the person is a legal representative and the citizenship, residence and mailing address of the legal representative.

The declarations filed 06 December 2001 fail to properly identify the citizenship, residence and mailing address of both the legal representatives and the deceased inventor. Accordingly, the declaration is not acceptable under 37 CFR 1.497.

CONCLUSION

Applicants' request under 37 CFR 1.42 is **DISMISSED** without prejudice.

If reconsideration of this decision is desired, a proper response, i.e., a declaration in compliance with 37 CFR 1.497(a)-(b), must be filed within **TWO (2) MONTHS** from the mail date of this decision. Any reconsideration request should include a cover letter entitled "Renewed Request Under 37 CFR 1.42". Extensions of time may be obtained under 37 CFR 1.136(a). **FAILURE TO RESPOND WITH RESULT IN ABANDONMENT OF THE APPLICATION.**

Please direct further correspondence with respect to this matter to the Assistant Commissioner for Patents, Box PCT, Washington, D.C. 20231, and address the contents of the letter to the attention of the PCT Legal Office.

Debra S. Brittingham
PCT Special Programs Examiner
PCT Legal Office

Leonard Smith
PCT Legal Examiner
PCT Legal Office

DSB/LS:dsb
Telephone: (703) 308-3401
Facsimile: (703) 308-6459

04 FEB 2003

UNITED STATES PATENT AND TRADEMARK OFFICE

COMMISSIONER FOR PATENTS
UNITED STATES PATENT AND TRADEMARK OFFICE
WASHINGTON, DC 2023
www.uspto.gov

Shailaja M. Shirodkar
Fish & Richardson P.C.
225 Franklin Street
Boston, MA 02110-2804

In re Application of	:	
Yamasaki et al.	:	DECISION ON
Application No.: 09/869,101	:	
PCT No.: PCT/JP99/07222	:	REQUEST UNDER
Int. Filing Date: 22 December 1999	:	
Priority Date: 24 December 1998	:	37 CFR 1.42
Attorney's Docket No.:06501-082001	:	
For: BENZIMIDAZOLE DERIVATIVES	:	

This is a decision on the Renewed Request under 37 CFR 1.42 which was filed 29 August 2002.

BACKGROUND

On 22 December 1999, applicants filed international application PCT/JP99/07222, which claimed priority of an earlier Japanese application filed 24 December 1998. A copy of the international application was communicated to the United States Patent and Trademark Office from the International Bureau on 06 July 2000. A Demand for international preliminary examination, in which the United States was elected, was filed on 09 June 2000, prior to the expiration of nineteen months from the priority date. Accordingly, the thirty-month period for paying the basic national fee in the United States expired at midnight on 24 June 2001.

On 22 June 2001, applicants filed a transmittal letter for entry into the national stage in the United States which was accompanied by, *inter alia*, the requisite basic national fee as required by 35 U.S.C. 371(c)(1) and a preliminary amendment.

On 06 September 2001, the United States Patent and Trademark Office in its capacity as an Elected Office mailed the "NOTIFICATION OF MISSING REQUIREMENTS UNDER 35 U.S.C. 371 IN THE UNITED STATES DESIGNATED/ELECTED OFFICE (DO/EO/US)" [illegible] PCT (DO/EO/905) [illegible]

On 06 December 2001, applicants filed an executed declaration for inventors Yamasaki, Imoto, Hiramura, Kawauchi, Kayakiri, Sawada, Abe, Hamashima, Ishibashi and Setoi. Applicants also included a second declaration executed by Noriko Uku, Chikako Oku and Tomohito Oku as representatives of Teruo Oku.

On 30 May 2002, applicants' request under 37 CFR 1.42 was dismissed for failure to properly identify the citizenship, residence and mailing address of both the legal representatives and the deceased inventor.

On 29 August 2002, applicants submitted the current response which included a declaration that indicates the citizenship, residence and mailing address of both the legal representatives and the deceased inventor. Applicant also submitted a request for a one-month extension of time along with the proper fee.

DISCUSSION

Applicants submitted a declaration that indicates the citizenship, residence and mailing address of both the legal representatives and the deceased inventor. Further, applicants previously submitted declarations signed by both the applicants and the legal representatives of the deceased applicant. Accordingly, the declarations are now acceptable under 37 CFR 1.497.

It is noted that on 17 January 2003, applicants submitted a communication that indicates that inventor Yamasaki's name was misspelled on the WIPO publication. This error has been corrected on the declaration.

CONCLUSION

Applicants' request under 37 CFR 1.42 is **GRANTED**.

This application is being returned to the United States Designated/Elected Office for processing in accordance with this decision; and, if appropriate, a Notification of Acceptance of Application (Form PCT/DO/EO/903) will be mailed showing a 35 U.S.C. 371 date of 29 August 2002.

Debra S. Brittingham
PCT Special Programs Examiner
PCT Legal Office

Boris Milef
PCT Legal Examiner
PCT Legal Office

DSB/BM:dsb

02 JUL 2002

UNITED STATES PATENT AND TRADEMARK OFFICE

Commissioner for Patents
United States Patent and Trademark Office
Washington, D.C. 20231
www.uspto.gov

Norman F. Oblon
OBLON, SPIVAK, McCLELLAND, MAIER & NEUSTADT, P.C.
1755 S. Jefferson Davis Highway
Fourth Floor
Arlington, VA 22202

In re Application of
KAYAKIRI, Hiroshi *et al*
Application No.: 09/869,135
PCT No.: PCT/JP99/07160
Int. Filing Date: 20 December 1999
Priority Date: 24 December 1998
Attorney Docket No.: 21229US0PCT
For: IMIDAZOLE COMPOUNDS AND MEDICAL USES THEREOF

DECISION

This decision is in response to the declaration filed on 09 October 2001 which is treated as a submission under 37 CFR 1.42.

BACKGROUND

On 08 August 2001, a Notification of Missing Requirements was mailed indicating that a declaration in compliance with 37 CFR 1.497(a) and (b) was required. A two-month time limit was set for response with extensions of time available pursuant to 37 CFR 1.136(a).

On 09 October 2001, applicants filed a declaration signed by nine of the ten listed co-inventors and by three heirs of deceased co-inventor Teruo Oku.

DISCUSSION

37 CFR 1.42 *When the Inventor is Dead*, states, in part:

> In case of the death of the inventor, the legal representative (executor, administrator, etc.) of the deceased inventor may make the necessary oath or declaration, and apply for and obtain the patent.

Applicants have furnished a declaration signed by Noriko Oku, Chikako Oku and Tomohito Oku as heirs of Teruo Oku who is deceased. However, this declaration does not meet all the requirements of 37 CFR 1.497(a) and (b).

37 CFR 1.497(a)(3) requires that the citizenship of each inventor (including any deceased inventor) must be listed on the declaration. 37 CFR 1.497(b)(2) also requires that the citizenship, residence, and last mailing addresses of the legal representative (or

heirs) be recorded on the declaration.

Here, there is no indication whether the post office addresses, residences, and citizenship recorded on the declaration is that of the heirs or the deceased co-inventor. This information is the same in each box signed by the heirs. Regardless, not all of the requirements of 37 CFR 1.497 listed above has been satisfied.

It is also not clear whether all of the heirs have signed the declaration. A statement from the heirs or counsel should be submitted setting forth that they are all of the heirs of Teruo Oku and indicating whether a legal representative has been appointed or is required by the applicable law to be appointed is required.

Finally, it appears that the declaration may have been amended after the heirs signed the declaration because of three English language statements in the Japanese language side of the declaration next to the signatures of the heirs. The English language statements that the "[s]iganture was written by his . . . " suggests that these statements were written after the heirs signed the declaration. The wording of an oath or declaration cannot be amended, altered or changed in any manner after it has been signed. *See* § 602.01 MPEP.

CONCLUSION

For the reason discussed above, applicants' petition under 37 CFR 1.42 is **DISMISSED** without prejudice.

Applicants are required to provide an oath or declaration in compliance with 37 CFR 1.497(a) and (b) within a time limit of **TWO (2) MONTHS** from the mail date of this decision. Extension of time may be granted under 37 CFR 1.136.

Please direct further correspondence with respect to this matter to the Assistant Commissioner for Patents, Box PCT, Washington, D.C. 20231, and address the contents of the letter to the attention of the PCT Legal Office.

Boris Milef
PCT Legal Examiner
PCT Legal Office

James Thomson
James Thomson
Attorney Advisor
PCT Legal Office

Tel.: (703) 308-6457

25 FEB 2003

UNITED STATES PATENT AND TRADEMARK OFFICE

COMMISSIONER FOR PATENTS
UNITED STATES PATENT AND TRADEMARK OFFICE
WASHINGTON, D.C. 20231
www.uspto.gov

Norman F. Oblon
OBLON, SPIVAK, McCLELLAND, MAIER & NEUSTADT, P.C.
1755 S. Jefferson Davis Highway
Fourth Floor
Arlington, VA 22202

In re Application of
KAYAKIRI, Hiroshi *et al*
Application No.: 09/869,135
PCT No.: PCT/JP99/07160
Int. Filing Date: 20 December 1999
Priority Date: 24 December 1998
Attorney Docket No.: 21229US0PCT
For: IMIDAZOLE COMPOUNDS AND MEDICAL USES THEREOF

DECISION

This decision is in response to the "Declaration Under 37 C.F.R. §1.42" filed 29 October 2002.

BACKGROUND

On 02 July 2002, a decision dismissing applicants' petition under 37 CFR 1.42 was mailed. The declaration submitted did not contain the required information pursuant to 37 CFR 1.497(a) and (b) for the deceased inventor and the heirs. Applicants were given two months to respond.

On 29 October 2002, applicants filed a supplemental declaration signed by all three heirs of the deceased co-inventor Teruo Oku. Authorization to charge any required fees to Deposit Account 15-0030 was provided.

DISCUSSION

Applicants have furnished a "Declaration Under 37 CFR 1.42" signed by Noriko Oku, Chikako Oku and Tomohito Oku asserting that they are the "sole heirs of deceased co-inventor Teruo Oku."

The supplemental declaration states that the heirs are all "a citizen of Japan" and declares that the residence and last mailing addresses of the heirs are listed on the declaration filed 09 October 2001. The supplemental declaration also provides the residence of the deceased co-inventor at the time of his death.

The declaration and supplemental declaration complies with 37 CFR 1.497(a) and (b).

A two-month extension fee of $400.00 has been charged to Deposit Account No. 15-0030 as authorized.

CONCLUSION

The papers filed under 37 CFR 1.42 are **ACCEPTED**.

Applicants have completed the requirements for acceptance under 35 U.S.C. 371(c). The application has an international filing date of 20 December 1999, under 35 U.S.C. 363, and a 35 U.S.C. 371(c) date of **29 October 2002**.

This application is being forwarded to the United States Designated/Elected Office for further processing in accordance with this decision.

James Thomson

James Thomson
Attorney Advisor
PCT Legal Office

Tel.: (703) 308-6457

UNITED STATES PATENT AND TRADEMARK OFFICE

Commissioner for Patents
United States Patent and Trademark Office
P.O. Box 1450
Alexandria, VA 22313-1450
www.uspto.gov
DIW Oct-06

C. IRVIN MCCLELLAND
OBLON, SPIVAK, MCCLELLAND, MAIER & NEUSTADT, P.C.
1940 DUKE STREET
ALEXANDRIA VA 22314

COPY MAILED
OCT 0 4 2006
OFFICE OF PETITIONS

In re Patent No. 7,060,721	:	
Issued: 13 June, 2006	:	
Application No. 09/869,135	:	ON PETITION
Filed: 29 October, 2002	:	
Atty Dckt No. 210229USOPCT	:	

This is a decision on the petition filed on 30 June, 2006, which is being treated as a request under 37 CFR 3.81(b)[1] to correct the assignee on the front page of the above-identified patent by way of a Certificate of Correction.

The petition is **granted**.

It is noted that petitioner submitted a petition fee of $400.00 with the present petition. However, only a processing fee of $130.00 and certificate of correction fee of $100.00 are due. The overpayment will be credited to counsel's deposit account.

Telephone inquires concerning this matter may be directed to the undersigned at 571.272.3231. Any questions concerning the issuance of the Certificate of Correction should be directed to the Certificates of Correction Branch at 703.305.8309.

The file is being referred to the Certificates of Correction Branch for issuance of the requested Certificate of Correction.

D Wood

Douglas I. Wood
Senior Petitions Attorney
Office of Petitions

---

[1] See Official Gazette of 22 June, 2004.

18 NOV 2003

UNITED STATES PATENT AND TRADEMARK OFFICE

COMMISSIONER FOR PATENTS
UNITED STATES PATENT AND TRADEMARK OFFICE
P.O. BOX 1450
ALEXANDRIA, VA 22313-1450
www.uspto.gov

Kohn & Associates
30500 Northwestern Hwy.
Suite 410
Farmington Hills, MI 48334

In re Application of LEWANDOWSKI et al	:	
U.S. Application No.: 09/869,178	:	
PCT Application No.: PCT/US01/02780	:	DECISION
Int. Filing Date: 26 January 2001	:	
Priority Date Claimed: 26 January 2000	:	
Attorney Docket No.: 3114.00037	:	
For: LAMINANT CONTAINER WITH FITMENT	:	

This is in response to applicant's "Petition for Revival of an Application for Patent Abandoned Unintentionally Under 37 CFR 1.137(b)" filed 22 September 2003.

BACKGROUND

On 26 January 2001, applicant filed international application PCT/US01/02780, which claimed priority of an earlier United States application filed 26 January 2000. The twenty-month period for paying the basic national fee in the United States expired on 26 September 2001.

On 22 June 2001, applicant filed national stage papers in the United States Designated/Elected Office (DO/EO/US). The submission was accompanied by, *inter alia*, the basic national fee required by 35 U.S.C. 371(c)(1).

On 20 February 2002, the DO/EO/US mailed a Notification of Missing Requirements Under 35 U.S.C. 371 (Form PCT/DO/EO/905), which indicated that a properly executed oath or declaration in compliance with 37 CFR 1.497 must be filed.

International application PCT/US01/02780 became abandoned as to the United States for failure to timely reply to the Notification of Missing Requirements.

On 22 September 2003, applicant filed the present petition. The petition states that it is accompanied by a proper response under 35 U.S.C. 371, the petition fee set forth in 37 CFR 1.17(m), and a statement that abandonment of the application was unintentional.

DISCUSSION

Under 37 CFR 1.137(b), a petition requesting that an application be revived on the grounds of unintentional abandonment must be accompanied by: (1) the required reply unless previously filed, (2) the petition fee as set forth in 37 CFR 1.17(m), (3) a statement that the entire delay in filing the required reply from the due date for the reply until the filing of a grantable petition was unintentional, and (4) a terminal disclaimer if the application was filed before 08 June 1995.

With regard to item (1), applicant has provided the required reply under 35 U.S.C. 371.

With regard to item (2), applicant has provided the required petition fee.

With regard to item (3), applicant has provided the required statement.

With regard to item (4), because the international application was filed after 08 June 1995, no terminal disclaimer is required.

CONCLUSION

For the reasons above, the petition under 37 CFR 1.137(b) is GRANTED.

The application has an International Filing Date under 35 U.S.C. 363 of 26 January 2001, and a date under 35 U.S.C. 371(c) of 22 September 2003.

This application is being forwarded to the United States Designated/Elected Office (DO/EO/US) for further processing in accordance with this decision.

Bryan Tung
PCT Legal Examiner
PCT Legal Office

Telephone: 703-308-6614
Facsimile: 703-308-6459

UNITED STATES PATENT AND TRADEMARK OFFICE

Commissioner for Patents
United States Patent and Trademark Office
P.O. Box 1450
Alexandria, VA 22313-1450
www.uspto.gov

SIMPSON & SIMPSON, PLLC
5555 MAIN STREET
WILLIAMSVILLE, NY 14221-5406

COPY MAILED

NOV 1 8 2004

OFFICE OF PETITIONS

In re Application of: Andrea Born, et. al. :
Application No. 09/869,183 : NOTICE
Filed: August 28, 2001 :
Attorney Docket No. WSP:199US :

This is a notice regarding your request for acceptance of a fee deficiency submission under 37 CFR 1.28. On September 1, 1998, the Court of Appeals for the Federal Circuit held that 37 CFR 1.28(c) is the sole provision governing the time for correction of the erroneous payment of the issue fee as a small entity. **See DH Technology v. Synergystex International, Inc. 154 F.3d 1333, 47 USPQ2d 1865 (Fed. Cir. Sept. 1, 1998).**

The Office no longer investigates or rejects original or reissue applications under 37 CFR 1.56. **1098 Off. Gaz. Pat. Office 502 (January 3, 1989).** Therefore, nothing in this Notice is intended to imply that an investigation was done.

Your fee deficiency submission under 37 CFR 1.28 is hereby **ACCEPTED**.

This file is being referred to Technology Center Art Unit 1711, for further processing.

Inquiries related to this communication should be directed to the undersigned at (571) 272-3226.

Andrea Smith
Petitions Examiner
Office of Petitions
Office of the Deputy Commissioner
for Patent Examination Policy

UNITED STATES PATENT AND TRADEMARK OFFICE

COMMISSIONER FOR PATENTS
UNITED STATES PATENT AND TRADEMARK OFFICE
P.O. BOX 1450
ALEXANDRIA, VA 22313-1450
www.uspto.gov

Paper No. ~~17~~ 12

PATTERSON, THUENTE, SKAR & CHRISTENSEN, P.A.
4800 IDS CENTER
80 SOUTH 8TH STREET
MINNEAPOLIS MN 55402-2100

MAIL

JAN 25 2005

DIRECTOR OFFICE
TECHNOLOGY CENTER 2100

In re Application of: Sadek, et al.	)	
Application No. 09/869,205	)	
Attorney Docket No. W1028.145-US-01	)	**DECISION ON PETITION TO**
Filed: September 17, 2001	)	**WITHDRAW HOLDING OF**
For: MODEL AND METHOD FOR USING	)	**ABANDONMENT UNDER 37 CFR**
AN INTERACTIVE RATIONAL AGENT,	)	**§1.181**
MULTIAGENT SERVER AND SYSTEM	)	
IMPLEMENTING SAME		

This is a decision on the petition, filed December 13, 2004, requesting the Withdrawal of the Holding of Abandonment of the above-identified application, which has been treated as a petition under 37 CFR §1.181. The application was abandoned for failure to file a timely response to the Office action mailed on April 23, 2004. A Notice of Abandonment was mailed November 26, 2004.

In support of the petition, Petitioner provides a copy of (1) an amendment filed in response to the Office action of mail date April 23, 2004 and three separate checks (one for filing an IDS, one for extra independent claims and one combined check to cover both a 3-month extension of time and an undetermined amount of claims in a National Stage application). The Office records show each of the checks was processed on October 15, 2004. Further, Petitioner provided a postcard with a PTO stamp indicating receipt at the USPTO on October 12, 2004 of the aforementioned items. Petitioner has also noted the confirmation of abandonment stated in an interview with the examiner was made by an attorney not of record. In any event, the fact that the amendment was timely filed negates the actions taken by the examiner in accordance with the interview. The Office regrets any inconveniences this may have caused the applicant.

Petitioner has established that a response was filed on October 12, 2004 with the requisite fees for a 3-month extension of time necessary for the response to be considered timely.

M.P.E.P. § 503 states:

A post card receipt which itemizes and properly identifies the items which are being filed serves as *prima facie* evidence of receipt in the USPTO of all the items listed thereon on the date stamped thereon by the USPTO.

Accordingly, the petition is **GRANTED**. The Notice of Abandonment is **WITHDRAWN**.

The application is being forwarded to the Technology Center support staff for processing. After processing, the application will then be forwarded to the Examiner for appropriate action.

Pinchus M. Laufer
Special Programs Examiner
Technology Center 2100
Computer Architecture, Software, and Information Security
571-272-3599
MBS

SPE RESPONSE FOR CERTIFICATE OF CORRECTION

Paper No.: X

DATE : June 27, 2008

TO SPE OF : ART UNIT **1654**

SUBJECT : Request for Certificate of Correction for Appl. No.: 09/869280 Patent No.: 6821766 B1

A response is requested with respect to a request for a certificate of correction.

With respect to the change(s) requested to correct Office and/or Applicant's errors, should the patent read as shown in the certificate of correction attached herewith or the COCIN document(s), in IFW images for the above-identified patented application? No new matter should be introduced, nor should the scope or meaning of the claims be changed.

If the response is for an IFW, within **7** days, please complete and forward the response, to the employee (named below) via scanning into application images, using document code **COCX**.

DO NOT SENT TO ATTORNEY

If the response is for a paper file wrapper, please complete the response and forward the response with the paper file wrapper, to the employee (named below), within **7** days, to:

Certificates of Correction Branch (CofC)
South Tower - 9A22
Palm Location 7580

You can fax the Directors/SPE response to 571-270-9990

LAMONTE NEWSOME
Certificates of Correction Branch
703-308-9390 ext. 112

Thank You For Your Assistance

The request for issuing the above-identified correction(s) is hereby:
Note your decision on the appropriate box.

- ☒ **Approved** — **All** changes apply.
- ☐ **Approved in Part** — Specify below which changes **do not** apply.
- ☐ **Denied** — State the reasons for denial below.

Comments: _____

Cecilia J Tsang
Supervisory Patent Examiner
Technology Center 1600

Cecilia Tsang — **SPE**

1654 — **Art Unit**

30 SEP 2002

UNITED STATES PATENT AND TRADEMARK OFFICE

COMMISSIONER FOR PATENTS
UNITED STATES PATENT AND TRADEMARK OFFICE
WASHINGTON, D.C. 20231
www.uspto.gov

RECEIVED: 10/4/02
OBLON, SPIVAK, McCLELLAND
MAIER & NEUSTADT, P.C.
DOCKETING DEPT.
Initials/Date Docketed: 10/04/02
Type of Resp(s): Paper Transl. of Intl Appln
Due Date(s): 11-30-02

2 U755US 6 PCT

Gregory J. Maier
Oblon Spivak MCClelland Maier & Neustadt
1755 Jefferson Davis Highway, Fourth Floor
Arlington, VA 22202

In re Application of :
ROUX :
Application No.: 09/869,302 :
PCT No.: PCT/FR00/00101 : DECISION
Int. Filing Date: 19 January 2000 :
Priority Date: 19 January 1999 :
Attorney Docket No.: 130815.90034 :
For: SYSTEM FOR NEUTRALISING :
POLLUTANT GASES BY PYROLISIS

This is a decision on applicant's communication which is being treated as a Request for Refund filed 01 July 2002.

BACKGROUND

On 19 July 2001, applicant filed a transmittal letter for entry into the national stage in the United States of America. Filed with the transmittal letter were, inter alia: the requisite $860 basic national fee; a purported translation of the international application; four drawing sheets; and the surcharge of $130 for furnishing an oath or declaration later than 30 months from the priority claim.

On 31 August 2001, the United Stated Designated/Elected Office mailed a Notification of Missing Requirements under 35 U.S.C. 371 (Form PCT/DO/EO/905) indicating that an oath or declaration in compliance with 37 CFR 1.497 must be filed. The notification set a two-month time limit in which to respond.

On 19 October 2001, applicant filed a declaration and a preliminary amendment.

On 16 April 2002, the United States Designated/Elected Office (DO/EO/US) mailed a "NOTIFICATION OF ACCEPTANCE OF APPLICATION UNDER 35 U.S.C. 371 AND 37 CFR 1.494 OR 1.495" (Form PCT/DO/EO/903) which set forth a 35 U.S.C. 371 completion date of 05 December 2001.

On 01 July 2002, applicant filed the present request for refund.

DISCUSSION

A review of the application file and other Patent and Trademark Office records reveal applicant has not submitted an English translation of the international application as filed pursuant to 35 U.S.C. 371(c)(2). The English translation located in the application folder includes the English translation of the description of the international application and the amendments made to the claims under Article 34. Therefore, the requirements of 35 U.S.C. 371(c) for entry into the national stage in the United States of America have not been completed as indicated in the Notification of Acceptance mailed on 16 April 2002. The 16 April 2002 Notification of Acceptance of Application was erroneously mailed by the DO/EO/US and must be vacated.

Applicant's are requesting a refund of $130 charged to Deposit Account no. 15-0030 on 11 April 2002. Applicant is correct in its assertion that the $130 processing fee was charged to the Deposit Account in error, however, the request for refund is dismissed since the processing fee must be submitted with the English translation of the international application pursuant to 37 CFR 1.492(f).

CONCLUSION

The request for refund is **DISMISSED** without prejudice.

Accordingly, the 16 April 2002 Notification of Acceptance of Application is hereby **VACATED**.

Applicant is given **TWO (2) MONTHS** from the mail date of this Decision to submit a proper translation of the international application. Extensions of time may be obtained under 37 CFR 1.136(a).

Any further correspondence with respect to this matter should be addressed to the Assistant Commissioner for Patents, Box PCT, Washington, D.C. 20231, with the contents of the letter marked to the attention to the PCT Legal Office.

Richard Cole
PCT Legal Examiner
Office of PCT Legal Administration

Anthony Smith
Attorney-Advisor
Office of PCT Legal Administration
Tel: (703) 308-6314
Fax: (703) 308-6459

NOV 0 9 2001

UNITED STATES PATENT AND TRADEMARK OFFICE

COMMISSIONER FOR PATENTS
UNITED STATES PATENT AND TRADEMARK OFFICE
WASHINGTON, D.C. 20231
www.uspto.gov

ABRAHAM J. ROSNER
SUGHRUE MION ZINN MACPEAK & SEAS
2100 PENNSYLVANIA AVENUE, N.W.
WASHINGTON, DC 20037-3213

In re Application of
FUKAGAWA et al.
Application No.: 09/869,342
PCT No.: PCT/JP99/05458
Int. Filing Date: 04 October 1999
Priority Date: None
Attorney Docket No.: Q65022
For: FLUORINE-CONTAINING RESIN POWDER COATING COMPOSITION HAVING EXCELLENT PROPERTY FOR PROTECTING SUBSTRATE

DECISION ON
PAPERS UNDER 37 CFR 1.42

This a response to the declaration filed 28 June 2001 which is being treated as a request under 37 CFR 1.42. No petition fee is required.

BACKGROUND

On 04 October 1999, applicant filed international application no. PCT/JP99/05458 which claimed no priority date and designated the United States. On 18 October 1999, a Demand was filed with the International Preliminary Examining Authority electing the United States. The election was made prior to the expiration of nineteen months from the priority date. As a result, the deadline for payment of the basic national fee was extended to expire on 04 April 2002.

On 28 June 2001, applicant filed a transmittal letter for entry into the national stage in the United States accompanied, inter alia, by: the basic national fee; an English translation of the international application, preliminary amendment, and a combined declaration and power of attorney. The declaration and power of attorney is executed by: Ryoichi Fukagawa; Keisuke Tano; Daisuke Tanizawa and Nobuhiko Tsuda as joint inventors; and on behalf of deceased inventor Ryuji Iwakiri by his legal representative, Miyuki Iwakiri.

DISCUSSION

Pursuant to 37 CFR 1.42, first sentence:

"In case of the death of the inventor, the legal representative (executor, administrator, etc.) of the deceased inventor may make the necessary oath or declaration, and apply for and obtain a patent."

The declaration filed 28 June 2001 is executed by Ryuji Iwakiri as the "legal representative" of the deceased inventor. The declaration is acceptable under 37 CFR 1.42 and complies with 37 CFR 1.497(a)-(b). Accordingly, the requirements for entry into national stage under 35 U.S.C. 371(c) were completed as of 28 June 2001.

CONCLUSION

The papers filed under 37 CFR 1.42 are ACCEPTED.

The application has an international filing date of 04 October 1999, under 35 U.S.C. 363, and a 35 U.S.C. 371(c) date of **28 June 2001**.

This application is being forwarded to the National Stage Processing Branch of the International Division for continued national stage processing.

Boris Milef
PCT Legal Examiner
PCT Legal Office

Anthony Smith
Attorney-Advisor
PCT Legal Office
Tel: (703) 308-6314
Fax: (703) 308-6459

SEP 1 2001

UNITED STATES PATENT AND TRADEMARK OFFICE

#3

Commissioner for Patents
United States Patent and Trademark Office
Washington, D.C. 20231
www.uspto.gov

James S. Hsue, Esq.
Skjerven Morrill MacPherson, LLP
Three Embarcadero Center, 28th Floor
San Francisco, CA 94111

In re Application of Thomas W. Hagler Application No.: 09/869,371 PCT No.: PCT/US99/14446 Int. Filing Date: 25 June 1999 Priority Date: 26 June 1998 Attorney's Docket No.: M-10489-2P US For: Method and Apparatus for Spectrum Analysis and Encoder	DECISION ON PETITION UNDER 37 CFR 1.137(b)

This is in response to the "Petition For Revival Of An International Application For Patent Designating The U.S. Abandoned Unintentionally Under 37 C.F.R. § 1.137(b)" filed on 27 June 2001.

BACKGROUND

On 25 June 1999, this international application was filed, claiming an earliest priority date of 26 June 1998.

No Demand electing the United States was filed in this international application Accordingly, the deadline for paying the basic national fee in the United States under 35 U.S.C. 371 and 37 CFR 1.494 was 26 February 2000. This international application became abandoned with respect to the United States at midnight on 26 February 2000 for failure pay the basic national fee.

On 27 June 2001, applicant filed in the United States Patent and Trademark Office (PTO) the instant petition, and a transmittal letter for entry into the national stage in the U.S. under 35 U.S.C. 371, which was accompanied by, *inter alia*, the U.S. basic national fee. No executed declaration or oath was provided at that time.

DISCUSSION

A grantable petition to revive an abandoned application under 37 CFR 1.137(b) must be accompanied by (1) the required reply, unless previously filed. In a nonprovisional application abandoned for failure to prosecute, the required reply may be met by the filing of a continuing application; (2) the petition fee as set forth in § 1.17(m); and (3) a statement that the entire delay

in filing the required reply from the due date for the reply until the filing of a grantable petition pursuant to this paragraph was unintentional. The Commissioner may require additional information where there is a question whether the delay was unintentional; and (4) any terminal disclaimer (and fee as set forth in § 1.20 (d)) required pursuant to paragraph (c) of this section.

Petitioner has provided: (1) the proper reply by submitting the basic national filing fee, (2) the petition fee set forth in §1.17(m) and (3) the proper statement under 137(b)(3). In this application, no terminal disclaimer is required.

Accordingly, the petition is deemed to satisfy requirements (1), (2), (3) and, (4) under 37 CFR 1.137(b).

DECISION

The petition under 37 CFR 1.137(b) is **GRANTED**.

This application is being returned to the United States Designated/Elected Office (DO/EO/US) for continued processing under 35 U.S.C. 371 and for issuing a PCT/EO/DO/ form 905(Notification of missing requirements) to inform applicant that an executed Declaration or Oath is missing.

Rafael Bacares
PCT Legal Examiner
PCT Legal Office
Tel: (703) 308-6312
Fax: (703) 308-6459

UNITED STATES PATENT AND TRADEMARK OFFICE

Commissioner for Patents
United States Patent and Trademark Office
P.O. Box 1450
Alexandria, VA 22313-1450
www.uspto.gov

FOLEY & LARDNER LLP
3000 K ST NW
SUITE 500
WASHINGTON DC 20007

COPY MAILED

NOV 25 2005

OFFICE OF PETITIONS

In re	:
Ayai, et al.	: DECISION REGARDING
Application No. 09/869,376	: PATENT TERM ADJUSTMENT
Filed: June 28, 2001	:
Patent No. 6,828,508	:
Issued: December 7, 2004	

This decision is in response to the "COMMUNICATION REGARDING PATENT TERM ADJUSTMENT", filed November 30, 2004, requesting correction of the patent term adjustment (PTA) indicated on the patent.

The request is **DISMISSED**.

On March 24, 2004, the Office mailed the Determination of Patent Term Adjustment under 35 U.S.C. 154(b) in the above-identified application. The Notice stated that the patent term adjustment (PTA) to date is two hundred sixty-one (261) days. On December 7, 2004, the application issued into Patent No. 6,828,508 with a PTA of two hundred two (202) days. Patentees

submitted the instant "COMMUNICATION REGARDING PATENT TERM ADJUSTMENT" on November 30, 2004. Patentees states that they believe there was an error in their favor in the patent term adjustment calculation.

The Office determined a patent term adjustment of two hundred two (202) days based on an adjustment for PTO delay of two hundred sixty-six (266) days pursuant to 35 U.S.C. 154(b)(1)(A)(i) and 37 C.F.R. § 1.703(a)(1), and forty-six (46) days pursuant to 35 U.S.C. 154(b)(1)(A)(iv) and 37 C.F.R. § 1.703(a)(6), reduced by five (5) days of applicant delay pursuant to 35 U.S.C. 154(b)(2)(C)(ii) and 37 C.F.R. § 1.704(b) and one hundred five (105) days pursuant to 35 U.S.C. 154(b)(2)(C)(i) and 37 C.F.R. § 1.704(c)(10).

A review of the application does not reveal any errors in the calculation of the patent term adjustment. Accordingly, the correct patent term adjustment is two hundred two (202) days.

Telephone inquiries specific to this letter should be directed to Cliff Congo, Petitions Attorney, at (571)272-3207.

Karin Ferriter
Senior Legal Advisor
Office of Patent Legal Administration
Office of Deputy Commissioner
for Patent Examination Policy

SPE RESPONSE FOR CERTIFICATE OF CORRECTION

DATE : 6/15/05

Paper No.: —

TO SPE OF : ART UNIT 1647

SUBJECT : Request for Certificate of Correction on Patent No.: 6790610 B2

A response is requested with respect to the accompanying request for a certificate of correction.

Please complete this form and return with file, within 7 days to:
Palm location **7580, Certificates of Correction Branch – South Tower – 9A22**
If response is for an IFW, **return to employee (named below) via PUBSCofC Team in MADRAS.**
With respect to the change(s) requested, correcting Office and/or Applicant's errors, should the patent read as shown in the certificate of correction (COCIN)? No new matter should be introduced, nor should the scope or meaning of the claims be changed.

Thank You For Your Assistance

Virginia Tolbert
Certificates of Correction Branch
Tel. No. 703-308-9390 ext. 113

The request for issuing the above-identified correction(s) is hereby:
Note your decision on the appropriate box.

- ☑ **Approved** — All changes apply.
- ☐ **Approved in Part** — Specify below which changes do not apply.
- ☐ **Denied** — State the reasons for denial below.

Comments:

Gary Milord
SPE

1647
Art Unit

PTOL-306 (REV. 7/03)

U.S. DEPARTMENT OF COMMERCE Patent and Trademark Office

UNITED STATES PATENT AND TRADEMARK OFFICE

COMMISSIONER FOR PATENTS
UNITED STATES PATENT AND TRADEMARK OFFICE
WASHINGTON, DC 20231
www.uspto.gov

Paper No. 6

CAROL CLAYTON
WILMER, CUTLER & PICKERING
2445 M. STREET, N.W.
WASHINGTON DC 20037-1420

MAILED

MAY 1 4 2003

Technology Center 2600

In re Application of :
Johnson et al. :
Application No. 09/869,421 :
Filed: June 27, 2001 :
For: RATE ADAPTIVE PAYLOAD TRANSMISSION FOR LOCAL AREA NETWORKS :

DECISION ON REQUEST TO WITHDRAW AS ATTORNEY

This is a decision on the request to withdraw as attorney/agent of record filed on April 10, 2003.

A grantable request to withdraw as attorney/agent of record must:
(1) indicate the present mailing address of the attorney(s)/agent(s) who seek(s) to withdraw, and
(2) be signed by each attorney/agent seeking to withdraw or clearly be signed on their behalf, and
(3) be *approved* at least thirty (30) days prior to the maximum extendable period for response to any outstanding Office Action, and
(4) indicate the address to which future correspondence should be mailed.

Petitioner has met all of the above. Accordingly, the request is **GRANTED**.

Only John W. Ryan is granted the request for withdraw of attorney/agent, since he is the only attorney/agent specifically mentioned in the request, and there is no other indication that he is signing on behalf of any other practitioners. The U.S. Patent Office does not recognize withdrawal of a firm. The following attorneys/agents remain of record:

Ki Kim, Reg. No. 43,450	Andy Chen, Reg. No. 44,436
Chris McWinney, Reg. No. 42,875	Matt Phillips, Reg. No. 43,403

All future communications from the Office will be directed to the address listed below until otherwise notified by applicant. Applicant is reminded of the obligation to promptly notify the Patent and Trademark Office of any change in correspondence address to ensure receipt of all communications from the Office.

Kenneth Wieder
Special Program Examiner
Technology Center 2600
Communications
(703) 305-4710

cc: Hewlett Packard Company
Ip Administration Mail Stop 35
3404 East Harmony Road
Ft Collins CO 80528-9599

10 JUN 2002

UNITED STATES PATENT AND TRADEMARK OFFICE

#4

COMMISSIONER FOR PATENTS
UNITED STATES PATENT AND TRADEMARK OFFICE
WASHINGTON, D.C. 20231
www.uspto.gov

Sughrue, Mion, Sinn, MacPeak & Seas, PLLC
2100 Pennsylvania Avenue, NW
Washington, DC 20037-3213

In re Application of
IWAKIRI, Ryuji et al.
Application No.: 09/869,430
PCT No.: PCT/JP99/05654
Int. Filing Date: 14 October 1999
Priority Date: None
Attorney's Docket No.: Q65021
For: THERMOSETTING POWDER COATING COMPOSITION

DECISION ON

REQUEST

UNDER 37 C.F.R. 1.42

On 28 June 2001, applicants filed papers for entry into the national stage in the United States. The declaration indicated that one inventor is deceased. This has been treated as a request for status under 37 CFR 1.42.

BACKGROUND

On 14 October 1999, applicants filed international application PCT/JP99/05654, which designated the United States. A copy of the international application was communicated to the United States Patent and Trademark Office (USPTO) from the International Bureau on 19 April 2001.

A Demand electing the United States was filed with the International Preliminary Examining Authority on 01 November 1999. The election was made prior to the expiration of the nineteen months from the priority date. As a result, the deadline for payment of the basic national fee was extended to expire thirty months from the priority date, i.e., 15 April 2002 (14 April 2002 was a Sunday).

On 28 June 2001, applicants filed a submission for entry into the national stage in the United States which was accompanied by, *inter alia*, the U.S. Basic National Fee and a declaration.

DISCUSSION

Under 37 CFR 1.42, in case of the death of the inventor, the legal representative (executor, administrator, etc.) of the deceased inventor may make the necessary oath or declaration, and apply for and obtain the patent.

The declaration is signed by inventors Ryoichi Fukagawa, Keisuke Tano, Daisuke Tanizawa and Nobuhiko Tsuda and provides their citizenships, residences and mailing addresses.

Additionally, the declaration identifies Miyuki Iwakiri as "Legal Representative Ryuji Iwakiri (deceased)" and provides the citizenship, residence and mailing address of the legal representative in addition to the citizenship, and last known mailing address and residence of Ryuji Iwakiri.

CONCLUSION

For the above reasons, the request for status under 37 C.F.R. 1.42 is **GRANTED**.

The application has an international filing date of 14 October 1999 under 35 U.S.C. §363 and a date of 28 June 2001 under 35 U.S.C. §371. This application is being forwarded to the National Stage Processing Division of the Office of the PCT Operations for continued processing.

Boris Milef
PCT Legal Examiner
PCT Legal Administration

Erin M. Pender
Erin M. Pender
Attorney Advisor
PCT Legal Administration

Telephone: 703-305-0455
Facsimile: 703-308-6459

UNITED STATES PATENT AND TRADEMARK OFFICE

Commissioner for Patents
United States Patent and Trademark Office
P.O. Box 1450
Alexandria, VA 22313-1450
www.uspto.gov

D'VORAH GRAESER
THE POLKINGHORNS
9003 FLORIN WAY
UPPER MARLBORO MD 20772

COPY MAILED

JUL 29 2005

OFFICE OF PETITIONS

In re Application of	:	
Abraham Domb	:	DECISION
Application No. 09/869,519	:	ON PETITION
Filed: 17 September 2001	:	37 CFR 1.137(b)
Attorney Docket No. D01/166	:	

This is a decision on the petition under 37 CFR 1.137(b), filed 25 April 2005, to revive the above-identified application.

The petition is **DISMISSED**.

Any request for reconsideration of this decision must be submitted within TWO (2) MONTHS from the mail date of this decision. Extensions of time under 37 CFR 1.136(a) are permitted. The reconsideration request should include a cover letter entitled "Renewed Petition under 37 CFR 1.137(b)." This is **not** final agency action within the meaning of 5 U.S.C. § 704.

The above-identified application became abandoned for failure submit the issue fee in a timely manner in reply to the Notice of Allowance mailed 26 May 2004, which set a statutory period for reply of three (3) months. Accordingly, the above-identified application became abandoned on 27 August 2004.

A grantable petition under 37 CFR 1.137(b) must be accompanied by:
(1) the required reply, unless previously filed, which may be met by the filing of a continuing application in a nonprovisional application abandoned for failure to prosecute; in an application or patent, abandoned or lapsed for failure to pay the issue fee or any portion thereof, the required reply must be the payment of the issue fee or any outstanding balance thereof;
(2) the petition fee as set forth in 37 CFR 1.17(m);
(3) a statement that the entire delay in filing the required reply from the due date for the reply until the filing of a grantable petition pursuant to 37 CFR 1.137(b) was unintentional; the Commissioner may require additional information where there is a question whether the delay was unintentional.
(4) a terminal disclaimer (and fee as set forth in 37 CFR 1.20(d)) in a design application, a utility application filed before June 8, 1995, or a plant application filed before June 8, 1995. In addition, a terminal disclaimer and fee is also required for a utility or plant application filed on or after June 8, 1995 but before May 29, 2000, where the application became abandoned (1) during appeal, (2) during interference, or (3) while under secrecy order. The reason being that utility and plant patents issuing on applications filed on or after June 8, 1995 but before May 29, 2000, are eligible for patent term extension under former 35 U.S.C. 154(b) as a result of the Uruguay

Round Agreement. See 35 U.S.C. 154(b) (1999); see also 37 CFR 1.701. If such an application is abandoned (1) during appeal, (2) during interference, or (3) while under secrecy order, the patentee of a patent issuing from such an application is eligible for patent term extension for the entire period of the abandonment while the application is under appeal, interference, or a secrecy order will be dedicated to the public.

The instant petition lack(s) item(s) (1) above, in that applicant failed to pay the issue fee.

Further correspondence with respect to this matter should be addressed as follows:

By mail: Mail Stop PETITION
Commissioner for Patents
Post Office Box 1450
Alexandria, VA 22313-1450

By hand: Customer Window located at:

2011 South Clark Place
Crystal Plaza Two Lobby
Room 1B03
Arlington, VA 22202

Central Fax: (571) 273-8300
ATTN: Office of Petitions

Any questions concerning this matter may be directed to Erik Kielin at (571) 272-6051 or, in his absence, to the undersigned at (571) 272-3217.

Karen Creasy for

Brian Hearn
Petitions Examiner
Office of Petitions
Office of the Deputy Commissioner
for Patent Examination Policy

Attachment: Copy of Notice of Allowance and Notice of Allowability mailed May 26, 2004

UNITED STATES PATENT AND TRADEMARK OFFICE

Commissioner for Patents
United States Patent and Trademark Office
P.O. Box 1450
Alexandria, VA 22313-1450
www.uspto.gov

D Graeser
The Polkinghorns
9003 Florin Way
Upper Marlboro MD 20772

COPY MAILED

NOV 0 3 2005

OFFICE OF PETITIONS

In re Application of	:	
Abraham DOMB.	:	
Application No. 09/869,519	:	ON PETITION
Filed: September 17, 2001	:	
Attorney Docket No. D01/166	:	

This is a decision on the renewed petition under 37 CFR 1.137(b), filed September 28, 2005, to revive the above-identified application.

The petition is **GRANTED**.

The above-identified application became abandoned for failure to submit the issue fee in a timely manner in reply to the Notice of Allowance mailed May 26, 2004, which set a statutory period for reply of three (3) months. Accordingly, by operation of law, the above-identified application became abandoned on August 27, 2004.

The petition satisfies the conditions for revival pursuant to the provisions of 37 CFR 1.137(b) in that (1) the reply in the form of payment of the Issue Fee; (2) the petition fee of $1500; and (3) the required statement of unintentional delay have been received. Accordingly, the Issue Fee payment is accepted as having been unintentionally delayed.

Telephone inquiries concerning this decision should be directed to David A. Bucci at (571) 272-7099 or in his absence, the undersigned at (571) 272-3217.

The application file is being referred to the Office of Patent Publication.

Brian Hearn
Petitions Examiner
Office of Petitions

UNITED STATES PATENT AND TRADEMARK OFFICE

COMMISSIONER FOR PATENTS
UNITED STATES PATENT AND TRADEMARK OFFICE
P.O. BOX 1450
ALEXANDRIA, VA 22313-1450
www.uspto.gov

Jacobson Holman PLLC
400 Seventh Street, N. W.
Suite 600
Washington, DC 20004

COPY MAILED

MAR 07 2005

OFFICE OF PETITIONS

In re Application of :
Kaupo Palo :
Application No. 09/869,581 : ON PETITION
Filed: October 22, 2001 :
Attorney Docket No. P63544US1 :

This is a decision on the petition under 37 CFR 1.137(b), filed February 4, 2005, to revive the above-identified application.

The petition is **GRANTED**.

37 CFR 1.137(b)(3) requires a statement that the entire delay in filing the required reply from the due date for the reply until the filing of a grantable petition pursuant to 37 CFR 1.137(b) was unintentional. Since the statement contained in the instant petition varies from the language required by 37 CFR 1.137(b)(3), the statement is being construed as the statement required by 37 CFR 1.137(b)(3) and petitioner must notify the Office if this is **not** a correct interpretation of the statement contained in the instant petition.

Telephone inquiries concerning this decision should be directed to the undersigned at (571) 272-3223.

The application file is being referred to the Publishing Division to be processed into a patent.

Marianne E. Jenkins
Petitions Examiner
Office of Petitions
Office of the Deputy Commissioner
for Patent Examination Policy

UNITED STATES PATENT AND TRADEMARK OFFICE

COMMISSIONER FOR PATENTS
UNITED STATES PATENT AND TRADEMARK OFFICE
WASHINGTON, D.C. 20231
www.uspto.gov

OCT 24 2001

MATTHEW E. HINSCH
Townsend and Townsend and Crew
Two Embarcadero Center 8th Floor
San Francisco, Ca 94111

In re Application of YANOFSKY, Martin Application No.:09/869,582 PCT No.:PCT/US99/24407 Int. Filing Date: 15 October 1999 Priority Date: 16 October 1998 Attorney Docket No.: 19425A-00221 For: METHODS OF SUPPRESSING FLOWERING IN TRANSGENIC PLANTS	DECISION ON PETITION UNDER 37 CFR 1.137(b)

The petition to revive under 37 CFR 1.137(b) filed 28 June 2001 in the above-captioned application is hereby **GRANTED** as follows:

Applicant's statement that the "the entire delay in filing the required reply from the due date for the reply until the filing of a grantable petition under 37 CFR 1.137(b) was unintentional" meets the requirements of 37 CFR 1.137(b)(3).

A review of the application file reveals that applicant has submitted the basic national fee of $860 and the requirements of 37 CFR 1.137(b) have been satisfied. Therefore, the request to revive the application abandoned under 35 U.S.C. 371(d) is granted as to the National stage in the United States of America.

This application is being forwarded to the United States Designated/Elected Office (US/DO/EO) for continued processing including the issuance of a Notification of Missing Requirements (Form PCT/DO/EO/905) indicating that an oath or declaration along with the $130 surcharge for filing the oath or declaration after the thirty-month period is required.

Anthony Smith
Attorney-Advisor
PCT Legal Office
Telephone: (703) 308-6314
Facsimile: (703) 308-6459

UNITED STATES DEPARTMENT OF COMMERCE
Patent and Trademark Office
ASSISTANT SECRETARY AND COMMISSIONER OF
PATENTS AND TRADEMARKS Washington, D.C. 20231

Date: February, 27 20002

In re Application of:
Application Serial Number: 09/869,614
Filed: 09/07/01
Attorney Docket Number:

Subject: Response to Request for Refund

Dear Sir or Madam:

This is in response to your letter submitted 01/31/02 wherein you requested a refund of $396.00 in the above-identified application.

The request for refund is DENIED.

After thorough inspection of U.S. Patent and Trademark Office physical records and Revenue Accounting Management financial records, it is determined that you are not entitled to a refund of $396.00. In reviewing our Revenue Accounting and Management History, The charge to your deposit account for $396.00 was because in the Preliminary amendment filed 01/31/02 along with the request for refund claims 9-13, 16-18 had their multiple dependencies changed except for claim 19 in the original specification which sates" residual dust monitoring in safety vacuum cleaners, according to claims 1- 18. With claim 19 being a multiple dependent claim and the Preliminary amendment not canceling or changing the dependency, the account was debited.

This application will be returned to Central files.

Sincerely,

Theresa Okon

Legal Instrument Examiner

Technology Center 2800 – Team 4

Office of the Assistant Commissioner for Patents

UNITED STATES PATENT AND TRADEMARK OFFICE

Commissioner for Patents
United States Patent and Trademark Office
P.O. Box 1450
Alexandria, VA 22313-1450
www.uspto.gov

Date Mailed : 2-28-08

Patent No.: 6,831,882
Patent Issued : December 14, 2004
Inventor(s): Makoto Takashima, et. al.
Title: OPTICAL HEAD AND OPTICL HEAD FEEDER
Docket No.: MTS-3269us

Re: Request for Certificate of Correction

Consideration has been given your request for the issuance of a certificate of correction for the above-identified patent under the provisions of Rule 1.322or 1.323.

The alleged errors to title page, item [56]under References Cited and
Item [57] abstract, both are printed in accordance with the record and is in fact a change made by the examiner and considered to be in accordance with the permissible amendments enumerated in MPEP. 1302.04.

In view of the foregoing, your request is hereby denied.

However, further consideration will be given upon receipt of a request for reconsideration directed to Decisions & Certificates of Correction Branch.

Eva James
For Mary Diggs
Certificate of Correction Branch
(703) 308-9390 ext. 124 or ext. 125

Daniel N. Calder
P.O. box 980
Valley Forge, PA 19482

ej

UNITED STATES PATENT AND TRADEMARK OFFICE

COMMISSIONER FOR PATENTS
UNITED STATES PATENT AND TRADEMARK OFFICE
P.O. BOX 1450
ALEXANDRIA, VA 22313-1450
www.uspto.gov

MAILED

SEP 05 2006

Technology Center 2100

PEARNE & GORDON, LLP
1801 East 9th Street
Suite 1200
Cleveland, OH 44114-3108

In re Application of: Karimoto, et al.	)	
Application No. 09/869,647	)	*SUA SPONTE*
Attorney Docket No. 33764	)	WITHDRAWAL OF HOLDING OF
Filed: July 2, 2001	)	ABANDONMENT *under 37 CFR 1.181*
For: CREATION ASSISTING METHOD	)	
AND APPARATUS, AND RECORDED	)	
MEDIUM		

A review of the application reveals that a Notice of Abandonment was mailed to the Applicant on July 27, 2006. The notice incorrectly indicated that the instant application was being held abandoned for failure to respond to the Final Office action mailed on August 3, 2005. Applicant timely filed a Notice of Appeal on January 3, 2006 (two-months extension of time ($330.00) charge on 1/9/06 to deposit account 16-0820) as well as a timely filed an Appeal Brief on August 3, 2006 (extension of time for five months ($2,160.00) charged on 8/7/06 to deposit account 16-0820), wherein the Notice of Appeal, Appeal Brief and extensions of time are currently located in the file.

In view of these facts, the abandonment of the application was clearly in error and has been **VACATED**. The Office regrets any inconvenience this may have caused.

The application is being forwarded to the Supervisory Legal Instruments Examiner with instructions to **WITHDRAW** the holding of abandonment, restore the instant application to pending status and to **ENTER** the response (Appeal Brief) filed August 3, 2006. The application will then be forwarded to the Examiner of record for prompt action on the merits.

Inquiries to this decision may be directed to Special Programs Examiner Brian Johnson at (571) 272-3595.

Brian L. Johnson
Special Program Examiner
Technology Center 2100
Computer Architecture, Software, and Information Security

06 JUN 2002

UNITED STATES PATENT AND TRADEMARK OFFICE

COMMISSIONER FOR PATENTS
UNITED STATES PATENT AND TRADEMARK OFFICE
WASHINGTON, D.C. 20231
www.uspto.gov

Patrick J. O'Connell
Popovich & Wiles, P.A.
IDS Center, Suite 1902
80 South 8th Street
Minneapolis, MN 55402

In re Application of	:	
BJORCK, et al.	:	
Application No.: 09/869,677	:	DECISION
PCT No.: PCT/GB99/04445	:	
Int. Filing Date: 30 December 1999	:	
Priority Date: 31 December 1998	:	
Attorney Docket No.: 100084.416USPC	:	
For: STREPTOCOCCAL ABC TRANSPORTER PROTEIN	:	

This decision is in response to applicant's "Petition to Correct Filing Date of Application" filed 28 February 2002, requesting that the United States Patent and Trademark Office (USPTO) correct the filing receipt for the above captioned application to indicate a filing date of 09 October 2001.

The actual filing date of the present application is considered to be the international filing date, 30 December 1999. The date in the filing date portion on the filing receipt of a national stage application is the date upon which the requirements set forth in 35 U.S.C. 371(c) for entry into the national stage were completed. (See MPEP §1895.01) A close examination of the declaration filed with the USPTO finds a USPTO date stamp "Rec'd PTO/PCT 09 OCT 2001." Thus it is clear that the requirements set forth in 35 U.S.C. 371(c) for entry into the national stage were completed on 09 October 2001. Applicant's petition is therefore **GRANTED**.

The "Notification of Acceptance of Application Under 35 U.S.C. 371 and 37 CFR 1.494 or 1.495" (Form DO/EO/903) mailed 01 February 2002 is hereby **VACATED**.

This application is being returned to the United States Designated/Elected Office (US/DO/EO) for further processing in accordance with this decision, namely the issuance of a corrected filing receipt and "Notification of Acceptance of Application Under 35 U.S.C. 371 and 37 CFR 1.494 or 1.495" (Form DO/EO/903) indicating a 35 U.S.C. 371(c) date of 09 October 2001.

Boris Milef
Legal Examiner
PCT Legal Office

Derek A. Putonen
Petitions Attorney
PCT Legal Office
Tel: (703) 305-0130
Fax: (703) 308-6459

UNITED STATES PATENT AND TRADEMARK OFFICE

COMMISSIONER FOR PATENTS
UNITED STATES PATENT AND TRADEMARK OFFICE
P.O. BOX 1450
ALEXANDRIA, VA 22313-1450
www.uspto.gov

Dan C. Hu
Trop, Pruner & Hu, P. C.
8554 Katy Freeway
Suite 100
Houston, TX 77024

COPY MAILED

JUL 12 2005

OFFICE OF PETITIONS

In re Application of	:	
Loa Andersson, et al.	:	
Application No. 09/869,679	:	ON PETITION
Filed: May 21, 2002	:	
Attorney Docket No. NRF.0006US	:	

This is a decision on the petition under 37 CFR 1.137(b), filed May 16, 2005, to revive the above-identified application.

The petition is **GRANTED**.

A "Notice of Allowance and Fee(s) Due" was mailed to applicant on February 1, 2005, which set a three-month shortened statutory period for reply. Since the issue fee was not timely paid, the application became abandoned on May 2, 2005.

The Office acknowledges receipt of the issue fee, which was submitted with the petition.

Telephone inquiries concerning this decision should be directed to the undersigned at (571) 272-3223.

The application file is being referred to the Publishing Division to be processed into a patent.

Marianne E. Jenkins
Petitions Examiner
Office of Petitions

UNITED STATES PATENT AND TRADEMARK OFFICE

Commissioner for Patents
United States Patent and Trademark Office
P.O. Box 1450
Alexandria, VA 22313-1450
www.uspto.gov

In re Patent No. 6705128
Issue Date: March 16,2004
Application No. 09869732
Filed: February 5,2002
Attorney Docket No. 6541-1004

:

:DECISION GRANTING PETITION
:UNDER 37 CFR 1.378(c)

:

This is a decision on the electronic petition, filed September 5,2008 ,under 37 CFR 1.378(c) to accept the unintentionally delayed payment of the 3.5 year maintenance fee for the above-identified patent.

The petition is **GRANTED**.

The maintenance fee is accepted, and the above-identified patent reinstated as of September 5,2008 . This decision also constitutes notice that the fee has been accepted. An electronic copy of the petition and this decision has been created as an entry in the Image File Wrapper. Nevertheless, petitioner should print and retain an independent copy.

Telephone inquiries related to this electronic decision should be directed to the Electronic Business Center at 1-866-217-9197.

Under the Paperwork Reduction Act of 1995, no persons are required to respond to a collection of information unless it displays valid OMB control number.

PETITION TO ACCEPT UNINTENTIONALLY DELAYED PAYMENT OF MAINTENANCE FEE IN AN EXPIRED PATENT (37 CFR 1.378(c))

Patent Number	Issue Date (YYYY-MM-DD)	Application Number	Filing Date (YYYY-MM-DD)	Docket Number (if applicable)
6705128	2004-03-16	09869732	2002-02-05	926541-922836

CAUTION: Maintenance fee (and surcharge, if any) payment must correctly identify: (1) the patent number and (2) the application number of the actual U.S. application leading to issuance of that patent to ensure the fee(s) is/are associated with the correct patent. 37 CFR 1.366(c) and (d).

SMALL ENTITY
☒ Patentee claims, or has previously claimed, small entity status. See 37 CFR 1.27.

LOSS OF ENTITLEMENT TO SMALL ENTITY STATUS
☐ Patentee is no longer entitled to small entity status. See 37 CFR 1.27(g)

NOT Small Entity			Small Entity		
	Fee	Code		Fee	Code
○	3 ½ year	(1551)	◉	3 ½ year	(2551)
○	7 ½ year	(1552)	○	7 ½ year	(2552)
○	11 ½ year	(1553)	○	11 ½ year	(2553)

SURCHARGE
The surcharge required by 37 CFR 1.20(i)(2) (Fee Code 1558) must be paid as a condition of accepting unintentionally delayed payment of the maintenance fee.

MAINTENANCE FEE (37 CFR 1.20(e)-(g))
The appropriate maintenance fee must be submitted with this petition.

STATEMENT
THE UNDERSIGNED CERTIFIES THAT THE DELAY IN PAYMENT OF THE MAINTENANCE FEE TO THIS PATENT WAS UNINTENTIONAL

PETITIONER(S) REQUEST THAT THE DELAYED PAYMENT OF THE MAINTENANCE FEE BE ACCEPTED AND THE PATENT REINSTATED

THIS PORTION MUST BE COMPLETED BY THE SIGNATORY OR SIGNATORIES

37 CFR 1.378(d) states: "Any petition under this section must be signed by an attorney or agent registered to practice before the Patent and Trademark Office, or by the patentee, the assignee, or other party in interest."

I certify, in accordance with 37 CFR 1.4(d)(4) that I am

◉ An attorney or agent registered to practice before the Patent and Trademark Office

○ A sole patentee

○ A joint patentee; I certify that I am authorized to sign this submission on behalf of all the other patentees.

○ A joint patentee; all of whom are signing this e-petition

○ The assignee of record of the entire interest

Patent Practitioner			
A signature of the applicant or representative is required in accordance with 37 CFR 1.33 and 10.18. Please see 37 CFR 1.4(d) for the form of the signature			
Signature	/Mark J. Nahnsen/	Date (YYYY-MM-DD)	2008-09-05
Name	Mark J. Nahnsen	Registration Number	51093

This collection of information is required by 37 CFR 1.378(c). The information is required to obtain or retain a benefit by the public which is to file (and by the USPTO to process) an application. Confidentiality is governed by 35 U.S.C. 122 and 37 CFR 1.11 and 1.14. This collection is estimated to take 1 hour to complete, including gathering, preparing, and submitting the completed application form to the USPTO. Time will vary depending upon the individual case. Any comments on the amount of time you require to complete this form and/ or suggestions for reducing this burden, should be sent to the Chief Information Officer, U.S. Patent and Trademark Office, U.S. Department of Commerce, P.O. Box 1450, Alexandria, VA 22313-1450. DO NOT SEND FEES OR COMPLETED FORMS TO THIS ADDRESS. **This form can only be used when in conjunction with EFS-Web. If this form is mailed to the USPTO, it may cause delays in reinstating the patent.**

Privacy Act Statement

The Privacy Act of 1974 (P.L. 93-579) requires that you be given certain information in connection with your submission of the attached form related to a patent application or patent. Accordingly, pursuant to the requirements of the Act, please be advised that: (1) the general authority for the collection of this information is 35 U.S.C. 2(b)(2); (2) furnishing of the information solicited is voluntary; and (3) the principal purpose for which the information is used by the U.S. Patent and Trademark Office is to process and/or examine your submission related to a patent application or patent. If you do not furnish the requested information, the U.S. Patent and Trademark Office may not be able to process and/or examine your submission, which may result in termination of proceedings or abandonment of the application or expiration of the patent.

The information provided by you in this form will be subject to the following routine uses:

1. The information on this form will be treated confidentially to the extent allowed under the Freedom of Information Act (5 U.S.C. 552) and the Privacy Act (5 U.S.C. 552a). Records from this system of records may be disclosed to the Department of Justice to determine whether the Freedom of Information Act requires disclosure of these record s.

2. A record from this system of records may be disclosed, as a routine use, in the course of presenting evidence to a court, magistrate, or administrative tribunal, including disclosures to opposing counsel in the course of settlement negotiations.

3. A record in this system of records may be disclosed, as a routine use, to a Member of Congress submitting a request involving an individual, to whom the record pertains, when the individual has requested assistance from the Member with respect to the subject matter of the record.

4. A record in this system of records may be disclosed, as a routine use, to a contractor of the Agency having need for the information in order to perform a contract. Recipients of information shall be required to comply with the requirements of the Privacy Act of 1974, as amended, pursuant to 5 U.S.C. 552a(m).

5. A record related to an International Application filed under the Patent Cooperation Treaty in this system of records may be disclosed, as a routine use, to the International Bureau of the World Intellectual Property Organization, pursuant to the Patent Cooperation Treaty.

6. A record in this system of records may be disclosed, as a routine use, to another federal agency for purposes of National Security review (35 U.S.C. 181) and for review pursuant to the Atomic Energy Act (42 U.S.C. 218(c)).

7. A record from this system of records may be disclosed, as a routine use, to the Administrator, General Services, or his/her designee, during an inspection of records conducted by GSA as part of that agency's responsibility to recommend improvements in records management practices and programs, under authority of 44 U.S.C. 2904 and 2906. Such disclosure shall be made in accordance with the GSA regulations governing inspection of records for this purpose, and any other relevant (i.e., GSA or Commerce) directive. Such disclosure shall not be used to make determinations about individuals.

8. A record from this system of records may be disclosed, as a routine use, to the public after either publication of the application pursuant to 35 U.S.C. 122(b) or issuance of a patent pursuant to 35 U.S.C. 151. Further, a record may be disclosed, subject to the limitations of 37 CFR 1.14, as a routine use, to the public if the record was filed in an application which became abandoned or in which the proceedings were terminated and which application is referenced by either a published application, an application open to public inspections or an issued patent.

9. A record from this system of records may be disclosed, as a routine use, to a Federal, State, or local law enforcement agency, if the USPTO becomes aware of a violation or potential violation of law or regulation.

23 AUG 2002

UNITED STATES PATENT AND TRADEMARK OFFICE

COMMISSIONER FOR PATENTS
UNITED STATES PATENT AND TRADEMARK OFFICE
WASHINGTON, D.C. 20231
www.uspto.gov

Hueschen and Sage, PLLC
500 Columbia Plaza
350 East Michigan Avenue
Kalamazoo, MI 49007-3856

In re Application of GIRAUD et al	:	
U.S. Application No.: 09/869,768	:	
Int. Application No.: PCT/FR99/03317	:	DECISION
Int. Filing Date: 30 December 1999	:	
Priority Date: 31 December 1998	:	
Attorney Docket No.: CR1PCT/lw	:	
For: DISPENSER OF OBJECTS	:	

This is in response to applicant's "Petition to Withdraw Holding of Abandonment Under 37 CFR § 1.181" filed 09 August 2002.

BACKGROUND

On 30 December 1999, applicant filed international application PCT/FR99/03317, which claimed priority of an earlier France application filed 31 December 1998. A copy of the international application was communicated to the USPTO from the International Bureau on 13 July 2000. A Demand for international preliminary examination, in which the United States was elected, was filed on 21 July 2000, prior to the expiration of nineteen months from the priority date. Accordingly, the thirty-month period for paying the basic national fee in the United States expired at midnight on 02 July 2001 (30 June 2001 was a Saturday).

On 29 June 2001, applicant filed national stage papers in the United States Designated/Elected Office (DO/EO/US). The submission was accompanied by, *inter alia*, the basic national fee required by 35 U.S.C. 371(c)(1).

On 07 September 2001, the DO/EO/US mailed a Notification of Missing Requirements Under 35 U.S.C. 371 (Form PCT/DO/EO/905), which indicated that an oath or declaration in compliance with 37 CFR 1.497 must be filed. A copy of Form PCT/DO/EO/905 as mailed is attached to this decision.

On 06 February 2002, the DO/EO/US mailed a duplicate Notification of Missing Requirements Under 35 U.S.C. 371 (Form PCT/DO/EO/905).

On 24 May 2002, applicant filed a response to the Notification of Missing Requirements mailed 06 February 2002.

On 26 July 2002, the DO/EO/US mailed a Notice of Abandonment, which stated that the present application is abandoned for failure to timely respond to the "Notice to File Missing Parts (Notice) mailed on 02/07/2002".

On 09 August 2002, applicant filed the present petition under 37 CFR 1.181. The petition states that a proper response to the 06 February 2002 Notification of Missing Requirements was filed on 24 May 2002.

DISCUSSION

The Notice of Abandonment mailed 26 July 2002 was erroneous. The application is abandoned as to the United States for failure to timely respond to the Notification of Missing Requirements mailed 07 September 2001. The response filed 24 May 2002 was untimely.

CONCLUSION

For the reasons above, the petition under 37 CFR 1.181 is DISMISSED.

The Notice of Abandonment mailed 26 July 2002 is hereby VACATED.

This application is being forwarded to the United States Designated/Elected Office (DO/EO/US) for further processing in accordance with this decision, including preparation and mailing of a Notification of Abandonment (Form PCT/DO/EO/909), which should indicate that the present application is abandoned as to the United States for failure to timely respond to the Notification of Missing Requirements mailed 07 September 2001.

Bryan Tung
PCT Legal Examiner
PCT Legal Office

Telephone: 703-308-6614
Facsimile: 703-308-6459

18 SEP 2002

UNITED STATES PATENT AND TRADEMARK OFFICE

COMMISSIONER FOR PATENTS
UNITED STATES PATENT AND TRADEMARK OFFICE
WASHINGTON, D.C. 20231
www.uspto.gov

Hueschen and Sage, PLLC
500 Columbia Plaza
350 East Michigan Avenue
Kalamazoo, MI 49007-3856

In re Application of GIRAUD et al	:	
U.S. Application No.: 09/869,768	:	
Int. Application No.: PCT/FR99/03317	:	DECISION
Int. Filing Date: 30 December 1999	:	
Priority Date: 31 December 1998	:	
Attorney Docket No.: CR1PCT/lw	:	
For: DISPENSER OF OBJECTS	:	

This is in response to applicant's "Petition to Withdraw Holding of Abandonment Under 37 CFR § 1.181" filed 29 August 2002, "Supplemental to the Petition to Withdraw Holding of Abandonment Under 37 CFR § 1.181" filed 16 September 2002, and "Petition Under 37 CFR §1.47" filed 24 May 2002.

BACKGROUND

On 30 December 1999, applicant filed international application PCT/FR99/03317, which claimed priority of an earlier France application filed 31 December 1998. A copy of the international application was communicated to the USPTO from the International Bureau on 13 July 2000. A Demand for international preliminary examination, in which the United States was elected, was filed on 21 July 2000, prior to the expiration of nineteen months from the priority date. Accordingly, the thirty-month period for paying the basic national fee in the United States expired at midnight on 02 July 2001 (30 June 2001 was a Saturday).

On 29 June 2001, applicant filed national stage papers in the United States Designated/Elected Office (DO/EO/US). The submission was accompanied by, *inter alia*, the basic national fee required by 35 U.S.C. 371(c)(1).

On 07 September 2001, the DO/EO/US mailed a Notification of Missing Requirements Under 35 U.S.C. 371 (Form PCT/DO/EO/905), which indicated that an oath or declaration in compliance with 37 CFR 1.497 must be filed.

On 06 February 2002, the DO/EO/US mailed a duplicate Notification of Missing Requirements Under 35 U.S.C. 371 (Form PCT/DO/EO/905).

On 24 May 2002, applicant filed a response to the Notification of Missing Requirements mailed 06 February 2002, including a petition under 37 CFR 1.47(a).

On 26 July 2002, the DO/EO/US mailed a Notice of Abandonment, which stated that the present application is abandoned for failure to timely respond to the "Notice to File Missing Parts (Notice) mailed on 02/07/2002".

On 09 August 2002, applicant filed a petition under 37 CFR 1.181 to withdraw the holding of abandonment.

On 23 August 2002, this Office mailed a decision dismissing the 09 August 2002 petition, vacating the 26 July 2002 Notice of Abandonment, and directing the DO/EO/US to prepare a Notification of Abandonment (Form PCT/DO/EO/909).

On 29 August 2002, applicant filed a renewed petition under 37 CFR 1.181.

On 30 August 2002, the DO/EO/US mailed a Notification of Abandonment (Form PCT/DO/EO/909), which indicated that the application is abandoned as to the United States for failure to timely respond to the Notification of Missing Requirements mailed 07 September 2001.

On 16 September 2002, applicant filed a supplement to the renewed petition under 37 CFR 1.181.

DISCUSSION

I. Petition under 37 CFR 1.181

According to the Official Gazette at 1156 OG 53 and MPEP 711.03(c), a petition to withdraw a holding of abandonment based on failure to receive an Office communication must include: (1) a statement by the practitioner that the Office communication was not received by the practitioner, (2) a statement by the practitioner that he searched the application file jacket and docket records and that the search indicates that the Office communication was not received, and (3) a copy of the docket record where the non-received Office communication would have been entered had it been received and docketed.

With regard to item (1) above, applicant's representative has provided the required statement.

With regard to item (2) above, applicant's representative has provided the required statement.

With regard to item (3) above, applicant's representative has furnished a docket record listing all responses due to the USPTO for 07 November 2001, i.e. the due date for response to the Notification of Missing Requirements mailed 07 September 2001. The docket record reflects a lack of any response due to a Notification of Missing Requirements for the relevant date. Accordingly, the evidence of record is sufficient to reasonably establish that the Notification of Missing Requirements mailed 07 September 2001 was never received by applicant.

II. Petition Under 37 CFR 1.47(a)

A petition under 37 CFR 1.47(a) must be accompanied by: (1) an oath or declaration by each applicant on his or her own behalf and on behalf of the nonsigning joint inventors, (2) factual proof that the missing joint inventors refuse to join in the application or cannot be reached after diligent effort, (3) the fee set forth in §1.17(i), and (4) the last known addresses of the nonsigning joint inventors.

With regard to item (1) above, applicant has submitted a declaration signed by inventor Roger Nobilet on his own behalf and on behalf of nonsigning inventor Jean-Pierre Giraud.

With regard to item (2) above, MPEP 409.03(d) states in relevant part,

> Where inability to find or reach a nonsigning inventor "after diligent effort" is the reason for filing under 37 CFR 1.47, an affidavit or declaration of facts should be submitted which fully describes the exact facts which are relied on to establish that a diligent effort was made. . . . The affidavit or declaration of facts must be signed, where at all possible, by a person having firsthand knowledge of the facts recited therein. Statements based on hearsay will not normally be accepted. Copies of documentary evidence such as certified mail return receipt, cover letter of instructions, telegrams, etc., that support a finding that the nonsigning inventor could not be found or reached should be made part of the affidavit or declaration. It is important that the affidavit or declaration contain statements of fact as opposed to conclusions.
>
> * * *
>
> Where a refusal to sign the application papers is alleged, the circumstances of this refusal must be specified in an affidavit or declaration by the person to whom the refusal was made. Statements by a party not present when an oral refusal is made will not be accepted.
>
> Before a refusal can be alleged, it must be demonstrated that a bona fide attempt was made to present a copy of the application papers (specification, including claims, drawings, and oath or declaration) to the nonsigning inventor for signature. A copy of the application papers should be sent to the last known address of the nonsigning inventor, or, if the nonsigning inventor is represented by counsel, to the address of the nonsigning inventor's attorney.
>
> When there is an express oral refusal, that fact along with the time and place of the refusal must be stated in the affidavit or declaration. When there is an express written refusal, a copy of the document evidencing that refusal must be made part of the affidavit or declaration.

> When it is concluded by the 37 CFR 1.47 applicant that a nonsigning inventor's conduct constitutes a refusal, all facts upon which that conclusion is based should be stated in the affidavit or declaration. If there is documentary evidence to support facts alleged in the affidavit or declaration, such evidence should be submitted. Whenever a nonsigning inventor gives a reason for refusing to sign the application oath or declaration, that reason should be stated in the affidavit or declaration.

The present petition fails to state whether Mr. Giraud cannot be located or refuses to sign. Furthermore, while the petition states that letters were sent to Mr. Giraud (see affidavit of M. Jean Calvo), English language translations of the letters have not been provided. Therefore, it would not be reasonable to conclude at the present time that Mr. Giraud either cannot be located or refuses to sign.

Applicant is advised that a diligent effort to locate a nonsigning inventor should extend beyond postal mail. More specifically, applicant should provide evidence of additional attempts to locate the nonsigning inventor, e.g. by obtaining a forwarding address and by trying to reach the nonsigning inventor by telephone, electronic mail, and through his former employer, former coworkers, friends, and family members. In the event refusal to sign is alleged, an appropriate affidavit from the person(s) with firsthand knowledge of the evidence set forth in MPEP 409.03(d) as discussed above should be provided.

With regard to item (3) above, applicant has provided the requisite petition fee.

With regard to item (4) above, the petition states the last known address of the nonsigning inventor.

CONCLUSION

For the reasons set forth in §I above, the renewed petition under 37 CFR 1.181 is GRANTED.

The Notification of Abandonment (Form PCT/DO/EO/909) mailed 30 August 2002 is hereby VACATED.

For the reasons set forth in §II above, the petition under 37 CFR 1.47(a) is DISMISSED without prejudice.

If reconsideration on the merits of the petition under 37 CFR 1.47(a) is desired, a proper response must be filed within TWO (2) MONTHS from the mail date of this decision. Failure to timely file a proper response will result in abandonment of the application. Any reconsideration request should include a cover letter entitled "Renewed Petition Under 37 CFR 1.47(a)". No additional petition fee is required. Extensions of time are available under 37 CFR 1.136(a).

Please direct further correspondence with respect to this matter to the Commissioner for Patents, Box PCT, Washington, D.C. 20231, and address the contents of the letter to the attention of the PCT Legal Office.

Bryan Tung
PCT Legal Examiner
PCT Legal Office

Telephone: 703-308-6614
Facsimile: 703-308-6459

#15

UNITED STATES PATENT AND TRADEMARK OFFICE

COMMISSIONER FOR PATENTS
UNITED STATES PATENT AND TRADEMARK OFFICE
WASHINGTON, D.C. 20231
www.uspto.gov

29 APR 2003

Hueschen and Sage, PLLC
500 Columbia Plaza
350 East Michigan Avenue
Kalamazoo, MI 49007-3856

In re Application of GIRAUD et al	:	
U.S. Application No.: 09/869,768	:	
Int. Application No.: PCT/FR99/03317	:	DECISION
Int. Filing Date: 30 December 1999	:	
Priority Date: 31 December 1998	:	
Attorney Docket No.: CR1PCT/lw	:	
For: DISPENSER OF OBJECTS	:	

This is in response to applicant's "Renewed Petition Under 37 CFR § 1.47(a)" filed 11 February 2003.

BACKGROUND

On 30 December 1999, applicant filed international application PCT/FR99/03317, which claimed priority of an earlier France application filed 31 December 1998. A copy of the international application was communicated to the USPTO from the International Bureau on 13 July 2000. A Demand for international preliminary examination, in which the United States was elected, was filed on 21 July 2000, prior to the expiration of nineteen months from the priority date. Accordingly, the thirty-month period for paying the basic national fee in the United States expired at midnight on 02 July 2001 (30 June 2001 was a Saturday).

On 29 June 2001, applicant filed national stage papers in the United States Designated/Elected Office (DO/EO/US). The submission was accompanied by, *inter alia*, the basic national fee required by 35 U.S.C. 371(c)(1).

On 07 September 2001, the DO/EO/US mailed a Notification of Missing Requirements Under 35 U.S.C. 371 (Form PCT/DO/EO/905), which indicated that an oath or declaration in compliance with 37 CFR 1.497 must be filed.

On 06 February 2002, the DO/EO/US mailed a duplicate Notification of Missing Requirements Under 35 U.S.C. 371 (Form PCT/DO/EO/905).

On 24 May 2002, applicant filed a response to the Notification of Missing Requirements mailed 06 February 2002, including a petition under 37 CFR 1.47(a).

On 26 July 2002, the DO/EO/US mailed a Notice of Abandonment, which stated that the present application is abandoned for failure to timely respond to the "Notice to File Missing Parts (Notice) mailed on 02/07/2002".

On 09 August 2002, applicant filed a petition under 37 CFR 1.181 to withdraw the holding of abandonment.

On 23 August 2002, this Office mailed a decision dismissing the 09 August 2002 petition, vacating the 26 July 2002 Notice of Abandonment, and directing the DO/EO/US to prepare a Notification of Abandonment (Form PCT/DO/EO/909).

On 29 August 2002, applicant filed a renewed petition under 37 CFR 1.181.

On 30 August 2002, the DO/EO/US mailed a Notification of Abandonment (Form PCT/DO/EO/909), which indicated that the application is abandoned as to the United States for failure to timely respond to the Notification of Missing Requirements mailed 07 September 2001.

On 16 September 2002, applicant filed a supplement to the renewed petition under 37 CFR 1.181.

On 18 September 2002, this Office mailed a decision granting the 16 September 2002 petition under 37 CFR 1.181 and dismissing the 24 May 2002 petition under 37 CFR 1.47(a).

On 11 February 2002, applicant filed the present renewed petition under 37 CFR 1.47(a).

DISCUSSION

A petition under 37 CFR 1.47(a) must be accompanied by: (1) an oath or declaration by each applicant on his or her own behalf and on behalf of the nonsigning joint inventors, (2) factual proof that the missing joint inventors refuse to join in the application or cannot be reached after diligent effort, (3) the fee set forth in §1.17(i), and (4) the last known addresses of the nonsigning joint inventors.

Applicant has previously satisfied items (1), (3), and (4) above.

With regard to item (2) above, MPEP 409.03(d) states in relevant part,

> Where a refusal to sign the application papers is alleged, the circumstances of this refusal must be specified in an affidavit or declaration by the person to whom the refusal was made. Statements by a party not present when an oral refusal is made will not be accepted.

> Before a refusal can be alleged, it must be demonstrated that a bona fide attempt was made to present a copy of the application papers (specification, including claims, drawings, and oath or declaration) to the nonsigning inventor for signature. A copy of the application papers should be sent to the last known address of the nonsigning inventor, or, if the nonsigning inventor is represented by counsel, to the address of the nonsigning inventor's attorney.
>
> When there is an express oral refusal, that fact along with the time and place of the refusal must be stated in the affidavit or declaration. When there is an express written refusal, a copy of the document evidencing that refusal must be made part of the affidavit or declaration.
>
> When it is concluded by the 37 CFR 1.47 applicant that a nonsigning inventor's conduct constitutes a refusal, all facts upon which that conclusion is based should be stated in the affidavit or declaration. If there is documentary evidence to support facts alleged in the affidavit or declaration, such evidence should be submitted. Whenever a nonsigning inventor gives a reason for refusing to sign the application oath or declaration, that reason should be stated in the affidavit or declaration.

The present renewed petition states that inventor Jean-Pierre Giraud refuses to sign the declaration. However, petitioner has not demonstrated that a bona fide attempt was made to present a complete copy of the application papers (including specification, claims, drawings, and oath/declaration) to Giraud for signature. Although the letters sent to Giraud on 30 January 2002, 21 February 2002, and 05 November 2002 state that powers of attorney were enclosed, no evidence has been presented which illustrates that the specification, claims, and drawings have been sent to Giraud. Furthermore, although one or more of the letters referred to the "urgency" of the matter, none of the letters indicated a date by which Giraud was required to respond, nor did any of the letters state that failure to respond by that date would be treated as a refusal to sign. Thus, it would be unreasonable to conclude at the present time that Giraud refuses to join in the application.

CONCLUSION

For the reasons above, the renewed petition under 37 CFR 1.47(a) is DISMISSED without prejudice.

If reconsideration on the merits of the petition under 37 CFR 1.47(a) is desired, a proper response must be filed within TWO (2) MONTHS from the mail date of this decision. Failure to timely file a proper response will result in abandonment of the application. Any reconsideration request should include a cover letter entitled "Renewed Petition Under 37 CFR 1.47(a)". No additional petition fee is required. Extensions of time are available under 37 CFR 1.136(a).

Please direct further correspondence with respect to this matter to the Commissioner for Patents, Box PCT, Washington, D.C. 20231, and address the contents of the letter to the attention of the PCT Legal Office.

Applicant is advised that, effective May 1, 2003, the Office is changing its correspondence address. Any further correspondence with respect to this matter deposited with the United States Postal Service on or after May 1, 2003 should be addressed to: Mail Stop PCT, Commissioner for Patents, Office of PCT Legal Administration, P.O. Box 1450, Alexandria, Virginia 22313-1450, with the contents of the letter marked to the attention of the Office of PCT Legal Administration.

Bryan Tung
PCT Legal Examiner
PCT Legal Office

Telephone: 703-308-6614
Facsimile: 703-308-6459

15 OCT 2003

#12

UNITED STATES PATENT AND TRADEMARK OFFICE

COMMISSIONER FOR PATENTS
UNITED STATES PATENT AND TRADEMARK OFFICE
WASHINGTON, D.C. 20231
www.uspto.gov

Hueschen and Sage, PLLC
500 Columbia Plaza
350 East Michigan Avenue
Kalamazoo, MI 49007-3856

In re Application of GIRAUD et al	:	
U.S. Application No.: 09/869,768	:	
Int. Application No.: PCT/FR99/03317	:	DECISION
Int. Filing Date: 30 December 1999	:	
Priority Date: 31 December 1998	:	
Attorney Docket No.: CR1PCT/lw	:	
For: DISPENSER OF OBJECTS	:	

This is in response to applicant's "Renewed Petition Under 37 CFR § 1.47(a)" filed 01 August 2003 and "Transmittal of Duplicate Renewed Petition" filed 06 October 2003.

BACKGROUND

On 30 December 1999, applicant filed international application PCT/FR99/03317, which claimed priority of an earlier France application filed 31 December 1998. A copy of the international application was communicated to the USPTO from the International Bureau on 13 July 2000. A Demand for international preliminary examination, in which the United States was elected, was filed on 21 July 2000, prior to the expiration of nineteen months from the priority date. Accordingly, the thirty-month period for paying the basic national fee in the United States expired at midnight on 02 July 2001 (30 June 2001 was a Saturday).

On 29 June 2001, applicant filed national stage papers in the United States Designated/Elected Office (DO/EO/US). The submission was accompanied by, *inter alia*, the basic national fee required by 35 U.S.C. 371(c)(1).

On 07 September 2001, the DO/EO/US mailed a Notification of Missing Requirements Under 35 U.S.C. 371 (Form PCT/DO/EO/905), which indicated that an oath or declaration in compliance with 37 CFR 1.497 must be filed.

On 06 February 2002, the DO/EO/US mailed a duplicate Notification of Missing Requirements Under 35 U.S.C. 371 (Form PCT/DO/EO/905).

On 24 May 2002, applicant filed a response to the Notification of Missing Requirements mailed 06 February 2002, including a petition under 37 CFR 1.47(a).

On 26 July 2002, the DO/EO/US mailed a Notice of Abandonment, which stated that the present application is abandoned for failure to timely respond to the "Notice to File Missing Parts (Notice) mailed on 02/07/2002".

On 09 August 2002, applicant filed a petition under 37 CFR 1.181 to withdraw the holding of abandonment.

On 23 August 2002, this Office mailed a decision dismissing the 09 August 2002 petition, vacating the 26 July 2002 Notice of Abandonment, and directing the DO/EO/US to prepare a Notification of Abandonment (Form PCT/DO/EO/909).

On 29 August 2002, applicant filed a renewed petition under 37 CFR 1.181.

On 30 August 2002, the DO/EO/US mailed a Notification of Abandonment (Form PCT/DO/EO/909), which indicated that the application is abandoned as to the United States for failure to timely respond to the Notification of Missing Requirements mailed 07 September 2001.

On 16 September 2002, applicant filed a supplement to the renewed petition under 37 CFR 1.181.

On 18 September 2002, this Office mailed a decision granting the 16 September 2002 petition under 37 CFR 1.181 and dismissing the 24 May 2002 petition under 37 CFR 1.47(a).

On 11 February 2003, applicant filed a renewed petition under 37 CFR 1.47(a).

On 29 April 2003, this Office mailed a decision dismissing the 11 February 2003 petition.

On 01 August 2003, applicant filed a renewed petition under 37 CFR 1.47(a).

On 06 October 2003, applicant filed a copy of the 01 August 2003 renewed petition.

DISCUSSION

A petition under 37 CFR 1.47(a) must be accompanied by: (1) an oath or declaration by each applicant on his or her own behalf and on behalf of the nonsigning joint inventors, (2) factual proof that the missing joint inventors refuse to join in the application or cannot be reached after diligent effort, (3) the fee set forth in §1.17(i), and (4) the last known addresses of the nonsigning joint inventors.

Applicant has previously satisfied items (1), (3), and (4) above.

With regard to item (2) above, MPEP 409.03(d) states in relevant part,

> Where a refusal to sign the application papers is alleged, the circumstances of this refusal must be specified in an affidavit or declaration by the person to whom the refusal was made. Statements by a party not present when an oral refusal is made will not be accepted.
>
> Before a refusal can be alleged, it must be demonstrated that a bona fide attempt was made to present a copy of the application papers (specification, including claims, drawings, and oath or declaration) to the nonsigning inventor for signature. A copy of the application papers should be sent to the last known address of the nonsigning inventor, or, if the nonsigning inventor is represented by counsel, to the address of the nonsigning inventor's attorney.
>
> When there is an express oral refusal, that fact along with the time and place of the refusal must be stated in the affidavit or declaration. When there is an express written refusal, a copy of the document evidencing that refusal must be made part of the affidavit or declaration.
>
> When it is concluded by the 37 CFR 1.47 applicant that a nonsigning inventor's conduct constitutes a refusal, all facts upon which that conclusion is based should be stated in the affidavit or declaration. If there is documentary evidence to support facts alleged in the affidavit or declaration, such evidence should be submitted. Whenever a nonsigning inventor gives a reason for refusing to sign the application oath or declaration, that reason should be stated in the affidavit or declaration.

The present renewed petition states that inventor Jean-Pierre Giraud refuses to sign the declaration. The renewed petition adequately demonstrates that a bona fide attempt was made to present a complete copy of the application papers (including specification, claims, drawings, and oath/declaration) to Giraud for signature. Specifically, a complete copy of the application papers was delivered by mail to Giraud on 13 June 2003. Furthermore, the renewed petition sufficiently illustrates Giraud's refusal to sign the application papers. Specifically, the copy of the application papers was accompanied by a cover letter which required Giraud to respond by a certain date and which stated that non-response would be treated as a refusal to sign. The renewed petition states that Giraud never responded to the correspondence. Therefore, it can be concluded with reasonable certainty that Giraud refuses to join in the application.

CONCLUSION

For the reasons above, the renewed petition under 37 CFR 1.47(a) is GRANTED.

This application has an international filing date of 30 December 1999 and a date under 35 U.S.C. 371(c) of 24 May 2002.

As set forth in 37 CFR 1.47(a), a notice of the filing of this application will be forwarded to the nonsigning inventor at the last known address of record and will be published in the *Official Gazette*.

The application is being forwarded to the DO/EO/US for processing in accordance with this decision.

Bryan Tung
PCT Legal Examiner
PCT Legal Office

Telephone: 703-308-6614
Facsimile: 703-308-6459

15 OCT 2003

#17

UNITED STATES PATENT AND TRADEMARK OFFICE

COMMISSIONER FOR PATENTS
UNITED STATES PATENT AND TRADEMARK OFFICE
P.O. BOX 1450
ALEXANDRIA, VA 22313-1450
www.uspto.gov

Jean-Pierre Giraud
7, rue de la Nativité
75012 Paris
FRANCE

In re Application of GIRAUD et al
U.S. Application No.: 09/869,768
Int. Application No.: PCT/FR99/03317
Int. Filing Date: 30 December 1999
Priority Date: 31 December 1998
For: DISPENSER OF OBJECTS

Dear Jean-Pierre Giraud:

You are named as a joint inventor in the above-captioned United States national stage application, filed under the provisions of 37 CFR 1.47(a) and 35 U.S.C. 116. Should a patent be granted, you will be designated as an inventor.

As a named inventor, you are entitled to inspect any paper in the file wrapper of the application, order copies of all or any part thereof (at a prepaid cost set forth in 37 CFR 1.19) or to make your position of record in the application. Alternatively, you may arrange to do any of the preceding through a registered patent agent or attorney presenting written authorization from you. If you choose to join in the application, counsel of record (see below) would presumably assist you. Joining in the application would entail the filing of an appropriate oath or declaration by you pursuant to 37 CFR 1.63.

Bryan Tung
PCT Legal Examiner
PCT Legal Office
Telephone: 703-308-6614
Facsimile: 703-308-6459

Hueschen and Sage, PLLC
500 Columbia Plaza
350 East Michigan Avenue
Kalamazoo, MI 49007-3856

Attorney Docket No.: CR1PCT/lw

18 SEP 2002
UNITED STATES PATENT AND TRADEMARK OFFICE

#10

COMMISSIONER FOR PATENTS
UNITED STATES PATENT AND TRADEMARK OFFICE
WASHINGTON, D.C. 20231
www.uspto.gov

John F. Hoffman
Baker & Daniels
111 East Wayne Street
Suite 800
Fort Wayne, IN 46802

In re Application of KROTIL et al. Serial No.: 09/869,789 PCT No.: PCT/DE00/00003 Int. Filing Date: 04 January 2000 Priority Date: 05 January 1999 Attorney's Docket No.:TIL0004 For: METHOD AND DEVICE FOR SIMULTANEOUSLY DETERMINING THE ADHESION, FRICTION, AND OTHER MATERIAL PROPERTIES OF A SAMPLE SURFACE	DECISION ON PETITION UNDER 37 CFR 1.137(b)

The petition to revive under 37 CFR 1.137(b) filed 23 July 2002 in the above-captioned application is hereby **GRANTED** as follows:

Applicant's statement that "the entire delay in filing the required reply from the due date for the reply until the filing of a grantable petition under 37 CFR 1.137(b) was unintentional" meets the requirements of 37 CFR 1.137(b)(3).

A review of the application file reveals that the basic national fee of $860 has been paid. The required petition fee of $1280 has also been paid. The application went abandoned for failure to timely respond to the 05 February 2002 Notification of Defective Response. With their petition to revive, applicants responded to the Notification of Defective Response with the filing of an English translation of the International application. Thus, the requirements of 37 CFR 1.137(b) have been satisfied. Therefore, the request to revive the application abandoned under 35 U.S.C. 371(d) is granted as to the National stage in the United States of America.

This application is being forwarded to the National Stage Processing Division of the Office of PCT Operations for further processing. The 35 U.S.C. 371 date is **23 July 2002.**

Cynthia M. Kratz

Cynthia M. Kratz
Attorney Advisor
PCT Legal Office

Telephone: (703) 306-5467

04 FEB 2003

UNITED STATES PATENT AND TRADEMARK OFFICE

COMMISSIONER FOR PATENTS
UNITED STATES PATENT AND TRADEMARK OFFICE
WASHINGTON, D.C 20231
www.uspto.gov

Warner-Lambert Company
2800 Plymouth Road
Ann Arbor, MI 48105

In re Application of	:	
Barth et al	:	DECISION ON
Application No.: 09/869,871	:	
PCT No.: PCT/EP00/00340	:	REQUEST FOR
Int. Filing Date: 18 January 2000	:	
Priority Date: 09 February 1999	:	WITHDRAWAL OF
Attorney's Docket No.: 6381-08-IM	:	
For: METHOD FOR PRODUCING	:	ABANDONMENT UNDER
SYMMETRICAL AND ASYMMETRICAL	:	
CARBONATES	:	37 CFR 1.181

This Decision is in response to applicants "Petition Under 37 CFR 1.181 To Withdraw Holding of Abandonment" filed on 22 July 2002, which argues that the above-identified application was improperly held abandoned.

BACKGROUND

On 06 July 2001, applicant filed a Transmittal letter (Form PTO-1390) for entry into the national stage in the United States, which was accompanied by, a copy of the international application and an executed declaration. No translation of International Application into English was provided on such time.

On 22 August 2001, the United States Designated/Elected Office mailed a Notification of Missing Requirements under 35 U.S.C. 371 (Form PCT/DO/EO/905) indicating that a translation of the application into English must be furnished within the time period set forth. The notification set two months time limit or 32 months from the priority date for the application, whichever is later to respond.

On 03 June 2002, the DO/EO/US mailed a "NOTIFICATION OF ABANDONMENT" (Form PCT/DO/EO/909) which indicated that applicant had failed to respond to the "NOTIFICATION OF MISSING REQUIREMENTS (PCT/DO/EO/905), mailed 08/22/2001 within the time period set therein; accordingly, the application was abandoned.

In response to the "NOTIFICATION OF ABANDONMENT" mailed on 03 June 2002, petitioner has submitted the instant petition requesting withdrawal of the Notice of Abandonment. In support of the request, petitioner has provided a copy of the returned/stamped receipt card acknowledging a receipt date of 19 February 2002 and a "Response To Notice The Missing Parts Of Application Filing Date Granted (PTO-1533)" indicating a certificate of mailing on 23 October 2001.

DISCUSSION

The present petition was accompanied by a copy of the original postcard which was sent to the United States Designated/Elected Office (DO/EO/US). The postcard indicates an item received on 19 February 2002 was, *inter alia*, "A RESPONSE TO THE NOTICE OF MISSING REQUIREMENTS UNDER 35 U.S.C. 371, but there is no indication in the postcard that "a translation of the application into English" accompanied that submission. Applicant's representative states that the papers accompanying the present petition are copies of the papers that were sent to the Patent Office on 23 October 2001.

MPEP 503 provides:

> A postcard receipt which itemizes and properly identifies the papers which are being filed serves as *prima facie* evidence of receipt in the PTO of all the items listed thereon on the date stamped thereon by the PTO.

Applicant's postcard receipt serves as *prima facie* evidence of receipt of the listed item on 19 February 2002 by the USPTO.

Since the postcard is not itemized and does not list that the "translation of the application into English" in its contents of items sent on 23 October 2001, the "translation of the application into English " can not be considered as being simultaneously filed with the "RESPONSE TO THE NOTICE OF MISSING REQUIREMENTS UNDER 35 U.S.C. 371." Accordingly, the certificate of mailing under 37 CFR 1.8 is invalid for the "translation of the application into English," and can not be used as a basis for a timely filing date of 23 October 2001 for it.

Consequently, since the response for the Notice of Missing Parts, "translation of the application into English," was received on of 22 July 2002, as stamped by the USPTO; this is date of receipt at the USPTO. The response was untimely since it was received three months after the period stipulated with extensions of time, which expired on 04 April 2002.

In view of the above, the applicant's representative response- the translation received on 22 July 2002- is considered untimely. Consequently, the aforementioned application was properly abandoned.

Applicant may wish to consider filing a petition to revive the application under 37 CFR 1.137(b).

CONCLUSION

For reasons above, the petition under 37 CFR 1.181 is **DISMISSED**, without prejudice.

The application remains **ABANDONED**.

If reconsideration of the merits of the petition under 37 CFR 1.181 is desired or if applicant decides to file a petition to revive under 37 CFR 1.137(b), applicant must file such within **Two (2) MONTHS** from the mail date of this Decision.

Any further correspondence with respect to this matter should be addressed to the Assistant Commissioner for Patents, Box PCT, Washington, D.C. 20231, with the contents of the letter marked to the attention of the PCT Legal Office.

Rafael Bacares
PCT Legal Examiner
Work (703) 308-2260
Fax (703) 308-6459

Leonard Smith
PCT Legal Examiner
PCT Legal Affairs

0 9 JUN 2003

UNITED STATES PATENT and TRADEMARK OFFICE

#9

COMMISSIONER FOR PATENTS
UNITED STATES PATENT AND TRADEMARK OFFICE
P.O BOX 1450
ALEXANDRIA, VA 22313-1450
www.uspto.gov

Warner-Lambert Company
2800 Plymouth Road
Ann Arbor, MI 48105

In re Application of	:	
Barth et al	:	DECISION ON
Application No.: 09/869,871	:	
PCT No.: PCT/EP00/00340	:	
Int. Filing Date: 18 January 2000	:	PETITION UNDER
Priority Date: 09 February 1999	:	
Attorney's Docket No.: 6381-08-IM	:	
For: METHOD FOR PRODUCING	:	37 CFR 1.137(b)
SYMMETRICAL AND ASYMMETRICAL	:	
CARBONATES	:	

This decision is in response to applicants' "Petition Under 37 CFR 1.137(b) For Revival Of An Unintentionally Abandoned International Patent Application Designating the U.S.," filed on 02 April 2003.

BACKGROUND

In a decision from this Office on 04 February 2003, the petition filed on 22 July 2002 was dismissed. The decision stated that applicant's representative response- the translation received on 22 July 2002- was considered untimely, and the application was properly abandoned.

On 02 April 2003, applicants filed the instant petition under 37 CFR 1.137(b).

DISCUSSION

A grantable petition to revive an abandoned application under 37 CFR 1.137(b) must be accompanied by (1) the required reply, unless previously filed. In a nonprovisional application abandoned for failure to prosecute, the required reply may be met by the filing of a continuing application; (2) the petition fee as set forth in § 1.17(m); and (3) a statement that the entire delay in filing the required reply from the due date for the reply until the filing of a grantable petition pursuant to this paragraph was unintentional. The Commissioner may require additional information where there is a question whether the delay was unintentional; and (4) any terminal disclaimer (and fee as set forth in § 1.20 (d)) required pursuant to paragraph (c) of this section.

Petitioner has provided: (1) the proper reply by submitting the in the form of a translation of the application into English, (2) the petition fee set forth in §1.17(m) and (3) the proper statement under 137(b)(3). In this application, no terminal disclaimer is required.

Accordingly, the petition is deemed to satisfy requirements (1), (2), (3), and (4) under 37 CFR 1.137(b).

DECISION

The petition under 37 CFR 1.137(b) is **GRANTED**.

This application is being returned to the United States Designated/Elected Office (DO/EO/US) for continued processing. The 35 USC 371 date of this application is **22 July 2002.**

Rafael Bacares
PCT Legal Examiner
PCT Legal Office

Telephone: (703) 308-6312
Facsimile: (703) 308-6459

UNITED STATES PATENT AND TRADEMARK OFFICE

Commissioner for Patents
United States Patent and Trademark Office
P.O. Box 1450
Alexandria, VA 22313-1450
www.uspto.gov

MAYER, BROWN, ROWE & MAW LLP
1909 K STREET, N.W.
WASHINGTON DC 20006

COPY MAILED

MAR 0 8 2006

OFFICE OF PETITIONS

In re Patent No. 6,878,351	:	
Application No. 09/869,934	:	
Filed: July 9, 2001	:	ON PETITION
Issued: April 12, 2005	:	
Attorney Docket No. 118493-40281360	:	

This is a decision on the petition filed August 31, 2005, which is being treated as a request under 37 CFR 3.81[1] to correct the assignee on the front page of the above-identified patent by way of a Certificate of Correction.

The request under 37 CFR 3.81 is **GRANTED**.

Telephone inquiries should be directed to Petitions Examiner Liana Chase at (571) 272-3206. Any questions concerning the issuance of the Certificate of Correction should be directed to the Certificate of Corrections Branch at (703) 305-8309.

This matter is being referred to the Certificates of Correction Branch for issuance of the requested Certificate of Correction.

Frances Hicks
Petitions Examiner
Office of Petitions

[1] See Official Gazette of June 22, 2004

22 JUL 2002

UNITED STATES PATENT AND TRADEMARK OFFICE

Commissioner for Patents
United States Patent and Trademark Office
Washington, D.C. 20231
www.uspto.gov

Gerald h. Kiel, Esq.
Reed Smith LLP
375 Park Avenue
New York, NY 10152

In re Application of	:	
Ronald WENDENBURG et al	:	
Application No.: 09/869,951	:	DECISION ON
PCT No.: PCT/EP00/10808	:	
Int. Filing Date: 02 November 2000	:	PETITION
Priority Date: 10 November 1999	:	
Attorney Docket No.: GK-ZEI-3130	:	UNDER 37 CFR 1.182
For: SYSTEM FOR INTRODUCING OPTICAL	:	
TWEEZERS AND/OR A TREATMENT BEAM	:	
INTO A MICROSCOPE	:	

This decision is in response to applicants' "PETITION UNDER 37 C.F.R. 1.182 INVENTOR HAS CHANGED NAME AFTER FILING APPLICATION. MPEP 605.04(c)" filed on 07 May 2002. Applicant has been paid the petition fee of $130.00.

BACKGROUND

On a notification mailed by this Office on 08 April 2002, applicants' request for acceptance of the declaration was not acceptable. The notification stated the name of the second named inventor, Anja MICHELMANN, does not correspond to that set forth in the international application, Anja HOFFMANN.

On 07 May 2002, applicants' filed the instant petition, which includes an affidavit from Anja MICHELMANN describing the events which led to the name change. Also the papers included her signature with her former and current name.

DISCUSSION

MPEP § 605.04(c) requires in instances where an inventor has changed his or her name after the application has been filed to submit a petition under 37 CFR 1.182. The petition must include (1) the appropriate petition fee and (2) an affidavit signed with both names setting forth the procedure whereby the change of name was effected, or a certified copy of the court order.

With respect to item (1), the petition fee has been paid.

With respect to item (2), petitioner has provided with the petition her signature signed udner both names- Anja MICHELMANN, and Anja HOFFMANN, and setting forth the procedure whereby the change of name was effected. Therefore, item (2) has been satisfied.

CONCLUSION

For the reasons above, the petition the PETITION under 37 CFR 1.182 is **GRANTED**. The application will be granted a 35 U.S.C. 371 (c) date of **10 December 2001.**

For the reasons above, the application may enter into national stage processing at this time. The application is being returned to the International Division for processing as the U.S. National Stage of the above-identified international application.

Rafael Bacares
PCT Legal Examiner
PCT Legal Office

Leonard Smith
PCT Legal Examiner
PCT Legal Office

Telephone: (703) 308-6312
Facsimile: (703) 308-6459

This Page Is Inserted by IFW Operations
and is not a part of the Official Record

BEST AVAILABLE IMAGES

Defective images within this document are accurate representations of the original documents submitted by the applicant.

Defects in the images may include (but are not limited to):

- BLACK BORDERS
- TEXT CUT OFF AT TOP, BOTTOM OR SIDES
- FADED TEXT
- ILLEGIBLE TEXT
- SKEWED/SLANTED IMAGES
- COLORED PHOTOS
- BLACK OR VERY BLACK AND WHITE DARK PHOTOS
- GRAY SCALE DOCUMENTS

IMAGES ARE BEST AVAILABLE COPY.

As rescanning documents *will not* correct images, please do not report the images to the Image Problem Mailbox.

UNITED STATES PATENT AND TRADEMARK OFFICE

Under Secretary of Commerce for Intellectual Property and
Director of the United States Patent and Trademark Office
Washington, D.C. 20231
www.uspto.gov

Paper No. 13

OBLON, SPIVAK, MCCLELLAND, MAIRE &
NEUSTADT, P.C.
1940 DUKE STREET
ALEXANDRIA VA 22314

OIPE JC99
DEC 1 5 2003
PATENT & TRADEMARK OFFICE

COPY MAILED

FEB 1 3 2003

OFFICE OF PETITIONS

ON PETITION

In re Application of
Koichi Otsuki
Application No. 09/869,964
Filed: July 10, 2001
Attorney Docket No. 209854US2PCT

This is a decision on the petition, filed December 13, 2002, under 37 CFR 1.313(c)(2) to withdraw the above-identified application from issue after payment of the issue fee.

The petition is **GRANTED**.

The above-identified application is withdrawn from issue for consideration of a submission under 37 CFR 1.114 (request for continued examination). See 37 CFR 1.313(c)(2).

Petitioner is advised that the issue fee paid on October 3, 2002 in the above-identified application cannot be refunded. If, however, the above-identified application is again allowed, petitioner may request that it be applied towards the issue fee required by the new Notice of Allowance.[1]

Telephone inquiries should be directed to the undersigned at (703) 305-8859.

After receipt of the file in the Office of Petitions, the application will be forwarded to Technology Center AU 2853 for processing of the request for continued examination under 37 CFR 1.114.

Karen Creasy
Karen Creasy
Petitions Examiner
Office of Petitions
Office of the Deputy Commissioner
for Patent Examination Policy

RECEIVED: 2-19-03
OBLON, SPIVAK, McCLELLAND
MAIER & NEUSTADT, P.C.
DOCKETING DEPT.
Initials/Date Docketed: 2-19-03
Type of Resp(s):
Due Date(s):

[1] The request to apply the issue fee to the new Notice may be satisfied by completing and returning the new Issue Fee Transmittal Form PTOL-85(b), which includes the following language thereon: "Commissioner for Patents is requested to apply the Issue Fee and Publication Fee (if any) or re-apply any previously paid issue fee to the application identified above." Petitioner is advised that, whether a fee is indicated as being due or not, the Issue Fee Transmittal Form **must** be completed and timely submitted to avoid abandonment. Note the language in bold text on the first page of the Notice of Allowance and Fee(s) Due (PTOL-85).

UNITED STATES PATENT AND TRADEMARK OFFICE

UNDER SECRETARY OF COMMERCE FOR INTELLECTUAL PROPERTY AND
DIRECTOR OF THE UNITED STATES PATENT AND TRADEMARK OFFICE
WASHINGTON, DC 20231
www.uspto.gov

#16

APR 25 2003

In re Application of Kenneth L. Riley et al Serial Number: 09/869,981 Filed: January 14, 2000 For: TWO STAGE PROCESS FOR HYDRO-PROCESSING USING BULK MULTIMETALLIC CATALYST	:	WITHDRAWAL FROM ISSUE

The purpose of this communication is to inform you that the above-identified application is being withdrawn from issue pursuant to 37 CFR 1.313.

The application is being withdrawn to permit reopening of prosecution. The reasons therefor will be communicated to you by the examiner.

PTO records reveal that the issue fee has not been paid. If the issue fee has been submitted, the applicant may request a refund or may request that the fee be credited to a deposit account. However, applicant may wait until the application is either again found allowable or held abandoned. If the application is allowed, upon receipt of a new Notice of Allowance and Issue Fee Due, applicant may request that the previously submitted issue fee be applied toward payment of the issue fee in the amount identified on the new Notice of Allowance and Issue Fee Due. If the application is abandoned, applicant may request either a refund or a credit to a deposit account.

The application is being forwarded to the examiner for action.

Jacqueline M. Stone, Director
Technology Center 1700
Chemical and Materials Engineering

Gerard J. Hughes
ExxonMobil Research & Engineering Company
PO Box 900
Annandale, NJ 08801-0900

cc: Allowed Files, PK3-910

NOV 3 0 2001

UNITED STATES PATENT AND TRADEMARK OFFICE

Commissioner for Patents
United States Patent and Trademark Office
Washington, D.C. 20231
www.uspto.gov

Gerard J. Hughes
Exxonmobil Research And Engineering Company
P.O. Box 900
Annandale, N.J. 08801-0900

In re Application of:	
SOLED, Stuart, Leon, et al.	DECISION ON PETITION
U.S. Application No.: 09/869,984	TO REVIVE ABANDONED
PCT No.: PCT/US00/00993	APPLICATION UNDER 37
International Filing Date: 14 January 2000	CFR 1.137(b)
Priority Date: 15 January 1999	
Attorney's Docket No.: EL 751168052	
For: HYDORPROCESSING USING BULK GROUP VIII/GROUP VIB CATALYSTS	

The petition to revive under 37 CFR 1.137(b) filed 22 August 2001 in the above-captioned application is hereby **GRANTED** as follows:

Applicants' statement that the "the entire delay in filing the required reply from the due date for the required reply until the filing of a grantable petition under 37 CFR 1.137(b) was unintentional" meets the requirements of 37 CFR 1.137(b)(3).

Applicants have now submitted the basic national fee and the requirements of 37 CFR 1.137(b) have been satisfied. Therefore, the request to revive the application abandoned under 35 U.S.C. 371(d) is granted as to the national stage in the United States of America.

Applicant has also submitted an executed declaration in compliance with 37 CFR 1.497 and the surcharge for filing the declaration later than thirty months after the priority date.

This application is being returned to the National Stage Processing Division of the Office of PCT Operations for further processing in accordance with this decision. The 35 U.S.C. 371(c) date is **22 August 2001.**

Richard M. Ross
PCT Petitions Attorney
PCT Legal Office
Telephone: (703) 308-6155
Facsimile: (703) 308-6459

SEP 13 2001

UNITED STATES PATENT AND TRADEMARK OFFICE

#3

Commissioner for Patents
United States Patent and Trademark Office
Washington, D.C. 20231
www.uspto.gov

EXXONMOBIL RESEARCH AND ENGINEERING COMPANY
P.O. Box 900
Annandale, NJ 08801-0900

In re Application of
RILEY, Kenneth L. *et al*
Application No.: 09/869,985
PCT No.: PCT/US00/00992
Int. Filing Date: 14 January 2000
Priority Date: 15 January 1999
Attorney Docket No.: GJH-0006
For: PRODUCTION OF LOW SULFUR/LOW NITROGEN HYDROCRACKATES

DECISION

This decision is in response to the declaration filed with the national stage papers on 09 July 2001 which is treated as a submission under 37 CFR 1.42.

BACKGROUND

On 14 January 2000, applicants filed international application PCT/US00/00992 claiming priority to a United States patent application filed 15 January 1999.

On 14 August 2000, a Demand was filed with the International Preliminary Examination Authority electing the United States. The election was made prior to the expiration of 19 months from the priority date. Accordingly, the deadline for submission of a copy of the international application and payment of the basic national fee was extended to expire thirty months from the priority date, *i.e.*, 16 July 2001 (15 July 2001 was a Sunday).

On 09 July 2001, applicants filed a transmittal letter for entry into the national stage in the United States under 35 U.S.C. 371 which was accompanied by, *inter alia*, a declaration signed by three of the four co-inventors and Darlene Schuette as executrix for deceased co-inventor, William L. Schuette.

DISCUSSION

37 CFR 1.42 *When the Inventor is Dead*, states, in part:

> In case of the death of the inventor, the legal representative (executor, administrator, etc.) of the deceased inventor may make the necessary oath or declaration, and apply for and obtain the patent.

Here, applicants included a declaration signed by three of the four co-inventors and listing the other co-inventor, William Lee Schuette as deceased. The residence and citizenship of each co-inventor, including Mr. Schuette are listed on the declaration pursuant to 37 CFR 1.497(a)(3).

In addition, applicants included a page to the declaration titled "Added Page to declaration for Patent Application for Signature by Administrator (trix), Executor (trix) or Legal Representative on Behalf of Deceased or Incapacitated Inventor (37 C.F.R. §§ 1.42 and 1.43)" which was signed by Darlene Schuette as the executrix of the last will and testament of Mr. Schuette. The residence and citizenship of the executrix, Ms. Schuette are listed on this added page. Furthermore, since the residence of Ms. Schuette is listed as 9254 False River Road, New Roads, Louisiana, 70760, this has also been presumed to be the mailing address of Ms. Schuette as required by 37 CFR 1.497(b)(2). If this assumption is not correct, applicants must immediately notify the PCT Legal Office. For the reasons discussed above, the declaration complies with 37 CFR 1.497(a) & (b).

CONCLUSION

The papers filed under 37 CFR 1.42 are **ACCEPTED**.

Applicants have completed the requirements for acceptance under 35 U.S.C. § 371(c). The application has an international filing date of 14 January 2000, under 35 U.S.C. 363, and a 35 U.S.C. 371(c) date of **09 July 2001**.

This application is being forwarded to the United States Designated/Elected Office for further processing in accordance with this decision.

Boris Milef
PCT Legal Examiner
PCT Legal Office

James Thomson
Attorney Advisor
PCT Legal Office

Tel.: (703) 308-6457

09 AUG 2002

UNITED STATES PATENT AND TRADEMARK OFFICE

COMMISSIONER FOR PATENTS
UNITED STATES PATENT AND TRADEMARK OFFICE
WASHINGTON, D.C. 20231
www.uspto.gov

James H. Takemoto
ExxonMobil Research
and Engineering Company
P.O. Box 900
Annandale, NJ 08801-0900

In re Application of SOLED, Stuart L., et al. Application No.: 09/869,990 PCT No.: PCT/US00/01004 Int. Filing Date: 14 January 2000 Priority Date: 15 January 1999 Attorney Docket No.: JHT-0004 For: HYDROCRACKING PROCESS USING BULK GROUP VIII/GROUP VIB CATALYSTS	DECISION ON PETITION UNDER 37 CFR 1.137(b) AND REQUEST UNDER 37 CFR 1.42

Applicant's "Petition for Revival of an International Application for Patent Designating the U.S. Abandoned Unintentionally Under 37 CFR 1.137(b)" filed in the United States Patent and Trademark Office on 15 November 2001 is **GRANTED**. Additionally, the declaration submitted by applicant contains an indication that an inventor is deceased. This has been construed as a request for status under 37 CFR 1.42.

BACKGROUND

On 14 January 2000, applicant filed international application PCT/US00/01004, which claimed a priority date of 15 January 1999. A copy of the international application was communicated to the United States Patent and Trademark Office (USPTO) from the International Bureau on 20 July 2000. A Demand for international preliminary examination, in which the United States was elected, was filed on 14 August 2000, prior to the expiration of nineteen months from the priority date. Accordingly, the thirty-month period for paying the basic national fee in the United States expired at midnight on 15 July 2001.

On 09 July 2001, applicant filed a submission for entry into the national stage in the United States which was accompanied by, *inter alia*, a request to charge deposit account no. 05-1330 the amount of $1342 to cover the fees.

On 13 July 2001, a charge was attempted on the deposit account no. 05-1330, but the account contained insufficient funds.

On 07 September 2001, the Office mailed a Notification of Abandonment (Form PCT/DO/EO/909) noting that the application went abandoned as to the United States under 37 CFR 1.495 for failure to pay the basic national fee by thirty months.

On 05 October 2001, applicants submitted, *inter alia*, a transmittal letter and a declaration pursuant to 35 U.S.C. §371(c)(4).

On 15 November 2001, applicants submitted the instant petition.

On 05 December 2001, the Office mailed Communication indicating that the application remained abandoned, in response to the 05 October 2001 submission, but prior to the instant petition being matched with the application.

DISCUSSION

A petition to revive an abandoned application under 37 CFR 1.137(b) must be filed without intentional delay from the time the application became abandoned and/or applicant first became aware of the abandoned status of the application. A petition under 37 CFR 1.137(b) must be accompanied by (1) a statement that the entire delay in filing the required reply from the due date for reply until the filing of a grantable petition was unintentional, (2) a proposed response, (3) the petition fee required by law (37 CFR 1.17(m)), and (4) by a terminal disclaimer and fee (if the international application was filed prior to June 8, 1995).

Applicant states "the entire delay in filing the required reply from the due date for the required reply until the filing of a grantable petition under 37 CFR 1.137(b) was unintentional," as required by 37 CFR 1.137(b)(3). The appropriate basic national fee, and petition fee, processing fee for late filing of the oath or declaration have been submitted. A terminal disclosure is not required. Accordingly, all requirements under 37 CFR 1.137(b) have been satisfied.

Additionally, the declaration submitted on 05 October 2001 contained an indication that an inventor, William L. Schuette, was deceased. This indication has been construed as a request for status under 37 CFR 1.42. The declaration is signed by five inventors and the executrix of Mr. Schuette's estate, Darlene Schuette. The declaration lists the citizenship, address and residence of each of the inventors and of the legal representative and identifies Ms. Schuette as the executrix of Mr. Schuette's estate. As such, the declaration complies with 37 CFR 1.42 and 37 CFR 1.497(a)-(b).

CONCLUSION

The petition to revive the application abandoned under 37 CFR 1.137(b) is **GRANTED** as to the National Stage in the United States of America. The request for status under 37 CFR 1.42 is **GRANTED**.

The application has an international filing date of 14 January 2000 under 35 U.S.C. §363 and a date of **15 November 2001** under 35 U.S.C. §371. This application is being forwarded to the National Stage Processing Division of the Office of the PCT Operations for continued processing.

Leonard E. Smith
PCT Legal Examiner
PCT Legal Administration

Erin M. Pender
Attorney Advisor
PCT Legal Administration

Telephone: 703-305-0455
Facsimile: 703-308-6459

16 AUG 2002

UNITED STATES PATENT AND TRADEMARK OFFICE

COMMISSIONER FOR PATENTS
UNITED STATES PATENT AND TRADEMARK OFFICE
WASHINGTON, D.C. 20231
www.uspto.gov

James H. Takemoto
ExxonMobil Research
and Engineering Company
P.O. Box 900
Annandale, NJ 08801-0900

In re Application of SOLED, Stuart L., et al. Application No.: 09/869,990 PCT No.: PCT/US00/01004 Int. Filing Date: 14 January 2000 Priority Date: 15 January 1999 Attorney Docket No.: JHT-0004 For: HYDROCRACKING PROCESS USING BULK GROUP VIII/GROUP VIB CATALYSTS	DECISION ON PETITION UNDER 37 CFR 1.137(b) AND REQUEST UNDER 37 CFR 1.42

Applicant's "Petition for Revival of an International Application for Patent Designating the U.S. Abandoned Unintentionally Under 37 CFR 1.137(b)" filed in the United States Patent and Trademark Office on 15 November 2001 is **GRANTED**. Additionally, the declaration submitted by applicant contains an indication that an inventor is deceased. This has been construed as a request for status under 37 CFR 1.42.

BACKGROUND

On 14 January 2000, applicant filed international application PCT/US00/01004, which claimed a priority date of 15 January 1999. A copy of the international application was communicated to the United States Patent and Trademark Office (USPTO) from the International Bureau on 20 July 2000. A Demand for international preliminary examination, in which the United States was elected, was filed on 14 August 2000, prior to the expiration of nineteen months from the priority date. Accordingly, the thirty-month period for paying the basic national fee in the United States expired at midnight on 15 July 2001.

On 09 July 2001, applicant filed a submission for entry into the national stage in the United States which was accompanied by, *inter alia*, a request to charge deposit account no. 05-1330 the amount of $1342 to cover the fees.

On 13 July 2001, a charge was attempted on the deposit account no. 05-1330, but the account contained insufficient funds.

On 07 September 2001, the Office mailed a Notification of Abandonment (Form PCT/DO/EO/909) noting that the application went abandoned as to the United States under 37 CFR 1.495 for failure to pay the basic national fee by thirty months.

On 05 October 2001, applicants submitted, *inter alia*, a transmittal letter and a declaration pursuant to 35 U.S.C. §371(c)(4).

On 15 November 2001, applicants submitted the instant petition.

On 05 December 2001, the Office mailed Communication indicating that the application remained abandoned, in response to the 05 October 2001 submission, but prior to the instant petition being matched with the application.

DISCUSSION

A petition to revive an abandoned application under 37 CFR 1.137(b) must be filed without intentional delay from the time the application became abandoned and/or applicant first became aware of the abandoned status of the application. A petition under 37 CFR 1.137(b) must be accompanied by (1) a statement that the entire delay in filing the required reply from the due date for reply until the filing of a grantable petition was unintentional, (2) a proposed response, (3) the petition fee required by law (37 CFR 1.17(m)), and (4) by a terminal disclaimer and fee (if the international application was filed prior to June 8, 1995).

Applicant states "the entire delay in filing the required reply from the due date for the required reply until the filing of a grantable petition under 37 CFR 1.137(b) was unintentional," as required by 37 CFR 1.137(b)(3). The appropriate basic national fee, petition fee, and processing fee for late filing of the oath or declaration have been submitted. A terminal disclosure is not required. Accordingly, all requirements under 37 CFR 1.137(b) have been satisfied.

Additionally, the declaration submitted on 05 October 2001 contained an indication that an inventor, William L. Schuette, was deceased. This indication has been construed as a request for status under 37 CFR 1.42. The declaration is signed by five inventors and the executrix of Mr. Schuette's estate, Darlene Schuette. The declaration lists the citizenship, address and residence of each of the inventors and of the legal representative and identifies Ms. Schuette as the executrix of Mr. Schuette's estate. As such, the declaration complies with 37 CFR 1.42 and 37 CFR 1.497(a)-(b).

CONCLUSION

The petition to revive the application abandoned under 37 CFR 1.137(b) is **GRANTED** as to the National Stage in the United States of America. The request for status under 37 CFR 1.42 is **GRANTED**.

The application has an international filing date of 14 January 2000 under 35 U.S.C. §363 and a date of **15 November 2001** under 35 U.S.C. §371. This application is being forwarded to the National Stage Processing Division of the Office of the PCT Operations for continued processing.

Leonard E. Smith
PCT Legal Examiner
PCT Legal Administration

Erin M. Pender
Attorney Advisor
PCT Legal Administration

Telephone: 703-305-0455
Facsimile: 703-308-6459

UNITED STATES PATENT AND TRADEMARK OFFICE

Commissioner for Patents
United States Patent and Trademark Office
P.O. Box 1450
Alexandria, VA 22313-1450
www.uspto.gov

MCGINN INTELLECTUAL PROPERTY LAW GROUP, PLLC
8321 OLD COURTHOUSE ROAD
SUITE 200
VIENNA, VA 22182-3817

COPY MAILED
MAY 28 2008
OFFICE OF PETITIONS

In re Application of Kashima et al. :
Application No. 09/870,009 : Decision on Petition
Filing Date: May 30, 2001 :
Attorney Docket No. JP920000069US1 :

This is a decision on the petition under 37 CFR 1.181, filed January 25, 2008, to withdraw the holding of abandonment.

The petition is **granted.**

Facts:

On October 29, 2007, the Office mailed a decision by the Board of Patent Appeals and Interferences. The decision affirmed the rejection of all the claims under 35 U.S.C. 101.

A Request for Continued Examination and amendment were filed on Monday, December 31, 2007.

A Notice of Abandonment was mailed January 8, 2008. The Notice states the application is abandoned because the period for seeking court review of the Board decision has expired and none of the claims have been allowed.

Petitioner requests withdrawal of the holding of abandonment.

Discussion:

The filing of the Request for Continued Examination was sufficient to reopen prosecution and prevent the abandonment of the application.

Section XI(A) of MPEP 706.07(h) states,

> The filing of an RCE (accompanied by the fee and a submission) after a decision by the Board of Patent Appeals and Interferences, but before the filing of a Notice of Appeal to the Court of Appeals for the Federal Circuit (Federal Circuit) or the commencement of a civil action in federal district court, will also result in the finality of the rejection or

action being withdrawn and the submission being considered. Generally, the time period for filing a notice of appeal to the Federal Circuit or for commencing a civil action is within two months of the Board's decision. See 37 CFR 1.304 and MPEP § 1216. Thus, an RCE filed within this two month time period and before the filing of a notice of appeal to the Federal Circuit or the commencement of a civil action would be timely filed.

The Notice of Abandonment is hereby vacated and the holding of abandonment withdrawn.

Technology Center Art Unit 1631 will be informed of the instant decision and the application, including the RCE and amendment filed December 31, 2007, will be further examined in due course.

Telephone inquiries regarding this communication should be directed to Petitions Attorney Steven Brantley at (571) 272-3203.

Charles Steven Brantley
Senior Petitions Attorney
Office of Petitions

UNITED STATES PATENT AND TRADEMARK OFFICE

Commissioner for Patents
United States Patent and Trademark Office
P.O. Box 1450
Alexandria, VA 22313-1450
www.uspto.gov

Paper No. ____

JAMES B. MYERS JR.
WOODARD EMHARDT NAUGHTON MORIARTY & McNETT
BANK ONE CENTER TOWER
111 MONUMENT CIRCLE, SUITE 3700
INDIANAPOLIS, IN 46204-5137

COPY MAILED

MAY 0 3 2004

OFFICE OF PETITIONS

In re Application of	:
Charles L. Branch et al	:
Application No. 09/870,023	: DECISION GRANTING PETITION
Filed: May 30, 2001	: UNDER 37 CFR 313(c)(2)
Attorney Docket No. 4002-2533	:

This is a decision on the petition, filed March 19, 2004, under 37 CFR 1.313(c)(2) to withdraw the above-identified application from issue after payment of the issue fee.

The petition is **GRANTED**.

The above-identified application is withdrawn from issue for consideration of a submission under 37 CFR 1.114 (request for continued examination). See 37 CFR 1.313(c)(2).

Petitioner is advised that the issue fee paid on November 25, 2003 in the above-identified application cannot be refunded. If, however, the above-identified application is again allowed, petitioner may request that it be applied towards the issue fee required by the new Notice of Allowance.[1]

Telephone inquiries should be directed to the undersigned at (703) 305-8680.

Upon receipt of the file in the Office of Petitions, the file will be forwarded to Technology Center AU 3732 for processing of the request for continued examination under 37 CFR 1.114.

Frances Hicks

Frances Hicks
Petitions Examiner
Office of Petitions
Office of the Deputy Commissioner
for Patent Examination Policy

---

[1] The request to apply the issue fee to the new Notice may be satisfied by completing and returning the new Issue Fee Transmittal Form PTOL-85(b), which includes the following language thereon: "Commissioner for Patents is requested to apply the Issue Fee and Publication Fee (if any) or re-apply any previously paid issue fee to the application identified above." Petitioner is advised that, whether a fee is indicated as being due or not, the Issue Fee Transmittal Form **must** be completed and timely submitted to avoid abandonment. Note the language in bold text on the first page of the Notice of Allowance and Fee(s) Due (PTOL-85).

UNITED STATES PATENT AND TRADEMARK OFFICE

COMMISSIONER FOR PATENTS
UNITED STATES PATENT AND TRADEMARK OFFICE
P.O. BOX 1450
ALEXANDRIA, VA 22313-1450
www.uspto.gov

JAMES B. MYERS JR.
WOODARD, EMHARDT, NAUGHTON, MORIARTY & MCNETT
BANK ONE CENTER/TOWER
111 MONUMENT CIRCLE, SUITE 3700
INDIANAPOLIS, IN 46204-5137

COPY MAILED

AUG 2 4 2005

OFFICE OF PETITIONS

In re Application of	:	
Charles L. Branch, et al.	:	
Application No. 09/870,023	:	DECISION ON PETITION
Filed: May 30, 2001	:	UNDER 37 CFR 1.78(a)(3)
Attorney Docket No. 4002-2533	:	

This is a decision in response to the petition under 37 CFR 1.78(a)(3) to accept an unintentionally delayed claim under 35 U.S.C. §120 for the benefit of a prior-filed nonprovisional application No. 09/701,933.

The petition is **GRANTED**.

A petition for acceptance of a claim for late priority under 37 CFR 1.78(a)(3) is only applicable to those applications filed on or after November 29, 2000. Further, the petition is appropriate only after the expiration of the period specified in 37 CFR 1.78(a)(2)(ii). In addition, the petition under 37 CFR 1.78(a)(3) must be accompanied by:

> **(1)** the reference required by 35 U.S.C. § 120 and 37 CFR 1.78(a)(2)(i) of the prior-filed application(s), unless previously submitted;[1]
> **(2)** the surcharge set forth in § 1.17(t); and

[1] Any nonprovisional application or international application designating the United States of America claiming the benefit of one or more prior-filed copending applications or international applications designating the United States of America must contain or be amended to contain a reference (amendment to the first line of the specification following the title or in an application data sheet (ADS) to each such prior-filed application, identifying it by application number (consisting of the series code and serial number) or international application number and international filing date filing date and indicating the relationship of the applications. Cross references to other related applications may be made when appropriate (*see* § 1.14).

(3) a statement that the entire delay between the date the claim was due under 37 CFR 1.78(a)(2)(ii) and the date the claim was filed was unintentional. The Commissioner may require additional information where there is a question whether the delay was unintentional.

The petition satisfies all of the above requirements.

A corrected Filing Receipt, which includes the priority claim to the prior-filed nonprovisional application, accompanies this decision on petition.

The granting of the petition to accept the delayed benefit claim to the prior-filed application(s) under 37 CFR 1.78(a)(3) should not be construed as meaning that the application is entitled to the benefit of the prior-filed application(s). In order for the instant application to be entitled to the benefit of the prior-filed application(s), all other requirements under 35 U.S.C. § 120 and 37 CFR 1.78(a)(1) and (a)(2) must be met. Similarly, the fact that the corrected Filing Receipt accompanying this decision on petition includes the prior-filed application should not be construed as meaning that applicant is entitled to the claim for benefit of priority to the prior-filed application noted thereon. Accordingly, the examiner will, in due course, consider this benefit claim and determine whether the application is entitled to the benefit of the earlier filing date.

This application is being referred to Technology Center Art Unit 3732 for consideration by the Examiner of the amendment filed December 6, 2004, including applicant's claim under 35 U.S.C. §120 and 37 CFR 1.78(a)(1) and (2) for the benefit of priority to the prior-filed nonprovisional application No. 09/703,933.

Telephone inquiries related to this decision should be directed to Sherry D. Brinkley at (571) 272-3204.

Sherry D. Brinkley
Petitions Examiner
Office of Petitions
Office of the Deputy Commissioner
for Patent Examination Policy

Frances M. Hicks
Lead, Petitions Examiner
Office of Petitions
Office of the Deputy Commissioner
for Patent Examination Policy

Attachment: Corrected Filing Receipt

UNITED STATES PATENT AND TRADEMARK OFFICE

Commissioner for Patents
United States Patent and Trademark Office
P.O. Box 1450
Alexandria, VA 22313-1450
www.uspto.gov

HOWARD M. PETERS
PETERS, VERNY, JONES & SCHMITT, L.L.P
425 SHERMAN AVENUE, SUITE 230
PALO ALTO, CA 94306

COPY MAILED

FEB 0 1 2006

OFFICE OF PETITIONS

In re Application of	:	
Wang, Jinhai	:	DECISION ON PETITION
Application No. 09/870,027	:	TO WITHDRAW
Filed: May 29, 2001	:	FROM RECORD
Attorney Docket No. 3586.04-1	:	

This is a decision on the Request to Withdraw as attorney or agent of record under 37 C.F.R. § 1.36(b), filed November 18, 2005.

The request is **APPROVED**.

A grantable request to withdraw as attorney/agent of record must be signed by every attorney/agent seeking to withdraw or contain a clear indication that one attorney is signing on behalf of another/others. A request to withdraw will not be approved unless at least 30 (thirty) days would remain between the date of approval and the later of the expiration date of a time to file a response or the expiration date of the maximum time period which can be extended under 37 C.F.R. § 1.136(a).

The request was signed by Howard M. Peters, Hana Verny, Allston Jones, Susan M. Schmitt, and David J. Aston.

The above listed attorneys have been withdrawn as attorneys or agents of record. Applicant is reminded that that a new attorney of record has not been appointed at this time.

The correspondence address of record has been changed and the new correspondence address is the address indicated below.

The application became abandoned for failure to timely pay the issue fee and publication fee indicated in the Notice of Allowance and Fee(s) Due mailed July 15, 2005.

Telephone inquires concerning this decision should be directed to Petitions Examiner Liana Chase at (571) 272-3206. All other inquires concerning either the examination or status of the application should be directed to the Technology Center.

David Bucci
Petitions Examiner
Office of Petitions

Cc: PETER GLUCK
GREENBERG TRAURIG, LLP
650 TOWN CENTER DRIVE, SUITE 1700
COSTA MESA, CA 92626

UNITED STATES PATENT AND TRADEMARK OFFICE

COMMISSIONER FOR PATEN
UNITED STATES PATENT AND TRADEMARK OFFI
WASHINGTON, D.C. 2023
www.uspto.g

Paper No. 5

MAIL

MAY 2 8 2003

DIRECTOR OFFICE
TECHNOLOGY CENTER 2100

Leah Sherry
OPPENHEIMER WOLFF & DONNELLY LLP
1400 Page Mill Road
Palo Alto, CA 94304-1124

In re Application of:	)	
Seagren	)	
Application No. 09/870,029	)	**DECISION ON REQUEST FOR**
Filed: May 30, 2001	)	**WITHDRAWAL AS ATTORNEY**
For: SCALABLE JAVA SERVERS FOR NETWORK SERVER APPLICATIONS	)	

This is a decision on the Request To Withdraw from Representation filed May 16, 2003.

A grantable request to withdraw as attorney of record should indicate thereon the present mailing addresses of the attorney(s) who is/are withdrawing from the record and of the applicant. The request for withdrawal must be signed by every attorney seeking to withdraw or contain a clear indication that one attorney is signing on behalf of another/others. A request to withdraw will not be approved unless at least 30 (thirty) days would remain between the date of approval and the later of the expiration date of a time to file a response or the expiration date of the maximum time period which can be extended under 37 C.F.R. § 1. 136(a). The effective date of withdrawal being the date of decision and not the date of request. See M.P.E.P. § 402.06. 37 C.F.R. § 1.36 further requires that the applicant or patent owner be notified of the withdrawal of the attorney or agent.

The request filed May 16, 2003 meets all the requirements. Accordingly the request is **GRANTED**.

All future communications from the Office will be directed to the below-listed address until otherwise notified by applicant. This correspondence address is provided by the withdrawn attorney(s). Applicant is reminded of the obligation to promptly notify the Patent and Trademark Office (Office) of any change in correspondence address to ensure receipt of all communications from the Office.

James R. Matthews

For Vincent N. Trans
Special Programs Examiner
Technology Center 2100
Computer Architecture and Software
(703) 305-9750

cc: Bill Streeter
HEWLETT-PACKARD COMPANY
Intellectual Property Administration
P.O. Box 272400
Fort Collins, CO 80527-2400

UNITED STATES PATENT AND TRADEMARK OFFICE

COMMISSIONER FOR PATENTS
UNITED STATES PATENT AND TRADEMARK OFFICE
WASHINGTON, D.C. 20231
www.uspto.gov

Paper No. 7

NOVAKOV DAVIS & MUNCK
A PROFESSIONAL CORPORATION
900 THREE GALLERIA TOWER
13155 NOEL ROAD
DALLAS, TX 75240

COPY MAILED

MAY 1 5 2002

OFFICE OF PETITIONS

In re Application of:	:	
Cristian Tabacutu	:	
Application No. 09/870,039	:	DECISION GRANTING STATUS
Filed: May 30, 2001	:	UNDER 37 CFR 1.47(b)
Attorney Dckt No. NC25779	:	

This is a decision on the Request for Petition under 37 CFR 1.47(b), filed February 14, 2002, to allow the assignee to proceed with the application on behalf of and as agent for the inventor.

The petition is **granted**.

The above-identified application and papers have been reviewed and found in compliance with 37 CFR 1.47(b). This application is hereby accorded Rule 1.47(b) status.

Petitioner has demonstrated that the non-signing inventor refuses to sign the application. Specifically, Petitioner established that the nonsigning inventor, Cristian Tabacutu, refuses to sign the declaration after being sent a copy of the above-identified application and declaration.

As provided in Rule 1.47(b), this Office will forward notice of this application's filing to the non-signing inventor at the address given in the petition. Notice of the filing of this application will also be published in the Official Gazette.

The application file is being forwarded to the Office of Initial Patent Examination for continued processing.

Telephone inquiries regarding this communication should be directed to Petitions Attorney Derek L. Woods at (703) 305-0014.

Beverly M. Flanagan
Supervisory Petitions Examiner
Office of Petitions
Office of the Deputy Commissioner
for Patent Examination Policy

UNITED STATES PATENT AND TRADEMARK OFFICE

COMMISSIONER FOR PATENTS
UNITED STATES PATENT AND TRADEMARK OFFICE
WASHINGTON, D.C. 20231
www.uspto.gov

Mr. Cristian Tabacutu
302-1021 Fourth Avenue
New Westminster, B.C. V3M 1T3

COPY MAILED
MAY 15 2002
OFFICE OF PETITIONS

In re Application of: :
Cristian Tabacutu :
Application No. 09/870,039 :
Filed: May 30, 2001 :
Attorney Dckt No. NC25779 : LETTER

Dear Mr. Tabacutu:

You are named as inventor in the above-identified United States patent application filed under the provisions of 35 U.S.C. 116 (United States Code) and 37 CFR 1.47(b), Rules of Practice in Patent Cases. Should a patent be granted on the application you will be designated therein as the inventor.

As the named inventor you are entitled to inspect any paper in the file wrapper of the application, order copies of all or any part thereof (at a prepaid cost per 37 CFR 1.19) or make your position of record in the application. Alternatively, you may arrange to do any of the preceding through a registered patent attorney or agent presenting written authorization from you. If you care to join the application, counsel of record (see below) would presumably assist you. Joining in the application would entail the filing of an appropriate oath or declaration by you pursuant to 37 CFR 1.63.

Telephone inquiries regarding this communication should be directed to Petitions Attorney Derek L. Woods at (703) 305-0014. Requests for information regarding your application should be directed to the File Information Unit at (703) 308-2733. Information regarding how to pay for and order a copy of the application, or a specific paper in the application, should be
directed to Certification Division at (703) 308-9726 or
1-800-972-6382 (outside the Washington D.C. area).

Beverly M. Flanagan
Supervisory Petitions Examiner
Office of Petitions
Office of the Deputy Commissioner
for Patent Examination Policy

cc: NOVAKOV DAVIS & MUNCK
A PROFESSIONAL CORPORATION
900 THREE GALLERIA TOWER
13155 NOEL ROAD
DALLAS, TX 75240

UNITED STATES PATENT AND TRADEMARK OFFICE

Commissioner for Patents
United States Patent and Trademark Office
P.O. Box 1450
Alexandria, VA 22313-1450
www.uspto.gov

Paper No.

Brinks Hofer Gilson & Lione
P.O. Box 10395
Chicago, IL 60610

COPY MAILED

JAN 24 2005

OFFICE OF PETITIONS

In re Application of Suzuki et al. Application No. 09/870,041 Filed: May 30, 2001 Atty Docket No. 9281-3981	: : : : :	DECISION ON APPLICATION FOR PATENT TERM ADJUSTMENT

This is a decision on the "REQUEST FOR RECONSIDERATION OF PATENT TERM ADJUSTMENT UNDER 37 C.F.R. § 1.705(d)," filed September 20, 2004. Based on a projected pate grant of January 25, 2005, applicants request that the patent term adjustment be increased by at least 33 days for the Office taking in excess of three years to issue the patent.

The instant application for patent term adjustment requests reconsideration of the patent term adjustment as it relates to the Office's failure to issue the patent within 3 years of the filing date. A decision is being **held in abeyance** until after the actual patent date. Knowledge of the actual date the patent issues is required to calculate the amount, if any, of additional patent term patentee is entitled to for Office failure to issue the patent within 3 years. See § 1.703(b).

Patentees are given **TWO (2) MONTHS** from the issue date of the patent to file a written request for reconsideration of the patent term adjustment for Office failure to issue the patent within 3 years. A copy of this decision should accompany the request. Patentees may seek such consideration without payment of an additional fee. However, as to all other bases for seeking reconsideration of the patent term adjustment indicated in the patent, all requirements of § 1.705(d) must be met. Requests for reconsideration on other bases must be timely filed and must include payment of the required fee.

Petitioner is reminded that if an application is entitled to an adjustment under 35 U.S.C. 154(b)(1)(B), the entire period during which the application (except for periods excluded under 35 U.S.C. 154(b)(1)(B)(i)-(iii)), and not just the period beginning three years after the actual filing date of the application, is the period of delay under 35 U.S.C. 154(b)(1)(B) in determining whether periods of delay overlap under 35 U.S.C. 154(b)(2)(A). Thus, any days of delay for Office issuance of the patent more than 3 years after the filing date of the application which overlap with the days of patent term adjustment accorded prior to the issuance of the patent will not result in any additional

patent term adjustment. See 35 U.S.C. 154(b)(1)(B), 35 U.S.C. 154(b)(2)(A), and 37 CFR § 1.703(f). See also *Revision of Patent Term Extension and Patent Term Adjustment Provisions; Final Rule*, 69 Fed. Reg. 21704 (April 22, 2004).

The Office acknowledges submission of the $200.00 fee set forth in 37 CFR 1.18(e). No additional fees are required.

The application file is being forwarded to the Office of Patent Publication for issuance of the patent.

Telephone inquiries specific to this matter should be directed to Nancy Johnson, Senior Petitions Attorney, at (571) 272-3219.

Karin Ferriter
Senior Legal Advisor
Office of Patent Legal Administration
Office of Deputy Commissioner
for Patent Examination Policy

UNITED STATES PATENT AND TRADEMARK OFFICE

COMMISSIONER FOR PATENTS
UNITED STATES PATENT AND TRADEMARK OFFICE
P.O. BOX 1450
ALEXANDRIA, VA 22313-1450
www.uspto.gov

Crustinger & Booth
1601 Elm Street
Suite 1950
Dallas, TX 75201-4744

COPY MAILED

MAR 1 4 2005

OFFICE OF PETITIONS

In re Application of	:	
Charles D. Harris	:	
Application No. 09/870,078	:	ON PETITION
Filed: May 30, 2001	:	
Attorney Docket No. RIAL 18420	:	

This is a decision on the petition under 37 CFR 1.137(b), filed August 31, 2004, to revive the above-identified application.

The petition is **GRANTED**.

Telephone inquiries concerning this decision should be directed to the undersigned at (571) 272-3223.

The application file is being referred to Technology Center 3700.

Marianne E. Jenkins
Petitions Examiner
Office of Petitions
Office of the Deputy Commissioner
for Patent Examination Policy

UNITED STATES PATENT AND TRADEMARK OFFICE

COMMISSIONER FOR PATENTS
UNITED STATES PATENT AND TRADEMARK OFFICE
P.O. BOX 1450
ALEXANDRIA, VA 22313-1450
WWW.USPTO.GOV

Paper No. 15

SCHWEGMAN, LUNDBERG, WOESSNER & KLUTH, P.A.
P.O. BOX 2938
MINNEAPOLIS MN 55402

COPY MAILED

JUL 1 6 2003

OFFICE OF PETITIONS

In re Application of
Paul Patrick Cleary et al
Application No. 09/870,122
Filed: May 30, 2001
Attorney Docket No. 600.450US2

DECISION ON PETITION
UNDER 37 CFR 1.78(a)(3)

This is a decision on the petition under 37 CFR 1.78(a)(3), filed March 4, 2003, to accept an unintentionally delayed claim under 35 U.S.C. §120 for the benefit of prior-filed nonprovisional Application No. 09/206,898, set forth in the amendment filed concurrently with the instant petition.

The petition is **DISMISSED**.

A petition for acceptance of a claim for late priority under 37 CFR 1.78(a)(3) is only applicable to those applications filed on or after November 29, 2000. Further, the petition is appropriate only after the expiration of the period specified in 37 CFR 1.78(a)(2)(ii). In addition, the petition under 37 CFR 1.78(a)(3) must be accompanied by:

> **(1)** the reference required by 35 U.S.C. § 120 and 37 CFR 1.78(a)(2)(i) of the prior-filed application, unless previously submitted;[1]
> **(2)** the surcharge set forth in § 1.17(t); and
> **(3)** a statement that the entire delay between the date the claim was due under 37 CFR 1.78(a)(2)(ii) and the date the claim was filed was unintentional. The Commissioner may require additional information where there is a question whether the delay was unintentional.

---

[1] Any nonprovisional application or international application designating the United States of America claiming the benefit of one or more prior-filed copending applications or international applications designating the United States of America must contain or be amended to contain a reference (amendment to the first line of the specification following the title or in an application data sheet (ADS)) to each such prior-filed application, identifying it by application number (consisting of the series code and serial number) or international application number and international filing date filing date and indicating the relationship of the applications. Cross references to other related applications may be made when appropriate (*see* § 1.14).

The instant application was filed on May 30, 2001 and was pending at the time of filing of the instant petition.

The reference to the prior-filed application was not included in the manner specified in 37 CFR 1.78(a)(2)(i) (i.e., in an ADS or in an amendment to the first sentence following the title of the specification) or filed within the period specified in 37 CFR 1.78(a)(2)(ii).

The instant petition does not comply with item (1)

37 CFR 1.78(a)(2)(i) requires that any nonprovisional application claiming the benefit of one or more prior-filed copending nonprovisional applications must contain or be amended to contain a reference to each such prior-filed application, identifying it by application number (consisting of the series code and serial number) and indicating the relationship of the applications. The relationship between the applications is whether the subject application is a continuation, divisional, or continuation-in-part of a prior-filed nonprovisional application. An example of a proper benefit claim is: "This application is a continuation of Application No. 10/---, filed---." A benefit claim that merely states: "This application claims the benefit of Application No. 10/---, filed---," does not comply with 37 CFR 1.72(a)(2)(i) since the proper relationship, which includes the type of continuing application, is not stated. Also, the status of each nonprovisional parent application (if it is patented or abandoned) should also be indicated, following the filing date of the parent nonprovisional application. See Manual of Patent Examining Procedure, 8th ed., August 2001), Section 201.11, Reference to First Application. The amendment filed March 4, 2003 fails to state the relationship of Application No. 09/206,898, filed December 7, 1998, to the PCT application; ie., continuation, division or CIP.

For the above-noted reason, the petition under 37 CFR 1.78(a)(3) cannot be granted.

In order to expedite consideration, petitioner may wish to submit the substitute amendment and the renewed petition by facsimile transmission to the number indicated below and to the attention of Karen Creasy **.**

Further correspondence with respect to this matter should be addressed as follows:

By mail: Mail Stop PETITION
Commissioner for Patents
Post Office Box 1450
Alexandria VA 22313-1450

By FAX: (703) 308-6916
Attn: Office of Petitions

By hand: Crystal Plaza Four, Suite 3C23
2201 South Clark Place
Arlington, VA 22202

Any questions concerning this matter may be directed to Karen Creasy at (703) 305-8859.

Frances Hicks

Frances Hicks
Lead Petitions Examiner
Office of Petitions
Office of the Deputy Commissioner
for Patent Examination Policy

UNITED STATES PATENT AND TRADEMARK OFFICE

COMMISSIONER FOR PATENTS
UNITED STATES PATENT AND TRADEMARK OFFICE
P.O. BOX 1450
ALEXANDRIA, VA 22313-1450
WWW.USPTO.GOV

Paper No. 18

SCHWEGMAN, LUNDBERG, WOESSNER & KLUTH, P.A.
P.O. BOX 2938
MINNEAPOLIS MN 55402

COPY MAILED

AUG 05 2003

OFFICE OF PETITIONS

In re Application of
Paul Patrick Cleary et al
Application No. 09/870,122
Filed: May 30, 2001
Attorney Docket No. 600.450US2

: DECISION ON PETITION
: UNDER 37 CFR 1.78(a)(3)

This is a decision on the renewed petition under 37 CFR 1.78(a)(3), filed by facsimile transmission on July 31, 2003, to accept an unintentionally delayed claim under 35 U.S.C. § 120 for the benefit of priority to prior-filed nonprovisional Application No. 09/206,898, filed December 7, 1998, set forth in the amendment filed concurrently with the instant petition.

The petition is **GRANTED**.

A petition for acceptance of a claim for late priority under 37 CFR 1.78(a)(3) is only applicable to those applications filed on or after November 29, 2000. Further, the petition is appropriate only after the expiration of the period specified in 37 CFR 1.78(a)(2)(ii). In addition, the petition under 37 CFR 1.78(a)(3) must be accompanied by:

> **(1)** the reference required by 35 U.S.C. § 120 and 37 CFR 1.78(a)(2)(i) of the prior-filed application, unless previously submitted;[1]
> **(2)** the surcharge set forth in § 1.17(t); and
> **(3)** a statement that the entire delay between the date the claim was due under 37 CFR 1.78(a)(2)(ii) and the date the claim was filed was unintentional. The Commissioner may require additional information where there is a question whether the delay was unintentional.

The instant pending application was filed on May 30, 2001, and was pending at the time of filing of the instant petition. A reference to the prior-filed nonprovisional application has been included in an amendment to the first sentence of the specification following the title, as required by 37 CFR 1.78(a)(2)(iii).

---

[1] Any nonprovisional application or international application designating the United States of America claiming the benefit of one or more prior-filed copending applications or international applications designating the United States of America must contain or be amended to contain a reference (amendment to the first line of the specification following the title or in an application data sheet (ADS) to each such prior-filed application, identifying it by application number (consisting of the series code and serial number) or international application number and international filing date filing date and indicating the relationship of the applications. Cross references to other related applications may be made when appropriate (*see* § 1.14).

The instant nonprovisional application was filed after November 29, 2000, and the claim herein for the benefit of priority to the prior-filed nonprovisional application is submitted after expiration of the period specified in 37 CFR 1.78(a)(2)(ii). Also, the reference to the prior-filed nonprovisional application was submitted during the pendency of the instant nonprovisional application, for which the claim for benefit of priority is sought. *See* 35 U.S.C. § 120. Accordingly, having found that the instant petition for acceptance of an unintentionally delayed claim for the benefit of priority under 35 U.S.C. § 120 to the prior-filed nonprovisional application satisfies the conditions of 37 CFR 1.78(a)(3), the petition is granted.

The granting of the petition to accept the delayed benefit claim to the prior-filed application under 37 CFR 1.78(a)(3) should not be construed as meaning that the instant application is entitled to the benefit of the prior-filed application. In order for the instant application to be entitled to the benefit of the prior-filed application, all other requirements under 35 U.S.C. § 120 and 37 CFR 1.78(a)(1) and (a)(2) must be met. Similarly, the fact that the corrected Filing Receipt accompanying this decision on petition includes the prior-filed application should not be construed as meaning that applicant is entitled to the claim for benefit of priority to the prior-filed application noted thereon. Accordingly, the examiner will, in due course, consider this benefit claim and determine whether the instant application is entitled to the benefit of the earlier filing date.

A corrected Filing Receipt, which includes the priority claim to the prior-filed nonprovisional application, accompanies this decision on petition.

Any inquiries concerning this decision may be directed to Karen Creasy at (703) 305-8859.

This application is being forwarded to Technology Center Art Unit 1645 for consideration by the examiner of applicant's entitlement to claim benefit of priority under 35 U.S.C. § 120 to prior-filed nonprovisional Application No. 09/206,898, filed December 7, 1998 which issued as Patent No. 6,355,255 on March 12, 2002.

Frances Hicks

Frances Hicks
Lead Petitions Examiner
Office of Petitions
Office of the Deputy Commissioner
for Patent Examination Policy

ATTACHMENT: Corrected Filing Receipt

UNITED STATES PATENT AND TRADEMARK OFFICE

Commissioner for Patents
United States Patent and Trademark Office
P.O. Box 1450
Alexandria, VA 22313-1450
www.uspto.gov

Paper No. 11

DOROTHY R. AUTH
MORGAN & FINNEGAN , L.L.P.
345 PARK AVENUE
NEW YORK, NY 10154

COPY MAILED
JUN 2 5 2004
OFFICE OF PETITIONS

In re Application of	:	
Ihle, et al.	:	
Application No. 09/870,128	:	ON PETITION
Filed: May 30, 2001	:	
Attorney Docket No. 4290-4000	:	

This is a decision on the petition under 37 CFR 1.137(b), filed March 2, 2004, to revive the above-identified application.

The petition is **GRANTED**.

The above-identified application became abandoned for failure to reply in a timely manner to the Notice to File Missing Parts of Application (Notice) mailed August 3, 2001. The Notice set a period for reply of two (2) months from the mail date of the Notice. No extensions of time under the provisions of 37 CFR 1.136(a) were obtained. Accordingly, the above-identified application became abandoned on October 4, 2001. A Notice of Abandonment was mailed on June 2, 2004.

The file is being forwarded to the Office of Initial Patent Examination for further processing.

Telephone inquiries concerning this matter may be directed to the undersigned at (703) 306-9200.

Edward J. Tannouse
Petitions Attorney
Office of Petitions
United States Patent and Trademark Office

UNITED STATES PATENT AND TRADEMARK OFFICE

COMMISSIONER FOR PATENTS
UNITED STATES PATENT AND TRADEMARK OFFICE
P.O. BOX 1450
ALEXANDRIA, VA 22313-1450
www.uspto.gov

NOV - 6 2003

Paper No. 18

In re Application of
Christopher C.N. Callow
Application No. 09/870,135
Filed: May 30, 2001
Attorney Docket No. 056848-5033

: DECISION ON PETITION

This is a decision on the petition filed on October 22, 2003 by which petitioner requests withdrawal of the examiner's holding that this application stands abandoned for failure to file a proper and timely reply to the final Office action dated February 21, 2003. The petition is considered pursuant to 37 CFR 1.181, and no fee is required.

The petition is granted.

Petitioner alleges that the application is not abandoned because petitioner timely filed a Request for Examination (RCE) and extension of time. In support of this allegation, petitioner has supplied a copy of the RCE and extension of time request, together with a post card receipt showing that these papers were in fact received in the Office on June 23, 2003. This date is within the period set for reply in the final Office action, as extended by one month. It is also noted that Office financial records show that the requisite RCE and extension fees were received by the Office on June 23, 2003.

Based upon the evidence, it is clear that this application is not in fact abandoned. Accordingly, the Notice of Abandonment is hereby vacated, the holding of abandonment is withdrawn, and the application is restored to pending status. The application is being forwarded to the Head Supervisory Applications Examiner for entry of the RCE, extension and entry of the amendment after final action as requested in the RCE. Thereafter, the application will be forwarded to the examiner for appropriate action on the reply filed on June 23, 2003.

PETITION GRANTED.

E. Rollins-Cross, Director, Patent
Examining Groups 3710 and 3720

Morgan Lewis & Bockius LLP
1111 Pennsylvania Avenue NW
Washington, DC 20004

UNITED STATES PATENT AND TRADEMARK OFFICE

Commissioner for Patents
United States Patent and Trademark Office
P.O. Box 1450
Alexandria, VA 22313-1450
www.uspto.gov

MORGAN LEWIS & BOCKIUS LLP
1111 PENNSYLVANIA AVENUE
WASHINGTON, DC 20004

COPY MAILED

APR 0 5 2006

OFFICE OF PETITIONS

In re Application of :
Callow :
Application No. 09/870,135 :
Filed: May 30, 2001 :
Attorney Docket No. 056848-5003 :

DECISION ON PETITION

This is a decision on the petition under 37 CFR 1.181, filed on March 10, 2006, to withdraw the holding of abandonment.

On January 14, 2004, the Office mailed a nonfinal Office action, which set a three-month shortened statutory period to reply. In the apparent absence of a timely response, the application became abandoned on April 15, 2004. On February 24, 2006, the Office mailed a Notice of Abandonment.

Petitioner asserts that a proper response was filed timely. In support of the petition, petitioner submits a copy of a returned, date-stamped postcard receipt, acknowledging receipt of an Amendment Transmittal Form and an Amendment in the USPTO on April 12, 2004. A copy of the response is included with this petition.

The Office has not located the original correspondence. Section 503 of the MPEP states, "[a] post card receipt which itemizes and properly identifies the papers which are being filed serves as *prima facie* evidence of receipt in the USPTO of all the items listed thereon on the date stamped thereon by the USPTO." Accordingly, it is concluded that the response was filed timely in the USPTO on April 12, 2004, but was not matched with the application.

For the reasons stated above, the petition is **granted**. The Notice of Abandonment is hereby vacated and the holding of abandonment is withdrawn. The application will be returned to its pending status.

This matter is being referred to Technology Center Art Unit 3724.

Telephone inquiries specifically concerning this decision should be directed to the undersigned at (571) 272-3211. All other inquiries concerning either the examination procedures or status of the application should be directed to the Technology Center.

Christina Tartera Donnell

Christina Tartera Donnell
Senior Petitions Attorney
Office of Petitions

UNITED STATES PATENT AND TRADEMARK OFFICE

Commissioner for Patents
United States Patent and Trademark Office
Washington, D.C. 20231
www.uspto.gov

Paper No. 8

Kirton & McConkie
1800 Eagle Gate Tower
60 East South Temple Street
Salt Lake City, Utah 84111

COPY MAILED

NOV 0 4 2002

OFFICE OF PETITIONS

In re Application of	:	
Chris Maier et al.	:	
Application No. 09/870,156	:	ON PETITION
Filed: May 30, 2001	:	
Attorney Docket No. n/a	:	

This is a decision on the petition under 37 CFR 1.137(b), filed October 1, 2002, to revive the above-identified application.

The petition is **GRANTED**.

This application became abandoned for failure to reply in a timely manner to the non-final Office action mailed July 27, 2001, which set a statutory period for Two Months from the mail date of the Notice. No extensions of time under the provisions of 37 CFR 1.136(a) have been obtained. Accordingly, the application became abandoned on September 28, 2001.

This application is being forwarded to the Office of Initial Patent Examination for further processing.

Telephone inquiries regarding this decision may be directed to Latrice Bond at (703) 308-6911.

Latrice Bond

Latrice Bond
Paralegal Specialist
Office of Petitions
Office of the Deputy Commissioner
For Patent Examination Policy

UNITED STATES PATENT AND TRADEMARK OFFICE

Commissioner for Patents
United States Patent and Trademark Office
P.O. Box 1450
Alexandria, VA 22313-1450
www.uspto.gov

DARBY & DARBY P.C.
P.O. BOX 5257
NEW YORK NY 10150-5257

COPY MAILED
APR 25 2006
OFFICE OF PETITIONS

In re Application of Goldman et al. :
Application No. 09/870,252 : Decision on Petition
Filing Date: May 29, 2001 :
Attorney Docket No. 08204/0203161-US0 :

This is a decision on the petition under 37 CFR 1.137(b), filed November 4, 2005, to revive the above-identified application.

The petition is **granted**.

This application became abandoned for failure to timely reply within three months to the non-final Office action mailed December 27, 2004. An extension of time under the provisions of 37 CFR 1.136(a) was not obtained. Accordingly, this application became abandoned on March 28, 2005. A Notice of Abandonment was mailed on August 5, 2005.

The instant petition requests revival of the application. Petitioner has met the requirements to revive the above-identified application pursuant to 37 CFR 1.137(b). Therefore, the petition is granted and the application is revived.

The petition is signed by John Branch. Branch was not an attorney or agent of record at the time the application became abandoned. Therefore, it appears that Branch was not in a position to have firsthand knowledge of the facts and circumstances of the delay. Nevertheless, Branch's statement that the entire delay was unintentional is being treated as having been made as the result of a reasonable inquiry into the facts and circumstances of such delay. In the event that such an inquiry has not been made, petitioner must make such an inquiry. If such inquiry results in the discovery that a portion of the delay was unintentional, petitioner must notify the Office.

Technology Center Art Unit 2616 will be informed of the instant decision and the application will be further examined in due course.

Telephone inquiries regarding this communication should be directed to Petitions Attorney Steven Brantley at (571) 272-3203.

Charles Steven Brantley
Senior Petitions Attorney
Office of Petitions

UNITED STATES PATENT AND TRADEMARK OFFICE

Commissioner for Patents
United States Patent and Trademark Office
P.O. Box 1450
Alexandria, VA 22313-1450
www.uspto.gov

DARBY & DARBY P.C.
P.O. BOX 5257
NEW YORK NY 10150-5257

COPY MAILED
APR 26 2006
OFFICE OF PETITIONS

COPY MAILED
APR 25 2006
OFFICE OF PETITIONS

In re Application of Goldman et al. :
Application No. 09/870,252 :
Filing Date: May 29, 2001 :
Attorney Docket No. 08204/0203161-US0 :

Decision on Petition

This is a decision on the petition under 37 CFR 1.137(b), filed November 4, 2005, to revive the above-identified application.

The petition is **granted**.

This application became abandoned for failure to timely reply within three months to the non-final Office action mailed December 27, 2004. An extension of time under the provisions of 37 CFR 1.136(a) was not obtained. Accordingly, this application became abandoned on March 28, 2005. A Notice of Abandonment was mailed on August 5, 2005.

The instant petition requests revival of the application. Petitioner has met the requirements to revive the above-identified application pursuant to 37 CFR 1.137(b). Therefore, the petition is granted and the application is revived.

The petition is signed by John Branch. Branch was not an attorney or agent of record at the time the application became abandoned. Therefore, it appears that Branch was not in a position to have firsthand knowledge of the facts and circumstances of the delay. Nevertheless, Branch's statement that the entire delay was unintentional is being treated as having been made as the result of a reasonable inquiry into the facts and circumstances of such delay. In the event that such an inquiry has not been made, petitioner must make such an inquiry. If such inquiry results in the discovery that a portion of the delay was unintentional, petitioner must notify the Office.

Technology Center Art Unit 2616 will be informed of the instant decision and the application will be further examined in due course.

Telephone inquiries regarding this communication should be directed to Petitions Attorney Steven Brantley at (571) 272-3203.

Charles Steven Brantley
Senior Petitions Attorney
Office of Petitions

UNITED STATES PATENT AND TRADEMARK OFFICE

COMMISSIONER FOR PATENTS
UNITED STATES PATENT AND TRADEMARK OFFICE
WASHINGTON, D.C. 20231
www.uspto.gov

MAILED

JUN 0 3 2003

Technology Center 2100

Paper No. 4

FISH & RICHARDSON P.C.
225 Franklin Street
Boston, MA 02110-2804

In re Application of: Mojdeh Shakeri, et al.	)	
Application No. 09/870,280	)	**DECISION ON REQUEST FOR**
Filed: May 30, 2001	)	**WITHDRAWAL AS ATTORNEY**
For: BLOCK DIAGRAM MODELING	)	

This is a decision on the Request To Withdraw from Representation filed May 22, 2003.

A grantable request to withdraw as attorney of record should indicate thereon the present mailing addresses of the attorney(s) who is/are withdrawing from the record and of the applicant. The request for withdrawal must be signed by every attorney seeking to withdraw or contain a clear indication that one attorney is signing on behalf of another/others. A request to withdraw will not be approved unless at least 30 (thirty) days would remain between the date of approval and the later of the expiration date of a time to file a response or the expiration date of the maximum time period which can be extended under 37 C.F.R. § 1. 136(a). The effective date of withdrawal being the date of decision and not the date of request. See M.P.E.P. § 402.06. 37 C.F.R. § 1.36 further requires that the applicant or patent owner be notified of the withdrawal of the attorney or agent.

The request is **GRANTED**.

All future communications from the Office will be directed to the below-listed address until otherwise notified by applicant. This correspondence address is provided by the withdrawn attorney(s). Applicant is reminded of the obligation to promptly notify the Patent and Trademark Office (Office) of any change in correspondence address to ensure receipt of all communications from the Office.

For Vincent N. Trans
Special Programs Examiner
Technology Center 2100
Computer Architecture and Software
(703) 305-9750

cc: Thomas V. Smurzynski, Esq.
Lahive & Cockfield LLP
28 State Street
Boston, MA 02109-1784

UNITED STATES PATENT AND TRADEMARK OFFICE

Commissioner for Patents
United States Patent and Trademark Office
P.O. Box 1450
Alexandria, VA 22313-1450
www.uspto.gov

DAVID VICTOR
KONRAD RAYNES & VICTOR LLP
315 SOUTH BEVERLY DRIVE
SUITE 210
BEVERLY HILLS, CA 90212

COPY MAILED

AUG 0 2 2005

OFFICE OF PETITIONS

In re Application of	:	
John Edward Bish et al	:	
Application No. 09/870,291	:	DECISION GRANTING PETITION
Filed: May 30, 2001	:	UNDER 37 CFR 1.313(c)(2)
Attorney Docket No. TUC920000096US1	:	

This is a decision on the petition, filed July 29, 2005, under 37 CFR 1.313(c)(2) to withdraw the above-identified application from issue after payment of the issue fee.

The petition is **GRANTED**.

The above-identified application is withdrawn from issue for consideration of a submission under 37 CFR 1.114 (request for continued examination). See 37 CFR 1.313(c)(2).

Petitioner is advised that the issue fee paid on May 3, 2005 in the above-identified application cannot be refunded. If, however, the above-identified application is again allowed, petitioner may request that it be applied towards the issue fee required by the new Notice of Allowance.[1]

Telephone inquiries should be directed to the undersigned at (571) 272-3218.

This matter is being referred to Technology Center AU 2115 for processing of the request for continued examination under 37 CFR 1.114 and for consideration of the Information Disclosure Statement.

Frances Hicks
Frances Hicks
Petitions Examiner
Office of Petitions

---

[1] *The request to apply the issue fee to the new Notice may be satisfied by completing and returning the new Issue Fee Transmittal Form PTOL-85(b), which includes the following language thereon: "Commissioner for Patents is requested to apply the Issue Fee and Publication Fee (if any) or re-apply any previously paid issue fee to the application identified above." Petitioner is advised that, whether a fee is indicated as being due or not, the Issue Fee Transmittal Form* ***must*** *be completed and timely submitted to avoid abandonment. Note the language in bold text on the first page of the Notice of Allowance and Fee(s) Due (PTOL-85).*

UNITED STATES PATENT AND TRADEMARK OFFICE

Commissioner for Patents
United States Patent and Trademark Office
P.O. Box 1450
Alexandria, VA 22313-1450
www.uspto.gov

CHARLES G. CALL
68 HORSE POND ROAD
WEST YARMOUTH, MA 02673-2516

COPY MAILED

AUG 2 5 2005

OFFICE OF PETITIONS

In re Application of :
Biswas et al. :
Application No. 09/870,301 :
Filed: May 30, 2001 :
Attorney Docket No. A-017 :

Decision on Petition

This is a decision on the petition under 37 CFR 1.137(b), filed June 15, 2005, to revive the above-identified application.

The petition is **granted.**

The above-identified application became abandoned for failure to submit the issue fee and publication fee in a timely manner in reply to the Notice of Allowance mailed March 14, 2005, which set a statutory period for reply of three (3) months. Accordingly, the above-identified application became abandoned as of midnight on June 14, 2005.

The instant petition requests revival of the application. Petitioner has met the requirements to revive the above-identified application pursuant to 37 CFR 1.137(b). Therefore, the petition is granted and the application is revived.

The Office of Publications will be notified the application has been revived so that it may take steps to process the application into a patent.

Telephone inquiries may be directed to Petitions Attorney Steven Brantley at (571) 272-3203.

Charles Steven Brantley
Petitions Attorney
Office of Petitions

UNITED STATES PATENT AND TRADEMARK OFFICE

UNITED STATES DEPARTMENT OF COMMERCE
United States Patent and Trademark Office
Address: COMMISSIONER FOR PATENTS
P.O. Box 1450
Alexandria, Virginia 22313-1450
www.uspto.gov

IBM CORPORATION, INTELLECTUAL PROPERTY LAW
DEPT 917, BLDG. 006-1
3605 HIGHWAY 52 NORTH
ROCHESTER, MN 55901-7829

Mail Date: 04/21/2010

Applicant	: Debasish Banerjee	: DECISION ON REQUEST FOR
Patent Number	: 7603403	: RECALCULATION of PATENT
Issue Date	: 10/13/2009	: TERM ADJUSTMENT IN VIEW
Appliction No	: 09/870,319	: OF WYETH AND NOTICE OF INTENT TO
Filed	: 05/30/2001	: ISSUE CERTIFICATE OF CORRECTION
		:

The Request for Recalculation is **GRANTED** to the extent indicated.

The patent term adjustment has been determined to be **1132** days. The USPTO will *sua sponte* issue a certificate of correction reflecting the amount of PTA days determined by the recalculation.

Prior to the issuance of the certificate of correction, the USPTO will afford patentee an opportunity to be heard and request reconsideration. Accordingly, patentee has **one month or thirty (30) days**, whichever is longer, to file a request for reconsideration of this patent term adjustment calculation. See 35 U.S.C. 154(b)(3)(B)(ii) and 37 CFR 1.322(a)(4). No extensions of time will be granted under 37 CFR 1.136.

Patentee should use document code PET.OP if electronically filing a request for reconsideration of this patent term adjustment calculation. The patentee must also include the information required by 37 CFR 1.705(b)(2) and the fee required by 37 CFR 1.18(e). If patentee does not file a timely request for reconsideration of this patent term adjustment calculation including the information required by 37 CFR 1.705(b)(2) and the fee required by 37 CFR 1.18(e), the USPTO will issue a certificate of correction reflecting the PTA determination noted above.

Patentee should be aware that in order to preserve the right to review in the United States District Court for the District of Columbia of the USPTO patent term adjustment determination, patentee must ensure that he or she also take the steps required under 35 U.S.C. 154(b)(4)(A) in a timely manner. Nothing in the request for recalculation should be construed as providing an alternative time frame for commencing a civil action under 35 U.S.C. 154(b)(4)(A).

Any questions concerning this decision should be directed to the Office of Patent Legal Administration at 571-272-7702.

UNITED STATES PATENT AND TRADEMARK OFFICE

Commissioner for Patents
United States Patent and Trademark Office
P.O. Box 1450
Alexandria, VA 22313-1450
www.uspto.gov

CLIFFORD CHANCE US LLP
31 WEST 52ND STREET
NEW YORK, NY 10019-6131

COPY MAILED

FEB 03 2009

OFFICE OF PETITIONS

In re Application of
David L. **CLEARY NEUBERT, et al.**
Application No. 09/870,325
Filed: May 30, 2001
Attorney Docket No. **6208-019**

DECISION GRANTING PETITION
UNDER 37 CFR 1.313(c)(2)

This is a decision on the petition under 37 CFR 1.313(c)(2), filed January 30, 2009, to withdraw the above-identified application from issue after payment of the issue fee.

The petition is **GRANTED.**

The above-identified application is withdrawn from issue for consideration of a submission under 37 CFR 1.114 (request for continued examination). *See* 37 CFR 1.313(c)(2).

Petitioner is advised that the issue fee paid on January 26, 2009 cannot be refunded. If, however, this application is again allowed, petitioner may request that it be applied towards the issue fee required by the new Notice of Allowance.[1]

There is no indication that the person signing the petition was ever given a power of attorney or authorization of agent to prosecute the above-identified application. However, the signature of Ms. Isabel Cantallops appearing on the petition shall constitute a representation to the United States Patent and Trademark Office that she is authorized to represent the particular party on whose behalf he acts in accordance with 37 CFR 1.34(a).

Telephone inquiries should be directed to Monica A. Graves at (571) 272-7253.

This application is being referred to Technology Center AU 3695 for processing of the request for continued examination under 37 CFR 1.114 and for consideration of the previously filed amendment of January 26, 2009.

/Monica A. Graves/
Petitions Examiner, Office of Petitions

---

[1] *The request to apply the issue fee to the new Notice may be satisfied by completing and returning the new Part B – Fee(s) Transmittal Form (along with any balance due at the time of submission). Petitioner is advised that the Issue Fee Transmittal Form* ***must*** *be completed and timely submitted to avoid abandonment of the application.*

UNITED STATES PATENT AND TRADEMARK OFFICE

Commissioner for Patents
United States Patent and Trademark Office
P.O. Box 1450
Alexandria, VA 22313-1450
www.uspto.gov

PHILIP S. JOHNSON
JOHNSON & JOHNSON
ONE JOHNSON & JOHNSON PLAZA
NEW BRUNSWICK NJ 08933-7003

COPY MAILED

AUG 1 0 2005

OFFICE OF PETITIONS

In re Application of	:	
Zhang et al.	:	
Application No. 09/870,338	:	ON PETITION
Filed: May 30, 2001	:	
Attorney Docket No. ORT 1440	:	

This is a decision on the petition under 37 C.F.R. § 1.137(b), filed May 19, 2005, to revive the above-identified application.

The petition is **GRANTED.**

This application became abandoned for failure to timely reply to the non-final Office action mailed December 1, 2003. No extensions of time under the provisions of 37 CFR 1.136(a) were obtained. Accordingly, this application became abandoned on March 2, 2004. A Notice of Abandonment was mailed August 25, 2004.

Petitioner has met the requirements to revive the above-identified application pursuant to 37 CFR 1.137(b).

This matter is being referred to Technology Center 1600 for further examination on the merits.

Telephone inquiries regarding this decision should be directed to the undersigned at (571) 272-3282.

Liana Chase
Petitions Examiner
Office of Petitions
Office of the Deputy Commissioner
for Patent Examination Policy

UNITED STATES PATENT AND TRADEMARK OFFICE

Commissioner for Patents
United States Patent and Trademark Office
P.O. Box 1450
Alexandria, VA 22313-1450
www.uspto.gov

PHILIP S. JOHNSON
JOHNSON & JOHNSON
ONE JOHNSON & JOHNSON PLAZA
NEW BRUNSWICK, NJ 08933-7003

COPY MAILED

JUN 07 2005

OFFICE OF PETITIONS

In re Application of	:	
Zhang et al.	:	
Application No. 09/870,339	:	ON PETITION
Filed: May 30, 2001	:	
Attorney Docket No. ORT-1440	:	

This is a decision on the petition under 37 C.F.R. § 1.137(b), filed May 19, 2005, to revive the above-identified application.

The petition is **GRANTED.**

This application became abandoned for failure to timely reply to the non-final Office action mailed December 1, 2003. No extensions of time under the provisions of 37 CFR 1.136(a) were obtained. Accordingly, this application became abandoned on March 2, 2004. A Notice of Abandonment was mailed August 25, 2004.

Petitioner has met the requirements to revive the above-identified application pursuant to 37 CFR 1.137(b).

This matter is being referred to Technology Center 1600 for further examination on the merits.

Telephone inquiries regarding this decision should be directed to the undersigned at (571) 272-3282.

Liana Chase
Petitions Examiner
Office of Petitions
Office of the Deputy Commissioner
for Patent Examination Policy

PTO/SB/66 (03-09)
Approved for use through 03/31/2012. OMB 0651-0016
U.S. Patent and Trademark Office: U.S. DEPARTMENT OF COMMERCE
Under the Paperwork Reduction Act of 1995, no persons are required to respond to a collection of information unless it displays valid OMB control number.

PETITION TO ACCEPT UNINTENTIONALLY DELAYED PAYMENT OF MAINTENANCE FEE IN AN EXPIRED PATENT (37 CFR 1.378(c))

Patent Number	Issue Date (YYYY-MM-DD)	Application Number	Filing Date (YYYY-MM-DD)	Docket Number (if applicable)
6,679,855	2004-01-20	09/870,368	2001-05-29	ASD10554P00180US

CAUTION: Maintenance fee (and surcharge, if any) payment must correctly identify: (1) the patent number and (2) the application number of the actual U.S. application leading to issuance of that patent to ensure the fee(s) is/are associated with the correct patent. 37 CFR 1.366(c) and (d).

SMALL ENTITY
☒ Patentee claims, or has previously claimed, small entity status. See 37 CFR 1.27.

LOSS OF ENTITLEMENT TO SMALL ENTITY STATUS
☐ Patentee is no longer entitled to small entity status. See 37 CFR 1.27(g)

NOT Small Entity			Small Entity		
	Fee	Code		Fee	Code
○	3 ½ year	(1551)	◉	3 ½ year	(2551)
○	7 ½ year	(1552)	○	7 ½ year	(2552)
○	11 ½ year	(1553)	○	11 ½ year	(2553)

SURCHARGE
The surcharge required by 37 CFR 1.20(i)(2) (Fee Code 1558) must be paid as a condition of accepting unintentionally delayed payment of the maintenance fee.

MAINTENANCE FEE (37 CFR 1.20(e)-(g))
The appropriate maintenance fee must be submitted with this petition.

STATEMENT
THE UNDERSIGNED CERTIFIES THAT THE DELAY IN PAYMENT OF THE MAINTENANCE FEE TO THIS PATENT WAS UNINTENTIONAL

PETITIONER(S) REQUEST THAT THE DELAYED PAYMENT OF THE MAINTENANCE FEE BE ACCEPTED AND THE PATENT REINSTATED

THIS PORTION MUST BE COMPLETED BY THE SIGNATORY OR SIGNATORIES

37 CFR 1.378(d) states: "Any petition under this section must be signed by an attorney or agent registered to practice before the Patent and Trademark Office, or by the patentee, the assignee, or other party in interest."

I certify, in accordance with 37 CFR 1.4(d)(4) that I am

◉ An attorney or agent registered to practice before the Patent and Trademark Office

○ A sole patentee

○ A joint patentee; I certify that I am authorized to sign this submission on behalf of all the other patentees.

○ A joint patentee; all of whom are signing this e-petition

○ The assignee of record of the entire interest

Patent Practitioner			
A signature of the applicant or representative is required in accordance with 37 CFR 1.33 and 10.18. Please see 37 CFR 1.4(d) for the form of the signature			
Signature	/Mark Polyakov/	Date (YYYY-MM-DD)	2009-12-22
Name	Mark Polyakov	Registration Number	54377

This collection of information is required by 37 CFR 1.378(c). The information is required to obtain or retain a benefit by the public which is to file (and by the USPTO to process) an application. Confidentiality is governed by 35 U.S.C. 122 and 37 CFR 1.11 and 1.14. This collection is estimated to take 1 hour to complete, including gathering, preparing, and submitting the completed application form to the USPTO. Time will vary depending upon the individual case. Any comments on the amount of time you require to complete this form and/ or suggestions for reducing this burden, should be sent to the Chief Information Officer, U.S. Patent and Trademark Office, U.S. Department of Commerce, P.O. Box 1450, Alexandria, VA 22313-1450. DO NOT SEND FEES OR COMPLETED FORMS TO THIS ADDRESS. **This form can only be used when in conjunction with EFS-Web. If this form is mailed to the USPTO, it may cause delays in reinstating the patent.**

Privacy Act Statement

The Privacy Act of 1974 (P.L. 93-579) requires that you be given certain information in connection with your submission of the attached form related to a patent application or patent. Accordingly, pursuant to the requirements of the Act, please be advised that: (1) the general authority for the collection of this information is 35 U.S.C. 2(b)(2); (2) furnishing of the information solicited is voluntary; and (3) the principal purpose for which the information is used by the U.S. Patent and Trademark Office is to process and/or examine your submission related to a patent application or patent. If you do not furnish the requested information, the U.S. Patent and Trademark Office may not be able to process and/or examine your submission, which may result in termination of proceedings or abandonment of the application or expiration of the patent.

The information provided by you in this form will be subject to the following routine uses:

1. The information on this form will be treated confidentially to the extent allowed under the Freedom of Information Act (5 U.S.C. 552) and the Privacy Act (5 U.S.C. 552a). Records from this system of records may be disclosed to the Department of Justice to determine whether the Freedom of Information Act requires disclosure of these records.

2. A record from this system of records may be disclosed, as a routine use, in the course of presenting evidence to a court, magistrate, or administrative tribunal, including disclosures to opposing counsel in the course of settlement negotiations.

3. A record in this system of records may be disclosed, as a routine use, to a Member of Congress submitting a request involving an individual, to whom the record pertains, when the individual has requested assistance from the Member with respect to the subject matter of the record.

4. A record in this system of records may be disclosed, as a routine use, to a contractor of the Agency having need for the information in order to perform a contract. Recipients of information shall be required to comply with the requirements of the Privacy Act of 1974, as amended, pursuant to 5 U.S.C. 552a(m).

5. A record related to an International Application filed under the Patent Cooperation Treaty in this system of records may be disclosed, as a routine use, to the International Bureau of the World Intellectual Property Organization, pursuant to the Patent Cooperation Treaty.

6. A record in this system of records may be disclosed, as a routine use, to another federal agency for purposes of National Security review (35 U.S.C. 181) and for review pursuant to the Atomic Energy Act (42 U.S.C. 218(c)).

7. A record from this system of records may be disclosed, as a routine use, to the Administrator, General Services, or his/her designee, during an inspection of records conducted by GSA as part of that agency's responsibility to recommend improvements in records management practices and programs, under authority of 44 U.S.C. 2904 and 2906. Such disclosure shall be made in accordance with the GSA regulations governing inspection of records for this purpose, and any other relevant (i.e., GSA or Commerce) directive. Such disclosure shall not be used to make determinations about individuals.

8. A record from this system of records may be disclosed, as a routine use, to the public after either publication of the application pursuant to 35 U.S.C. 122(b) or issuance of a patent pursuant to 35 U.S.C. 151. Further, a record may be disclosed, subject to the limitations of 37 CFR 1.14, as a routine use, to the public if the record was filed in an application which became abandoned or in which the proceedings were terminated and which application is referenced by either a published application, an application open to public inspections or an issued patent.

9. A record from this system of records may be disclosed, as a routine use, to a Federal, State, or local law enforcement agency, if the USPTO becomes aware of a violation or potential violation of law or regulation.

UNITED STATES PATENT AND TRADEMARK OFFICE

Commissioner for Patents
United States Patent and Trademark Office
P.O. Box 1450
Alexandria, VA 22313-1450
www.uspto.gov

In re Patent No. 6679855
Issue Date: January 20,2004
Application No. 09870368
Filed: May 29,2001
Attorney Docket No. HORN005CIP

:
:DECISION GRANTING PETITION
:UNDER 37 CFR 1.378(c)
:

This is a decision on the electronic petition, filed December 22,2009 ,under 37 CFR 1.378(c) to accept the unintentionally delayed payment of the 3.5 year maintenance fee for the above-identified patent.

The petition is **GRANTED**.

The maintenance fee is accepted, and the above-identified patent reinstated as of December 22,2009 . This decision also constitutes notice that the fee has been accepted. An electronic copy of the petition and this decision has been created as an entry in the Image File Wrapper. Nevertheless, petitioner should print and retain an independent copy.

Telephone inquiries related to this electronic decision should be directed to the Electronic Business Center at 1-866-217-9197.

UNITED STATES PATENT AND TRADEMARK OFFICE

COMMISSIONER FOR PATENTS
UNITED STATES PATENT AND TRADEMARK OFFICE
WASHINGTON, D.C. 20231
www.uspto.gov

Paper No. 6

JAMES J. BARTA, JR
SENNIGER, POWERS, LEAVITT & ROEDEL
ONE METROPOLITAN SQUARE, 16TH FLOOR
ST. LOUIS, MO 63102

COPY MAILED

NOV 1 9 2001

OFFICE OF PETITIONS

In re Application of	:
LaVonne Cule et al.	:
Application No. 09/870,373	: DECISION GRANTING
Filed: May 30, 2001	:STATUS UNDER 37 CFR 1.47(a)
For: METHOD OF GRAPHICALLY	:
INDICATING PATIENT INFORMATION	:

This is in response to the petition under 37 CFR 1.47(a), filed October 2, 2001.

The petition is granted.

Petitioner has shown that the non-signing inventor has refused to join in the filing of the above-identified application.

The above-identified application and papers have been reviewed and found in compliance with 37 CFR 1.47(a). This application is hereby accorded Rule 1.47(a) status. As provided in Rule 1.47(c), this Office will forward notice of this application's filing to the non-signing inventor at the address given in the petition. Notice of the filing of this application will also be published in the Official Gazette.

Telephone inquiries regarding this decision should be directed to Irvin Dingle at (703) 306-5684.

This application is being forwarded to the Initial Patent Examination Unit.

Frances Hicks

Frances Hicks
Lead Petitions Examiner
Office of Petitions
Office of the Deputy Commissioner
for Patent Examination Policy

UNITED STATES PATENT AND TRADEMARK OFFICE

Commissioner for Patents
United States Patent and Trademark Office
P.O. Box 1450
Alexandria, VA 22313-1450
www.uspto.gov

Paper No.

KNOBBE MARTENS OLSON &
BEAR LLP
2040 MAIN STREET
FOURTEENTH FLOOR
IRVINE, CA 92614

COPY MAILED

DEC 16 2005

OFFICE OF PETITIONS

In re Application of	:	
Zhimin Lu	:	DECISION ON APPLICATION
Application No. 09/870,393	:	FOR
Filed: May 29, 2001	:	PATENT TERM ADJUSTMENT
Atty Docket No. ASMEX.282A	:	

This is a decision on the "REQUEST FOR RECONSIDERATION OF PATENT TERM ADJUSTMENT UNDER 37 C.F.R. 1.705(b)", filed August 8, 2005. Applicant requests that the initial determination of patent term adjustment be corrected from zero (0) to eight hundred forty-five (845) days[1].

The application for patent term adjustment is **GRANTED** to the extent indicated herein.

The Office has updated the PAIR screen to reflect that the correct Patent Term Adjustment (PTA) determination at the time of the mailing of the Notice of Allowance is eight hundred seventeen **(817)** days. A copy of the updated PAIR screen, showing the correct determination, is enclosed.

On May 9, 2005, the Office mailed the Determination of Patent Term Adjustment under 35 U.S.C. 154(b) in the above-identified application. The Notice stated that the patent term adjustment

[1] In the first line of the statement of facts, applicant submits that the correct patent term adjustment (PTA) is 817 days. However, throughout the petition, applicant argues that the PTA is 845 days.

(PTA) to date is 0 days. On August 8, 2005, applicant timely[2] submitted this application for patent term adjustment. Applicant submits that the adjustment of 0 days has been erroneously calculated, based on an incorrect date assigned to the Patent Term History listings for "Statement by one or more inventors satisfying the requirement under 35 USC 115, Oath of the Applicant" and "Payment of additional filing fee." Applicant states that their response to the Notice to File Missing Parts of Application mailed August 2, 2001 was received by the PTO on January 23, 2002, which was 82 days more than three months after mailing of the Notice to File Missing Parts, and should have been received by December 26, 2001, which was only 54 days more than three months after mailing of the Notice to File Missing Parts.

Applicant argues that the December 26, 2001 date should be used in calculating their delay, and thus, the period of delay is 54 days. In support of this argument, applicant cites the occurrence of a Postal Service delay because the mailing was during the period when anthrax was suspected in the mail. Applicant states that in the ordinary course, the mailing would be expected to be received within three business days. In light of the intervening holiday, applicant states the mailing should have been received on December 26, 2001, rather than the January 23, 2002 date acknowledged by the Patent Office.

Applicant submits that the patent issuing from this application is not subject to a terminal disclaimer.

Applicant's arguments have been considered, but not found persuasive as to using a December 26, 2001 date for calculating the period of reduction pursuant to § 1.704(b). The circumstances of the Postal Service delays and the relief afforded to affected individuals was addressed in an OG Notice dated January 15, 2002 (1254 OG 92). However, the provisions for reinstating patent term adjustment applied only to replies mailed on or after October 13, 2001 and no later than December 1, 2001. A review of the application history confirms that the response at issue was mailed with a certificate of mailing on December 21, 2001, but was not received by the Patent Office until January 23, 2002. As the response was mailed on December 21, 2001, the provisions of the OG Notice are not applicable.

---

[2] PALM records indicate that the issue fee payment was also received on August 8, 2005.

Otherwise, the Office on application for patent term adjustment under § 1.705(b) does not reinstate patent term based on such an expected date of receipt. The date the reply was actually filed is used in calculating the patent term adjustment. Specifically, 37 C.F.R. § 1.704(b) provides, in pertinent part, that:

> …, an applicant shall be deemed to have failed to engage in reasonable efforts to conclude processing or examination of an application for the cumulative total of any periods of time in excess of three months that are taken to reply to any notice or action by the Office making any rejection, objection, argument, or other request, measuring such three-month period from the date the notice or action was mailed or given to the applicant, in which case the period of adjustment set forth in § 1.703 shall be reduced by the number of days, if any, beginning on the day after the date that is three months after the date of mailing or transmission of the Office communication notifying the applicant of the rejection, objection, argument, or other request and ending on the date the reply was filed.

37 CFR 1.703(f), further provides that "[t]he date indicated on any certificate of mailing or transmission under § 1.8 shall not be taken into account in this calculation" of patent term adjustment. See also, Comment 10, *Changes to Implement Patent Term Adjustment under Twenty-Year Patent Term; Final Rule*, 65 Fed. Reg. 54366 (September 18, 2000). As stated in MPEP 2731:

> The date indicated on a certificate of mailing is used only to determine whether the correspondence is timely (including whether any extension of the time and fee are required) so as to avoid abandonment of the application or termination or dismissal of proceedings. The actual date of receipt of the correspondence in the Office is used for all other purposes. See 37 CFR 1.8(a). Thus, while the date indicated on any certificate of mailing or transmission under 37 CFR 1.8 will continue to be taken into account in determining timeliness, the date of filing (37 CFR 1.6) will be the date used in a patent term adjustment calculation. Applicant may wish to consider the use of the "Express Mail Post Office to Addressee " service of the United States Postal Service (37 CFR 1.10) or facsimile transmission (37 CFR 1.6(d)) for replies to be accorded the earliest possible filing date for patent term adjustment

> calculations. Alternatively, applicant may choose to mail correspondence with sufficient time to ensure that the correspondence is received in the Office (and stamped with a date of receipt) before the expiration of the three-month period. …

Nonetheless, the period of reduction is not 900 days. In this instance, the period of reduction is 82 days, counting the number of days beginning on the day after the date that is three months after the date of mailing of the Notice to File Missing Parts, November 3, 2001, and ending on the date the reply was filed, January 23, 2002.

In view thereof, the correct determination of patent term adjustment at the time of the mailing of the Notice of Allowance is eight hundred seventeen (817) days.

The Office acknowledges submission of the $200.00 fee set forth in 37 CFR 1.18(e). No additional fees are required.

The Office of Patent Publication has been advised of this decision. The application is, thereby, forwarded to the Office of Patent Publication so that the patent can be issued. The patent term adjustment indicated on the patent will include any patent term adjustment accrued for Office delay in issuing the patent.

Telephone inquiries specific to this matter should be directed to the undersigned at (571) 272-3219.

Nancy Johnson
Senior Petitions Attorney
Office of Petitions

Attachment: Copy of Revised PAIR Screen

SPE RESPONSE FOR CERTIFICATE OF CORRECTION

Paper No.: _____

DATE : 10/12/06

TO SPE OF : ART UNIT 2826

SUBJECT : Request for Certificate of Correction for Appl. No.: **09/870393** Patent No.: **7008802**

Please respond to this request for a certificate of correction within 7 days.

Please review the requested changes/corrections as shown in the **COCIN** document(s) in the IFW application image. No new matter should be introduced, nor should the scope or meaning of the claims be changed.

Please complete the response (see below) and forward the completed response to scanning using document code **COCX**.

A. Green

Angela Green
Certificates of Correction Branch
703.308.9380 ext. 123

Thank You For Your Assistance

The request for issuing the above-identified correction(s) is hereby:
Note your decision on the appropriate box.

- [x] **Approved** — **All** changes apply.
- [ ] **Approved in Part** — Specify below which changes **do not** apply.
- [ ] **Denied** — State the reasons for denial below.

Comments:
Formalizes drawings and corrects informalities in the specification.
- E. Pert

[signature]
SPE

2826
Art Unit

PTOL-306 (REV. 7/03)

U.S. DEPARTMENT OF COMMERCE Patent and Trademark Office

UNITED STATES PATENT AND TRADEMARK OFFICE

Commissioner for Patents
United States Patent and Trademark Office
P.O. Box 1450
Alexandria, VA 22313-1450
www.uspto.gov

dss

Mailed: 6-7-06

In re application of :
Yoshiki Nakagawa et al. : DECISION ON
Serial No.09/870,397 : PETITION
Filed: May 31, 2001 :
For: FUNCTIONAL GROUPS-TERMINATED VINYL POLYMERS
:

This is a response to the PETITION TO WITHDRAW NOTICE OF ABANDONMENT filed February 13, 2006 and resubmitted March 08, 2006. The petition requests that the abandonment, as set forth in the Notice of Abandonment of February 06, 2006, for failure to timely file a proper reply to the Office letter mailed on May 18, 2005 be withdrawn since the applicants did timely file a reply August 03, 2005. (A copy of the reply filed August 03, 2005 is attached to the instant petition.)

DECISION

The instant request has been accepted as a petition to withdraw the holding of abandonment under the provisions of 37 CFR 1.181 (no fee) - no abandonment-in-fact. A review of the evidence presented reveals that the reply was properly filed on August 03, 2005, by facsimile transmission as evidenced by the copy of the Facsimile Transmission report provided with the instant petition which indicates the successful transmission, to a USPTO facsimile telephone number of 7 pages. Therefore, the application was never in-fact abandoned and any holding of abandonment for failure to timely file a proper reply to the Office letter mailed May 18, 2005 is hereby vacated and the application is returned to pending status.

The application shall be forwarded to the examiner for entry, processing and consideration of the reply originally filed August 03, 2005.

The Petition is **GRANTED**.

Jacqueline M. Stone

Jacqueline Stone, Director
Technology Center 1700
Chemical and Materials Engineering

Burton A. Amernick
Connolly, Bove, Lodge, & Hutz LLP
Suite 800
1990 M Street, N. W.
Washington, D.C. 20036-3425

UNITED STATES PATENT AND TRADEMARK OFFICE

COMMISSIONER FOR PATENTS
UNITED STATES PATENT AND TRADEMARK OFFICE
P.O. BOX 1450
ALEXANDRIA, VA 22313-1450
www.uspto.gov

ANTON-LEWIS USALA, MD
USALA CONSULTING, INC.
237 BUCKINGHAM DRIVE
WINTERVILLE NC 28590

ALSTON & BIRD LLP
BANK OF AMERICA PLAZA
101 SOUTH TRYON STREET, SUITE 4000
CHARLOTTE NC 28280-4000

In re Application of	:
Anton-Lewis Usala	:
Serial No.: 09/870,414	: REVOCATION OF ATTORNEY
Filed: May 30, 2001	:
Attorney Docket No.: 35626/234825	:

This is in response to paper submitted July 22, 2002, entitled "REVOCATION OF POWER OF ATTORNEY OR AUTRHORIZATION OF AGENT". The paper, Form PTO/SB/82, seeks to revoke the power of attorney given to Christopher M.Humphrey of Alston & Bird which was supplied at the time of filing of the application over the signature of inventor Anton-Lewis Usala. This application was by the inventor assigned to ENCELLE, INC., as of June 18, 2002. As the Revocation paper was not received until after the assignment of the application was effective, and as there is no evidence of concurrence by the assignee to the Revocation, the Revoication is DENIED.

Through inadvertence the Revocation was accepted and the mailing address changed and the Office action mailed November 4, 2003, was mailed to the wrong address. Office records will be corrected and the Office action remailed to the correct address.

Should there be any questions with regard to this letter please contact William R. Dixon, Jr. by letter addressed to the Director, Technology Center 1600, PO BOX 1450, ALEXANDRIA, VA 22313-1450, or by telephone at 571-272-0519 or by facsimile transmission at Office facsimile number.

William R. Dixon, Jr.
Special Program Examiner
Technology Center 1600

OIPE JC144
JUL 2 9 2002
PATENT & TRADEMARK OFFICE

Please type a plus sign (+) inside this box → [+]

PTO/SB/82 (10-00)
Approved for use through 10/31/2002. OMB 0651-0035
U.S. Patent and Trademark Office; U.S. DEPARTMENT OF COMMERCE

Under the Paperwork Reduction Act of 1995, no persons are required to respond to a collection of information unless it displays a valid OMB control number.

REVOCATION OF POWER OF ATTORNEY OR AUTHORIZATION OF AGENT

Application Number	09870414
Filing Date	May 30, 2002
First Named Inventor	Anton-Lewis Usala
Group Art Unit	1653
Examiner Name	Anish Gupta
Attorney Docket Number	35626/234825

RECEIVED
AUG 0 6 2002
TECH CENTER 1600/2900

I hereby revoke all previous powers of attorney or authorizations of agent given in the above-identified application:

COPY OF PAPERS ORIGINALLY FILED

☐ A Power of Attorney or Authorization of Agent is submitted herewith.

OR

☑ Please change the correspondence address for the above-identified application to:

☐ Customer Number [ ] →

Place Customer Number Bar Code Label here

OR

☑ Firm *or* Individual Name	Anton-Lewis Usala, MD				
Address	Usala Consulting, Inc.				
Address	237 Buckingham Drive				
City	Winterville				
Country	United States	State	NC	ZIP	28590
Telephone	252-355-5571	Fax	252-355-5810		

I am the:

☑ Applicant/Inventor.

☐ Assignee of record of the entire interest. See 37 CFR 3.71.
Statement under 37 CFR 3.73(b) is enclosed. (Form PTO/SB/96)

SIGNATURE of Applicant or Assignee of Record

Name	Anton-Lewis Usala
Signature	Anton-Lewis Usala
Date	July 22, 2002

NOTE: Signatures of all the inventors or assignees of record of the entire interest or their representative(s) are required. Submit multiple forms if more than one signature is required, see below*.

☐ *Total of ___1___ forms are submitted.

Burden Hour Statement: This form is estimated to take 3 minutes to complete. Time will vary depending upon the needs of the individual case. Any comments on the amount of time you are required to complete this form should be sent to the Chief Information Officer, U.S. Patent and Trademark Office, Washington, DC 20231. DO NOT SEND FEES OR COMPLETED FORMS TO THIS ADDRESS. SEND TO: Assistant Commissioner for Patents, Washington, DC 20231.

UNITED STATES PATENT AND TRADEMARK OFFICE

Commissioner for Patents
United States Patent and Trademark Office
P.O. Box 1450
Alexandria, VA 22313-1450
www.uspto.gov

MAILED

OCT 1 2 2006

TECHNOLOGY CENTER 2100

Wolf Greenfield & Sacks, PC
Federal Reserve Plaza
600 Atlantic Avenue
Boston, MA 02210-2206

In re Application of: Blackwell, et al.	)
Application No. 09/870,418	) DECISION ON PETITION FOR
Attorney Docket No. C1104.70001US00	) SUPERVISORY REVIEW REGARDING
Filed: May 30, 2001	) FINALITY OF RESTRICTION
For: METHOD AND APPARATUS FOR	) REQUIREMENT UNDER 37 CFR
AUTHORING AND PLAYING BACK	) §1.181 and 37 CFR §1.144
LIGHTING SEQUENCES	

This is in response to the petition filed on May 12, 2006, under 37 CFR 1.144 requesting supervisory review of the finality of a restriction requirement mailed on November 1, 2005. Note, a petition under 37 CFR §1.144 will not be considered if reconsideration of the requirement was not requested (see §1.181).

The petition is **GRANTED**.

RECENT PROSECUTION HISTORY

(1) A non-final first office action on the merits was mailed on February 9, 2005, in which all pending claims (1-84) were rejected on prior art.

(2) An amendment was filed on August 11, 2005. Claims 1, 2, 4, 5, 8, 11-16, 20, 30, 32, 33, 37, 41, 42, 45-53, 55, 57 & 63-67 were amended, while claims 3, 7, 31, 34, 39, 40, 44, 62 & 68-84 were cancelled.

(3) In response to amendment, the Examiner mailed a combination restriction requirement and species election on November 1, 2005. In the restriction, the Examiner grouped the claims according to the following: Group I – drawn to claims 1, 2, 5, 6, 8-29, 30, 33, 35-38, 42, 43 & 45-61; Group II – drawn to claims 4, 32 & 41; Group III – drawn to claims 63 & 65; Group IV – drawn to claims 64 & 66; and Group V – indicated to be drawn to claim 65*; and in the species election, within Group I - three different species were identified as follows: Species A – input from an external device; Species B – input from a user; Species C – input from a sensor.

(4) On November 22, 2005 and in response to the combination restriction and species election of November 1, 2005, Applicant provisionally elected Group I (claims 1, 2, 5, 6, 8-29, 30, 33, 35-38, 42, 43 & 45-61) and species A (claims 8, 11-13, 45-50 & 57). The election was

* believed to be a typo, should apparently be claim 67.

made with traverse wherein Applicant provided supporting arguments for the traversal along with a request for withdrawal of the restriction requirement.

(5) On February 23, 2006, the Examiner mailed a final Office action acknowledging Applicant's election with traverse of claims 1, 2, 5, 6, 8, 11-13, 17-20, 30, 33, 36, 37, 42, 45-50, 54, 55, 57, 60 & 61. The Examiner withdrew claims 4, 9, 10, 14-16, 21-29, 32, 35, 38, 41, 43, 51-53, 56, 58, 59 & 63-67. This office action determined the requirement for restriction to be proper and therefore was made FINAL.

(6) On May 12, 2006, the instant petition was filed by Petitioner under 37 CFR §1.144.

(7) On May 26, 2006, an amendment and remarks were filed. Subsequently, on July 31, 2006, replacement drawing sheets were filed.

(8) On September 26, 2006, an advisory action was mailed indicating the amendment filed May 26, 2006 will not be entered.

RELIEF REQUESTED

The instant petition under 37 CFR §1.144 requests the following relief:

(1) withdrawal of the restriction requirement and species election of November 1, 2005; and
(2) as a result of item (1) above, examination of the pending claims.

ANALYSIS

Petitioner provides various arguments in support of the withdrawal of the election/restriction requirement including reference M.P.E.P. § 803.

Restriction Requirement

First, an analysis with respect to the proposed restriction requirement under 35 U.S.C. 121 (subcombinations disclosed as usable together (Groups I – V) set forth by the Examiner in the Office action mailed November 1, 2005) will be proffered:

M.P.E.P. § 803 (Restriction – When Proper) states in part:

> There are **two criteria for a proper requirement for restriction** between patentably distinct inventions:
> **(A) The inventions must be independent** (see MPEP § 802.01, § *>806.06<, § 808.01) **or distinct as claimed** (see MPEP § 806.05 - §*>806.05(j)<); **and**
> **(B) There *>would< be a serious burden on the examiner** if restriction is >not< required (see MPEP § 803.02, **> § 808<, and § 808.02).
>
> For purposes of the initial requirement, **a serious burden on the examiner may be prima facie shown ** by appropriate explanation of separate classification, or separate status in the art, or a different field of search** as defined in MPEP § 808.02.

M.P.E.P § 808 (Reasons for Insisting Upon Restriction) states:

> **Every requirement to restrict has two aspects: (A) the reasons** (as distinguished from the mere statement of conclusion) **why **>each invention< as claimed *>is< either independent or distinct** >from the other(s)<; and **(B) the reasons >why there would be a serious burden on the examiner** if restriction is not required, i.e., the reasons< for insisting upon restriction therebetween as set forth in the following sections.

M.P.E.P. § 808.02 (Establishing Burden) sets forth:

> Where the related inventions as claimed are shown to be >independent or< distinct under the criteria of MPEP § 806.05(c) - *> § 806.06<, **the examiner, in order to establish**

> **reasons for insisting upon restriction, must >explain why there would be a serious burden on the examiner if restriction is not required. Thus the examiner must< show by appropriate explanation one of the following:**
> **(A) Separate classification thereof** : This shows that each **>invention< has attained recognition in the art as a separate subject for inventive effort, and also a separate field of search. Patents need not be cited to show separate classification.
> (B) A separate status in the art when they are classifiable together : Even though they are classified together, each *>invention< can be shown to have formed a separate subject for inventive effort when **>the examiner can show< a recognition of separate inventive effort by inventors. Separate status in the art may be shown by citing patents which are evidence of such separate status, and also of a separate field of search.
> **(C) A different field of search** : Where it is necessary to search for one of the **>inventions in a manner that is not likely to result in finding art pertinent to the other invention(s) (e.g., searching different classes /subclasses or electronic resources, or employing different search queries<, a different field of search is shown, even though the two are classified together. The indicated different field of search must in fact be pertinent to the type of subject matter covered by the claims. Patents need not be cited to show different fields of search.

Finally, M.P.E.P. § 811 states in part:

> a restriction requirement "will normally< be made before any action upon the merits; **however, it may be made at any time before final action** **." This means the examiner should make a proper requirement as early as possible in the prosecution, in the first action if possible, otherwise, as soon as the need for a proper requirement develops.

Contrary to Applicant's remarks that the language of the amended claims is "identical to" or "closely mirrors" the language previously searched and examined, an analysis of the restriction requirement (before the Applicant) shows the Examiner appears to have met the necessary criteria required (M.P.E.P. 803 and 808) by providing reasons for the claimed invention, defined by Groups I – V, as distinct (i.e. "subcombinations useable together") and has established burden, in accordance with M.P.E.P. 808.02, i.e. defined the inventions as having "acquired a separate status in the art as shown by their different classification", as identified in the Office action. Thus the November 1, 2005 Office action sets forth the necessary criteria and to define a proper restriction requirement, and was set forth prior to final action, in accordance with the M.P.E.P. and current office practice.

Species Election

Second, an analysis with respect to the Election of Species under 35 USC 121, set forth by the Examiner in the Office action mailed November 1, 2005, will be proffered:

37 CFR §1.146 states:

> ***In the first action*** [emphasis added] on an application containing a generic claim to a generic invention (genus) and claims to more than one patentably distinct species embraced thereby, the examiner may require the applicant in the reply to that action to elect a species of his or her invention to which his or her claim will be restricted if no claim to the genus is found to be allowable. However, if such application contains claims directed to more than a reasonable number of species, the examiner may require restriction of the claims to not more than a reasonable number of species before taking further action in the application.

M.P.E.P. § 806.03 (Single Embodiment, Claims Defining Same Essential Features) states in part:

> **Where the claims of an application define the same essential characteristics of a single disclosed embodiment of an invention, restriction therebetween should never be required.** This is because the claims are *>not directed to distinct inventions; rather they are< different definitions of the same disclosed subject matter, varying in breadth or scope of definition.

M.P.E.P. § 706.07(e) (Withdrawal of Final Rejection - General) states:
When a final rejection is withdrawn, all amendments filed after the final rejection are ordinarily entered.

Note, the species election of November 1, 2005 was presented to the Applicant by the Examiner subsequent to the first office action, non-final rejection (of all pending claims) of February 9, 2005. In addition, and consistent with Petitioner's remarks, the limitations identified by the Examiner in Species A-C appear to have been presented in the original claims, which included a complete action on the merits. Thus, and in accordance with M.P.E.P. §806.03 and 37 CFR §1.146, the species election appears to be improper and extraneous. Since Applicant elected Group I, which included the species election (i.e. election of Species A), the restriction requirement including the species election is deemed to be improper.

CONCLUSION

The petition is **GRANTED**. The election/restriction requirement of November 1, 2005 is hereby **WITHDRAWN**.

The application is being forwarded to the Tech. Support Staff to **WITHDRAW** the finality and for **ENTRY** of the amendment filed May 26, 2006, in accordance with MPEP § 706.07(e). Thereafter, the application will be forwarded to the Examiner to reopen prosecution and appropriate action i.e. prosecution of the pending claims consistent with this decision.

Any inquiries related to this decision may be directed to the undersigned at (571) 272-3595.

Brian L. Johnson, SPRE
Technology Center 2100
Computer Architecture, Software, and Information Security

SPE RESPONSE FOR CERTIFICATE OF CORRECTION

Paper No.:20091109

DATE : November 09, 2009

TO SPE OF : ART UNIT 2121

SUBJECT : Request for Certificate of Correction on Patent No.: 7353071

A response is requested with respect to the accompanying request for a certificate of correction.

Please complete this form and return with file, within **7** days to:
Certificates of Correction Branch - ST (South Tower) 9A22
Palm location **7590** - Tel. No. (703) 305-8309

With respect to the change(s) requested, correcting Office and/or Applicant's errors, should the patent read as shown in the certificate of correction? No new matter should be introduced, nor should the scope or meaning of the claims be changed.

Thank You For Your Assistance **Certificates of Correction Branch**

The request for issuing the above-identified correction(s) is hereby:

Note your decision on the appropriated box.

☒ **Approved** All changes apply.

☐ **Approved in Part** Specify below which changes **do not** apply.

☐ **Denied** State the reasons for denial below.

Comments:

SPE RESPONSE FOR CERTIFICATE OF CORRECTION

Paper No.:20091109

DATE : November 09, 2009

TO SPE OF : ART UNIT 2121

SUBJECT : Request for Certificate of Correction on Patent No.: 7353071 /S/N. 09/870418

A response is requested with respect to the accompanying request for a certificate of correction.

Please complete this form and return with file, within **7** days to:
Certificates of Correction Branch - ST (South Tower) 9A22
Palm location **7590** - Tel. No. (703) 305-8309

With respect to the change(s) requested, correcting Office and/or Applicant's errors, should the patent read as shown in the certificate of correction? No new matter should be introduced, nor should the scope or meaning of the claims be changed.

Thank You For Your Assistance

Magdalena Talley
Certificates of Correction Branch

The request for issuing the above-identified correction(s) is hereby:

Note your decision on the appropriated box.

☒ **Approved** — All changes apply.

☐ **Approved in Part** — Specify below which changes **do not** apply.

☐ **Denied** — State the reasons for denial below.

Comments:

/Albert DeCady/
Supervisory Patent Examiner, Art Unit 2121

UNITED STATES PATENT AND TRADEMARK OFFICE

COMMISSIONER FOR PATENTS
UNITED STATES PATENT AND TRADEMARK OFFICE
WASHINGTON, D.C. 20231
www.uspto.gov

Paper No. 10

FULBRIGHT & JAWORSKI
666 FIFTH AVENUE
NEW YORK, NY 10103-3198

COPY MAILED

JUL 2 9 2002

OFFICE OF PETITIONS

In re Application of	:	
Adilson Leite	:	
Application No. 09/870,498	:	ON PETITION
Filed: June 1, 2001	:	
Attorney Docket No. FAPESP 203 NDH/MAS	:	

This is a decision on the petition under 37 CFR 1.137(b), filed June 21, 2002, to revive the above-identified application.

The petition is **GRANTED**.

The above-identified application became abandoned for failure to reply in a timely manner to the Notice to File Missing Parts of Application (Notice) mailed August 1, 2001. The Notice set a period for reply of two (2) months from the mail date of the Notice. No extensions of time under the provisions of 37 CFR 1.136(a) were obtained. Accordingly, the above-identified application became abandoned on October 2, 2001.

An extension of time under 37 CFR 1.136 must be filed prior to the expiration of the maximum extendable period for reply. See In re Application of S., 8 USPQ2d 1630, 1631 (Comm'r Pats. 1988). Accordingly, since the $1,440.00 extension of time submitted on May 9, 2002 was subsequent to the maximum extendable period for reply, this fee is unnecessary and will be credited to petitioner's deposit account.

The file does not indicate a change of address has been submitted, although the address given on the petition differs from the address of record. If appropriate, a change of address should be filed in accordance with MPEP 601.03. A courtesy copy of this decision is being mailed to the address given on the petition; however, the Office will mail all future correspondence solely to the address of record.

Telephone inquiries concerning this decision should be directed to Wan Laymon at (703) 305-9282.

The application file is being forwarded to the Office of Initial Patent Examination.

Wan Laymon

Wan Laymon
Petitions Examiner
Office of Petitions
Office of the Deputy Commissioner
for Patent Examination Policy

cc: FULBRIGHT & JAWORSKI
801 PENNSYLVANIA AVENUE N W
WASHINGTON, DC 20004

UNITED STATES PATENT AND TRADEMARK OFFICE

#14

COMMISSIONER FOR PATENTS
UNITED STATES PATENT AND TRADEMARK OFFICE
P.O. BOX 1450
ALEXANDRIA, VA 22313-1450
www.uspto.gov

FEB 2 2004

FULBRIGHT & JAWORSKI, LLP
666 FIFTH AVE
NEW YORK NY 10103-3198

In re Application of	:
Adilson Leite et al	:
Serial No.: 09/870,498	: PETITION DECISION
Filed: June 1, 2001	:
Attorney Docket No.: FAPESP203	:

This is in response to the petition under 37 CFR 1.181, filed November 4, 2003, for withdrawal of abandonment of the above identified application based on filing of a timely reply.

A review of the file history shows that the examiner mailed an Office action to applicants on April 18, 2003, setting a three month shortened statutory period for reply. A Notice of Abandonment was mailed to applicants on October 27, 2003, when a reply was not timely filed. Applicants state that a reply was filed on July 2, 2003 followed by a supplemental reply on July 18, 2003, as evidenced by Office date stamped return postcards for each reply. In view of the timely reply the Notice of Abandonment was mailed in error and is withdrawn and the application is restored to pending status with the mailing of this decision

The petition is **GRANTED**.

The application will be forwarded to the examiner for further action.

Should there be any questions about this decision please contact William R. Dixon, Jr., by letter addressed to Director, TC 1600, at the address listed above, or by telephone at 571-272-0519 or by facsimile sent to the general Office facsimile number.

Bruce M. Kisliuk
Director, Technology Center 1600

UNITED STATES PATENT AND TRADEMARK OFFICE

COMMISSIONER FOR PATENTS
UNITED STATES PATENT AND TRADEMARK OFFICE
P.O. BOX 1450
ALEXANDRIA, VA 22313-1450
www.uspto.gov

Paper No.

FULBRIGHT & JAWORSKI, LLP
666 FIFTH AVE
NEW YORK NY 10103-3198

COPY MAILED
SEP 2 9 2004
OFFICE OF PETITIONS

In re Application of
Adilson Leite, et al. :
Application No. 09/870,498 : ON PETITION
Filed: June 1, 2001 :
Attorney Docket No. FAPESP 203 :

This is a decision on the petition under 37 CFR 1.313(c)(2) to withdraw the above-identified application from issue after payment of the issue fee, filed September 23, 2004.

The petition is **GRANTED**.

The above-identified application is withdrawn from issue for consideration of a submission under 37 CFR 1.114 (request for continued examination). See 37 CFR 1.313(c)(2).

Petitioner is advised that the issue fee paid June 16, 2004, in the above-identified application cannot be refunded. If, however, the above-identified application is again allowed, petitioner may request that it be applied towards the issue fee required by the new Notice of Allowance. [1]

Telephone inquiries relating to this decision should be directed to the undersigned at (703) 305-9220.

After the application is received in the Office of Petitions, the file will be forwarded to Technology Center AU 1654 for further processing of the request for continued examination under 37 CFR 1.114 filed September 23, 2004.

Sherry D. Brinkley
Petitions Examiner
Office of Petitions
Office of the Deputy Commissioner
for Patent Examination Policy

[1]The request to apply the issue fee to the new Notice may be satisfied by completing and returning the new Issue Fee Transmittal Form PTOL-85(b), which includes the following language thereon: "Commissioner for Patents is requested to apply the Issue Fee and Publication Fee (if any) or re-apply any previously paid issue fee to the application identified above." Petitioner is advised that, whether a fee is indicated as being due or not, the Issue Fee Transmittal Form **must** be completed and timely submitted to avoid abandonment. Note the language in bold text on the first page of the Notice of Allowance and Fee(s) Due (PTOL-85).

UNITED STATES PATENT AND TRADEMARK OFFICE

0 4 FEB 2009

Commissioner for Patents
United States Patent and Trademark Office
P.O. Box 1450
Alexandria, VA 22313-1450
www.uspto.gov

GODWIN PROCTOR LLP
181 Lytton Avenue
Palo Alto, California 94301

In re Application of: GURNEY, Austin, L.	:	
U.S. Application No.: 09/870,574	:	DECISION ON PETITION
U.S. Patent No.: 6,551,799	:	
Filing Date: May 30, 2001	:	
Atty Docket No.: 39766-0306R1	:	
For: INTERLEUKIN-22 POLYPEPTIDES, NUCLEIC ACIDS ENCODING THE SAME AND METHODS FOR THE TREATMENT OF PANCREATIC DISORDERS	:	

This is a decision on the "Petition To Accept Unintentionally Delayed Claim For 35 U.S.C. 120; Benefit Of A Prior Application(s) Under 37 CFR 1.78(a)(3)" filed 25 March 2008. The required petition fee has been paid.

The petition is **DISMISSED**.

The above-captioned U.S. patent issued from an application filed after November 29, 2000, and the claim herein for the benefit of priority to the prior-filed international applications is submitted after the expiration of the time period specified in 37 CFR 1.78(a)(2)(ii). Accordingly, the present application is properly considered under 37 CFR 1.78(a)(3). See MPEP section 1481.03.

A petition under 37 CFR 1.78(a)(3) must be accompanied by:

(1) the reference required by 35 U.S.C. 120 and 37 CFR 1.78(a)(2)(i) to the prior-filed application, unless previously submitted;
(2) the surcharge set forth in 37 CFR 1.17(t); and
(3) a statement that the entire delay between the date the claim was due under 37 CFR 1.78(a)(2)(ii) and the date the claim was filed was unintentional. The Director may require additional information where there is a question whether the delay was unintentional.

The present petition fails to comply with item (1) above.

37 CFR 1.78(a)(2)(iii) states that the required reference to the prior-filed application(s) "must be included in an application data sheet (37 CFR 1.76) or the specification must be

amended to contain such reference in the first sentence(s) following the title." Petitioner has not provided an accompanying amendment to the specification of the application or an ADS. Accordingly, petitioner has not provided the reference to the prior-filed applications in the form required by 37 CFR 1.78. Moreover, it is noted that even if the petitioner included an amendment or ADS consistent with the Certificate of Correction, the petition could not be granted. This is because PCT/US00/23328 does not contain the specific reference required under 37 CFR 1.78(a)(2) to PCT/US00/14042, i.e., the later filed PCT application does not identify the relationship (CIP) to the prior-filed PCT application. See MPEP section 201.11(III)(C) (emphasis added):

> The reference to the prior applications must identify all of the prior applications and indicate the relationship (i.e., continuation, divisional, or continuation-in-part) between each nonprovisional application in order to establish copendency throughout the entire chain of prior applications. **Appropriate references must be made in each intermediate application in the chain of prior applications.** If an applicant desires, for example, the following benefit claim: "this application is a continuation of Application No. C, filed ---, which is a continuation of Application No. B, filed ---, which claims the benefit of provisional Application No. A, filed ---," then Application No. C must have a reference to Application No. B and provisional Application No. A, and Application No. B must have a reference to provisional Application No. A.

Further correspondence with respect to this matter should be addressed as follows:

By mail: Mail Stop PCT Legal Administration
Commissioner for Patents
Post Office Box 1450
Alexandria, VA 22313-1450

By hand: Customer Service Window
Mail Stop PCT Legal Administration
Randolph Building
401 Dulany Street
Alexandria, VA 22314

By fax: (571) 273-8300
ATTN: Office of PCT Legal Administration

Any questions concerning this matter may be directed to Richard M. Ross at (571) 272-3296.

Boris Milef
Legal Examiner
Office of PCT Legal Administration

UNITED STATES PATENT AND TRADEMARK OFFICE

3 1 JUL 2009

Commissioner for Patents
United States Patent and Trademark Office
P.O. Box 1450
Alexandria, VA 22313-1450
www.uspto.gov

GOODWIN PROCTOR LLP
181 Lytton Avenue
Palo Alto, California 94301

In re Application of: GURNEY, Austin, L.	:	
U.S. Application No.: 09/870,574	:	DECISION ON RENEWED PETITION
U.S. Patent No.: 6,551,799	:	
Filing Date: May 30, 2001	:	
Atty Docket No.: 39766-0306R1	:	
For: INTERLEUKIN-22 POLYPEPTIDES, NUCLEIC ACIDS ENCODING THE SAME AND METHODS FOR THE TREATMENT OF PANCREATIC DISORDERS	:	

This decision is issued in response to the "Request For Reconsideration Of A Decision On A Petition To Accept Unintentionally Delayed Claim For 35 U.S.C. 120 Benefit Of A Prior Application(s)" filed May 29, 2009, treated herein as a renewed petition seeking acceptance of an unintentionally delayed claim under 35 U.S.C. § 120 for the benefit of the prior-filed international applications identified in the previously filed "Request For Certificate Of Correction."

The renewed petition is **DISMISSED** without prejudice.

The decision mailed herein on February 04, 2009 dismissed applicant's original petition under 37 CFR 1.78(a)(3) based on the following: (1) petitioner had not provided an accompanying amendment to the specification of the application or an ADS containing a proper reference to the prior-filed applications;[1] and (2) even if the petitioner included the required amendment or ADS consistent with the Certificate of Correction, the petition could not be granted because PCT/US00/23328 did not contain the specific reference required under 37 CFR 1.78(a)(2) to PCT/US00/14042, i.e., the later filed PCT application did not identify the relationship (continuation-in-part) to the prior-filed PCT application.

On 29 May 2009, applicants filed a petition under 37 CFR 1.182 in international application PCT/US00/23328 to add therein the required reference to the prior-filed international application, PCT/US00/14042. In a decision mailed on 17 July 2009 in PCT/US00/23328, the petition under 37 CFR 1.182 was granted. Accordingly, PCT/US00/23328 now contains the required reference indicating that such application is a continuation-in-part of PCT/US00/14042. However, the present renewed petition again fails to be accompanied by an amendment to the

[1] As noted in the previous decision, 37 CFR 1.78(a)(2)(iii) states that the required reference to the prior-filed application(s) "must be included in an application data sheet (37 CFR 1.76) or the specification must be amended to contain such reference in the first sentence(s) following the title."

first line of the specification following the title, or an ADS containing a proper reference to the prior-filed applications that is consistent with the reference applicants seek to add in the Certificate of Correction. The final element of a grantable petition under 37 CFR 1.78(a)(3) therefore remains unsatisfied on the present record.

Before the present petition under 37 CFR 1.78(a)(3) can be granted, applicants must submit herein a second renewed petition accompanied by an amendment to the first line of the specification following the title, or an ADS, containing an acceptable reference to the prior-filed applications that is consistent with the reference applicants seek to add in the Certificate of Correction. No additional petition fee is required.

Further correspondence with respect to this matter should be addressed as follows:

By mail: Mail Stop PCT Legal Administration
Commissioner for Patents
Post Office Box 1450
Alexandria, VA 22313-1450

By hand: Customer Service Window
Mail Stop PCT Legal Administration
Randolph Building
401 Dulany Street
Alexandria, VA 22314

By fax: (571) 273-8300
ATTN: Office of PCT Legal Administration

Electronically: Via EFS-Web

Any questions concerning this matter may be directed to Richard M. Ross at (571) 272-3296.

Bryan Lin

Bryan Lin
Legal Examiner
Office of Petitions and PCT Legal Administration

UNITED STATES PATENT AND TRADEMARK OFFICE

Commissioner for Patents
United States Patent and Trademark Office
P.O. Box 1450
Alexandria, VA 22313-1450
www.uspto.gov

REED SMITH LLP
3110 FAIRVIEW PARK DRIVE, SUITE 1400
FALLS CHURCH, VA 22042

COPY MAILED

NOV 30 2004

OFFICE OF PETITIONS

In re Application of
Watanabe, et al.
Application No. 09/870,630
Filed: June 1, 2001
Atty Docket No. NITT.0017

: DECISION ON PETITION
: UNDER 37 CFR 1.78(a)(3)

This is a decision on the petition under 37 CFR 1.78(a)(3), filed on September 27, 2004, to accept an unintentionally delayed claim under 35 U.S.C. § 120 for the benefit of priority to the prior-filed nonprovisional application set forth in the amendment filed concurrently with the instant petition.

The petition is **GRANTED**.

A petition for acceptance of a claim for late priority under 37 CFR 1.78(a)(3) is only applicable to those applications filed on or after November 29, 2000. Further, the petition is appropriate only after the expiration of the period specified in 37 CFR 1.78(a)(2)(ii). In addition, the petition under 37 CFR 1.78(a)(3) must be accompanied by:

> **(1)** the reference required by 35 U.S.C. § 120 and 37 CFR 1.78(a)(2)(i) of the prior-filed application(s), unless previously submitted;[1]
> **(2)** the surcharge set forth in § 1.17(t); and
> **(3)** a statement that the entire delay between the date the claim was due under 37 CFR 1.78(a)(2)(ii) and the date the claim was filed was unintentional. The Commissioner may require additional information where there is a question whether the delay was unintentional.

The instant pending application was filed on June 1, 2001, and was pending at the time of filing of the instant petition. A reference to the prior-filed nonprovisional application has been

[1] Any nonprovisional application or international application designating the United States of America claiming the benefit of one or more prior-filed copending applications or international applications designating the United States of America must contain or be amended to contain a reference (amendment to the first line of the specification following the title or in an application data sheet (ADS) to each such prior-filed application, identifying it by application number (consisting of the series code and serial number) or international application number and international filing date filing date and indicating the relationship of the applications. Cross references to other related applications may be made when appropriate (*see* § 1.14).

included in an amendment to the first sentence of the specification following the title, as required by 37 CFR 1.78(a)(2)(iii).

Accordingly, having found that the instant petition for acceptance of an unintentionally delayed claim for the benefit of priority under 35 U.S.C. § 120 to the prior-filed nonprovisional application satisfies the conditions of 37 CFR 1.78(a)(3), the petition is granted.

A corrected Filing Receipt, which includes the priority claim to the prior-filed nonprovisional application, accompanies this decision on petition.

The granting of the petition to accept the delayed benefit claim to the prior-filed application(s) under 37 CFR 1.78(a)(3) should not be construed as meaning that the instant application is entitled to the benefit of the prior-filed application(s). In order for the instant application to be entitled to the benefit of the prior-filed application(s), all other requirements under 35 U.S.C. § 120 and 37 CFR 1.78(a)(1) and (a)(2) must be met. Similarly, the fact that the corrected Filing Receipt accompanying this decision on petition includes the prior-filed application should not be construed as meaning that applicant is entitled to the claim for benefit of priority to the prior-filed application noted thereon. Accordingly, the examiner will, in due course, consider this benefit claim and determine whether the instant application is entitled to the benefit of the earlier filing date.

Since the fee for treatment of this petition is $1330, the $130 overpaid is being credited to counsel's deposit account.

Telephone inquiries related to this decision should be directed to Sherry D. Brinkley at (571) 272-3204.

This application is being forwarded to Technology Center Art Unit 2112 for consideration by the Examiner of the amendment filed September 27, 2004, including applicant's claim under 35 U.S.C. § 120 and 37 CFR 1.78(a)(1) and (2) for the benefit of priority to the prior-filed nonprovisional application.

Sherry D. Brinkley
Petitions Examiner
Office of Petitions
Office of the Deputy Commissioner
for Patent Examination Policy

Frances M. Hicks
Lead Petitions Examiner
Office of Petitions
Office of the Deputy Commissioner
for Patent Examination Policy

ATTACHMENT: Corrected Filing Receipt

UNITED STATES PATENT AND TRADEMARK OFFICE

COMMISSIONER FOR PATENTS
UNITED STATES PATENT AND TRADEMARK OFFICE
P.O. BOX 1450
ALEXANDRIA, VA 22313-1450
www.uspto.gov

MAILED

APR 03 2006

Technology Center 2100

WU HSIANG MIN
P.O. BOX 82-144
TAIPEI TW TAIWAN

In re Application of: Hsiang Min WU	)	
Application No. 09/870,633	)	**DECISION ON PETITION TO**
Attorney Docket No. NONE	)	**WITHDRAW HOLDING OF**
Filed: June 1, 2001	)	**ABANDONMENT UNDER 37 CFR**
For: METHOD OF VIDEO DISPLAYING	)	**§1.181**
FOR E-MAILS	)	
	)	

This is a decision on the petition, filed March 25, 2005 requesting the Withdrawal of the Holding of Abandonment of the above-identified application, under 37 CFR §1.181. The instant application was held abandoned for failure to timely pay respond to the first Office action (non-final) mailed December 8, 2003. A Notice of Abandonment was mailed on March 24, 2006.

According to the MPEP §711.03(c), the showing required to establish non-receipt of an Office action includes the following:

1) a statement from practitioner that the Office action was not received,
2) a statement from practitioner that the file jacket and docket records were searched,
3) a copy of the docket record at the address of record, and
4) a reference to the docket record in the practitioner's statement.

In support of the petition, applicants' representative provides a statement that the non-final Office action, mailed December 8, 2003, was not received and that a search of the file jacket and document records has been performed. Petitioner has also submitted a copy of the docket record at the address of record as well as a reference to the docket record in practitioner's statement.

Petitioner has established non-receipt of the Office action according to the requirements set forth above. Accordingly, the petition is **GRANTED**.

The application is being forwarded to the Supervisory Legal Instruments Examiner with instructions to **WITHDRAW** the holding of abandonment and restore the instant application to pending status, before **REDATING** and **REMAILING** the non-final Office action to the applicant.

Brian L. Johnson
Special Programs Examiner
Technology Center 2100, Computer Architecture, Software, and Information Security

Under the Paperwork Reduction Act of 1995, no persons are required to respond to a collection of information unless it displays valid OMB control number.

PETITION TO ACCEPT UNINTENTIONALLY DELAYED PAYMENT OF MAINTENANCE FEE IN AN EXPIRED PATENT (37 CFR 1.378(c))

Patent Number	Issue Date (YYYY-MM-DD)	Application Number	Filing Date (YYYY-MM-DD)	Docket Number (if applicable)
6634825	2003-10-21	09/870,645	2001-06-01	204429USMF

CAUTION: Maintenance fee (and surcharge, if any) payment must correctly identify: (1) the patent number and (2) the application number of the actual U.S. application leading to issuance of that patent to ensure the fee(s) is/are associated with the correct patent. 37 CFR 1.366(c) and (d).

SMALL ENTITY
☐ Patentee claims, or has previously claimed, small entity status. See 37 CFR 1.27.

LOSS OF ENTITLEMENT TO SMALL ENTITY STATUS
☐ Patentee is no longer entitled to small entity status. See 37 CFR 1.27(g)

NOT Small Entity		Small Entity	
Fee	Code	Fee	Code
◉ 3 ½ year	(1551)	○ 3 ½ year	(2551)
○ 7 ½ year	(1552)	○ 7 ½ year	(2552)
○ 11 ½ year	(1553)	○ 11 ½ year	(2553)

SURCHARGE
The surcharge required by 37 CFR 1.20(i)(2) (Fee Code 1558) must be paid as a condition of accepting unintentionally delayed payment of the maintenance fee.

MAINTENANCE FEE (37 CFR 1.20(e)-(g))
The appropriate maintenance fee must be submitted with this petition.

STATEMENT
THE UNDERSIGNED CERTIFIES THAT THE DELAY IN PAYMENT OF THE MAINTENANCE FEE TO THIS PATENT WAS UNINTENTIONAL

PETITIONER(S) REQUEST THAT THE DELAYED PAYMENT OF THE MAINTENANCE FEE BE ACCEPTED AND THE PATENT REINSTATED

THIS PORTION MUST BE COMPLETED BY THE SIGNATORY OR SIGNATORIES

37 CFR 1.378(d) states: "Any petition under this section must be signed by an attorney or agent registered to practice before the Patent and Trademark Office, or by the patentee, the assignee, or other party in interest."

I certify, in accordance with 37 CFR 1.4(d)(4) that I am

◉ An attorney or agent registered to practice before the Patent and Trademark Office

○ A sole patentee

○ A joint patentee; I certify that I am authorized to sign this submission on behalf of all the other patentees.

○ A joint patentee; all of whom are signing this e-petition

○ The assignee of record of the entire interest

Patent Practitioner			
A signature of the applicant or representative is required in accordance with 37 CFR 1.33 and 10.18. Please see 37 CFR 1.4(d) for the form of the signature			
Signature	/C. Irvin McClelland/	Date (YYYY-MM-DD)	2008-02-14
Name	C. Irvin McClelland	Registration Number	21124

This collection of information is required by 37 CFR 1.378(c). The information is required to obtain or retain a benefit by the public which is to file (and by the USPTO to process) an application. Confidentiality is governed by 35 U.S.C. 122 and 37 CFR 1.11 and 1.14. This collection is estimated to take 1 hour to complete, including gathering, preparing, and submitting the completed application form to the USPTO. Time will vary depending upon the individual case. Any comments on the amount of time you require to complete this form and/ or suggestions for reducing this burden, should be sent to the Chief Information Officer, U.S. Patent and Trademark Office, U.S. Department of Commerce, P.O. Box 1450, Alexandria, VA 22313-1450. DO NOT SEND FEES OR COMPLETED FORMS TO THIS ADDRESS. **This form can only be used when in conjunction with EFS-Web. If this form is mailed to the USPTO, it may cause delays in reinstating the patent.**

Privacy Act Statement

The Privacy Act of 1974 (P.L. 93-579) requires that you be given certain information in connection with your submission of the attached form related to a patent application or patent. Accordingly, pursuant to the requirements of the Act, please be advised that: (1) the general authority for the collection of this information is 35 U.S.C. 2(b)(2); (2) furnishing of the information solicited is voluntary; and (3) the principal purpose for which the information is used by the U.S. Patent and Trademark Office is to process and/or examine your submission related to a patent application or patent. If you do not furnish the requested information, the U.S. Patent and Trademark Office may not be able to process and/or examine your submission, which may result in termination of proceedings or abandonment of the application or expiration of the patent.

The information provided by you in this form will be subject to the following routine uses:

1. The information on this form will be treated confidentially to the extent allowed under the Freedom of Information Act (5 U.S.C. 552) and the Privacy Act (5 U.S.C. 552a). Records from this system of records may be disclosed to the Department of Justice to determine whether the Freedom of Information Act requires disclosure of these record s.

2. A record from this system of records may be disclosed, as a routine use, in the course of presenting evidence to a court, magistrate, or administrative tribunal, including disclosures to opposing counsel in the course of settlement negotiations.

3. A record in this system of records may be disclosed, as a routine use, to a Member of Congress submitting a request involving an individual, to whom the record pertains, when the individual has requested assistance from the Member with respect to the subject matter of the record.

4. A record in this system of records may be disclosed, as a routine use, to a contractor of the Agency having need for the information in order to perform a contract. Recipients of information shall be required to comply with the requirements of the Privacy Act of 1974, as amended, pursuant to 5 U.S.C. 552a(m).

5. A record related to an International Application filed under the Patent Cooperation Treaty in this system of records may be disclosed, as a routine use, to the International Bureau of the World Intellectual Property Organization, pursuant to the Patent Cooperation Treaty.

6. A record in this system of records may be disclosed, as a routine use, to another federal agency for purposes of National Security review (35 U.S.C. 181) and for review pursuant to the Atomic Energy Act (42 U.S.C. 218(c)).

7. A record from this system of records may be disclosed, as a routine use, to the Administrator, General Services, or his/her designee, during an inspection of records conducted by GSA as part of that agency's responsibility to recommend improvements in records management practices and programs, under authority of 44 U.S.C. 2904 and 2906. Such disclosure shall be made in accordance with the GSA regulations governing inspection of records for this purpose, and any other relevant (i.e., GSA or Commerce) directive. Such disclosure shall not be used to make determinations about individuals.

8. A record from this system of records may be disclosed, as a routine use, to the public after either publication of the application pursuant to 35 U.S.C. 122(b) or issuance of a patent pursuant to 35 U.S.C. 151. Further, a record may be disclosed, subject to the limitations of 37 CFR 1.14, as a routine use, to the public if the record was filed in an application which became abandoned or in which the proceedings were terminated and which application is referenced by either a published application, an application open to public inspections or an issued patent.

9. A record from this system of records may be disclosed, as a routine use, to a Federal, State, or local law enforcement agency, if the USPTO becomes aware of a violation or potential violation of law or regulation.

UNITED STATES PATENT AND TRADEMARK OFFICE

Commissioner for Patents
United States Patent and Trademark Office
P.O. Box 1450
Alexandria, VA 22313-1450
www.uspto.gov

In re Patent No. 6634825
Issue Date: October 21,2003
Application No. 09870645
Filed: June 1,2001
Attorney Docket No. 204429US-6X

:
:DECISION GRANTING PETITION
:UNDER 37 CFR 1.378(c)
:

This is a decision on the electronic petition, filed February 14,2008 ,under 37 CFR 1.378(c) to accept the unintentionally delayed payment of the 3.5 year maintenance fee for the above-identified patent.

The petition is GRANTED.

The maintenance fee is accepted, and the above-identified patent reinstated as of February 14,2008 . This decision also constitutes notice that the fee has been accepted. An electronic copy of the petition and this decision has been created as an entry in an Image File Wrapper. Nevertheless, petitioner should print and retain an independent copy

Telephone inquires related to this electronic decision should be directed to the Electronic Business Center at 1-866-217-9197.

SPE RESPONSE FOR CERTIFICATE OF CORRECTION

Paper No.: _____

DATE : 12/08/05

TO SPE OF : ART UNIT ~~2674~~ 2629

SUBJECT : Request for Certificate of Correction on Patent No.: 09/870698 6919880

A response is requested with respect to the accompanying request for a certificate of correction.

Please complete this form and return with file, within **7** days to:
Palm location **7580, Certificates of Correction Branch – South Tower – 9A22**
If response is for an IFW, **return to employee (named below) via PUBSCofC Team in MADRAS.**
With respect to the change(s) requested, correcting Office and/or Applicant's errors, should the patent read as shown in the certificate of correction (COCIN)? No new matter should be introduced, nor should the scope or meaning of the claims be changed.

Thank You For Your Assistance

Angela Green
Certificates of Correction Branch
Tel. No. 703-305-9380 ext. 123

The request for issuing the above-identified correction(s) is hereby:
Note your decision on the appropriate box.

☒ **Approved**	**All** changes apply.
☐ **Approved in Part**	Specify below which changes **do not** apply.
☐ **Denied**	State the reasons for denial below.

Comments:

RICHARD HJERPE 7/1/06
SUPERVISORY PATENT EXAMINER
TECHNOLOGY CENTER 2600

SPE — **Art Unit** 2629

Cofc

Attorney Docket No. 204694.00070 PATENT APPLICATION

OIPE IAP13 NOV 29 2005 PATENT & TRADEMARK OFFICE

IN THE UNITED STATES PATENT AND TRADEMARK OFFICE

In re Application of:	Examiner: Kimnhung T. Nguyen
GERALD MORRISON, ET AL.	Group Art Unit: 2674
Patent No.: 6,919,880	
Issue Date: July 19, 2005	
Application No.: 09/870,698	Confirmation No.: 1792
Filed: June 1, 2001	
For: **CALCULATING CAMERA OFFSETS TO FACILITATE OBJECT POSITION DETERMINATION USING TRIANGULATION**	November 29, 2005

Certificate
DEC 0 2 2005
of Correction

Certificate of Corrections
Commissioner for Patents
P.O. Box 1450
Alexandria, Virginia 22313-1450

CERTIFICATE OF CORRECTION
UNDER RULE 323

Sir:

It is respectfully requested that a Certificate of Correction be issued by the Patent and Trademark Office due to mistakes of a clerical, typographical, or minor character. While most of the errors were the fault of the Office, at least one was not. Therefore, this request is being made under Rule 323.

11/30/2005 CNGUYEN 00000033 501710 6919880
01 FC:1811 100.00 DA

Approved by Examiner
KN
6/27/06

DEC 5 2005

Please charge the $100.00 statutory fee for this Certificate of Correction to Deposit Account No. 50-1710. Also, the Commissioner is authorized to charge any additional fees deemed appropriate and make any refunds to the same Deposit Account. A duplicate copy of the proposed Certificate of Correction is enclosed.

Patentees' undersigned attorney may be reached in our Washington, D.C. office by telephone at (202) 625-3500. All correspondence should continue to be directed to our address given below.

Respectfully submitted,

Attorney for Patentees
Richard P. Bauer
Registration No. 31,588

PATENT ADMINISTRATOR
KATTEN MUCHIN ROSENMAN LLP
525 West Monroe Street
Chicago, Illinois 60661-3693
Facsimile: (312) 902-1061

DEC 5 2005

UNITED STATES PATENT AND TRADEMARK OFFICE
CERTIFICATE OF CORRECTION

PATENT NO: 6,919,880

ISSUED: July 19, 2005

INVENTOR(S): Gerald Morrison and David Holmgren

It is certified that errors appear in the above-mentioned patent and that said Letters Patent is hereby corrected as shown below:

On the Cover Page, in the Title, " (54) CALIBRATING CAMERA OFFSETS TO FACILITATE OBJECT POSITION DETERMINATION USING TRIANGULATION" should read -- (54) CALCULATING CAMERA OFFSETS TO FACILITATE OBJECT POSITION DETERMINATION USING TRIANGULATION--.

On the Cover Page, "(73) Assignee: Smart Technologies Inc. (CA)" should read --SMART Technologies Inc (CA).--.

On the Cover Page, in the abstract, line 9, "at least two cameras at least one location" should read --at least two cameras at at least one location--.

Column 4, line 12, "determine the position of the object" should read --determining the position of the object--.

Column 5, line 24, "the touch is system" should read --the touch system--.

Column 5, line 52, "based on CMOS digital care" should read --based on CMOS digital camera--.

Column 6, line 22, Equation (0.1), "2(x/a)tan" portion of equation needs to be part of the numerator.

Column 6, line 58, "edge of the touch surface" should read --edges of the touch surface--.

Column 8, line 5, Equation (0.16), "x_{cam}" portion of equation needs to be part of the numerator.

Mailing Address of Sender:
Patent Administrator
Katten Muchin Rosenman LLP
525 West Monroe Street
Chicago, Illinois 60661-3693
Facsimile: (312) 902-1061

Patent No: 6,919,880

DEC 5 2005

UNITED STATES PATENT AND TRADEMARK OFFICE
CERTIFICATE OF CORRECTION

PATENT NO: 6,919,880

ISSUED: July 19, 2005

INVENTOR(S): Gerald Morrison and David Holmgren

It is certified that errors appear in the above-mentioned patent and that said Letters Patent is hereby corrected as shown below:

Column 8, line 5, Equation (0.16) – "x_{cam}" portion of equation needs to be part of the numerator.

Column 8, line 65, "$A\bar{x} = \vec{b}$" should read -- $A\vec{x} = \vec{b}$ --.

Column 9, line 2, "$\bar{x} = A^{-1}\vec{b}$" should read -- $\vec{x} = A^{-1}\vec{b}$ --.

Column 9, line 20, Equation (0.20), "$A^T A\bar{x} = A^T \bar{b}$" should read -- $A^T A\vec{x} = A^T \vec{b}$ --.

Column 9, line 22, Equation (0.20), "$\bar{x} = (A^T A)^{-1} A^T \bar{b}$" should read -- $\vec{x} = (A^T A)^{-1} A^T \vec{b}$ --.

Column 9, line 26, Equation (0.21), "$\bar{x} = A^T (AA^T)^{-1} \bar{b}$" should read -- $\vec{x} = A^T (AA^T)^{-1} \vec{b}$ --.

Column 9, line 37, "when translation" should read --when triangulation--.

Column 10, line 52, "correction vector $\bar{x}$" should read --correction vector $\vec{x}$ --.

Column 10, line 54, Equation (1.5), "$\bar{x} = A^T (AA^T + I/V)^{-1} \bar{b}$" should read --
$\vec{x} = A^T (AA^T + I/V)^{-1} \vec{b}$ --.

Column 11, line 20, Equation (2.0), numerator "$y_i - y_c^{\,1}$" should read -- $y_i - y_c^{\,i}$ --.

Mailing Address of Sender:
Patent Administrator
Katten Muchin Rosenman LLP
525 West Monroe Street
Chicago, Illinois 60661-3693
Facsimile: (312) 902-1061

Patent No: 6,919,880

DEC 5 2005

UNITED STATES PATENT AND TRADEMARK OFFICE
CERTIFICATE OF CORRECTION

PATENT NO: 6,919,880

ISSUED: July 19, 2005

INVENTOR(S): Gerald Morrison and David Holmgren

It is certified that errors appear in the above-mentioned patent and that said Letters Patent is hereby corrected as shown below:

Column 14, line 62, "multiple triangular" should read --multiple triangulation--.

Column 14, lines 64-65, "device to determine offset angles of said imaging devices prior to" should read --device to determine offset angles of said imaging device prior to--.

Column 15, lines 25-26, "by determining offset angles of said imaging devices to compensate for fields of view of said imaging devices" should read --by determining offset angles of said imaging devices to compensate for fields of view of imaging devices--.

Mailing Address of Sender:
Patent Administrator
Katten Muchin Rosenman LLP
525 West Monroe Street
Chicago, Illinois 60661-3693
Facsimile: (312) 902-1061

Patent No: 6,919,880

DEC 5 2005

UNITED STATES PATENT AND TRADEMARK OFFICE
CERTIFICATE OF CORRECTION

PATENT NO: 6,919,880

ISSUED: July 19, 2005

INVENTOR(S): Gerald Morrison and David Holmgren

It is certified that errors appear in the above-mentioned patent and that said Letters Patent is hereby corrected as shown below:

In the Drawings, Figure 2, "62a" should read –60a--.
In the Drawings, Figure 2, "62b" should read –60b--.

U.S. Patent Jul. 19, 2005 Sheet 2 of 3 US 6,919,880 B2

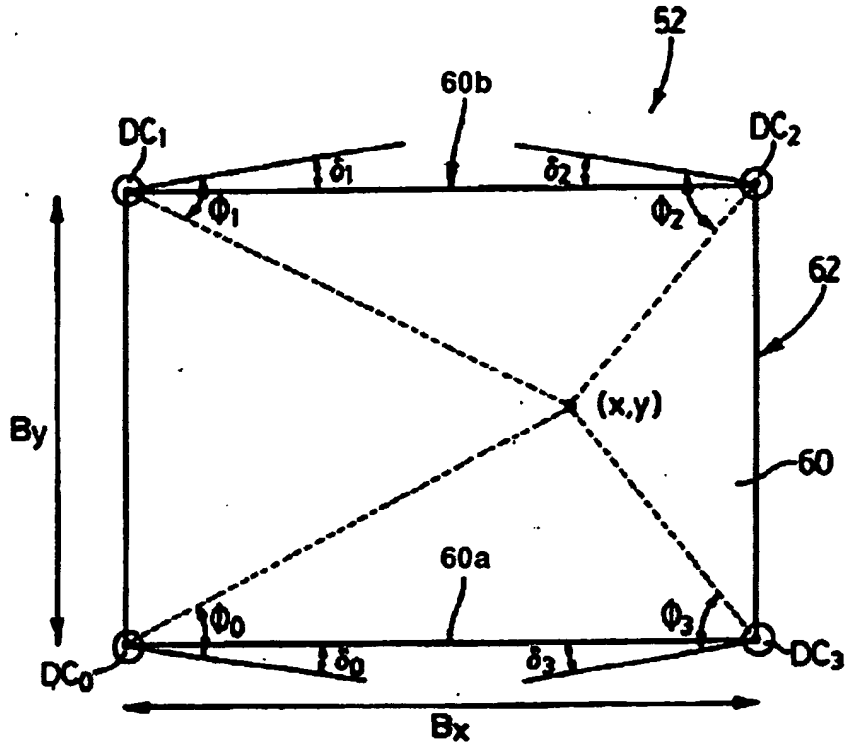

FIG. 2

Mailing Address of Sender:
Patent Administrator
Katten Muchin Rosenman LLP
525 West Monroe Street
Chicago, Illinois 60661-3693
Facsimile: (312) 902-1061

Patent No: 6,919,880

DEC 5 2005

DEC 5 2005

Doc #:WAS01 (214906-00007) 41588427v1;03/31/2005/Time:12:48
WAS01_41627109_1_204694_00070 11/28/2005 6:25 PM

UNITED STATES PATENT AND TRADEMARK OFFICE
CERTIFICATE OF CORRECTION

PATENT NO: 6,919,880

ISSUED: July 19, 2005

INVENTOR(S): Gerald Morrison and David Holmgren

It is certified that errors appear in the above-mentioned patent and that said Letters Patent is hereby corrected as shown below:

On the Cover Page, in the Representative Drawing, "62 a" should read --60a--.
On the Cover Page, in the Representative Drawing, "62 b" should read --60b--.

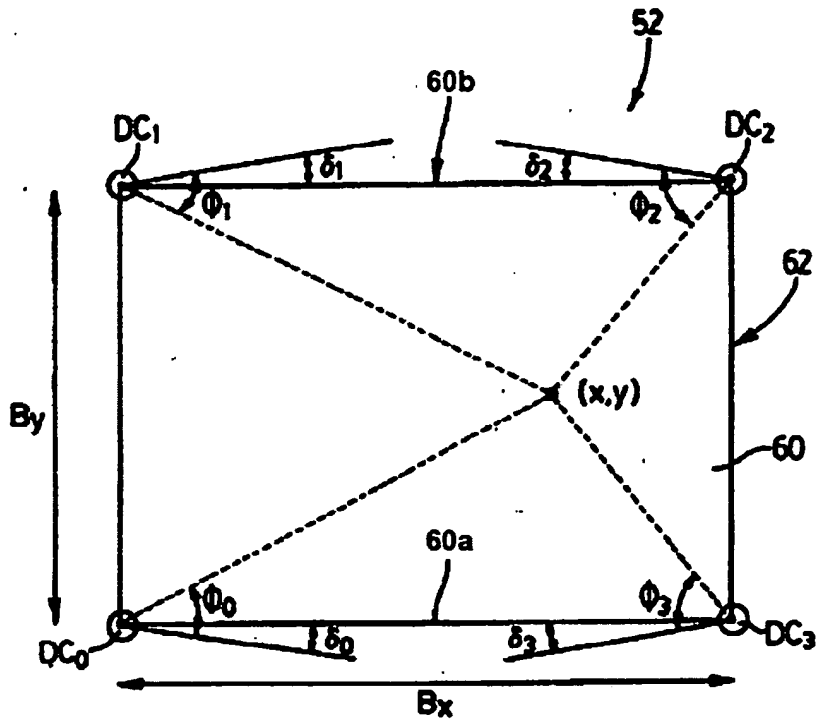

Mailing Address of Sender:
Patent Administrator
Katten Muchin Rosenman LLP
525 West Monroe Street
Chicago, Illinois 60661-3693
Facsimile: (312) 902-1061

Patent No: 6,919,880

Doc #:WAS01 (214906-00007) 41588427v1;03/31/2005/Time:12:48
WAS01_41627042_1_204694_00070 11/28/2005 6:23 PM

DEC - 5 2005

UNITED STATES PATENT AND TRADEMARK OFFICE
CERTIFICATE OF CORRECTION

PATENT NO: 6,919,880

ISSUED: July 19, 2005

INVENTOR(S): Gerald Morrison and David Holmgren

It is certified that errors appear in the above-mentioned patent and that said Letters Patent is hereby corrected as shown below:

On the Cover Page, in the Title, " (54) CALIBRATING CAMERA OFFSETS TO FACILITATE OBJECT POSITION DETERMINATION USING TRIANGULATION" should read -- (54) CALCULATING CAMERA OFFSETS TO FACILITATE OBJECT POSITION DETERMINATION USING TRIANGULATION--.

On the Cover Page, "(73) Assignee: Smart Technologies Inc. (CA)" should read --SMART Technologies Inc (CA).--.

On the Cover Page, in the abstract, line 9, "at least two cameras at least one location" should read --at least two cameras at at least one location--.

Column 4, line 12, "determine the position of the object" should read --determining the position of the object--.

Column 5, line 24, "the touch is system" should read --the touch system--.

Column 5, line 52, "based on CMOS digital care" should read --based on CMOS digital camera--.

Column 6, line 22, Equation (0.1), "2(x/a)tan" portion of equation needs to be part of the numerator.

Column 6, line 58, "edge of the touch surface" should read --edges of the touch surface--.

Column 8, line 5, Equation (0.16), "x_{cam}" portion of equation needs to be part of the numerator.

Mailing Address of Sender:
Patent Administrator
Katten Muchin Rosenman LLP
525 West Monroe Street
Chicago, Illinois 60661-3693
Facsimile: (312) 902-1061

Patent No: 6,919,880

DEC - 5 2005

UNITED STATES PATENT AND TRADEMARK OFFICE
CERTIFICATE OF CORRECTION

PATENT NO: 6,919,880

ISSUED: July 19, 2005

INVENTOR(S): Gerald Morrison and David Holmgren

It is certified that errors appear in the above-mentioned patent and that said Letters Patent is hereby corrected as shown below:

Column 8, line 5, Equation (0.16) – "x_{cam}" portion of equation needs to be part of the numerator.

Column 8, line 65, "$A\bar{x} = \vec{b}$" should read -- $A\vec{x} = \vec{b}$ --.

Column 9, line 2, "$\bar{x} = A^{-1}\vec{b}$" should read -- $\vec{x} = A^{-1}\vec{b}$ --.

Column 9, line 20, Equation (0.20), "$A^T A\bar{x} = A^T \bar{b}$" should read -- $A^T A\vec{x} = A^T \vec{b}$ --.

Column 9, line 22, Equation (0.20), "$\bar{x} = (A^T A)^{-1} A^T \bar{b}$" should read -- $\vec{x} = (A^T A)^{-1} A^T \vec{b}$ --.

Column 9, line 26, Equation (0.21), "$\bar{x} = A^T (AA^T)^{-1} \bar{b}$" should read -- $\vec{x} = A^T (AA^T)^{-1} \vec{b}$ --.

Column 9, line 37, "when translation" should read --when triangulation--.

Column 10, line 52, "correction vector $\bar{x}$" should read --correction vector $\vec{x}$ --.

Column 10, line 54, Equation (1.5), "$\bar{x} = A^T (AA^T + I/V)^{-1} \bar{b}$" should read -- $\vec{x} = A^T (AA^T + I/V)^{-1} \vec{b}$ --.

Column 11, line 20, Equation (2.0), numerator "$y_i - y_c{}^1$" should read -- $y_i - y_c{}^i$ --.

Mailing Address of Sender:
Patent Administrator
Katten Muchin Rosenman LLP
525 West Monroe Street
Chicago, Illinois 60661-3693
Facsimile: (312) 902-1061

Patent No: 6,919,880

DEC – 5 2005

UNITED STATES PATENT AND TRADEMARK OFFICE
CERTIFICATE OF CORRECTION

PATENT NO: 6,919,880

ISSUED: July 19, 2005

INVENTOR(S): Gerald Morrison and David Holmgren

It is certified that errors appear in the above-mentioned patent and that said Letters Patent is hereby corrected as shown below:

Column 14, line 62, "multiple triangular" should read --multiple triangulation--.

Column 14, lines 64-65, "device to determine offset angles of said imaging devices prior to" should read --device to determine offset angles of said imaging device prior to--.

Column 15, lines 25-26, "by determining offset angles of said imaging devices to compensate for fields of view of said imaging devices" should read --by determining offset angles of said imaging devices to compensate for fields of view of imaging devices--.

Mailing Address of Sender:
Patent Administrator
Katten Muchin Rosenman LLP
525 West Monroe Street
Chicago, Illinois 60661-3693
Facsimile: (312) 902-1061

Patent No: 6,919,880

DEC - 5 2005

UNITED STATES PATENT AND TRADEMARK OFFICE
CERTIFICATE OF CORRECTION

PATENT NO: 6,919,880

ISSUED: July 19, 2005

INVENTOR(S): Gerald Morrison and David Holmgren

It is certified that errors appear in the above-mentioned patent and that said Letters Patent is hereby corrected as shown below:

In the Drawings, Figure 2, "62a" should read –60a--.
In the Drawings, Figure 2, "62b" should read –60b--.

U.S. Patent Jul. 19, 2005 Sheet 2 of 3 US 6,919,880 B2

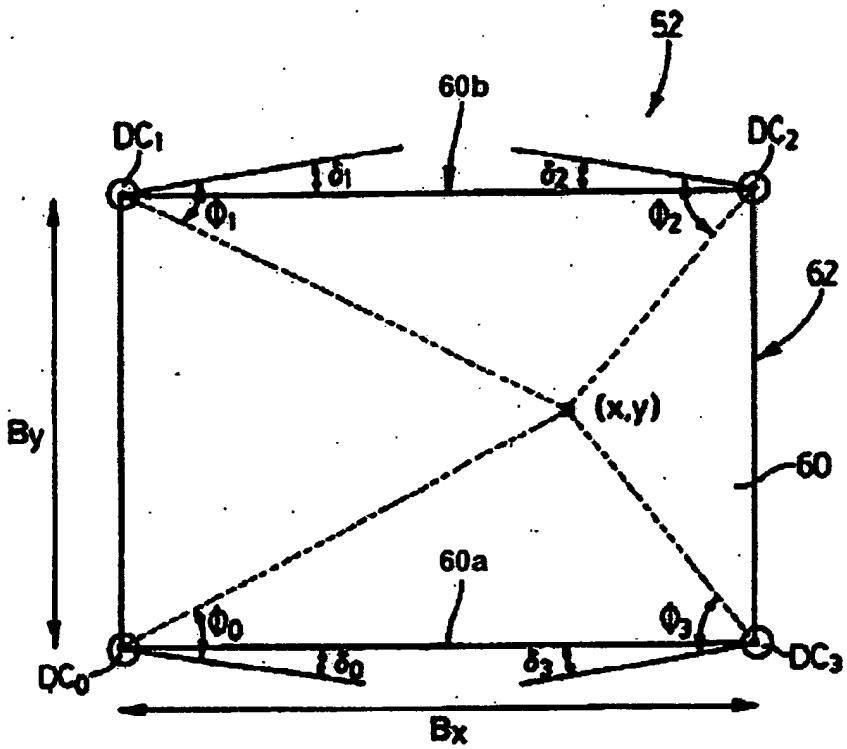

FIG. 2

Mailing Address of Sender:
Patent Administrator
Katten Muchin Rosenman LLP
525 West Monroe Street
Chicago, Illinois 60661-3693
Facsimile: (312) 902-1061

Patent No: 6,919,880

Doc #:WAS01 (214906-00007) 41588427v1;03/31/2005/Time:12:48
WAS01_41627109_1_204694_00070 11/28/2005 6:19 PM

DEC – 5 2005

UNITED STATES PATENT AND TRADEMARK OFFICE
CERTIFICATE OF CORRECTION

PATENT NO: 6,919,880

ISSUED: July 19, 2005

INVENTOR(S): Gerald Morrison and David Holmgren

It is certified that errors appear in the above-mentioned patent and that said Letters Patent is hereby corrected as shown below:

On the Cover Page, in the Representative Drawing, "62 a" should read --60a--.
On the Cover Page, in the Representative Drawing, "62 b" should read --60b--.

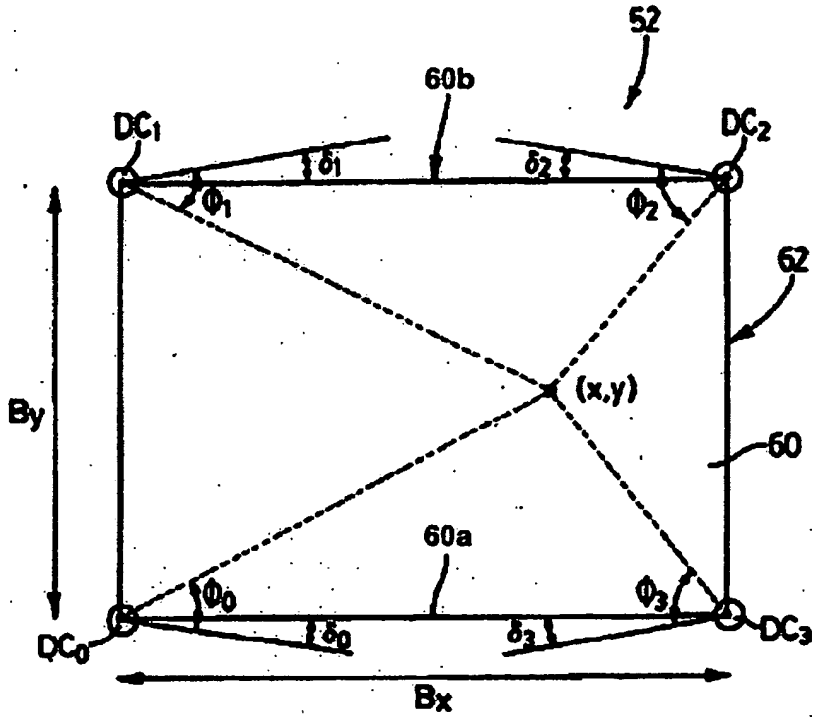

Mailing Address of Sender:
Patent Administrator
Katten Muchin Rosenman LLP
525 West Monroe Street
Chicago, Illinois 60661-3693
Facsimile: (312) 902-1061

Patent No: 6,919,880

Doc #:WAS01 (214906-00007) 41588427v1;03/31/2005/Time:12:48
WAS01_41627042_1_204694_00070 11/28/2005 5:51 PM

DEC 5 2005

UNITED STATES PATENT AND TRADEMARK OFFICE

Commissioner for Patents
United States Patent and Trademark Office
P.O. Box 1450
Alexandria, VA 22313-1450
www.uspto.gov

BAKER BOTTS LLP
PATENT DEPARTMENT
98 SAN JACINTO BLVD., SUITE 1500
AUSTIN, TX 78701-4039

COPY MAILED

MAR 30 2005

OFFICE OF PETITIONS

In re Application of :
Michael I. Catherwood :
Application No. 09/870,711 : DECISION GRANTING PETITION
Filed: June 1, 2001 : UNDER 37 CFR 1.313(c)(2)
Attorney Docket No. 18153.0049 :

This is a decision on the petition, filed March 23, 2005, under 37 CFR 1.313(c)(2) to withdraw the above-identified application from issue after payment of the issue fee.

The petition is **GRANTED**.

The above-identified application is withdrawn from issue for consideration of a submission under 37 CFR 1.114 (request for continued examination). See 37 CFR 1.313(c)(2).

Petitioner is advised that the issue fee paid on November 23, 2004 in the above-identified application cannot be refunded. If, however, the above-identified application is again allowed, petitioner may request that it be applied towards the issue fee required by the new Notice of Allowance.[1]

Telephone inquiries should be directed to the undersigned at (571) 272-3218.

This matter is being referred to Technology Center AU 2124 for processing of the request for continued examination under 37 CFR 1.114 and for consideration of the concurrently filed Information Disclosure Statement.

Frances Hicks

Frances Hicks
Petitions Examiner
Office of Petitions
Office of the Deputy Commissioner
for Patent Examination Policy

---

[1] *The request to apply the issue fee to the new Notice may be satisfied by completing and returning the new Issue Fee Transmittal Form PTOL-85(b), which includes the following language thereon: "Commissioner for Patents is requested to apply the Issue Fee and Publication Fee (if any) or re-apply any previously paid issue fee to the application identified above." Petitioner is advised that, whether a fee is indicated as being due or not, the Issue Fee Transmittal Form must be completed and timely submitted to avoid abandonment. Note the language in bold text on the first page of the Notice of Allowance and Fee(s) Due (PTOL-85).*

UNITED STATES PATENT AND TRADEMARK OFFICE

COMMISSIONER FOR PATENTS
UNITED STATES PATENT AND TRADEMARK OFFICE
WASHINGTON, D.C. 20231
www.uspto.gov

DIKE BRONSTEIN ROBERTS & CUSHMAN
INTELLECTUAL PROPERTY PRACTICE GROUP
EDWARDS & ANGELL
P.O. BOX 9169
BOSTON, MA 02209

COPY MAILED

MAY 1 4 2002

OFFICE OF PETITIONS

In re Application of	:	
Hiroshi Urabe	:	
Application No. 09/870,716	:	DECISION DISMISSING
Filed: May 30, 2001	:	PETITION
For: FLAME RETARDANT RESIN	:	
COMPOSITION	:	

This is a decision on the petition filed October 1, 2002, which is being treated under 37 CFR 1.10(d), requesting that the above-identified application be accorded a filing date of May 29, 2001, rather than the presently accorded filing date of May 30, 2001.

Applicant requests the earlier filing date on the basis that the application was purportedly deposited in Express Mail service on May 29, 2001, pursuant to the requirements of 37 CFR 1.10. Applicant acknowledges that the date of deposit in Express Mail shown on the applicant's Express Mail receipt is May 30, 2001, but argues that the application was actually deposited in Express Mail service on May 29, 2001.

Paragraph (a) and 37 CFR 1.10 states that:

> Any correspondence received by the Patent and Trademark Office (Office) that was delivered by the "Express Mail Post Office to Addressee" service of the United States Postal Service (USPS) will be considered filed in the Office on the date of deposit with the USPS. The date of deposit with the USPS is shown by the "date-in" on the Express Mail" mailing label or other official USPS notation. If the USPS deposit date cannot be determined, the correspondence will be accorded the Office receipt date as the filing date. See § 1.6(a). (Emphasis supplied).

Paragraph (d) of 37 CFR 1.10 states that:

> Any person filing correspondence under this section that was received by the Office and delivered by the "Express Mail Post Office and delivered by the "Express Mail Post Office to Addressee" service of the USPS, who can show that the "date-in" on the "Express Mail" mailing label or other

official notation entered by the USPS was incorrectly entered or omitted by the USPS, may petition the Commissioner to accord the correspondence a filing date as of the date the correspondence is shown to have been deposited with the USPS, provided that:

(1) The petition is filed promptly after the person becomes aware that the Office has accorded, or will accord, a filing date based upon an incorrect entry by the USPS;

(2) The number of the "Express Mail" mailing label was placed on the paper(s) or fee(s) that constitute the correspondence prior to the original mailing by "Express Mail;" and

(3) The petition includes a showing which establishes, to the satisfaction of the Commissioner, that the requested filing date was the date the correspondence was deposited in "Express Mail Post Office to Addresses" service prior to the last scheduled pickup for that day. Any showing pursuant to this paragraph must be corroborated by evidence from the USPS or that came into being after deposit and within one business day of the deposit of the correspondence in the "Express Mail Post Office to Addressee" service of the USPS."

A grantable petition under 37 CFR 1.10(d) must include "a showing which establishes, to the satisfaction of the Commissioner, that the requested filing date was the date the correspondence was deposited in 'Express Mail Post Office to Addressee' service prior to the last scheduled pick-up for that day." In addition, the showing must be corroborated by evidence from the USPS or that came into being after deposit and within one business day of the deposit of the correspondence in the 'Express Mail Post Office to Addressee' service of the USPS." Evidence from the USPS may be the Express Mail Corporate Account Mailing Statement. Evidence that came into being within one day after the deposit of the correspondence as Express Mail may be in the form of a log book which contains information such as the place, date and time of deposit; the time of the last scheduled pick-up for that date; and the date and time of entry in the log and of any other official notation by the USPS relied upon to show the date of deposit.

The statement of Robert Rosco indicates that on May 29, 2001 and May 30, 2001, he was the person responsible for taking mail from Edwards & Angell personnel and delivering the mail to the United States Postal Service (USPS). The statement also indicates that Robert Rosco has no recollection as to the date he mailed the instant application, but is certain that it was not mailed on May 30, 2001 because he did not deliver any express mail to the USPS on May 30, 2001. In addition, the declaration of David G. Conlin indicates that the application was deposited by Robert Rosco at the USPS Express Mail window at or around 6:34 p.m. on May 29, 2001.

The showing of record does not provide the necessary corroborating evidence required by the rule, *supra*. Further, the statement in the declaration of David G. Conlin which indicates that the application was deposited at the USPS Express Mail window on May 29, 2001 is contrary to the statement made by Robert Rosco indicating that he has no recollection as to the date he mailed the application. Lastly, no evidence has been provided to show that the application was deposited at the USPS Express mail window on May 29, 2001, prior to the last scheduled pick-up of the day.

The petition filed October 1, 2001 is not accompanied by the evidence required by the rule. Accordingly, the petition is dismissed.

The application is being returned to the Office of Initial Patent Examination with the presently accorded filing date of May 30, 2001.

Telephone inquiries concerning this matter may be directed to Karen Creasy at (703) 305-8859.

Brian Hearn
Senior Petitions Examiner
Office of Petitions
Office of the Deputy Commissioner
for Patent Examination Policy

UNITED STATES PATENT AND TRADEMARK OFFICE

Commissioner for Patents
United States Patent and Trademark Office
P.O. Box 1450
Alexandria, VA 22313-1450
www.uspto.gov

FINNEGAN, HENDERSON, FARABOW
GARRETT & DUNNER, LLP
901 NEW YORK AVENUE, NW
WASHINGTON, DC 20001-4413

COPY MAILED

SEP 14 2005

OFFICE OF PETITIONS

In re Application of	:	
Freida St. Germain. et. al.	:	
Application No. 09/870,784	:	ON PETITION
Filed: June 1, 2001	:	
Attorney Docket No. 07738.0142	:	

This is a decision on the petition under 37 CFR 1.137(b), filed February 10, 2005, to revive the above-identified application.

In response to the final Office action mailed May 19, 2004, petitioner hereby submits $1,500 for the petition to revive fee, an amendment, and the statement of unintentional delay.

Since petitioner has met the requirements to revive this application, pursuant to 37 CFR 1.137(b), the petition is **GRANTED**.

This application is being referred to Technology Center Art Unit 3727 for further processing.

Telephone inquiries concerning this decision should be directed to the undersigned at (571) 272-3226.

Andrea Smith
Petitions Examiner
Office of Petitions
Office of the Deputy Commissioner
for Patent Examination Policy

UNITED STATES PATENT AND TRADEMARK OFFICE

Commissioner for Patents
United States Patent and Trademark Office
P.O. Box 1450
Alexandria, VA 22313-1450
www.uspto.gov

Paper No. 11

Finnegan, Henderson, Farabow, Garrett & Dunner, L.L.P.
1300 I Street, N.W.
Washington, DC 20005

MAILED

OCT 1 4 2004

Technology Center 2100

In re Application of: Karl L. Ginter et al.	)	
Application No.: 09/870,801	)	
Filed: June 1, 2001	)	
For: SYSTEMS AND METHOD FOR SECURE TRANSACTION MANAGEMENT AND ELECTRONIC RIGHTS PROTECTION	)	**DECISION ON PETITION UNDER 37 C.F.R. § 1.181 TO WITHDRAW HOLDING OF ABANDONMENT**

This is a decision on the petition filed July 20, 2004 under 37 CFR § 1.181 to a withdraw the holding of abandonment of the above-identified application. The petition was supplemented by a filing on October 12, 2004 supplying some of the materials which did not accompany the original petition.

This application was held abandoned for failure to file a timely response to the Office action of mail date September 26, 2003. A Notice of Abandonment was mailed on May 20, 2004.

In support of the petition, Petitioner provides a copy of (1) an amendment (including 3 attachments designated Exhibits 1-3) filed in response to the Office action of mail date September 26, 2003, (2) a petition for a 3 month Extension of time, (3) a Notice of Litigation with 2 exhibits [including a CD-ROM] (4) an Information Disclosure Statement accompanied by a 38 page listing of the references on a PTO-1449, (5) a second Information Disclosure Statement with an authorization to charge $1310 to Deposit Account No. 06-0916, (6) CD-ROMs containing the references, (7) Notice of Interference with Exhibits A-G, and (8) a post card with a PTO stamp indicating receipt at the USPTO on March 26, 2004 of the aforementioned items.

M.P.E.P. § 503 states:

> A post card receipt which itemizes and properly identifies the items which are being filed serves as *prima facie* evidence of receipt in the USPTO of all the items listed thereon on the date stamped thereon by the USPTO.

Petitioner has established that a response was filed on March 26, 2004 with the authorization to charge the requisite fee for a three-month extension of time necessary for the response to be considered timely. Thus, Petitioner has established that a response was timely filed and the Abandonment was the result of Office error in not matching the response to the application file. Furthermore, a review of the file

indicates that the fees were posted to the application on March 31, 2004.

The petition is **GRANTED**. The Notice of Abandonment is **WITHDRAWN**.

The application file is being forwarded to the Technology Center support staff for processing of the amendment, the information disclosure statement and all the attachments. After processing, the application will then be forwarded to the Examiner for appropriate action.

Pinchus M. Laufer
Special Programs Examiner
Technology Center 2100
Computer Architecture, Software, and Information Security
(703) 306-4160

UNITED STATES PATENT AND TRADEMARK OFFICE

Commissioner for Patents
United States Patent and Trademark Office
P.O. Box 1450
Alexandria, VA 22313-1450
www.uspto.gov

Terry J. Anderson, Esq.
Northrop Grumman Corporation
1840 Century Park East
Los Angeles, CA 90067-2199

COPY MAILED

FEB 01 2005

OFFICE OF PETITIONS

In re Application of :
Steven Allen Schwartz :
Application No. 09/870,805 : DECISION ON PETITION
Filed: May 31, 2001 :
Attorney Docket No. NORTH-439A/A-2234 :

This is a decision on the petition under 37 CFR 1.137(b), filed January 18, 2005, to revive the above-identified application.

The petition is **GRANTED**.

This application became abandoned for failure to reply timely to the nonfinal Office action mailed May 26, 2004, which set a three-month shortened statutory period to respond. No extensions of time were obtained pursuant to 37 CFR 1.136(a). Accordingly, this application became abandoned on August 27, 2004. The petition precedes the mailing of the Notice of Abandonment.

Petitioner has met the requirements to revive the above-identified application pursuant to 37 CFR 1.137(b). Petitioner submitted the required reply in the form of an amendment, paid the petition fee, and made the proper statement of unintentional delay.

This matter is being referred to Technology Center Art Unit 2623.

Telephone inquiries concerning this matter may be directed to the undersigned at (571) 272-3211.

Christina Tartera Donnell

Christina Tartera Donnell
Senior Petitions Attorney
Office of Petitions

UNITED STATES PATENT AND TRADEMARK OFFICE

Commissioner for Patents
United States Patent and Trademark Office
P.O. Box 1450
Alexandria, VA 22313-1450
www.uspto.gov

FINNEGAN HENDERSON FARABOW
GARRETT & DUNNER LLP
901 NEW YORK AVENUE NW
WASHINGTON, DC 20001-4413

COPY MAILED

DEC 0 2 2005

OFFICE OF PETITIONS

In re Application of	:	
Dennis W. Wahr et al	:	
Application No. 09/870,813	:	DECISION GRANTING PETITION
Filed: June 1, 2001	:	UNDER 37 CFR 1.313(c)(2)
Attorney Docket No. 08386.0004	:	

This is a decision on the petition, filed December 1, 2005, under 37 CFR 1.313(c)(2) to withdraw the above-identified application from issue after payment of the issue fee.

The petition is **GRANTED**.

The above-identified application is withdrawn from issue for consideration of a submission under 37 CFR 1.114 (request for continued examination). See 37 CFR 1.313(c)(2).

Petitioner is advised that the issue fee paid on July 19, 2005 in the above-identified application cannot be refunded. If, however, the above-identified application is again allowed, petitioner may request that it be applied towards the issue fee required by the new Notice of Allowance.[1]

There is no indication that petitioner herein, Mr. Edward M. Arons, was ever given a power of attorney to prosecute this application. However, in accordance with 37 CFR 1.34, the signature of Mr. Arons appearing on the correspondence shall constitute a representation to the United States Patent and Trademark Office that he is authorized to represent the

---

[1] *The request to apply the issue fee to the new Notice may be satisfied by completing and returning the new Issue Fee Transmittal Form PTOL-85(b) (along with any balance due at the time of payment), which includes the following language thereon: "Commissioner for Patents is requested to apply the Issue Fee and Publication Fee (if any) or re-apply any previously paid issue fee to the application identified above." Petitioner is advised that, whether a fee is indicated as being due or not, the Issue Fee Transmittal Form* ***must*** *be completed and timely submitted to avoid abandonment. Note the language in bold text on the first page of the Notice of Allowance and Fee(s) Due (PTOL-85).*

particular party in whose behalf he acts. If Mr. Arons desires to receive correspondence regarding this file, the appropriate power of attorney documentation must be submitted. A courtesy copy of this decision is being mailed to Mr. Arons. However, until otherwise instructed, all future correspondence regarding this application file will be directed solely to the above-noted correspondence address of record.

Telephone inquiries should be directed to the undersigned at (571) 272-3218.

This matter is being referred to Technology Center AU 3731 for processing of the request for continued examination under 37 CFR 1.114 and for consideration of the Information Disclosure Statement.

Frances Hicks

Frances Hicks
Petitions Examiner
Office of Petitions

cc:

Edward M. Arons
Fish & Neave IP Group
Ropes & Gray LLP
1251 Avenue of the Americas
New York, NY 10020-1105

UNITED STATES PATENT AND TRADEMARK OFFICE

Commissioner for Patents
United States Patent and Trademark Office
P.O. Box 1450
Alexandria, VA 22313-1450
www.uspto.gov

FISH & NEAVE IP GROUP
ROPES & GRAY LLP
1251 AVENUE OF THE AMERICAS FL C3
NEW YORK, NY 10020-1105

COPY MAILED
DEC 19 2006
OFFICE OF PETITIONS

In re Application of	:
Dennis W. Wahr et al	:
Application No. 09/870,813	: DECISION GRANTING PETITION
Filed: June 1, 2001	: UNDER 37 CFR 1.313(c)(2)
Attorney Docket No. 293/088	:

This is a decision on the petition, filed December 18, 2006, under 37 CFR 1.313(c)(2) to withdraw the above-identified application from issue after payment of the issue fee.

The petition is **GRANTED**.

The above-identified application is withdrawn from issue for consideration of a submission under 37 CFR 1.114 (request for continued examination). See 37 CFR 1.313(c)(2).

Petitioner is advised that the issue fee paid on March 30, 2006 in the above-identified application cannot be refunded. If, however, the above-identified application is again allowed, petitioner may request that it be applied towards the issue fee required by the new Notice of Allowance.[1]

Telephone inquiries should be directed to the undersigned at (571) 272-3218.

This matter is being referred to Technology Center AU 3734 for processing of the request for continued examination under 37 CFR 1.114 and for consideration of the Information Disclosure Statement.

Frances Hicks
Petitions Examiner
Office of Petitions

C:\Documents and Settings\FHicks\My Documents\470\Dec10\870813.wpd

---

[1] *The request to apply the issue fee to the new Notice may be satisfied by completing and returning the new Part B – Fee(s) Transmittal Form (along with any balance due at the time of submission). Petitioner is advised that the Issue Fee Transmittal Form must be completed and timely submitted to avoid abandonment.*

UNITED STATES PATENT AND TRADEMARK OFFICE

Commissioner for Patents
United States Patent and Trademark Office
P.O. Box 1450
Alexandria, VA 22313-1450
www.uspto.gov

FINNEGAN HENDERSON FARABOW
GARRETT & DUNNER LLP
901 NEW YORK AVENUE NW
WASHINGTON DC 20001-4413

COPY MAILED

APR 13 2005

OFFICE OF PETITIONS

In re Application of
Hisashi Semba et al
Application No. 09/870,821
Filed: June 1, 2001
Attorney Docket No. 04853.0073

DECISION GRANTING PETITION
UNDER 37 CFR 1.313(c)(2)

This is a decision on the petition, filed April 12, 2005, under 37 CFR 1.313(c)(2) to withdraw the above-identified application from issue after payment of the issue fee.

The petition is **GRANTED**.

The above-identified application is withdrawn from issue for consideration of a submission under 37 CFR 1.114 (request for continued examination). See 37 CFR 1.313(c)(2).

Petitioner is advised that the issue fee paid on November 15, 2004 in the above-identified application cannot be refunded. If, however, the above-identified application is again allowed, petitioner may request that it be applied towards the issue fee required by the new Notice of Allowance.[1]

Telephone inquiries should be directed to the undersigned at (571) 272-3218.

This matter is being referred to Technology Center AU 1651 for processing of the request for continued examination under 37 CFR 1.114 and for consideration of the concurrently filed Information Disclosure Statement.

Frances Hicks
Petitions Examiner
Office of Petitions
Office of the Deputy Commissioner
for Patent Examination Policy

---

[1] *The request to apply the issue fee to the new Notice may be satisfied by completing and returning the new Issue Fee Transmittal Form PTOL-85(b), which includes the following language thereon: "Commissioner for Patents is requested to apply the Issue Fee and Publication Fee (if any) or re-apply any previously paid issue fee to the application identified above." Petitioner is advised that, whether a fee is indicated as being due or not, the Issue Fee Transmittal Form* ***must*** *be completed and timely submitted to avoid abandonment. Note the language in bold text on the first page of the Notice of Allowance and Fee(s) Due (PTOL-85).*

UNITED STATES PATENT AND TRADEMARK OFFICE

COMMISSIONER FOR PATENTS
UNITED STATES PATENT AND TRADEMARK OFFICE
P.O. BOX 1450
ALEXANDRIA, VA 22313-1450
www.uspto.gov

FINNEGAN, HENDERSON, FARABOW,
GARRETT & DUNNER LLP
901 NEW YORK AVENUE, NW
WASHINGTON, DC 20001-4413

COPY MAILED

APR 1 1 2005

OFFICE OF PETITIONS

In re Application of	:	
Semba et al.	:	DECISION ON APPLICATION
Application No. 10/870,821	:	for
Filed: June 1, 2001	:	PATENT TERM ADJUSTMENT
Attorney Docket No. 04853.0073	:	

This is a decision on the "APPLICATION FOR PATENT TERM ADJUSTMENT-PRE-GRANT," filed November 12, 2004. Applicants request that the initial determination of patent term adjustment under 35 U.S.C. 154(b) be corrected from five (5) days to ninety-three (93) days.

The application for patent term adjustment is **DISMISSED**.

On August 30, 2004, the Office mailed the Determination of Patent Term Adjustment under 35 U.S.C. 154(b) in the above-identified application. The Notice stated that the patent term adjustment (PTA) to date is 5 days. On November 12, 2004, applicants timely submitted the instant application for patent term adjustment[1]. Applicants contend that the reduction of 88 days associated with their filing of an Information Disclosure Statement (IDS) on December 2, 2003 is incorrect. Applicants assert that the IDS included a § 1.704(d) statement.

[1] PALM records show that the Issue Fee was received on November 15, 2004.

Copied from 10870821 on 11/22/2005

Applicants state that the above-identified application is not subject to a terminal disclaimer.

Pursuant to 37 CFR § 1.704(c)(8), the submission of a supplemental reply or other paper, other than a supplemental reply or other paper expressly requested by the examiner, after a reply has been filed, is a failure to engage in reasonable efforts to conclude prosecution. It is undisputed that after filing a response on September 5, 2003, on December 2, 2003, applicants filed an IDS. The record does not support a conclusion that the IDS was expressly requested by the examiner.

37 CFR § 1.704(d) provides that:

> A paper containing only an information disclosure statement in compliance with §§ 1.97 and 1.98 will not be considered a failure to engage in reasonable efforts to conclude prosecution (processing or examination) of the application under paragraphs (c)(6), (c)(8), (c)(9), or (c)(10) of this section if it is accompanied by a statement that each item of information contained in the information disclosure statement was first cited in any communication from a foreign patent office in a counterpart application and that this communication was not received by any individual designated in § 1.56(c) more than thirty days prior to the filing of the information disclosure statement. This thirty-day period is not extendable.

A review of the IDS filed December 2, 2003, reveals that it did not include a § 1.704(d) statement[1]. Specifically, the IDS was accompanied by a statement that:

---

[1] Applicants are reminded that § 1.704(d) was revised, effective May 24, 2004, as follows:

> A paper containing only an information disclosure statement in compliance with §§ 1.97 and 1.98 will not be considered a failure to engage in reasonable efforts to conclude prosecution (processing or examination) of the application under paragraphs (c)(6), (c)(8), (c)(9), or (c)(10) of this section if it is accompanied by a statement that each item of information contained in the information disclosure statement was first cited in any communication from a foreign patent office in a counterpart application and that this communication was not received by any individual designated in § 1.56(c) more than thirty days prior to the filing of the information disclosure statement. This thirty-day period is not extendable.

Copied from 10870821 on 11/22/2005

> this Information Disclosure Statement was first cited in a communication from the European Patent Office in a counterpart foreign application, and this Information Disclosure Statement is being filed within three months of the mailing date of that communication
>
> (emphasis added).

Applicants are incorrect in their assertion that the IDS complied with § 1.704(d) by including a statement that "the communication was not received by any individual designated in 1.56(c) more than thirty days prior to the filing of the IDS." The IDS of record does not include such a statement.

Moreover, applicants state that the IDS filed on December 2, 2003, was filed within 30 days of the European Search Report dated November 6, 2003, a copy of which was included with the IDS. However, presenting of such papers is not tantamount to making a statement that the communication was not received by any individual designated in § 1.56(c) more than thirty days prior to the filing of the information disclosure statement. Nor has a proper party made such a statement on request for reconsideration of patent term adjustment.

Accordingly, it is concluded that a period of reduction of 88 days pursuant to § 1.704(c)(8) was properly entered for the filing of the IDS on December 2, 2003.

In view thereof, the determination of patent term adjustment at the time of the mailing of the notice of allowance is 5 days.

The $200.00 fee set forth in 37 CFR 1.18(e) has been charged to Deposit Account No. 06-0916, as authorized. No additional fees are required.

The application is being forwarded to the Office of Patent Publication for issuance of the patent.

This revision requires that the statement include the language "each item of information contained in the information disclosure statement was first cited ..." for the exception to apply. See 69 FR 21704, Apr. 22, 2004.

Copied from 10870821 on 11/22/2005

Telephone inquiries specific to this matter should be directed to Nancy Johnson, Senior Petitions Attorney, at (571) 272-3219.

Karin Ferriter
Senior Legal Advisor
Office of Patent Legal Administration
Office of Deputy Commissioner
for Patent Examination Policy

Copied from 10870821 on 11/22/2005

UNITED STATES PATENT AND TRADEMARK OFFICE

COMMISSIONER FOR PATENTS
UNITED STATES PATENT AND TRADEMARK OFFICE
P.O. BOX 1450
ALEXANDRIA, VA 22313-1450
www.uspto.gov

FINNEGAN, HENDERSON, FARABOW,
GARRETT & DUNNER LLP
901 NEW YORK AVENUE, NW
WASHINGTON, DC 20001-4413

COPY MAILED

MAR 17 2006

OFFICE OF PETITIONS

In re Application of	:	
Semba et al.	:	DECISION ON REQUEST FOR
Application No. 09/870,821	:	RECONSIDERATION OF
Filed: June 1, 2001	:	DISMISSAL OF APPLICATION FOR
Attorney Docket No. 04853.0073	:	PATENT TERM ADJUSTMENT-PRE-GRANT
	:	FURTHER APPLICATION FOR
	:	PATENT TERM ADJUSTMENT-PRE-GRANT
	:	

This is a decision on the "REQUEST FOR RECONSIDERATION OF DISMISSAL OF APPLICATION FOR PATENT TERM ADJUSTMENT-PRE-GRANT AND FURTHER APPLICATION FOR PATENT TERM ADJUSTMENT-PRE-GRANT," filed September 8, 2005. In part, applicants request reconsideration of the decision dismissing application for patent term adjustment mailed April 11, 2005. Given the request for reconsideration of dismissal, and in light of a second application for patent term adjustment based on the determination of patent term adjustment under 35 U.S.C. 154(b) shown in the second notice of allowance mailed June 8, 2005, applicants request that the initial determination of patent term adjustment be corrected from zero (0) days to ninety-three (93) days.

To the extent that the instant application for patent term adjustment requests reconsideration of the decision dismissing application for patent term adjustment mailed April 11, 2005, the application is **DISMISSED AS UNTIMELY FILED**.

37 CFR 1.181(f) provides that, inter alia, except as otherwise provided, any petition not filed within 2 months from the action

complained of may be dismissed as untimely. The 2-month period for filing timely petitions set forth in 37 CFR 1.181(f) applies to any petition under 37 CFR part 1, except as otherwise provided. A number of sections (e.g., 37 CFR 1.377, 37 CFR 1.378, 37 CFR 1.644, and 37 CFR 1.740) specify the time period within which a petition must be filed (or may be dismissed as untimely). The 2-month time period in 37 CFR 1.181(f) applies to a petition under any section (e.g., 37 CFR 1.182 and 37 CFR 1.183) that does not specify the time period within which a petition must be filed. The 2-month period is not extendible under 37 CFR 1.136(a) since the time is within the discretion of the Director of the USPTO. See MPEP 1002.

There is no provision in the rules for requesting before the Office reconsideration of decisions on application for patent term adjustment under § 1.705(b). Accordingly, 37 CFR 1.181(f) applies, and the period for requesting reconsideration of a decision on application for patent term adjustment is a non-extendable two month time limit. Thus, it is appropriate to dismiss the instant request for reconsideration filed on September 8, 2005, almost 5 months after the decision mailed April 11, 2005, as untimely filed.

As to the second application for patent term adjustment, the application is **GRANTED to the extent indicated herein**.

On June 8, 2005, the Office mailed the Determination of Patent Term Adjustment under 35 U.S.C. 154(b) in the above-identified application. The Notice stated that the patent term adjustment (PTA) to date is 0 days. On September 8, 2005, applicants timely submitted the instant application for patent term adjustment[1]. Applicants contend that a reduction of 133 days associated with their filing of an Information Disclosure Statement (IDS), a Petition for Withdrawal from Issue and a Request for Continued Examination (RCE) on April 12, 2005 is incorrect. Applicants acknowledge that the filing of the IDS did not occur within the 30 days of receipt under § 1.704(d). Nonetheless, applicants contend that no reduction is warranted because this submission is not within the proscribed "circumstances that constitute a failure of applicant to engage in reasonable efforts to conclude prosecution" under 1.704(c).

---

[1] PALM records show that in response to the 2nd Notice of Allowance, the Issue Fee was received on September 8, 2005.

Yet, in the alternatively, applicants assert that if treated as a reduction pursuant to 1.704(c)(10), the reduction of 133 days is incorrect. Applicants acknowledge that the reduction should then be 57 days, counting the number of days beginning on April 12, 2005, to and ending on June 8, 2005, the date of mailing of the second Notice of Allowance.

Applicants state that the above-identified application is not subject to a terminal disclaimer.

Applicants arguments have been considered. Applicants are advised that 37 CFR 1.704(c)(1) through 1.704(c)(11) address situations that occur with sufficient frequency to warrant being specifically provided for in the rules of practice. These situations do not represent an exhaustive listing of actions or inactions that interfere with the Office's ability to process or examine an application, since there are a myriad of actions or inactions that occur infrequently but will interfere with the Office's ability to process or examine an application (e.g., applicant files and persists in requesting reconsideration of a meritless petition under 37 CFR 1.10; parties to an interference obtain an extension for purposes of settlement negotiations which do not result in settlement of the interference; and when the scope of the broadest claim in the application at the time an application is placed in condition for allowance is substantially the same as suggested or allowed by the examiner more than six months earlier than the date the application was placed in condition for allowance). Thus, the actions or inactions set forth in 37 CFR 1.704(c) are exemplary circumstances that constitute a failure of an applicant to engage in reasonable efforts to conclude processing or examination of an application. The Office may also reduce a period of adjustment provided in 37 CFR 1.703 on the basis of conduct that interferes with the Office's ability to process or examine an application under the authority provided in 35 U.S.C. (b)(2)(C)(iii), even if such conduct is not specifically addressed in 37 CFR 1.704(c).

In this instance, it appears that the reduction of 133 days was entered pursuant to § 1.704(b). This is incorrect. Nonetheless, a reduction pursuant to § 1.704(c)(10) of 58 days (not 57 days) is proper. As acknowledged by applicants, the relevant papers were filed after the mailing of a notice of allowance, did not include a 1.704(d) statement, and were responded to with the mailing of a second Notice of Allowance. By definition, this is a failure to engage in reasonable efforts to conclude prosecution within the

meaning of 1.704(c)(10). Fifty-eight (not 57) days is the number of days in the period, counting the number of days beginning on April 12, 2005 and ending on June 8, 2005.

In view thereof, the determination of patent term adjustment at the time of the mailing of the notice of allowance mailed June 8, 2005 is zero (0) days (including two hundred fifty-nine (259) days of applicant delay).

The $200.00 fee set forth in 37 CFR 1.18(e) has been charged to Deposit Account No. 06-0916, as authorized. No additional fees are required.

The application is being forwarded to the Office of Patent Publication for issuance of the patent. The patent term adjustment indicated on the patent (as shown on the Issue Notification mailed about three weeks prior to patent issuance) will include any additional adjustment accrued both for Office delay in issuing the patent more than four months after payment of the issue fee and satisfaction of all outstanding requirements, and for the Office taking in excess of three years to issue the patent (to the extent that the three-year period does not overlap with periods already accorded).

Telephone inquiries specific to this matter should be directed to the undersigned at (571) 272-3219.

Nancy Johnson
Senior Petitions Attorney
Office of Petitions

UNITED STATES PATENT AND TRADEMARK OFFICE

Commissioner for Patents
United States Patent and Trademark Office
P.O. Box 1450
Alexandria, VA 22313-1450
www.uspto.gov

MORGAN LEWIS & BOCKIUS LLP
1111 PENNSYLVANIA AVENUE NW
WASHINGTON DC 20004

COPY MAILED

JAN 15 2008

OFFICE OF PETITIONS

In re Application of	:	
Henri Waelbroeck et al	:	
Application No. 09/870,845	:	DECISION GRANTING PETITION
Filed: May 31, 2001	:	UNDER 37 CFR 1.137(b)
Attorney Docket No. 061165-0008	:	

This is a decision on the petition under 37 CFR 1.137(b), filed June 25, 2007, to revive the above-identified application.

The petition is **GRANTED**.

The petition satisfies the conditions for revival pursuant to the provisions of 37 CFR 1.137(b) in that (1) the reply in the form of an amendment; (2) the petition fee; and (3) the required statement of unintentional delay have been received. Accordingly, the reply to the Nonfinal Rejection of November 16, 2006, is accepted as having been unintentionally delayed.

Telephone inquiries concerning this decision should be directed to the undersigned at (571) 272-3208.

This matter is being referred to Technology Center AU 3693.

Karen Creasy

Karen Creasy
Petitions Examiner
Office of Petitions

UNITED STATES PATENT AND TRADEMARK OFFICE

Commissioner for Patents
United States Patent and Trademark Office
P.O. Box 1450
Alexandria, VA 22313-1450
www.uspto.gov

Paper No. 12

TODD N. HATHAWAY
119 N. COMMERCIAL
SUITE 620
BELLINGHAM, WA 98225

COPY MAILED

JUN 1 0 2004

OFFICE OF PETITIONS

In re Application of	:	
Andersen et al.	:	
Application No. 09/870,858	:	ON PETITION
Filed: May 30, 2001	:	
Attorney Docket No. P1065	:	

This decision concerns the April 5, 2004 petition under 37 CFR 1.137(b).

The petition is **GRANTED.**

The application became abandoned on March 31, 2003 for failure to timely respond to the December 30, 2002 non-final Office Action.

The instant petition encloses an amendment and the $665 petition fee (small entity), and states in essence that the entire delay in responding to the December 30, 2002 non-final Office Action from the due date until the filing of a grantable §1.137(b) petition was unintentional. The petition is thus granted.

The application file is being returned to Technology Center 3600 for further examination.

Telephone inquiries should be directed to the undersigned at (703) 308-0763.

RC Tang
Petitions Attorney
Office of Petitions

UNITED STATES PATENT AND TRADEMARK OFFICE

Commissioner for Patents
United States Patent and Trademark Office
P.O. Box 1450
Alexandria, VA 22313-1450
www.uspto.gov

Paper No.

Todd N. Hathaway
119 N. Commercial St., #620
Bellingham WA 98225-4437

COPY MAILED

JUN 20 2007

OFFICE OF PETITIONS

In re Application of	:	
Andersen et al.	:	DECISION ON
Application No. 09/870,858	:	PETITION
Filed: May 30, 2001	:	
Attorney Docket No. P1065	:	

This is a decision on the "PETITION TO WITHDRAW HOLDING OF ABANDONMENT UNDER 37 CFR §1.181(a)," filed March 26, 2007.

The above-identified application became abandoned for failure to timely file a proper reply to the final Office action mailed August 15, 2006. The Office action set a three (3) month shortened statutory period for reply, with extensions of time obtainable under 37 CFR 1.136(a). No reply having been received and no extension obtained, the application became abandoned effective November 16, 2006. A courtesy Notice of Abandonment was mailed on March 19, 2007.

In response, applicants timely filed the instant petition. Petitioner states that applicants timely filed an Amendment and Response to the Office action on October 16, 2006. The petition included a copy of the amendment as filed. In support thereof, applicants provided a copy of their itemized return postcard and a copy of the Express Mail mailing label used to transmittal the response.

A review of the petition reveals that the application number was misidentified on the transmittal. A review of the record of the misidentified application confirms that the response as petitioner maintains it was filed on October 16, 2006 was, in fact, filed with the wrong application number. Further investigation reveals that the response with a date of receipt of October 16, 2006, and a certificate of mailing pursuant to 37 CFR § 1.8 dated October 16, 2006, was entered in the

misidentified application. This has been corrected. The response filed October 16, 2006, has been "moved" from the electronic record of the incorrectly identified application to the record of the instant application. Moreover, given the itemized and date-stamped postcard, the response is considered timely filing.

Petitioner is reminded that to obtain the benefit of the date of deposit in Express Mail on petition the correspondence as originally filed must bear the Express Mail mailing label number. In this instance, it does not appear that the label number was placed on the correspondence. Fortunately, the Office was able to rely on actual receipt of the correspondence, as well as, a properly itemized and date-stamped return postcard.

In view thereof, the notice of abandonment mailed March 19, 2007 is hereby **VACATED**, and the holding of abandonment is hereby **WITHDRAWN**.

The petition under § 1.181 is **GRANTED**.

No fee is required on petition under § 1.181.

Technology Center AU 3677 has been advised of this decision. The application file is, thereby, forwarded to the Technology Center's technical staff to withdraw the holding of abandonment and for the examiner to consider the response timely filed via deposit in Express Mail service on October 16, 2006 (and resubmitted on petition filed March 26, 2007).

Telephone inquiries concerning this decision should be directed to the undersigned at (571) 272-3219.

Nancy Johnson
Senior Petitions Attorney
Office of Petitions

UNITED STATES PATENT AND TRADEMARK OFFICE

Commissioner for Patents
United States Patent and Trademark Office
P.O. Box 1450
Alexandria, VA 22313-1450
www.uspto.gov

Paper No. 15

KEVIN REIF
C/O BLAKELY SOKOLOFF TAYLOR & ZAFMAN
12400 WILSHIRE BOULEVARD, SEVENTH FLOOR
LOS ANGELES, CA 90025

COPY MAILED

JUL 0 9 2004

OFFICE OF PETITIONS

In re Application of	:	
Richard J. Qian	:	
Application No. 09/870,867	:	ON PETITION
Filed: May 30, 2001	:	
Attorney Docket No. 42390.P11155	:	

This is a decision on the petition under 37 CFR 1.137(b), filed June 21, 2004, to revive the above-identified application.

The petition is **GRANTED**.

The above-identified application became abandoned for failure to reply within the meaning of 37 CFR 1.113 in a timely manner to the final Office action mailed July 28, 2003, which set a shortened statutory period for reply of three (3) months. No extensions of time under the provisions of 37 CFR 1.136(a) were obtained. Accordingly, the above-identified application became abandoned on October 29, 2003.

Telephone inquiries concerning this decision should be directed to Wan Laymon at (703) 305-9282.

The file is forwarded to Technology Center AU 2175 for processing of the request for continued examination (RCE) under 37 CFR 1.114 and for consideration of the concurrently filed Amendment.

Wan Laymon
Wan Laymon
Petitions Examiner
Office of Petitions
Office of the Deputy Commissioner
for Patent Examination Policy

UNITED STATES PATENT and TRADEMARK OFFICE
UNDER SECRETARY OF COMMERCE FOR INTELLECTUAL PROPERTY AND
DIRECTOR OF THE UNITED STATES PATENT AND TRADEMARK OFFICE
WASHINGTON, D.C. 20231
WWW.USPTO.GOV

NOV 27 2001

A5

In re Application of John Stephen Cart Serial No.: 09/870,871 Filed: May 31, 2001 For : COMPOSITION OF DRILLING FLUIDS COMPRISING GROUND ELASTOMERIC CRUMB RUBBER MATERIAL AND A METHOD OF DECREASING SEEPAGE AND WHOLE MUD LOSS USING SUCH COMPOSITION	DECISION ON PETITION TO MAKE SPECIAL UNDER 37 C.F.R. 1.102 – V & VI – ENERGY

This is a decision on the petition filed on July 19, 2001, requesting that the above identified application be granted Special Status under Sections 37 C.F.R. 1.102 and M.P.E.P 708.02 VI.

The petition has been considered and found to comply with the requirements set forth under the above noted sections. Accordingly, the petition is granted.

The petition is GRANTED.

Richard V. Fisher

Richard V. Fisher, Director
Technology Center 1700
Chemical and Materials Engineering

KEAN, MILLER, HAWTHORNE, D'ARMOND
MCCOWAN & JARMAN, L.L.P.
Post Office Box 3513
Baton Rouge, LA 70821

UNITED STATES PATENT AND TRADEMARK OFFICE

COMMISSIONER FOR PATENTS
UNITED STATES PATENT AND TRADEMARK OFFICE
P.O. BOX 1450
ALEXANDRIA, VA 22313-1450
www.uspto.gov

Beyer Weaver & Thomas LLP
P. O. Box 778
Berkeley, CA 94704-0778

COPY MAILED

NOV 0 1 2004

OFFICE OF PETITIONS

In re Application of	:	
Douglas C. Watson, et al.	:	
Application No. 09/870,881	:	ON PETITION
Filed: May 30, 2001	:	
Attorney Docket No. NIKOP002/PA0 327	:	

This is a decision on the petition under 37 CFR 1.137(b), filed August 24, 2004, to revive the above-identified application.

The petition is **GRANTED**.

Telephone inquiries concerning this decision should be directed to the undersigned at (571) 272-3223.

The application file is being referred to Technology Center 2800 for processing the Request for Continued Examination under 37 CFR 1.114 filed with the instant petition.

Marianne E. Jenkins
Petitions Examiner
Office of Petitions
Office of the Deputy Commissioner
for Patent Examination Policy

UNITED STATES PATENT AND TRADEMARK OFFICE

COMMISSIONER FOR PATENTS
UNITED STATES PATENT AND TRADEMARK OFFICE
P.O. BOX 1450
ALEXANDRIA, VA 22313-1450
www.uspto.gov

Paper No. 8

WILLIAMS, MORGAN & AMERSON, P.C.
10333 RICHMOND, SUITE 1100
HOUSTON TX 77042

COPY MAILED

DEC 23 2003

OFFICE OF PETITIONS

In re Application of Weber et al. Application No. 09/870,889 Filed: May 30, 2001 Attorney Docket No. 2000.038800/TT3761	DECISION GRANTING PETITION UNDER 37 CFR 1.137(b)

This is a decision on the petition, filed November 6, 2003, which is being treated as a petition under 37 CFR 1.137(b) to revive the instant nonprovisional application for failure to timely notify the U.S. Patent and Trademark (USPTO) of the filing of an application in a foreign country, or under a multinational treaty that requires publication of applications eighteen months after filing. *See* 37 CFR 1.137(f).

The petition is **GRANTED**.

Petitioner states that the present nonprovisional application is the subject of an application filed in an eighteen month publication country on April 17, 2002. However, the USPTO was unintentionally not notified of this filing within 45 days subsequent to the filing of the subject application in an eighteen month publication country.

In view of the above, this application became abandoned pursuant to 35 U.S.C. § 122(b)(2)(B)(iii) and 37 CFR 1.213(c) for failure to timely notify the Office of the filing of an application in a foreign country or under a multilateral international agreement that requires publication of applications 18 months after filing.

A petition to revive an application abandoned pursuant to 35 U.S.C. 122(b)(2)(B)(iii) for failure to notify the USPTO of a foreign filing must be accompanied by:

(1) the required reply which is met by the notification of such filing in a foreign country or under a multinational treaty;

(2) the petition fee as set forth in 37 CFR 1.17(m); and,

(3) a statement that the entire delay in filing the required reply from the due date of the reply until the filing of a grantable petition was unintentional.

The present petition has been found to be in compliance with 37 CFR 1.137(b). Accordingly, the failure to timely notify the

USPTO of a foreign or international filing within 45 days after the date of filing of such foreign or international application as provided by 35 U.S.C. § 122(b)(2)(B)(iii) and 37 CFR 1.213(c) is accepted as having been unintentionally delayed.

The previous Request and Certification under 35 U.S.C. § 122(b)(2)(B)(i) has been rescinded. Office records indicate that the application published on February 27, 2003.

This application is being forwarded to Technology Center Art Unit 2136.

Any inquiries concerning this decision may be directed to the undersigned at (703) 306-5589.

Christina Tartera Donnell

Christina Tartera Donnell
Senior Petitions Attorney
Office of Petitions

- UNITED STATES PATENT AND TRADEMARK OFFICE

JUN 13 2005

Commissioner for Patents
United States Patent and Trademark Office
P.O. Box 1450
Alexandria, VA 22313-145

WORKMAN NYDEGGER
(F/K/A WORKMAN NYDEGGER & SEELEY)
60 East South Temple
1000 Eagle Gate Tower
Salt Lake City, UT 84111

In re application of		
Shawn M. Wheeland	:	
Application No. 09/870,892	:	**DECISION ON REQUEST**
Filed: May 31, 2001	:	**FOR WITHDRAWAL OF**
For: SECURING PROSPECTIVE REPRESENTATIVES FOR A HOME BASED BUSINESS	:	**ATTORNEY**

This is a decision on the request filed on April 21, 2005, under 37 CFR 1.36 and MPEP 402.06, requesting permission to withdraw as the attorney of record in the above-identified application.

The request is **NOT APPROVED as Moot**.

Under 37 CFR 1.36 an attorney may withdraw only upon application to and approval by the Commissioner. It should be noted that a withdrawal is effective when approved, not when filed. Besides giving due notice to his or her client and delivering to the client all papers and property to which the client is entitled as specified under 37 CFR 10.40, approval of such a request requires that the following conditions be met:

A) Each attorney of record must sign the notice of withdrawal, or the notice must contain a clear indication of one attorney signing on behalf of another, because the Office does not recognize law firms;

B) A proper reason for the withdrawal as enumerated in 37 CFR 10.40(b) or subsection (1)-(6) of 37 CFR 10.40(c) must be provided; and

C) If withdrawal is requested in accordance with 37 CFR 10.40(c) above, there must be at least 30 days between approval of the withdrawal and the later of the expiration date of a time period for reply or the expiration date of the period which can be obtained by a petition and fee for extension of time under 37 CFR 1.136(a).

The request to withdraw as attorney in the above-identified application is not approved as moot because the attorney making the request; Jonathan W. Richards, does not now have, and apparently never has had, power of attorney in this application. There is no record of power of attorney ever being given to the attorney making the request.

Steven N. Meyers
Special Programs Examiner
Technology Center 3600
(571) 272-6611

SNM/pav: 05/31/05

UNITED STATES PATENT AND TRADEMARK OFFICE

COMMISSIONER FOR PATENTS
UNITED STATES PATENT AND TRADEMARK OFFICE
P.O. BOX 1450
ALEXANDRIA, VA 22313-1450
www.uspto.gov

Paper No. 11

JAMES A. DEWBERRY
211 BLACK KETTLE LANE
ALPHARETTA, GA 30022

COPY MAILED

APR 0 7 2004

OFFICE OF PETITIONS

ON PETITION

In re Application of
Dewberry, James Arthur
Application No. 09/870,895
Filed: May 31, 2001
For: Adverturf

This is a decision on the petition under 37 CFR 1.137(b), filed August 7, 2003, to revive the above-identified application.

The petition is **DISMISSED**.

Any request for reconsideration must be submitted within TWO (2) MONTHS from the mail date of this decision. No further petition fee is required for the request. Extensions of time under 37 CFR 1.136(a) are permitted. The reconsideration request should include a cover letter entitled "Renewed Petition under 37 CFR 1.137(b)." This is **not** a final agency action within the meaning of 5 U.S.C. § 704.

The above-identified application became abandoned for failure to reply in a timely manner to the Notice of Non-Compliant Amendment under 37 CFR 1.121 (Notice) mailed September 18, 2002. The Notice set a period for reply of one (1) month from the mail date of the Notice. No extensions of time under the provisions of 37 CFR 1.136(a) were obtained. Accordingly, the above-identified application became abandoned on October 19, 2002. A Notice of Abandonment was mailed on February 20, 2003.

A grantable petition under 37 CFR 1.137(b) must be accompanied by:
(1) the required reply,[1]
(2) the petition fee,
(3) a statement that the entire delay in filing the required reply from the due date for the reply until the filing of a grantable petition pursuant to 37 CFR 1.137(b) was unintentional, and
(4) a terminal disclaimer and fee if the application was filed on or before June 8, 1995 or if the application is a design application.

Where there is a question as to whether either the abandonment or the delay in filing a petition under 37 CFR 1.137 was unintentional, the Commissioner may require additional information.[2]

The instant petition lacks items (2) and (3).

In regard to item (2), at the time the petition was submitted, the correct amount for the small entity petition fee was $650.00. Petitioner only submitted $640.00. Effective October 1, 2003, the petition fee increased to $665.00. Accordingly, an additional $25.00 must be submitted.

---

[1] In a nonprovisional application abandoned for failure to prosecute, the required reply may be met by the filing of a continuing application. In an application or patent, abandoned or lapsed for failure to pay the issue fee or any portion thereof, the required reply must be the payment of the issue fee or any outstanding balance thereof.

[2] See MPEP 711.03(c)(III)(C) and (D).

In regard to item (3), the instant petition contains a power of attorney appointing Donald E. Hayes, Jr., who is listed as INACTIVE and is unable to practice before the Patent and Trademark Office (Office). The Office does not communicate with attorneys or agents who have been suspended or excluded from practice. Accordingly, the Office action is being mailed to you as the inventor. Applicant may, of course, file a new power of attorney in the application to have a registered attorney or agent represent you before the Office. In the absence of an attorney or agent of record, all amendments and other papers filed in the application must be signed: (1) by you; or (2) if there is an assignee of record of an undivided part interest, by you and such assignee; or (3) if there is an assignee of the entire interest, by such assignee; or (4) by a registered patent attorney or agent, not of record, who acts in a representative capacity under the provisions of 37 CFR 1.34(a). Therefore, the statement that the entire delay in filing the required reply from the due date for the reply until the filing of a grantable petition pursuant to 37 CFR 1.137(b) was unintentional cannot be accepted at this time.

Accordingly, the Power of Attorney cannot be accepted at this time and all correspondence will continue to be sent to the address of record. The applicant may wish to resubmit the petition himself to revive the above-identified application.

Applicant may obtain a list of registered patent attorneys and agents located in your area by writing to the Commissioner of Patents and Trademarks, Box OED, Washington, DC 20231, or by calling the Office of Enrollment and Discipline at (703) 306-4097.

Further correspondence with respect to this matter should be addressed as follows:

By mail: Mail Stop PETITION
Commissioner for Patents
Post Office Box 1450
Alexandria, VA 22313-1450

Effective December 1, 2003, the Office of Petitions can no longer receive hand-carried correspondence, or facsimile transmissions of correspondence. The centralized location for hand-carried correspondence is the existing Customer Window located at:

2011 South Clark Place
Crystal Plaza 1 Lobby
Room 1B03
Arlington, VA 22202

The centralized facsimile number is **(703) 872-9306.**

Telephone inquiries should be directed to the undersigned at (703) 306-0482.

Liana Chase

Liana Chase
Petitions Examiner
Office of Petitions
Office of the Deputy Commissioner
for Patent Examination Policy

UNITED STATES PATENT AND TRADEMARK OFFICE

Commissioner for Patents
United States Patent and Trademark Office
P.O. Box 1450
Alexandria, VA 22313-1450
www.uspto.gov

Paper No. 15

DONALD E. HAYES, JR.
3097 WEMBLEY RIDGE
ATLANTA, GA 30340

COPY MAILED

JUN 2 2 2004

OFFICE OF PETITIONS

In re Application of	:	
Dewberry, James Arthur	:	
Application No. 09/870,895	:	ON PETITION
Filed: May 31, 2001	:	
Attorney Docket No. Dewberry 1	:	

This is a decision on the renewed petition under 37 C.F.R. § 1.137(b), filed June 11, 2004, to revive the above-identified application.

The petition is **GRANTED.**

The above-identified application became abandoned for failure to reply in a timely manner to the Notice of Non-Compliant Amendment under 37 CFR 1.121 (Notice) mailed September 18, 2002. The Notice set a period for reply of one (1) month from the mail date of the Notice. No extensions of time under the provisions of 37 CFR 1.136(a) were obtained. Accordingly, the above-identified application became abandoned on October 19, 2002. A Notice of Abandonment was mailed on February 20, 2003.

Petitioner has met the requirements to revive the above-identified application pursuant to 37 CFR 1.137(b).

The file is now being forwarded to Technology Center 3600 for further examination on the merits.

Telephone inquiries should be directed to the undersigned at (703) 306-0482.

Liana Chase
Petitions Examiner
Office of Petitions
Office of the Deputy Commissioner
for Patent Examination Policy

UNITED STATES PATENT AND TRADEMARK OFFICE

UNDER SECRETARY OF COMMERCE FOR INTELLECTUAL PROPERTY AND
DIRECTOR OF THE UNITED STATES PATENT AND TRADEMARK OFFICE
WASHINGTON, DC 20231
www.uspto.gov

Schwabe, Williamson & Wyatt, P.C.
Pacwest Center, Suites 1600-1900
1211 SW Fifth Avenue
Portland, OR 97204

MAILED

MAY 27 2003

DIRECTOR OF THE
TECHNOLOGY CENTER 3600

In re application of
Peter S. Banka et al.
Application No. 09/870,959
Filed: May 30, 2001
For: METHOD AND APPARATUS FOR PROVIDING NETWORK DEPENDENT APPLICATION SERVICES

DECISION ON REQUEST FOR WITHDRAWAL OF ATTORNEY

This is a decision on the request filed on March 6, 2003, under 37 CFR 1.36 and MPEP 402.06, requesting permission to withdraw as the attorney of record in the above-identified application.

The request is **NOT APPROVED**.

Under 37 CFR 1.36 an attorney may withdraw only upon application to and approval by the Commissioner. It should be noted that a withdrawal is effective when approved, not when filed. Besides giving due notice to his or her client and delivering to the client all papers and property to which the client is entitled as specified under 37 CFR 10.40, approval of such a request requires that the following conditions be met:

A) Each attorney of record must sign the notice of withdrawal, or the notice must contain a clear indication of one attorney signing on behalf of another, because the Office does not recognize law firms;

B) A proper reason for the withdrawal as enumerated in 37 CFR 10.40(b) or subsection (1)-(6) of 37 CFR 10.40(c) must be provided; and

C) If withdrawal is requested in accordance with 37 CFR 10.40(c) above, there must be at least 30 days between approval of the withdrawal and the later of the expiration date of a time period for reply or the expiration date of the period which can be obtained by a petition and fee for extension of time under 37 CFR 1.136(a).

The request to withdraw as attorney in the above-identified application is not approved because the request does not comply with condition B) above.

Given the statement included in the request that, "my firm no longer represents the Assignee"; it is not clear that the statement satisfies one of the valid reasons for withdrawal under 37 CFR 10.40 (b)(1)-(4) or (c)(1)-(6). Condition B) can be met by clearly specifying one of the valid reasons for withdrawal under 37 CFR 10.40 (b)(1)-(4) or (c)(1)-(6). Furthermore, there is nothing in the file record that indicates that the assignee is the client. Absent a 3.73(b) statement, the "client" referred to in 37 CFR 10.40 is seen as being those individuals who conferred power upon the attorneys, in this case the inventors.

Randolph A. Reese
Special Programs Examiner
Patent Technology Center 3600
(703) 308-2121
(703) 605-0586 (facsimile)

RAR/tpl: 4/18/03

UNITED STATES PATENT AND TRADEMARK OFFICE

COMMISSIONER FOR PATENTS
UNITED STATES PATENT AND TRADEMARK OFFICE
P.O. BOX 1450
ALEXANDRIA, VA 22313-1450
www.uspto.gov

PERKINS COIE LLP
PATENT-SEA
P.O. BOX 1247
SEATTLE, WA 98111-12471

MAILED

DEC 08 2003

DIRECTOR'S OFFICE
TECHNOLOGY CENTER 3600

In re application of
Peter S. Banka, et al.
Application No. 09/870,959
Filed: May 30, 2001
For: METHOD AND APPARATUS FOR PROVIDING NETWORK DEPENDENT APPLICATION SERVICES

Paper No. 13

DECISION ON REQUEST FOR WITHDRAWAL OF ATTORNEY

This is a decision on the request filed on June 10, 2003, under 37 CFR 1.36 and MPEP 402.06, requesting permission to withdraw as the attorney of record in the above-identified application.

The request is **NOT APPROVED as MOOT**.

Under 37 CFR 1.36 an attorney may withdraw only upon application to and approval by the Commissioner. It should be noted that a withdrawal is effective when approved, not when filed. Besides giving due notice to his or her client and delivering to the client all papers and property to which the client is entitled as specified under 37 CFR 10.40, approval of such a request requires that the following conditions be met:

A) Each attorney of record must sign the notice of withdrawal, or the notice must contain a clear indication of one attorney signing on behalf of another, because the Office does not recognize law firms;

B) A proper reason for the withdrawal as enumerated in 37 CFR 10.40(b) or subsection (1)-(6) of 37 CFR 10.40(c) must be provided; and

C) If withdrawal is requested in accordance with 37 CFR 10.40(c) above, there must be at least 30 days between approval of the withdrawal and the later of the expiration date of a time period for reply or the expiration date of the period which can be obtained by a petition and fee for extension of time under 37 CFR 1.136(a).

The request to withdraw as attorney in the above-identified application is not approved as moot because the power of attorney has already been withdrawn as per the Notice to that effect on November 26, 2003. The correspondence address has now been changed to the following:

PERKINS COIE LLP
PATENT-SEA
P.O. BOX 1247
SEATTLE, WA 98111-12471

Steven N. Meyers
Special Programs Examiner
Patent Technology Center 3600
(703) 308-3868

SNM/cps: 12/01/03

cc:

SCHWABE, WILLIAMSON & WYATT, P.C.
PACWEST CENTER, SUITES 1600-1900
1211 SW FIFTH AVENUE
PORTLAND, OR 97204

UNITED STATES PATENT AND TRADEMARK OFFICE

Commissioner for Patents
United States Patent and Trademark Office
P.O. Box 1450
Alexandria, VA 22313-1450
www.uspto.gov

PERKINS COIE LLP
PATENT-SEA
P.O. BOX 1247
SEATTLE WA 98111-1247

MAILED

SEP 10 2009

OFFICE OF PETITIONS

In re Patent No. 7,003,481	:	
Issue Date: February 21, 2006	:	
Application No. 09/870,959	:	ON PETITION
Filed: May 30, 2001	:	
Attorney Docket No. 345188001US1	:	

This is a decision on the petition under 37 CFR 1.137(b), filed April 9, 2009, to revive the above-identified application.

The petition is **DISMISSED** as moot.

In reply to the Notice of Allowance and Issue Fee(s) Due mailed September 30, 2005, the issue fee was duly paid on December 8, 2005.

On February 21, 2006, U.S. Patent No. 7,003,481 issued on the instant application.

The instant petition was filed April 9, 2009.

Petitioner states that the above-identified application may have become abandoned pursuant to 35 U.S.C. 12 2(b)(2)(B)(iii) for failure to timely notify the Office of the filing of an application in a foreign country or under a multinational international treaty that requires publication of applications eighteen months after filing. Accordingly, petitioner requests that, if the USPTO deems it necessary, the patentee's failure to timely file a Rescission of Previous Nonpublication Request (35 U.S.C. 122(b)(2)(B)(ii)) and, if applicable, Notice of Foreign Filing (35 U.S.C. 122(b)(2)(B)(iii)) be corrected and the Petition for Revival of an Application for Patent Abandoned for Failure to Notify the Office of a Foreign or International Filing (37 CFR 1.137(f)) be retroactively accepted should the USPTO deem it necessary.

As set forth in MPEP 1305:

> Once the patent has been granted, the U.S. Patent and Trademark Office can take no action concerning it, except as provided in 35 U.S.C. 135, 35 U.S.C. 251 through 256, 35 U.S.C. 302 through 307 and 35 U.S.C. 311 through 316.

Accordingly, once the patent is granted, the Office has no jurisdiction over the patent. Also, see *Aristocrat Technologies Australia v. International Game Technologies* 2008 U.S. App. LEXIS 20060 (Fed. Cir. 2008) "[p]rocedural lapses during examination, should they occur, do not provide grounds of invalidity. Absent proof of inequitable conduct, the examiner's or the applicant's absolute compliance with the internal rules of patent examination becomes irrelevant after the patent has issued." The case was decided September 22, 2008.

Further correspondence with respect to this matter should be addressed as follows:

By Mail: Mail Stop PETITION
Commissioner for Patents
Post Office Box 1450
Alexandria, VA 22313-1450

By hand: U. S. Patent and Trademark Office
Customer Service Window, Mail Stop Petitions
Randolph Building
401 Dulany Street
Alexandria, VA 22314

The centralized facsimile number is **(571) 273-8300.**

Telephone inquiries should be directed to the undersigned at 571-272-7099.

David Bucci
Petitions Examiner
Office of Petitions

UNITED STATES PATENT AND TRADEMARK OFFICE

COMMISSIONER FOR PATENTS
UNITED STATES PATENT AND TRADEMARK OFFICE
WASHINGTON, D.C. 20231
www.uspto.gov

#3

KM:9-01

Paper No. 5

COPY MAILED

SEP 28 2001

OFFICE OF PETITIONS

BENNET K. LANGLOTZ P.C.
2850 S.W. FAIRMOUNT BLVD.
PORTLAND, OR 97201

In re Application of :
Walsh :
Filed: 30 May, 2001 :
Application No. 09/870,969 :
Attorney Docket No. AA-018 :

DECISION REFUSING STATUS
UNDER 37 C.F.R. §1.47(B)

This is a decision on the petition under 37 C.F.R. §1.47(B),[1] filed on 10 September, 2001.

The petition is **DISMISSED**.

NOTE: Any request for reconsideration of this decision must be submitted within TWO (2) MONTHS from the mail date of this decision. Extensions of time under 37 C.F.R. §1.136(a) are permitted. Any response should be entitled "Request for Reconsideration of Petition Under 37 C.F.R. §1.47(a)" and may include an oath or declaration executed by the inventor.

Failure to respond will result in abandonment of the application.

---

[1] The regulations at 37 C.F.R. §1.47 provide:
§ 1.47 Filing when an inventor refuses to sign or cannot be reached.
(a) If a joint inventor refuses to join in an application for patent or cannot be found or reached after diligent effort, the application may be made by the other inventor on behalf of himself or herself and the nonsigning inventor. The oath or declaration in such an application must be accompanied by a petition including proof of the pertinent facts, the fee set forth in § 1.17(h), and the last known address of the nonsigning inventor. The nonsigning inventor may subsequently join in the application by filing an oath or declaration complying with § 1.63.
(b) Whenever all of the inventors refuse to execute an application for patent, or cannot be found or reached after diligent effort, a person to whom an inventor has assigned or agreed in writing to assign the invention, or who otherwise shows sufficient proprietary interest in the matter justifying such action, may make application for patent on behalf of and as agent for all the inventors. The oath or declaration in such an application must be accompanied by a petition including proof of the pertinent facts, a showing that such action is necessary to preserve the rights of the parties or to prevent irreparable damage, the fee set forth in § 1.17(h), and the last known address of all of the inventors. An inventor may subsequently join in the application by filing an oath or declaration complying with § 1.63.
(c) The Office will send notice of the filing of the application to all inventors who have not joined in the application at the address(es) provided in the petition under this section, and publish notice of the filing of the application in the *Official Gazette*. The Office may dispense with this notice provision in a continuation or divisional application, if notice regarding the filing of the prior application was given to the nonsigning inventor(s).
[47 Fed. Reg. 41275, Sept. 17, 1982, effective Oct. 1, 1982; 48 Fed. Reg. 2709, Jan. 20, 1983, effective Feb. 27, 1983; revised, 62 Fed. Reg. 53131, Oct. 10, 1997, effective Dec. 1, 1997; revised, 65 Fed. Reg. 54604, Sept. 8, 2000, effective Nov. 7, 2000]

BACKGROUND

The record indicates:

- the application was filed on 30 May, 2001, without an oath or declaration executed by the sole inventor, Fiona Walsh;
- accordingly, a Notice to File Missing Parts of Application was mailed on 15 June, 2001, requiring an executed oath or declaration, and a surcharge for the late filing;
- a declaration executed by an officer of Avenue A, Inc. on behalf of the inventor, the surcharge, a one-month extension of time fee, and a petition (and petition fee) were filed on 9 September, 2001.

ANALYSIS

Petitioner has failed to provide:

- proof that Avenue A, Inc., has a proprietary interest in the subject matter of the invention, such as a copy of an assignment and/or employment contract, or other evidence of proprietary interest to justify the filing of the application;[2]
- proof of the pertinent facts establishing that the inventor was first presented with a copy of the complete application, yet refuses to sign or cannot be found or reached after diligent effort;[3]
- a declaration in compliance with 37 C.F.R. §1.63, stating the full name, residence, post office address, and citizenship of the non-signing inventor

A copy of the application papers must be sent to the last known address of the non-signing inventor with a request that he/she sign the declaration for the patent application. A forwarding address should be requested. If the

---

[2] See MPEP 409.03(f)

[3] The submission should include: (a) a declaration of the registered attorney(s)/agent(s) and other authority(ies) attempting the contact, outlining the efforts and the results; and (b) documentation (such as a copy of the transmittal letter(s) and delivery disposition document(s) supporting that (those) declaration(s).

papers are returned, and other attempts to locate the inventor, e.g. through e-mail or the telephone, continue to fail, then applicant will have established that the inventor cannot be reached. Alternatively, an oath or declaration for the patent application in compliance with 37 C.F.R. §§1.63 and 1.64 must be presented. The declaration must set forth the inventor's residence, citizenship and post office address. An oath or declaration in compliance with 37 C.F.R. §§1.63 and 1.64 signed by the Rule 1.47 applicant is required.[4]

Further correspondence with respect to this matter should be addressed as follows:

By mail: Commissioner of Patents and Trademarks
Box DAC
Washington, D.C. 20231

By FAX: (703) 308-6916
Attn: Office of Petitions

By hand: Crystal Plaza Four, Suite CP4-3C23
2201 South Clark Place
Arlington, VA 22202

Telephone inquiries concerning this matter may be directed to Petitions Attorney John J. Gillon, Jr., at (703) 305-9199.

John J. Gillon, Jr.
Attorney
Office of Petitions
Office of the Deputy Commissioner
for Patent Examination Policy

[4] See: MPEP 409.03(b).

UNITED STATES PATENT AND TRADEMARK OFFICE

COMMISSIONER FOR PATENTS
UNITED STATES PATENT AND TRADEMARK OFFICE
WASHINGTON, D.C. 20231
www.uspto.gov

JJGJr: 02-02
Paper No. 8

BENNET K. LANGLOTZ P.C.
2850 S.W. FAIRMOUNT BLVD.
PORTLAND, OR 97201

COPY MAILED

FEB 27 2002

OFFICE OF PETITIONS

In re Application of	:	DECISION DISMISSING
Walsh	:	AS MOOT FOR JOINDER
Filed: 30 May, 2001	:	PETITION UNDER
Application No. 09/870,969	:	37 C.F.R. §1.47(B)
Attorney Docket No. AA-018	:	

Papers filed via FAX on 26 February, 2002 (and originally submitted via First Class Mail (USPS)over a mail certificate of 19 October, 2001),[1] in response to a "Decision Refusing Status Under 37 C.F.R. 1.47(b)"[2] (Rule 1.47(b)) mailed on 28 September, 2001, included a Declaration signed by a previously non-signing inventor in compliance with 37 C.F.R. §1.63.[3]

---

[1] As of this writing, this material has not been received via the USPS.

[2] The regulations at 37 C.F.R. §1.47 provide in pertinent part:
§ 1.47 Filing when an inventor refuses to sign or cannot be reached.

* * *

(b) Whenever all of the inventors refuse to execute an application for patent, or cannot be found or reached after diligent effort, a person to whom an inventor has assigned or agreed in writing to assign the invention, or who otherwise shows sufficient proprietary interest in the matter justifying such action, may make application for patent on behalf of and as agent for all the inventors. The oath or declaration in such an application must be accompanied by a petition including proof of the pertinent facts, a showing that such action is necessary to preserve the rights of the parties or to prevent irreparable damage, the fee set forth in § 1.17(h), and the last known address of all of the inventors. An inventor may subsequently join in the application by filing an oath or declaration complying with § 1.63.

* * *

[47 Fed. Reg. 41275, Sept. 17, 1982, effective Oct. 1, 1982; 48 Fed. Reg. 2709, Jan. 20, 1983, effective Feb. 27, 1983; revised, 62 Fed. Reg. 53131, Oct. 10, 1997, effective Dec. 1, 1997; revised, 65 Fed. Reg. 54604, Sept. 8, 2000, effective Nov. 7, 2000]

[3] The regulations at 37 C.F.R. §1.47 provide:
§ 1.63 Oath or declaration.
(a) An oath or declaration filed under § 1.51(b)(2) as a part of a nonprovisional application must:
(1) Be executed, *i.e.*, signed, in accordance with either § 1.66 or § 1.68. There is no minimum age for a person to be qualified to sign, but the person must be competent to sign, *i.e.*, understand the document that the person is signing;
(2) Identify each inventor by full name, including the family name, and at least one given name without abbreviation together with any other given name or initial;
(3) Identify the country of citizenship of each inventor; and
(4) State that the person making the oath or declaration believes the named inventor or inventors to be the original and first inventor or inventors of the subject matter which is claimed and for which a patent is sought.
(b) In addition to meeting the requirements of paragraph (a) of this section, the oath or declaration must also:
(1) Identify the application to which it is directed;
(2) State that the person making the oath or declaration has reviewed and understands the contents of the application, including the claims, as amended by any amendment specifically referred to in the oath or declaration; and
(3) State that the person making the oath or declaration acknowledges the duty to disclose to the Office all information known to the person to be material to patentability as defined in §1.56.
(c) Unless such information is supplied on an application data sheet in accordance with § 1.76, the oath or declaration must also identify:
(1) The mailing address, and the residence if an inventor lives at a location which is different from where the inventor customarily receives mail, of each inventor; and
(2) Any foreign application for patent (or inventor's certificate) for which a claim for priority is made pursuant to § 1.55, and any foreign application having a filing date before that of the application on which priority is claimed, by specifying the application number, country,

In view of joinder of the inventor, further consideration under Rule 1.47(b) is unnecessary and the petition is considered moot. This application does not have Rule 1.47 status and no such status should appear on the file wrapper. This application need not be returned to this Office for further consideration under Rule 1.47(b).

This application is being returned to OIPE for further processing as required consistent with this decision, and thereafter to the assigned Technology Center for processing in due course.

Telephone inquiries concerning this decision may be directed to the undersigned at (703) 305-9199.

John J. Gillon, Jr.
Senior Attorney
Office of Petitions
Office of the Deputy Commissioner
for Patent Examination Policy

---

day, month, and year of its filing.
(d)(1) A newly executed oath or declaration is not required under § 1.51(b)(2) and § 1.53(f) in a continuation or divisional application, provided that:
(i) The prior nonprovisional application contained an oath or declaration as prescribed by paragraphs (a) through (c) of this section;
(ii) The continuation or divisional application was filed by all or by fewer than all of the inventors named in the prior application;
(iii) The specification and drawings filed in the continuation or divisional application contain no matter that would have been new matter in the prior application; and
(iv) A copy of the executed oath or declaration filed in the prior application, showing the signature or an indication thereon that it was signed, is submitted for the continuation or divisional application.
(2) The copy of the executed oath or declaration submitted under this paragraph for a continuation or divisional application must be accompanied by a statement requesting the deletion of the name or names of the person or persons who are not inventors in the continuation or divisional application.
(3) Where the executed oath or declaration of which a copy is submitted for a continuation or divisional application was originally filed in a prior application accorded status under § 1.47, the copy of the executed oath or declaration for such prior application must be accompanied by:
(i) A copy of the decision granting a petition to accord § 1.47 status to the prior application, unless all inventors or legal representatives have filed an oath or declaration to join in an application accorded status under § 1.47 of which the continuation or divisional application claims a benefit under 35 U.S.C. 120, 121, or 365(c); and
(ii) If one or more inventor(s) or legal representative(s) who refused to join in the prior application or could not be found or reached has subsequently joined in the prior application or another application of which the continuation or divisional application claims a benefit under 35 U.S.C. 120, 121, or 365(c), a copy of the subsequently executed oath(s) or declaration(s) filed by the inventor or legal representative to join in the application.
(4) Where the power of attorney (or authorization of agent) or correspondence address was changed during the prosecution of the prior application, the change in power of attorney (or authorization of agent) or correspondence address must be identified in the continuation or divisional application. Otherwise, the Office may not recognize in the continuation or divisional application the change of power of attorney (or authorization of agent) or correspondence address during the prosecution of the prior application.
(5) A newly executed oath or declaration must be filed in a continuation or divisional application naming an inventor not named in the prior application.
(e) A newly executed oath or declaration must be filed in any continuation-in-part application, which application may name all, more, or fewer than all of the inventors named in the prior application.
[48 Fed. Reg. 2711, Jan. 20, 1983, added effective Feb. 27, 1983; 48 Fed. Reg. 4285, Jan. 31, 1983; paras. (b)(3) and (d), 57 Fed. Reg. 2021, Jan. 17, 1992, effective Mar. 16, 1992; para. (a) revised, 60 Fed. Reg. 20195, Apr. 25, 1995, effective June 8, 1995; paras. (a) & (d) revised, para. (e) added, 62 Fed. Reg. 53131, Oct. 10, 1997, effective Dec. 1, 1997; paras. (a), (b), (c), and (e) revised, 65 Fed. Reg. 54604, Sept. 8, 2000, effective Nov. 7, 2000]

UNITED STATES PATENT AND TRADEMARK OFFICE

COMMISSIONER FOR PATENTS
UNITED STATES PATENT AND TRADEMARK OFFICE
P.O. BOX 1450
ALEXANDRIA, VA 22313-1450
www.uspto.gov

Paper No. 9

WARE FRESSOLA VAN DER SLUYS & ADOLPHSON, LLP
BRADFORD GREEN BUILDING 5
755 MAIN STREET
P.O. BOX 224
MONROE, CT 06468

COPY MAILED

NOV 0 5 2003

OFFICE OF PETITIONS

In re Application of
Reynolds et al.
Application No. 09/871,001
Filed: May 31, 2001
Attorney Docket No. P1039B/N8515

ON PETITION

This is a decision on the petition under 37 C.F.R. § 1.137(b), filed October 6, 2003, to revive the above-identified application.

The petition is **granted.**

This application became abandoned for failure to timely reply within three months to the non-final Office action mailed February 13, 2003. No extensions of time under the provisions of 37 CFR 1.136(a) were obtained. Accordingly, this application became abandoned on May 14, 2003.

Petitioner has met the requirements to revive the above-identified application pursuant to 37 CFR 1.137(b).

If the person signing the instant petition desires to receive future correspondence regarding this application, the appropriate power of attorney or authorization of agent must be submitted. While a courtesy copy of this decision is being mailed to the person signing the instant petition, all future correspondence will be directed solely to the address currently of record until such time as appropriate instructions are received to the contrary.

The file is now being forwarded to Technology Center 1700 for further examination on the merits.

Telephone inquiries should be directed to Paralegal Liana Chase at (703) 306-0482.

Karen Creasy for

Frances Hicks
Petitions Examiner
Office of Petitions
Office of the Deputy Commissioner
for Patent Examination Policy

cc: James R. Cartiglia
Waddey & Patterson, P.C.
414 Union Street, Suite 2020
Nashville, TN 37219

UNITED STATES PATENT AND TRADEMARK OFFICE

COMMISSIONER FOR PATENTS
UNITED STATES PATENT AND TRADEMARK OFFICE
WASHINGTON, DC 20231
www.uspto.gov

Paper No. 8

MAIL

SEP 0 2 2003

DIRECTOR OFFICE
TECHNOLOGY CENTER 2600

TURAN P. ODABASI
SPECIAL ASSISTANT GENERAL COUNSEL
INTELLECTUAL PROPERTY
UNIVERSITY OF NEBRASKA
228 VARNER HALL
LINCOLN, NE 68583-0745

DECISION
ON PETITION

In re Application of:
Frohman et al.
Application No. 09/871,016
Filed: May 31, 2001
For: **SOUND GENERATING APPARATUS FOR USE WITH GLOVES AND SIMILAR ARTICLES**

This is a decision on the petition filed June 2, 2003 to reset the period for reply under MPEP § 710.06, which is being treated under 37 C.F.R. § 1.181(a) to withdraw the holding of abandonment. No fee is required.

A non-final Office action was mailed to the address of record on December 19, 2002. The application file is in an abandoned status for failure to respond to the non-final Office action mailed December 19, 2002. A Notice of Abandonment has not been mailed.

Petitioner asserts that the non-final Office action was never received, but that a copy was received by facsimile on May 30, 2003.

A review of the record indicates that the non-final Office action was not properly mailed to the practitioner of record in that the action was sent to an incorrect mailing address. Thus, there was an irregularity in mailing the non-final Office action on the part of the U.S. Patent and Trademark Office.

Accordingly, the petition is **GRANTED**.

The Notice of Abandonment is hereby vacated and the holding of abandonment withdrawn.

The application file is being forwarded to the Technology Center's technical support staff for correcting the address of record to that shown in the declaration and power of attorney and for re-mailing the non-final Office action. The three (3) month time period for responding to the non-final Office action will be set to run from the date of the mailing thereof.

Jin F. Ng, Director
Technology Center 2600
Communications

UNITED STATES PATENT AND TRADEMARK OFFICE

Commissioner for Patents
United States Patent and Trademark Office
P.O. Box 1450
Alexandria, VA 22313-1450
www.uspto.gov

Paper No. 22

TURAN P. ODABASI
SPECIAL ASSISTANT GENERAL COUNSEL
UNIVERSITY OF NEBRASKA
228 VARNER HALL
LINCOLN NE 68583-0745

COPY MAILED

JAN 21 2005

OFFICE OF PETITIONS

ON PETITION

In re Application of :
Jan A. Frohman et al :
Application No. 09/871,016 :
Filed: May 31, 2001 :
Attorney Docket No. UNVN :

This is a decision on the petition, filed January 21, 2005, under 37 CFR 1.313(c)(2) to withdraw the above-identified application from issue after payment of the issue fee.

The petition is **GRANTED.**

The above-identified application is withdrawn from issue for consideration of a submission under 37 CFR 1.114 (request for continued examination). See 37 CFR 1.313(c)(2).

Petitioner is advised that the issue fee paid on August 12, 2004 in the above-identified application cannot be refunded. If, however, the above-identified application is again allowed, petitioner may request that it be applied towards the issue fee required by the new Notice of Allowance.[1]

The file does not indicate a change of address has been submitted, although the address given on the petition differs from the address of record. If appropriate, a change of address should be filed in accordance with MPEP 601.03. A courtesy copy of this decision is being mailed to the address given on the petition; however, the Office will mail all future correspondence solely to the address of record.

---

[1] The request to apply the issue fee to the new Notice may be satisfied by completing and returning the new Issue Fee Transmittal Form PTOL-85(b), which includes the following language thereon: "Commissioner for Patents is requested to apply the Issue Fee and Publication Fee (if any) or re-apply any previously paid issue fee to the application identified above." Petitioner is advised that, whether a fee is indicated as being due or not, the Issue Fee Transmittal Form **must** be completed and timely submitted to avoid abandonment. Note the language in bold text on the first page of the Notice of Allowance and Fee(s) Due (PTOL-85).

Telephone inquiries should be directed to the undersigned at (703) 305-8859.

After receipt of the file in the Office of Petitions, the application will be forwarded to Technology Center AU 2632 for processing of the request for continued examination under 37 CFR 1.114.

Karen Creasy

Karen Creasy
Petitions Examiner
Office of Petitions
Office of the Deputy Commissioner
for Patent Examination Policy

cc:
SHOOK, HARDY & BACON LLP
2555 GRAND BOULEVARD
KANSAS CITY, MISSOURI 64108

UNITED STATES PATENT AND TRADEMARK OFFICE

COMMISSIONER FOR PATENTS
UNITED STATES PATENT AND TRADEMARK OFFICE
P.O. BOX 1450
ALEXANDRIA, VA 22313-1450
www.uspto.gov

Paper No. 7

MAIL

DEC 3 1 2003

DIRECTOR OFFICE
TECHNOLOGY CENTER 2100

Carl M. Davis
Baker, Donelson, Bearman & Caldwell
Five Concourse Parkway
Suite 900
Atlanta, Georgia 30328

In re Application of: Martin Morris	)	
Application No.: 09/871,097	)	**DECISION ON PETITION**
Filed: May 31, 2001	)	**UNDER 37 C.F.R. § 1.181 TO**
For: APPARATUS AND METHOD FOR	)	**WITHDRAW HOLDING OF**
FACILITIES MAINTENANCE	)	**ABANDONMENT**
MANAGEMENT	)	

This decision is in response to the petition filed November 24, 2003 under 37 C.F.R. § 1.181 requesting the Withdrawal of the Holding of Abandonment in the above identified application.

This application was held abandoned for failure to file a timely response to the Office action of mail date March 26, 2003. A Notice of Abandonment was mailed on November 4, 2003.

In support of the petition, Petitioner provides a copy of (1) an amendment filed in response to the Office action of mail date March 26, 2003, (2) a petition for a three-month extension of time indicating that a check for $465 was attached and an authorization to charge any necessary fees to Deposit Account No. 11-0553, and (3) a post card with a PTO stamp indicating receipt at the USPTO on September 29, 2003 of the aforementioned items. Each of items 1-2 carries a Certificate of mailing bearing the date of deposit of September 26, 2003. Office records reflect that the $465.00 payment was posted to the application on October 2, 2003.

M.P.E.P. § 503 states:

> A post card receipt which itemizes and properly identifies the items which are being filed serves as *prima facie* evidence of receipt in the USPTO of all the items listed thereon on the date stamped thereon by the USPTO.

Petitioner has established that a response was timely filed on September 26, 2003 with the requisite fee for a three-month extension of time necessary for the response to be considered timely and that the Abandonment was the result of Office error in not matching the response to the application file.

The petition is **GRANTED**. The Notice of Abandonment is **WITHDRAWN**.

The application file is being forwarded to the Technology Center support staff for processing of the amendment. After processing, the application will then be forwarded to the Examiner for appropriate action.

Pinchus M. Laufer
Special Programs Examiner
Technology Center 2100
Computer Architecture, Software, and Information Security
(703) 306-4160

UNITED STATES PATENT and TRADEMARK OFFICE

COMMISSIONER FOR PATENTS
UNITED STATES PATENT AND TRADEMARK OFFICE
P.O. BOX 1450
ALEXANDRIA, VA 23313-1450
WWW.USPTO.GOV

Mailed:

DWW
Paper No. _____

In re Application of
Lin Wang et al.
Serial No.: 09/871,099
Filed: May 31, 2001

For: CATALYSTS FOR OLEFIN POLYMERIZATION

DECISION ON PETITION UNDER *37 CFR 1.48(b)*

This is a decision on the request for CORRECTION OF INVENTORSIP UNDER 37 C.F.R. 1.48(b) (herein treated as PETITION TO DELETE CORRECTLY NAMED PERSON WHO IS NOT INVENTOR OF INVENTION NOW BEING CLAIMED) filed July 26, 2004 to correct inventorship under 37 CFR 1.48(b) by deleting the name of Elizabeth Forrester McCord from the list of inventors of the instant application.

It is noted that the applicant has met the requirements of (1) a petition including a statement identifying each named inventor who is being deleted and acknowledging that the inventor's invention is no longer being claimed in the application; and (2) the fee set forth in 37 CFR 1.17(i).

The petition is **GRANTED**.

The application file is being forwarded to the appropriate section of the Patent and Trademark Office for correction of the record.

David W. Wu
Supervisory Patent Examiner
Art Unit 1713
Technology Center 1700

E I DU PONT DE NEMOURS
AND COMPANY
Legal Patent Records Center
Barley Mill Plaza 25/1128
4417 Lancaster Pike
Wilmington DE 19805

DATE 4/29/08

~~APPLICATION~~ Patent NUMBER 6899503

DOC CODE COCX

DOC DATE ~~COCX~~ 4/24/08

DELIVER THE ATTACHED FILE/DOCUMENT TO THE TC SCANNING CENTER

CONTRACTOR: THE ATTACHED FILE/DOCUMENT MUST BE INDEXED AND SCANNED INTO IFW WITHIN **8** WORK HOURS; UPLOADING OF THE SCANNED IMAGES SHOULD OCCUR NO LATER THAN **16** WORK HOURS FOLLOWING RECEIPT OF THIS REQUEST

AFTER SCANNING, ORIGINAL DOCUMENTS SHOULD BE BOXED IN ACCORDANCE WITH INSTRUCTIONS

SPE RESPONSE FOR CERTIFICATE OF CORRECTION

Paper No.: _____

DATE : 4/24/08

TO SPE OF : ART UNIT 3677

SUBJECT : Request for Certificate of Correction on Patent No.: 6899503

A response is requested with respect to the accompanying request for a certificate of correction.

Please complete this form and return with file, within 7 days to:
Palm location **7580, Certificates of Correction Branch – South Tower – 9A22**
If response is for an IFW, **return to employee (named below) via PUBSCofC Team in MADRAS.**
With respect to the change(s) requested, correcting Office and/or Applicant's errors, should the patent read as shown in the certificate of correction (COCIN)? No new matter should be introduced, nor should the scope or meaning of the claims be changed.

Valerie Jackson

Thank You For Your Assistance

Certificates of Correction Branch
Tel. No. 703-308-9390 ext. 114

The request for issuing the above-identified correction(s) is hereby:
Note your decision on the appropriate box.

- ☒ **Approved** — All changes apply.
- ☐ **Approved in Part** — Specify below which changes **do not** apply.
- ☐ **Denied** — State the reasons for denial below.

Comments:

Vit Bot
SPE

3677
Art Unit

UNITED STATES PATENT AND TRADEMARK OFFICE

Commissioner for Patents
United States Patent and Trademark Office
P.O. Box 1450
Alexandria, VA 22313-1450
www.uspto.gov

ATTN: WILLIAM D. MILLER
3M INNOVATIVE PROPERTIES COMPANY
P.O. BOX 33427
ST. PAUL, MN 55133-3427

COPY MAILED

AUG 0 2 2004

OFFICE OF PETITIONS

In re Application of :
Richard C. Allen et al :
Application No. 09/871,130 :
Filed: May 31, 2001 :
Attorney Docket No. 7780.453USD1

ON PETITION

This is a decision on the petition, filed July 28, 2004, under 37 CFR 1.313(c)(2) to withdraw the above-identified application from issue after payment of the issue fee.

The petition is GRANTED.

The above-identified application is withdrawn from issue for consideration of a submission under 37 CFR 1.114 (request for continued examination). See 37 CFR 1.313(c)(2).

Petitioner is advised that the issue fee paid on July 1, 2004 in the above-identified application cannot be refunded. If, however, the above-identified application is again allowed, petitioner may request that it be applied towards the issue fee required by the new Notice of Allowance.[1]

The file does not indicate a change of address has been submitted, although the address given on the petition differs from the address of record. If appropriate, a change of address should be filed in accordance with MPEP 601.03. A courtesy copy of this decision is being mailed to the address given on the petition; however, the Office will mail all future correspondence solely to the address of record.

Telephone inquiries should be directed to Irvin Dingle at (703) 306-5684.

The file will be forwarded to Technology Center AU 2872 for processing of the request for continued examination under 37 CFR 1.114 and for consideration of the concurrently filed Information Disclosure Statement.

Irvin Dingle
Petitions Examiner
Office of Petitions
Office of the Deputy Commissioner
for Patent Examination Policy

cc:

Merchant & Gould P.C.
P.O. Box 2903
Minneapolis, MN 55402-0903

---

[1] The request to apply the issue fee to the new Notice may be satisfied by completing and returning the new Issue Fee Transmittal Form PTOL-85(b), which includes the following language thereon: Commissioner for Patents is requested to apply the Issue Fee and Publication Fee (if any) or re-apply any previously paid issue fee to the application identified above. Petitioner is advised that, whether a fee is indicated as being due or not, the Issue Fee Transmittal Form **must** be completed and timely submitted to avoid abandonment. Note the language in bold text on the first page of the Notice of Allowance and Fee(s) Due (PTOL-85).

This Page Is Inserted by IFW Operations
and is not a part of the Official Record

BEST AVAILABLE IMAGES

Defective images within this document are accurate representations of the original documents submitted by the applicant.

Defects in the images may include (but are not limited to):

- BLACK BORDERS
- TEXT CUT OFF AT TOP, BOTTOM OR SIDES
- FADED TEXT
- ILLEGIBLE TEXT
- SKEWED/SLANTED IMAGES
- COLORED PHOTOS
- BLACK OR VERY BLACK AND WHITE DARK PHOTOS
- GRAY SCALE DOCUMENTS

IMAGES ARE BEST AVAILABLE COPY.

As rescanning documents *will not* correct images, please do not report the images to the Image Problem Mailbox.

UNITED STATES PATENT AND TRADEMARK OFFICE

COMMISSIONER FOR PATENTS
UNITED STATES PATENT AND TRADEMARK OFFICE
P.O. BOX 1450
ALEXANDRIA, VA 22313-1450
www.uspto.gov

RICHARD D. EGAN
O'KEEFE EGAN & PETERMAN LLP
BUILDING C, SUITE 200
1101 CAPITAL OF TEXAS HIGHWAY SOUTH
AUSTIN, TX 78746

COPY MAILED
JUN 0 1 2004
OFFICE OF PETITIONS

In re Application of	:
Scott C. Johnson, et al.	:DECISION ON PETITIONS
Application No. 09/871,134	:UNDER 37 CFR 1.181; 37
Filed: May 31, 2001	:CFR 1.183 AND 37 CFR
Attorney Docket No. SURG:158	:1.137(b)

This is a decision on the papers titled "Petition Concerning Notice of Foreign Filing a Foreign Application of a U.S. Patent Application For Which A Nonpublication Request Was Rescinded Under 35 USC 122(b)(2), " filed August 22, 2003. The petition is being treated as a petition under 37 CFR 1.181, 37 CFR 1.183, and 37 CFR 1.137(b).

The petition under 37 CFR 1.181 is **DISMISSED.**

The petition under 37 CFR 1.183 is **DISMISSED.**

The petition under 37 CFR 1.137(b) is **GRANTED**.

BACKGROUND

The above-identified application was filed on May 31, 2001. With the filing, applicants included a Request and Certification under 35 U.S.C. 122(b)(2)(B)(i) requesting that the application not be published. The nonpublication request reads:

> I hereby certify that the invention disclosed in the attached application **has not been and will not be** the subject of an application filed in another country, or under a multilateral agreement, that requires publication at eighteen months after filing. I hereby request that the attached application not be published under 35 U.S.C. 122(b). [Emphasis applicants.]

On November 2, 2001, applicants filed a counterpart international application relating to the subject matter of the above-identified application. Applicants provided the notice of the foreign filing as required by 35 U.S.C. § 122(b)(2)(B)(iii) and 37 CFR 1.213(c) when applicants filed this petition on August 22, 2003.

On January 3, 2002, applicants filed a Request to Rescind Nonpublication Request (35 U.S.C. § 122(b)(2)(B()(ii)), which bears a certificate of mailing date under 37 CFR 1.8 of October 18, 2001. This request stated that "I hereby rescind the previous request that the above-identified application not be published under 35 U.S.C. 122(b)." The rescission request does not make any mention of the fact that this application is, has been or will be the subject of an application filed in another country, or under a multilateral agreement, that requires publication at eighteen months after filing.

On August 22, 2003, applicants filed the instant petition and stated that the invention disclosed in the above-identified application was filed in a foreign country on November 2, 2001. From these dates, the notice of the foreign filing as required by 35 U.S.C. 122(b)(2)(B(iii) was not filed within 45 days after the date of filing of the international application.

STATUTE AND LEGISLATIVE HISTORY

35 U.S.C. 122(b)(2)(B) states, in pertinent part:

> (i) If an applicant makes a request upon filing, certifying that the invention disclosed in the application has not and will not be the subject of an application filed in another country, or under a multilateral international agreement, that requires publication of applications 18 months after filing, the application shall not be published as provided in paragraph (1).
>
> (ii) **An applicant may rescind a request made under clause (i) at any time**.
>
> (iii) An applicant who has made a request under clause (i) but who subsequently files, in a foreign country or under a multilateral international agreement specified in clause (i), an application directed to the invention disclosed in the application filed in the Patent and Trademark Office, shall notify the Director of such filing not later than 45 days after the date of the filing of such foreign or international application. **A**

> **failure of the applicant to provide such notice within the prescribed period shall result in the application being regarded as abandoned**, unless it is shown to the satisfaction of the Director that the delay in submitting the notice was unintentional.
>
> (iv) If an applicant rescinds a request made under clause (i) **or** notifies the Director that an application was filed in a foreign country or under a multilateral international agreement specified in clause (i), the application shall be published in accordance with the provisions of paragraph (1) on or as soon as is practical after the date that is specified in clause (i).[1]

The Congressional record explains that, if applicant has requested nonpublication because the application will not be filed "in a foreign country with a publication requirement, subparagraph (B)(iii) imposes a duty on the applicant to notify the Director of this fact. An unexcused failure to notify the Director will result in abandonment of the application." See 145 Cong. Rec. S14,718 (November 17, 1999).

PETITIONS UNDER 37 CFR 1.181 AND 1.183

Requested Relief under 37 CFR 1.181

As to the petition under **37 CFR 1.181**, applicants have requested that the foreign application filed by transmittal of PCT Application Serial No. PCT/US01/46144 by Express Mail on November 2, 2001, which included information identifying the above-captioned application by title, inventors, filing date and application number, be regarded as satisfying the notification of foreign filing requirements of 35 U.S.C. § 122(b)(2)(B)(iii).

Decision on Petition under 37 CFR 1.181

The argument that the filing of the PCT application satisfied the notification requirement of 35 U.S.C. § 122(b)(2)(B)(iii) of foreign filing is not persuasive. 37

[1] Emphasis added.

CFR 1.213(c) requires the applicant to provide notice, and 37 CFR 1.4(b) provides that each application must be complete in itself. An international application would not be placed into the file of an application that it relies upon for the benefit of an earlier filing date, and so applicant was required to file a separate paper pursuant to 37 CFR 1.4(b) in the above-identified application. Therefore, the mere filing of a PCT application is not the notification required by 35 U.S.C. § 122(b)(2)(B)(iii) and 37 CFR 1.213(c). Petitioner's attention is also directed to 37 CFR 1.4(c), which states:

> Since different matters may be considered by different branches or sections of the United States Patent and Trademark Office, each distinct subject, inquiry or order must be contained in a separate paper to avoid confusion and delay in answering papers dealing with different subjects.

Pursuant to 37 CFR 1.4(c), the separate paper was required to address a distinct subject. Therefore, since a notification of foreign filing was required to be on a separate paper, the filing of the PCT application did not serve as the notification of foreign filing required by 35 U.S.C. § 122(b)(2)(B)(iii). It should be noted that the USPTO acts in a distinctly separate capacity, and in a dedicated, separate part of the Office, when it acts as a Receiving Office for the filing of applications and papers under the PCT. Accordingly, as a review of the contents of the file of the above-identified application shows that no notification of the November 2, 2001 filing of the PCT application was filed within 45 days after the filing date of the PCT application, applicants' failure to provide such timely notice of the filing of the PCT application, pursuant to 35 U.S.C. § 122(b)(2)(B)(iii) and 37 CFR 1.213(c), caused the above-identified application to become abandoned by operation of law at midnight December 17, 2001.

Requested Relief under 37 CFR 1.183

Alternatively, applicants request suspension of the rules under **37 CFR 1.183** if the Office finds that the filing of the PCT application does not satisfy the notification of foreign filing requirements of 35 U.S.C. § 122(b)(2)(B)(iii). In this regard, applicants contend that, despite the fact that the request to rescind the nonpublication request was mailed via certificate of mailing 15 days (i.e., on October 18, 2001 prior to the filing of the PCT application on November 2, 2001, the request to rescind was not processed and stamped by the USPTO until January 3, 2002, 77 days after the mailing of the request. With regard to the period during which the mails were delayed due to the anthrax discovery,

applicants make reference to a notice published in the Official Gazette with regard to the postal service delays caused by increased security procedures related to the discovery of anthrax in a Washington, D.C. mail facility and requests like relief with regard to the request to rescind the nonpublication request received on January 3, 2002 in the USPTO.

Decision on Petition under 37 CFR 1.183

As noted above, the request to rescind the nonpublication request was mailed via certificate of mailing under 37 CFR 1.8 on October 18, 2001, which was not received and stamped into the USPTO until January 3, 2002, due to mail delays. However, the relief provided for by the notice published in the Official Gazette of October 9, 2001, applies only to correspondence deposited by Express Mail under 37 CFR 1.10 and does not apply to mail deposited by first class mail under 37 CFR 1.8. In this regard, applicants' attention is directed to 1251 Official Gazette 55, which states:

> Parties submitting correspondence to the USPTO are reminded that 37 CFR 1.8 (certificate of mailing or transmission practice) does not provide for according a filing date as of the date of deposit with the USPS to correspondence submitted under 37 CFR 1.8. Therefore, it would be inappropriate to file a petition under 37 CFR 1.183 or 2.146(a)(5) and 2.148 to waive the requirements of 37 CFR 1.8.

In view of the above, applicants cannot rely on the notice published in the Official Gazette as a means for the requested relief under 37 CFR 1.183.

Moreover, the Notice published in the Official Gazette of July 1, 2003 (1272 Official Gazette 1), regarding the USPTO's clarification and interpretation of the provisions of 35 U.S.C. 122(b)(2)(B)(ii)-(iv), stated, in pertinent part under "In Summary:"

> (3) If an applicant makes a nonpublication request and subsequently files a counterpart application in an eighteen-month publication country before the nonpublication request is rescinded, 35 U.S.C. 122(b)(2)(B)(iii) requires the applicant to notify the USPTO of the foreign filing not later than forty-five days after the date such counterpart application was filed to avoid abandonment of the application.

(4) When an application is abandoned by operation of 35 U.S.C. 122(b)(2)(B)(iii) due to the failure to timely notify the USPTO of the filing of a counterpart application in an eighteen-month publication country, applicant's sole remedy to restore the application to pending status is by filing a petition under 37 CFR 1.137(b) to revive the abandoned application.
(5) Applicants should also provide a notice of foreign filing when rescinding a nonpublication request in anticipation of filing a counterpart application in an eighteen-month publication country because no benefit is given to a certificate of mailing or transmission under 37 CFR 1.8 on a rescission of a nonpublication request in determining whether applicant has rescinded the nonpublication request before or on the date a counterpart application is filed in an eighteen-month publication country.

Here, applicants' request to rescind the nonpublication request was mailed via certificate of mailing practice under 37 CFR 1.8, to which no benefit can be given. Further, since the request to rescind was not received in the USPTO until January 3, 2002, and the request did not provide any notice of foreign filing, compliance with 35 U.S.C. § 122(b)(2)(B)(iii) has not been satisfied. The Office has no authority pursuant to 37 CFR 1.183 to treat a rescission under 35 U.S.C. § 122(b)(2)(ii) as the notice of foreign filing required by 35 U.S.C. § 122(b)(2)(B)(iii). In addition, the Office has no authority to waive the 45 day period set forth in 35 U.S.C. § 122(b)(2)(B)(iii). As a result thereof, the application must be regarded as abandoned by operation of law. These are statutory requirements and a statutory requirement cannot be waived under the provisions of 37 CFR 1.183.

Moreover, as noted in item (4), applicants herein have a suitable remedy on hand that does not require the extraordinary remedy of invoking 37 CFR 1.183. It is brought to petitioner's attention that the USPTO will not normally consider an extraordinary remedy when the rules already provide an avenue for obtaining the relief sought. See Cantello v. Rasmussen, 220 USPQ 664 (Comm'r Pat. 1982). Furthermore, a standard principle of statutory construction is: *expressio unius est exclusion alterius* (the mention of one thing implies exclusion of another thing); namely, absent legislative intent to the contrary, when a statute expressly provides a specific remedy for a specific situation, the statute is deemed to exclude other remedies for such situation. See National R.R. Passenger Corp. v. National Ass'n Of R.R. Passengers, 414

U.S. 453, 458 (1974); see also Botany Worsted Mills v. United States, 278 U.S. 282, 289 (1929)("when a statute limits a thing to be done in a particular mode, it includes the negative of any other mode"). Since Congress has provided in Public Laws 97-247 and 106-103 specific schemes for the revival of abandoned applications (*i.e.*, the specific situations under which the PTO may revive an abandoned application and the specific requirements (fee amounts and standards) applicable to each specific situation), the creation of other schemes (e.g., the herein requested waiver of the rules under 37 CFR 1.183) for the revival of any abandoned application would be inconsistent with the patent statute. Thus, the Commissioner's authority to revive an abandoned application is limited to that specified in the statutory scheme set forth in 35 U.S.C. §§ 41(a)(7), 111, 122, 133, and 151. See Morganroth v. Quigg, 885 F.2d 843, 847, 12 USPQ2d 1125, 1128 (Fed. Cir. 1989)(the Commissioner lacks the authority to revive an application abandoned by termination of court proceedings because 35 U.S.C. §§ 41(a)(7), 133, or 151 do not provide for the revival of an application abandoned in such a manner).

PETITION UNDER 37 CFR 1.137(b)

Alternatively, applicants request revival of the instant application pursuant to the provisions of 37 CFR 1.137(b) for failure to timely notify the U.S. Patent and Trademark (USPTO) of the filing of an application in a foreign country, or under a multinational treaty that requires publication of applications eighteen months after filing. *See* 37 CFR 1.137(f).

Decision on Petition under 37 CFR 1.137(b)

As noted above, applicants stated in the petition that the instant nonprovisional application is the subject of a counterpart international application filed on November 2, 2001. However, the US Patent and Trademark Office was unintentionally not notified of this filing within 45 days subsequent to the filing of the international application.

In view of the above, this application became abandoned pursuant to 35 U.S.C. 122(b)(2)(B)(iii) and 37 CFR 1.213(c) for failure to timely notify the Office of the filing of an application in a foreign country, or under a multilateral international agreement, that requires publication of applications 18 months after filing.

A petition under 37 CFR 1.137(f) must be accompanied by:

(1) the reply, which is met by the notification of such filing in a foreign country or under a multinational treaty;
(2) the petition fee as set forth in 37 CFR 1.17(m); and
(3) a statement that the entire delay in filing the required reply from the due date of the reply until the filing of a grantable petition was unintentional.

The instant petition has been found to be in compliance with 37 CFR 1.137(f). Accordingly, the failure to timely notify the Office of a foreign or international filing within 45 days after the date of filing of such foreign or international application as provided by 35 U.S.C. § 122(b)(2)(B)(iii) and 37 CFR 1.213(c) is accepted as having been unintentionally delayed.

Telephone inquiries regarding this decision should be directed to Sherry Brinkley at (703) 305-9220.

This application is being forwarded to Technology Center 2100 for examination in due course.

Randy Green
Supervisory Petitions Examiner
Office of Petitions
Office of the Deputy Commissioner
for Patent Examination Policy

UNITED STATES PATENT AND TRADEMARK OFFICE

COMMISSIONER FOR PATENTS
UNITED STATES PATENT AND TRADEMARK OFFICE
P.O. BOX 1450
ALEXANDRIA, VA 22313-1450
www.uspto.gov

JJGJr: 05-03

Paper No: 8

ROTHWELL, FIGG,
ERNST & MANBECK, P.C.
1425 K STREET, N.W.
SUITE 800
WASHINGTON DC 20005

COPY MAILED
MAY 22 2003
OFFICE OF PETITIONS

In re Application of: :
Arita :
Filed: 1 June, 2001 :
Application No. 09/871,149 :
Docket No.: 82084-002 :

ON PETITION

This is a decision on the petitions filed herein on 2 May, 2003, under 37 C.F.R. §1.137(a)[1] to revive the above-identified application, and, in light of the allegations, considered as a request to withdraw the holding of abandonment under 37 C.F.R. §1.181.[2]

---

[1] A Petition filed under the provisions of 37 C.F.R. §1.137(a) must be accompanied by:
(1) The required reply, unless previously filed. In a nonprovisional application abandoned for failure to prosecute, the required reply may be met by the filing of a continuing application. In an application for patent, abandoned or lapsed for failure to pay the issue fee or any portion thereof, the required reply must be the payment of the issue fee or any outstanding balance thereof;
(2) the petition fee required by 37 C.F.R. §1.17(l);
(3) A showing to the satisfaction of the Commissioner that the entire delay in filing the required reply from the reply due date until the filing of a grantable petition pursuant to the is paragraph was unavoidable; and
(4) Any terminal disclaimer (and fee set forth in 37 C.F.R. §1.20(d)) required pursuant to 37 C.F.R. §1.137(c).

An application is "unavoidably" abandoned only where Petitioner (or Petitioner's counsel) takes all action necessary for a proper response to the outstanding Office action, but through the intervention of unforeseen circumstances, the response is not timely received in the Office. That is, in the context of ordinary human affairs the test is such care as is generally used and observed by prudent and careful persons in relation to their most important business. Ex parte Pratt, 1887 Dec. Comm'r Pat. 31 (Comm'r Pat. 1887); Ex parte Henrich, 1913 Dec. Comm'r Pat. 139, 141 (Comm'r. Pat. 1913).

[2] The regulations at 37 C.F.R. §1.181 provide, in pertinent part:
§1.181 Petition to the Commissioner.
(a) Petition may be taken to the Commissioner: (1) From any action or requirement of any examiner in the *ex parte* prosecution of an application which is not subject to appeal to the Board of Patent Appeals and Interferences or to the court; (2) In cases in which a statute or the rules specify that the matter is to be determined directly by or reviewed by the Commissioner; and (3) To invoke the supervisory authority of the Commissioner in appropriate circumstances. * * *
(b) Any such petition must contain a statement of the facts involved and the point or points to be reviewed and the action requested. Brief or memoranda, if any, in support thereof should accompany or be embodied in the petition; and where facts are to be proven, the proof in the form of affidavits or declaration (and exhibits, if any) must accompany the petition.
(c) When a petition is taken from an action or requirement of an examiner in the *ex parte* prosecution of an application, it may be required that there have been a proper request for reconsideration (§1.111) and a repeated action by the examiner. The examiner may be directed by the Commissioner to furnish a written statement, within a specified time, setting forth the reasons for his decision upon the matters averred in the petition, supplying a copy thereof to the petitioner.
(d) Where a fee is required for a petition to the Commissioner the appropriate section of this part will so indicate. If any required fee does not accompany the petition, the petition will be dismissed. * * *

For the reasons set forth below, the petition under 37 C.F.R.:

- §1.137(a) is **DISMISSED**; and
- §1.181 is **DISMISSED**.

NOTES:

(1) Any petition (and fee) for reconsideration of this decision under 37 C.F.R. §1.137(a) (as to unavoidable delay) or an alternative request for relief under 37 C.F.R. §1.137(b)[3] (as to unintentional delay) must be submitted within two (2) months from the mail date of this decision. Extensions of time under 37 C.F.R. §1.136(a) are permitted. The reconsideration request should include a cover letter entitled "Renewed Petition under 37 C.F.R. §1.137(a)"; and/or "Petition under 37 C.F.R. §1.137(b)";

(2) Thereafter, there will be no further reconsideration of this matter.

BACKGROUND

The record indicates that:

- Petitioner Stephen B. Parker (Reg. No. 36,631) (Petitioner) failed to reply timely and properly to the Notice to File Missing Parts (fees and oath/declaration with surcharge) mailed by the Office to Petitioner's former office Hogan and Hartson (Hogan) on 31 July, 2001, with reply due (absent extension of time) on or before Monday 1 October, 2001;

(f) Except as otherwise provided in these rules, any such petition not filed within 2 months from the action complained of, may be dismissed as untimely. The mere filing of a petition will not stay the period for reply to an Examiner's action which may be running against an application, nor act as a stay of other proceedings. * * * (Emphasis supplied.)

[3] Effective December 1, 1997, the provisions of 37 C.F.R. §1.137(b) now provide that where the delay in reply was unintentional, a petition may be filed to revive an abandoned application or a lapsed patent pursuant to 37 C.F.R. §1.137(b). a grantable petition filed under the provisions of 37 C.F.R. §1.137(b) must be accompanied by:
(1) the required reply, unless previously filed. In a nonprovisional application abandoned for failure to prosecute, the required reply may be met by the filing of a continuing application. In an application or patent, abandoned or lapsed for failure to pay the issue fee or any portion thereof, the required reply must be the payment of the issue fee or any outstanding balance thereof.
(2) the petition fee as set forth in 37 C.F.R. §1.17(m);
(3) a statement that the entire delay in filing the required reply from the due date for the reply until the filing of a grantable petition pursuant to 37 C.F.R. §1.137(b) was unintentional. The Commissioner may require additional information where there is a question whether the delay was unintentional; and
(4) any terminal disclaimer (and fee set forth in 37 C.F.R. §1.20(d)) required pursuant to 37 C.F.R. §1.137(c). (Emphasis supplied.)

- the application was deemed abandoned after midnight 1 October, 2001;

- Petitioner filed a Notice of Change of Correspondence address (from Hogan to Rothwell, Figg Ernst & Manbeck (Rothwell)) on 5 December 2002, and the Office acknowledged that filing on 10 March, 2003;

- Notice of Abandonment was mailed on 14 April, 2003;

- Petitioner:

  --states that "[Hogan] is a large firm with multiple thousands of employees and more than 18 offices world wide";

  --indicates that no Notice was received at the Hogan firm and, while, "there is some likelihood that this Notice was inadvertently not mailed by the Patent Office . . . [t]here is also some likelihood that this Notice was inadvertently mis-handled by the [Hogan] mail center and not properly routed to the docketing department";

  --supplies a one- (1-) page docketing sheet from Hogan evidencing no listing of the Notice to File Missing Parts;

  --acknowledges that "[Hogan's] mail room processes a large volume of mail that may, in some instances, be mishandled";

  --contrasts the Hogan system with those at Rothwell, which has "many years of operation as a strong mid-sized Patent Boutique";

  --claims that, "[n]otably, in a recent Patent Office Business Method Partnership Meeting held at the Patent Office, the Patent Office indicated that the first Office Actions are usually not received for **well over two years** in this class . . . [and] . . . [r]ecently, the Patent Office even confirmed that this is now often **well over three years** until the first Office Action in this class" (emphasis, the original); and

- notably:

  --in the nearly two years of pendency between filing of the application and the filing of the instant petition, Petitioner has filed not one Status Inquiry in this matter; and

  --with the instant petition Petitioner failed to file a reply to the Notice of Missing Parts (filing fees, oath/declaration and surcharge)--Petitioner is cautioned that there have been changes in fee structure since the mailing of the Notice, and the

fees quoted in that 2001 Notice are not the current fees, which schedule may be found at the Office website: www.uspto.gov).

STATUTES, REGULATIONS AND ANALYSIS

Congress has authorized the Commissioner to "revive an application if the delay is shown to the satisfaction of the Commissioner to have been "unavoidable." 35 U.S.C. §133 (1994).[4]

The regulations at 37 C.F.R. §1.137(a) and (b) set forth the requirements for a petitioner to revive a previously unavoidably or unintentionally, respectively, abandoned application under this congressional grant of authority.

The language of 35 U.S.C. §133 and 37 C.F.R. §1.137(a) is clear, unambiguous, and without qualification: the delay in tendering the reply to the outstanding Office action, as well as filing the first petition seeking revival, must have been unavoidable for the reply now to be accepted on petition.[5]

Delays in responding properly raise the question whether delays are unavoidable.[6] Where there is a question whether the delay was unavoidable, Petitioners must meet the burden of establishing that the delay was unavoidable within the meaning of 35 U.S.C. §133 and 37 C.F.R. §1.137(a).[7]

And the Petitioner must be diligent in attending to the matter.[8] Failure to do so does not constitute the care required under Pratt, and so cannot satisfy the test for diligence and due care.

(By contrast, unintentional delays are those that do not satisfy the very strict statutory and

---

[4] 35 U.S.C. §133 provides:
35 U.S.C. §133 Time for prosecuting application.
Upon failure of the applicant to prosecute the application within six months after any action therein, of which notice has been given or mailed to the applicant, or within such shorter time, not less than thirty days, as fixed by the Commissioner in such action, the application shall be regarded as abandoned by the parties thereto, unless it be shown to the satisfaction of the Commissioner that such delay was unavoidable.

[5] Therefore, by example, an unavoidable delay in the payment of the Filing Fee might occur if a reply is shipped by the US Postal Service, but due to catastrophic accident, the delivery is not made.

[6] See: *Changes to Patent Practice and Procedure*; *Final Rule Notice*, 62 *Fed. Reg.* at 53158-59 (October 10, 1997), 1203 *Off. Gaz. Pat. Office* at 86-87 (October 21, 1997).

[7] See: In re Application of G, 11 USPQ2d 1378, 1380 (Comm'r Pats. 1989).

[8] See: Diligence in Filing Petitions to Revive and Petitions to Withdraw the Holding of Abandonment, 1124 Off. Gaz. Pat. Office 33 (March 19, 1991). It was and is Petitioner's burden to exercise diligence in seeking either to have the holding of abandonment withdrawn or the application revived. See 1124 Off. Gaz. Pat. Office supra.

regulatory requirements of unavoidable delay, and also, by definition, are not intentional.[9])

Allegations as to the Request to Withdraw
the Holding of Abandonment

The courts have determined the construct for properly supporting a petition seeking withdrawal of a holding of abandonment.[10]

Petitioner makes no showing that the Office caused the delay which triggered abandonment of the instant application. Therefore, withdrawal of the holding of abandonment is wholly inappropriate.

Allegations as to Unavoidable Delay

In determining if a delay was unavoidable, decisions on reviving abandoned applications have adopted the standard of the reasonably prudent person acting in their most important business matters.[11] In addition, decisions on revival are made on a "case-by-case basis, taking all the facts and circumstances into account."[12]

Petitioner acknowledges that the delay might have resulted in the mis-handling of the Notice by his former office and he cannot demonstrate (or at least fails to do so) error on the part of the Office. Such performance does not rise to the Pratt standard.

Petitioner also alludes to statements allegedly made by the Office. Petitioner is reminded that practice before the Office is not an oral process. (See: 37 C.F.R. §1.2[13]) Moreover, diligent practice would prompt one to inquire when one claims to have received no reply from the Office in nearly two (2) years--for example, a Status Inquiry at six- (6-) month intervals would be a prudent practice by which one might demonstrate diligence as foreseen in the Pratt standard.

---

[9] Therefore, by example, an unintentional delay in the reply might occur if the reply and transmittal form are to be prepared for shipment by the US Postal Service, but other pressing matters distract one's attention and the mail is not timely deposited for shipment.

[10] See: Delgar v. Schulyer, 172 USPQ 513 (D.D.C. 1971).

[11] Ex parte Pratt, 1887 Dec. Comm'r Pat. 31, 32-33 (Comm'r Pat. 1887) (the term "unavoidable" "is applicable to ordinary human affairs, and requires no more or greater care or diligence than is generally used and observed by prudent and careful men in relation to their most important business"); In re Mattullath, 38 App. D.C. 497, 514-15 (D.C. Cir. 1912); Ex parte Henrich, 1913 Dec. Comm'r Pat. 139, 141 (Comm'r Pat. 1913).

[12] Smith v. Mossinghoff, 671 F.2d 533, 538, 213 USPQ 977, 982 (D.C. Cir. 1982).

[13] The regulations at 37 C.F.R. §1.2 provide:
§1.2 Business to be transacted in writing.
All business with the Patent and Trademark Office should be transacted in writing.The personal attendance of applicants or their attorneys or agents at the Patent and Trademark Office is unnecessary. The action of the Patent and Trademark Office will be based exclusively on the written record in the Office. No attention will be paid to any alleged oral promise, stipulation,or understanding in relation to which there is disagreement or doubt.

Three periods to be considered during the evaluation of a petition under 37 C.F.R. §1.137 are the delay in:

(1) reply that originally resulted in abandonment and from the abandonment until discovery thereof;

(2) filing an initial petition pursuant to §1.137 to revive the application; and

(3) filing a *grantable* petition[14] pursuant to §1.137 to revive the application.[15]

This petition fails to make the required showing as to all three periods that the delay was unintentional within the meaning of 35 U.S.C. §§133 and 41(a)(7) and 37 C.F.R. §1.137.

Petitioner must satisfactorily address this issue in any request for reconsideration.

Petitioner's most limited submission of documentation in satisfaction of a showing as required under 37 C.F.R. §1.137:

- but a single docket sheet for the application, with no mail logs or docket report for the due date of the reply evidencing that a transaction that should have been docketed wasn't; and
- not a copy of correspondence, memoranda, personal calendars or desk journals.

Accordingly, in view of the failure of the "showing" requirement to be met herein, the petition to revive as to unavoidable delay under 37 C.F.R. §1.137(a) cannot be granted.

CONCLUSION

Because Petitioner failed to satisfy the burdens set forth in Delgar v. Schulyer, the petition under 37 C.F.R. §1.181 must be and hereby is **dismissed**.

Moreover, because Petitioner failed to satisfy the to the Pratt standard, the petition herein 37 C.F.R. §1.137(a) must be **dismissed**.

---

[14] Because the 2 May, 2002, was and is not grantable, this period continues to run until such time as a grantable petition is filed.

[15] *See: Changes to Patent Practice and Procedure; Final Rule Notice*, 62 *Fed. Reg.* 53131 at 53158 (10 October, 1997).

ALTERNATIVE VENUE

If Petitioner is unable to make a showing of unavoidable delay surpassing that tendered heretofore, Petitioner's only alternative to irretrievable abandonment is to file a petition and fee as set forth at NOTE 1, above at pages 1 and 2, under 37 C.F.R. §1.137(b), and state therein that "the entire delay in filing the required reply from the due date for the reply until the filing of a grantable petition pursuant to 37 C.F.R. §1.137(b) was unintentional.".

Thus, Petitioner may wish to supplement his petition to plead alternatively under 37 C.F.R. §1.137(b) wherein the "showing " burden is much less onerous.

Petitioner is cautioned that failure to submit such a petition 37 C.F.R. §1.137(b) timely may be viewed as intentional delay and an absolute bar to revival.

Further correspondence with respect to this matter should be addressed as follows:

By mail: (Effective 1 May, 2003)[16]
Commissioner for Patents
P.O. Box 1450
Alexandria, VA 22313-1450

By FAX: (703) 308-6916
ATTN.: Office of Petitions

By hand: Crystal Plaza Four, Suite CP4-3C23
2201 South Clark Place
Arlington, VA 22202

Telephone inquiries concerning this decision may be directed to the undersigned at (703) 305-9199.

John J. Gillon, Jr.
Senior Attorney
Office of Petitions

[16] To determine the appropriate addresses for other subject-specific correspondence, refer to the USPTO Web site at www.uspto.gov.

UNITED STATES PATENT AND TRADEMARK OFFICE

COMMISSIONER FOR PATENTS
UNITED STATES PATENT AND TRADEMARK OFFICE
P.O. BOX 1450
ALEXANDRIA, VA 22313-1450
www.uspto.gov

JJGJr: 06-03

Paper No: 11

ROTHWELL, FIGG,
ERNST & MANBECK, P.C.
1425 K STREET, N.W.
SUITE 800
WASHINGTON DC 20005

COPY MAILED
JUN 27 2003
OFFICE OF PETITIONS

In re Application of:	:	ON PETITION
Arita	:	
Filed: 1 June, 2001	:	
Application No. 09/871,149	:	
Docket No.: 82084-002	:	

This is a decision on the petition filed herein on 6 June, 2003, under 37 C.F.R. §1.137(b)[1] to revive the above-identified application.

For the reasons set forth below, the petition under 37 C.F.R. §1.137(b) is **GRANTED**.

BACKGROUND

The record indicates that:

- Petitioner Stephen B. Parker (Reg. No. 36,631) (Petitioner) failed to reply timely and properly to the Notice to File Missing Parts (fees and oath/declaration with surcharge) mailed by the Office to Petitioner's former office Hogan and Hartson (Hogan) on 31 July, 2001, with reply due (absent extension of time) on or before Monday 1 October, 2001;

- the application was deemed abandoned after midnight 1 October, 2001;

---

[1] Effective December 1, 1997, the provisions of 37 C.F.R. §1.137(b) now provide that where the delay in reply was unintentional, a petition may be filed to revive an abandoned application or a lapsed patent pursuant to 37 C.F.R. §1.137(b). a grantable petition filed under the provisions of 37 C.F.R. §1.137(b) must be accompanied by:
(1) the required reply, unless previously filed. In a nonprovisional application abandoned for failure to prosecute, the required reply may be met by the filing of a continuing application. In an application or patent, abandoned or lapsed for failure to pay the issue fee or any portion thereof, the required reply must be the payment of the issue fee or any outstanding balance thereof.
(2) the petition fee as set forth in 37 C.F.R. §1.17(m);
(3) a statement that the entire delay in filing the required reply from the due date for the reply until the filing of a grantable petition pursuant to 37 C.F.R. §1.137(b) was unintentional. The Commissioner may require additional information where there is a question whether the delay was unintentional; and
(4) any terminal disclaimer (and fee set forth in 37 C.F.R. §1.20(d)) required pursuant to 37 C.F.R. §1.137(c). (Emphasis supplied.)

- Petitioner filed a Notice of Change of Correspondence address (from Hogan to Rothwell, Figg Ernst & Manbeck (Rothwell)) on 5 December 2002, and the Office acknowledged that filing on 10 March, 2003;
- Notice of Abandonment was mailed on 14 April, 2003;
- in the original petition filed on 2 May, 2003, under 37 C.F.R. §1.137(a) (and, in light of allegations of non-receipt considered under 37 C.F.R. §1.181) Petitioner failed to support those allegations and the petitions were dismissed on 22 May, 2003;
- with the instant petition (with fee) Petitioner makes the statement of unintentional delay; and
- the reply to the Notice of Missing Parts has been filed, thus satisfying the "reply" requirement under the regulation.

STATUTES, REGULATIONS AND ANALYSIS

Congress has authorized the Commissioner to "revive an application if the delay is shown to the satisfaction of the Commissioner to have been "unavoidable." 35 U.S.C. §133 (1994).[2]

The regulations at 37 C.F.R. §1.137(a) and (b) set forth the requirements for a petitioner to revive a previously unavoidably or unintentionally, respectively, abandoned application under this congressional grant of authority.

The language of 35 U.S.C. §133 and 37 C.F.R. §1.137(a) is clear, unambiguous, and without qualification: the delay in tendering the reply to the outstanding Office action, as well as filing the first petition seeking revival, must have been unavoidable for the reply now to be accepted on petition.[3]

---

[2] 35 U.S.C. §133 provides:
35 U.S.C. §133 Time for prosecuting application.
Upon failure of the applicant to prosecute the application within six months after any action therein, of which notice has been given or mailed to the applicant, or within such shorter time, not less than thirty days, as fixed by the Commissioner in such action, the application shall be regarded as abandoned by the parties thereto, unless it be shown to the satisfaction of the Commissioner that such delay was unavoidable.

[3] Therefore, by example, an unavoidable delay in the payment of the Filing Fee might occur if a reply is shipped by the US Postal Service, but due to catastrophic accident, the delivery is not made.

Delays in responding properly raise the question whether delays are unavoidable.[4] Where there is a question whether the delay was unavoidable, Petitioners must meet the burden of establishing that the delay was unavoidable within the meaning of 35 U.S.C. §133 and 37 C.F.R. §1.137(a).[5]

And the Petitioner must be diligent in attending to the matter.[6] Failure to do so does not constitute the care required under Pratt, and so cannot satisfy the test for diligence and due care.

(By contrast, unintentional delays are those that do not satisfy the very strict statutory and regulatory requirements of unavoidable delay, and also, by definition, are not intentional.[7])

As to Unintentional Delay

Petitioner has authorized the fee, made the statement of unintentional delay, and submitted authorization for the required reply(ies).

CONCLUSION

Accordingly, the petition to revive under 37 C.F.R. §1.137(b) hereby is **granted**.

The instant application is being forwarded to Technology Center 3600 for further processing in due course.

Telephone inquiries concerning this decision may be directed to the undersigned at (703) 305-9199.

John J. Gillon, Jr.
Senior Attorney
Office of Petitions

---

[4] See: *Changes to Patent Practice and Procedure; Final Rule Notice*, 62 *Fed. Reg.* at 53158-59 (October 10, 1997), 1203 *Off. Gaz. Pat. Office* at 86-87 (October 21, 1997).

[5] See: In re Application of G, 11 USPQ2d 1378, 1380 (Comm'r Pats. 1989).

[6] See: Diligence in Filing Petitions to Revive and Petitions to Withdraw the Holding of Abandonment, 1124 Off. Gaz. Pat. Office 33 (March 19, 1991). It was and is Petitioner's burden to exercise diligence in seeking either to have the holding of abandonment withdrawn or the application revived. See 1124 Off. Gaz. Pat. Office supra.

[7] Therefore, by example, an unintentional delay in the reply might occur if the reply and transmittal form are to be prepared for shipment by the US Postal Service, but other pressing matters distract one's attention and the mail is not timely deposited for shipment.

UNITED STATES PATENT AND TRADEMARK OFFICE

Commissioner for Patents
United States Patent and Trademark Office
P.O. Box 1450
Alexandria, VA 22313-1450
www.uspto.gov

HAMILTON, BROOK, SMITH & REYNOLDS, P.C.
530 VIRGINIA ROAD
P.O. BOX 9133
CONCORD MA 01742-9133

COPY MAILED

JAN 16 2007

OFFICE OF PETITIONS

In re Application of	:	
HELLER, et al.	:	
Application No. 09/871,154	:	DECISION ON PETITION
Filed: May 31, 2001	:	TO WITHDRAW
Attorney Docket No. 2479.2091-000.	:	FROM RECORD
	:	

This is a decision on the Request to Withdraw as attorney or agent of record under 37 C.F.R. § 1.36(b), filed November 22, 2006.

The request is **NOT APPROVED**.

A grantable request to withdraw as attorney/agent of record must be signed by every attorney/agent seeking to withdraw or contain a clear indication that one attorney is signing on behalf of another/others. A request to withdraw will not be approved unless at least 30 (thirty) days would remain between the date of approval and the later of the expiration date of a time to file a response or the expiration date of the maximum time period which can be extended under 37 C.F.R. § 1.136(a).

The Office cannot approve the request at this time since the reasons provided do not meet any of the conditions under the mandatory or permissive categories enumerated in 37 CFR 10.40. Section 10.40 of Title 37 of the Code of Federal Regulation states, "[a] practitioner shall not withdraw from employment in a proceeding before the Office without permission from the Office[.]" More specifically, 37 CFR 10.40 states, "[i]f paragraph (b) of this section is not applicable, a practitioner may not request permission to withdraw in matter pending before the Office unless such request or such withdrawal is" for one the permissive reasons listed in 37 CFR 10.40(c). The reasons set forth in the request, "assignee discharged the firm and requested transfer of file", does not meet any of the conditions set forth in 37 CFR 10.40.

In order to request or take action in a patent matter, the assignee must establish its ownership of the patent to the satisfaction of the Director. In this regard, a Statement under 37 CFR 3.73(b) must have either: (i) documentary evidence of a chain of title from the original owner to the assignee (*e.g.*, copy of an executed assignment), and a statement affirming that the documentary evidence of the chain of title from the original owner to the assignee was or concurrently is being

submitted for recordation pursuant to § 3.11; or (ii) a statement specifying where documentary evidence of a chain of title from the original owner to the assignee is recorded in the assignment records of the Office (*e.g.*, reel and frame number).

All future communications from the Office will continue to be directed to the above-listed address until otherwise notified by applicant.

Telephone inquiries concerning this decision should be directed to the undersigned at 571-272-7253.

Monica A. Graves
Petitions Examiner
Office of Petitions

cc: **VOLPE AND KOEING PC**
30 SOUTH 17TH STREET, SUITE 1600
UNITED PLAZA
PHILADELPHIA, PA 19103

UNITED STATES PATENT AND TRADEMARK OFFICE

Commissioner for Patents
United States Patent and Trademark Office
P.O. Box 1450
Alexandria, VA 22313-1450
www.uspto.gov

HAMILTON, BROOK, SMITH & REYNOLDS, P.C.
530 VIRGINIA ROAD
P.O. BOX 9133
CONCORD MA 01742-9133

COPY MAILED

AUG 0 2 2007

OFFICE OF PETITIONS

In re Application of	:	
HELLER, et al.	:	
Application No. 09/871,154	:	DECISION ON PETITION
Filed: May 31, 2001	:	TO WITHDRAW
Attorney Docket No. 2479.2091-000	:	FROM RECORD
	:	

This is a decision on the renewed Request to Withdraw as attorney or agent of record under 37 C.F.R. § 1.36(b), filed February 9, 2007.

The request is **NOT APPROVED** as moot.

A review of the file record indicates that the power of attorney to HAMILTON BROOK SMITH & REYNOLDS PC has been revoked by the assignee of the patent application on March 16, 2007. Accordingly, the request to withdraw under 37 C.F.R. § 1.36(b) is moot.

All future communications from the Office will continue to be directed to the below-listed address until otherwise notified by applicant.

Telephone inquires concerning this decision should be directed to the undersigned at 571-272-7253.

Monica A. Graves
Petitions Examiner
Office of Petitions

cc: **VOLPE AND KOENIG PC**
30 S. 17TH STREET, SUITE 1600
UNITED PLAZA
PHILADELPHIA, PA 19103

UNITED STATES PATENT AND TRADEMARK OFFICE

Commissioner for Patents
United States Patent and Trademark Office
P.O. Box 1450
Alexandria, VA 22313-1450
www.uspto.gov

PHILIPS ELECTRONICS NORTH AMERICA CORPORATION
INTELLECTUAL PROPERTY & STANDARDS
1109 MCKAY DRIVE, M/S-41SJ
SAN JOSE, CA 95131

COPY MAILED

SEP 2 0 2005

OFFICE OF PETITIONS

In re Application of	:	
Santanu Dutta, et al.	:	
Application No. 09/871,198	:	ON PETITION
Filed: May 31, 2001	:	
Attorney Docket No. US 018080	:	

This is a decision on the petition under 37 CFR 1.137(b), filed March 11, 2005, to revive the above-identified application.

The petition is **DISMISSED AS MOOT.**

A corrected Notice of Allowance was mailed on May 20, 2005. In view of the records, petitioner's response was timely filed. Accordingly, the present petition to revive is unnecessary and dismissed as moot. No petition fee was charged to petitioner's deposit account.

Telephone inquiries concerning this decision should be directed to the undersigned at (571) 272-3229.

This application matter is being forwarded to the Publishing Division for further processing.

Retta Williams

Retta Williams
Petitions Examiner
Office of Petitions
Office of the Deputy Commissioner
for Patent Examination Policy

UNITED STATES PATENT AND TRADEMARK OFFICE

UNITED STATES DEPARTMENT OF COMMERCE
United States Patent and Trademark Office
Address: COMMISSIONER FOR PATENTS
P.O. Box 1450
Alexandria, Virginia 22313-1450
www.uspto.gov

KENYON & KENYON LLP
ONE BROADWAY
NEW YORK, NY 10004

Mail Date: 04/21/2010

Applicant	: Marcel F.C. Schemmann	: DECISION ON REQUEST FOR
Patent Number	: 7599627	: RECALCULATION of PATENT
Issue Date	: 10/06/2009	: TERM ADJUSTMENT IN VIEW
Appliction No	: 09/871,216	: OF WYETH AND NOTICE OF INTENT TO
Filed	: 05/31/2001	: ISSUE CERTIFICATE OF CORRECTION
		:

The Request for Recalculation is **GRANTED** to the extent indicated.

The patent term adjustment has been determined to be **875** days. The USPTO will *sua sponte* issue a certificate of correction reflecting the amount of PTA days determined by the recalculation.

Prior to the issuance of the certificate of correction, the USPTO will afford patentee an opportunity to be heard and request reconsideration. Accordingly, patentee has **one month or thirty (30) days**, whichever is longer, to file a request for reconsideration of this patent term adjustment calculation. See 35 U.S.C. 154(b)(3)(B)(ii) and 37 CFR 1.322(a)(4). No extensions of time will be granted under 37 CFR 1.136.

Patentee should use document code PET.OP if electronically filing a request for reconsideration of this patent term adjustment calculation. The patentee must also include the information required by 37 CFR 1.705(b)(2) and the fee required by 37 CFR 1.18(e). If patentee does not file a timely request for reconsideration of this patent term adjustment calculation including the information required by 37 CFR 1.705(b)(2) and the fee required by 37 CFR 1.18(e), the USPTO will issue a certificate of correction reflecting the PTA determination noted above.

Patentee should be aware that in order to preserve the right to review in the United States District Court for the District of Columbia of the USPTO patent term adjustment determination, patentee must ensure that he or she also take the steps required under 35 U.S.C. 154(b)(4)(A) in a timely manner. Nothing in the request for recalculation should be construed as providing an alternative time frame for commencing a civil action under 35 U.S.C. 154(b)(4)(A).

Any questions concerning this decision should be directed to the Office of Patent Legal Administration at 571-272-7702.

UNITED STATES PATENT AND TRADEMARK OFFICE

COMMISSIONER FOR PATENTS
UNITED STATES PATENT AND TRADEMARK OFFICE
P.O. BOX 1450
ALEXANDRIA, VA 22313-1450
www.uspto.gov

APR 14 2004

Paper No. 13

In re Application of
Bruce L Hawkins
Application No. 09/871,271
Filed: May 31, 2001
Attorney Docket No. 08002.00011

DECISION ON PETITION

This is a decision on the petition filed on April 6, 2004 by which petitioner requests withdrawal of the examiner's holding that this application stands abandoned for failure to file a proper and timely reply to the Office action dated June 5, 2002. The petition is considered pursuant to 37 CFR 1.181, and no fee is required.

The petition is denied.

Petitioner alleges that a reply to the Office letter in question was filed on September 12, 2002, but that the "original invitation to pay for a one month extension" was mailed from the Office on December 17, 2002, nearly twelve weeks after the Office letter in question was received by counsel's offices, and that counsel's offices were closed from December 15, 2002 until January 2, 2003. Petitioner further alleges that had the "invitation" to pay for a one-month extension been timely received, petitioner would have responded to it. Petitioner notes that the one-month extension fee was paid on January 3, 2003, and that petitioner had done all that could be done to maintain the application in pending status.

35 USC § 133 reads as follows:

Time for prosecuting application.
Upon failure of the applicant to prosecute the application within six months after any action therein, of which notice has been given or mailed to the applicant, or within such shorter time, not less than thirty days, as fixed by the Director in such action, the application shall be regarded as abandoned by the parties thereto, unless it be shown to the satisfaction of the Director that such delay was unavoidable.

37 CFR 1.136 reads, in pertinent part, as follows:

1.136 Extensions of time.
(a)(1) If an applicant is required to reply within a nonstatutory or shortened statutory time period, applicant may extend the time period for reply up to the earlier of the expiration of any maximum period set by statute or five months after the time period set for reply, if a petition for an extension of time and the fee set in § 1.17(a) are filed, unless:
(i) Applicant is notified otherwise in an Office action;
(ii) The reply is a reply brief submitted pursuant to § 1.193(b);
(iii) The reply is a request for an oral hearing submitted pursuant to § 1.194(b);
(iv) The reply is to a decision by the Board of Patent Appeals and Interferences pursuant to § 1.196, § 1.197 or § 1.304; or
(v) The application is involved in an interference declared pursuant to § 1.611.

(2) The date on which the petition and the fee have been filed is the date for purposes of determining the period of extension and the corresponding amount of the fee. The expiration of the time period is determined by the amount of the fee paid. A reply must be filed prior to the expiration of the period of extension to avoid abandonment of the application (§ 1.135), but in no situation may an applicant reply later than the maximum time period set by statute, or be granted an extension of time under paragraph (b) of this section when the provisions of this paragraph are available. See § 1.136(b) for extensions of time relating to proceedings pursuant to §§ 1.193(b), 1.194, 1.196 or 1.197; § 1.304 for extensions of time to appeal to the U.S. Court of Appeals for the Federal Circuit or to commence a civil action; § 1.550(c) for extensions of time in ex parte reexamination proceedings, § 1.956 for extensions of time in inter partes reexamination proceedings; and § 1.645 for extensions of time in interference proceedings.

In MPEP § 710.02(b), it is stated that the time for filing a reply to any Office action on the merits is to be set at three months from the date of mailing the Office action.

MPEP § 711.03(c) reads, in pertinent part:

> Evidence of nonreceipt of an Office communication or action (e.g. Notice of Abandonment or an advisory action) other than that action to which reply was required to avoid abandonment would not warrant withdrawal of the holding of abandonment. Abandonment takes place by operation of law for failure to reply to an Office action or timely pay the issue fee, not by operation of the mailing of a Notice of Abandonment. (Citations omitted.)

The record shows that an Office action setting a three month shortened statutory period was mailed to the correspondence address of record on June 5, 2002. Therefore, a reply to this Office letter was due on or before September 5, 2002, a Thursday and a regular business day within the District of Columbia (see 37 CFR 1.5). This Office letter was clearly received at the correspondence address of record because the record shows that on September 12, 2002, a response thereto was filed by petitioner. The response has affixed thereto a 37 CFR 1.8(a) certificate of mailing, and the certificate is dated September 6, 2002. The response was, therefore, not timely filed. Under 35 USC § 133 and 37 CFR 1.136(a), petitioner was required to obtain an appropriate extension of time in order to render the otherwise untimely filing timely. Petitioner did not obtain the necessary extension of time. As indicated in MPEP § 711.03(c), the failure to receive (timely or otherwise) an Office communication other than that action to which reply was required to avoid abandonment (in this case a letter informing petitioner that the reply filed on September 12, 2002 was late and that an extension of time would be required) does not operate to avoid abandonment by operation of 35 USC § 133 or warrant withdrawal of the holding of abandonment. The fact that petitioner was not appraised of the necessity of obtaining an extension of time until after the maximum statutory period of six months permitted by 35 USC § 133 had expired does not operate to avoid the abandonment or to warrant withdrawal of the proper holding that the application in fact stands abandoned.

For the foregoing reasons, none of the allegations contained in the petition are persuasive that the holding of abandonment was improper. Therefore, there is no basis upon which to withdraw the holding of abandonment. While petitioner is entitled to request reconsideration of this decision, without fee, provided that the request is timely filed in accordance with 37 CFR 1.181(f), it would appear that petitioner's remedy is to proceed pursuant to 37 CFR 1.137.

The application is being returned to storage as an abandoned file.

PETITION DENIED.

E. Rollins-Cross, Director
Technology Center 3700

Steven Thrasher
391 Sandhill Drive
Richardson, TX 75080

UNITED STATES PATENT AND TRADEMARK OFFICE

Commissioner for Patents
United States Patent and Trademark Office
P.O. Box 1450
Alexandria, VA 22313-1450
www.uspto.gov

Paper No. 15

STEVEN THRASHER
391 SANDHILL DR.
RICHARDSON, TX 75080

COPY MAILED

JUL 2 9 2004

OFFICE OF PETITIONS

In re Application of
Bruce L. Hawkins
Application No. 09/871,271
Filed: May 31, 2001
Attorney Docket No. 00001

ON PETITION

This is a decision on the petition under 37 CFR 1.137(b), filed July 8, 2004, to revive the above-identified application.

The petition is **GRANTED**.

The above-identified application became abandoned for failure to reply in a timely manner to the non-final Office action mailed June 5, 2002, which set a shortened statutory period for reply of three (3) months. No extensions of time under the provisions of 37 CFR 1.136(a) were obtained. Accordingly, the above-identified application became abandoned on August 6, 2002.

37 CFR 1.137(b)(3) requires a statement that the entire delay in filing the required reply from the due date for the reply until the filing of a grantable petition pursuant to 37 CFR 1.137(b) was unintentional. If the statement contained in the instant petition varies from the language required by 37 CFR 1.137(b)(3), the statement contained in the instant petition is being construed as the statement required by 37 CFR 1.137(b)(3) and petitioner must notify the Office if this is **not** a correct interpretation of the statement contained in the instant petition.

An extension of time under 37 CFR 1.136 must be filed prior to the expiration of the maximum extendable period for reply. See In re Application of S., 8 USPQ2d 1630, 1631 (Comm'r Pats. 1988). Accordingly, since the $55.00 extension of time submitted on January 9, 2003 was subsequent to the maximum extendable period for reply, petitioner may request a refund of this fee by writing to: Mail Stop 16, Director of the United States Patent and Trademark Office, P.O. Box 1450, Alexandria, VA 22313-1450. A copy of this decision should accompany petitioner's request.

Telephone inquiries concerning this decision should be directed to Wan Laymon at (703) 306-5685.

The application file is being forwarded to Technology Center AU 3723.

Wan Laymon
Petitions Examiner
Office of Petitions
Office of the Deputy Commissioner
for Patent Examination Policy

UNITED STATES PATENT AND TRADEMARK OFFICE

UNITED STATES DEPARTMENT OF COMMERCE
United States Patent and Trademark Office
Address: COMMISSIONER FOR PATENTS
P.O. Box 1450
Alexandria, Virginia 22313-1450
www.uspto.gov

PEARNE & GORDON LLP
1801 EAST 9TH STREET
SUITE 1200
CLEVELAND, OH 44114-3108

Mail Date: 04/21/2010

Applicant	: Eugene C. Nelson	: DECISION ON REQUEST FOR
Patent Number	: 7606726	: RECALCULATION of PATENT
Issue Date	: 10/20/2009	: TERM ADJUSTMENT IN VIEW
Appliction No	: 09/871,279	: OF WYETH AND NOTICE OF INTENT TO
Filed	: 05/31/2001	: ISSUE CERTIFICATE OF CORRECTION
		:

The Request for Recalculation is **GRANTED** to the extent indicated.

The patent term adjustment has been determined to be **1280** days. The USPTO will *sua sponte* issue a certificate of correction reflecting the amount of PTA days determined by the recalculation.

Prior to the issuance of the certificate of correction, the USPTO will afford patentee an opportunity to be heard and request reconsideration. Accordingly, patentee has **one month or thirty (30) days**, whichever is longer, to file a request for reconsideration of this patent term adjustment calculation. See 35 U.S.C. 154(b)(3)(B)(ii) and 37 CFR 1.322(a)(4). No extensions of time will be granted under 37 CFR 1.136.

Patentee should use document code PET.OP if electronically filing a request for reconsideration of this patent term adjustment calculation. The patentee must also include the information required by 37 CFR 1.705(b)(2) and the fee required by 37 CFR 1.18(e). If patentee does not file a timely request for reconsideration of this patent term adjustment calculation including the information required by 37 CFR 1.705(b)(2) and the fee required by 37 CFR 1.18(e), the USPTO will issue a certificate of correction reflecting the PTA determination noted above.

Patentee should be aware that in order to preserve the right to review in the United States District Court for the District of Columbia of the USPTO patent term adjustment determination, patentee must ensure that he or she also take the steps required under 35 U.S.C. 154(b)(4)(A) in a timely manner. Nothing in the request for recalculation should be construed as providing an alternative time frame for commencing a civil action under 35 U.S.C. 154(b)(4)(A).

Any questions concerning this decision should be directed to the Office of Patent Legal Administration at 571-272-7702.

UNITED STATES PATENT AND TRADEMARK OFFICE

COMMISSIONER FOR PATENTS
UNITED STATES PATENT AND TRADEMARK OFFICE
WASHINGTON, D.C. 20231
www.uspto.gov

Paper No. 11

RATNER AND PRESTIA
Suite 301
One Westlakes, Berwyn
P.O. Box 980
Valley Forge PA 19482-0980

COPY MAILED

JUL 0 3 2002

OFFICE OF PETITIONS

In re Application of:
Kato et al.
Serial No. 09/871,283
Filed: May 13, 2001
Attorney Docket No. MTS-3253US

: DECISION GRANTING PETITION

This is a decision on the petition filed January 9, 2002, under 37 CFR 1.182 requesting that the original drawings filed on May 13, 2001 in the above-identified application be accepted even though they contain non-English text. The petition will be treated under 37 CFR 1.183.

On August 20, 2001 the Office of Initial Patent Examination (OIPE)mailed a "Notice to File Missing Parts of Nonprovisional Application" requiring petitioners to submit filing fees, an oath/declaration, surcharge for their late filing and substitute drawings because the drawings contained non-English text.

On October 19, 2001 petitioners filed an executed declaration and the surcharge.

On November 15, 2001 OIPE mailed a "Notice of Incomplete Reply of Nonprovisional Application" informing petitioners that petitioners still owed filing fees and were required to file substitute drawings.

On December 26, 2001, OIPE withdrew the November 15, 2001 "Notice of Incomplete Reply of Nonprovisional Application" and informed petitioners that the application was complete.

On January 9, 2002, petitioner filed the present petition.

Petitioners are correct in that a petition is necessary to request suspension of the rule that requires the use of the English alphabet in drawings. 37 CFR 1.84(p)(2). The December 26, 2001 withdrawal of the "Notice of Incomplete Reply of Nonprovisional Application" should have been limited to financial issues solely.

Petitioners have established that the very nature of the invention, methods of processing text, requires figures in Japanese language and in English language. Some of the text being processed is English text and other text is Japanese text. Because having Japanese text in the drawings is intrinsic to the nature of the invention, the Japanese text will be treated as part of the image and will be permitted. The application will be examined as filed.

The petition is **GRANTED**.

The application file will be forwarded to Technology Center 2600 for examination in due course.

Telephone inquiries pertaining to this decision should be directed to Petitions Attorney E. Shirene Willis at (703) 308-6712.

Beverly M. Flanagan
Supervisory Petitions Examiner
Office of Petitions
Office of the Deputy Commissioner
for Patent Examination Policy

E. Shirene Willis
Petitions Attorney
Office of Petitions
Office of the Deputy Commissioner
for Patent Examination Policy

UNITED STATES PATENT AND TRADEMARK OFFICE

Commissioner for Patents
United States Patent and Trademark Office
P.O. Box 1450
Alexandria, VA 22313-1450
www.uspto.gov

ALFRED J MANGELS
4729 CORNELL ROAD
CINCINNATI OH 45241-2433

COPY MAILED

MAY 22 2009

OFFICE OF PETITIONS

Patent No. 6,793,858	:	
Application No. 09/871,285	:	
Filed: May 31, 2001	:	ON PETITION
Issued: September 21, 2004	:	
Attorney Docket No. 2001	:	

This is a decision on the petition under 37 CFR 1.378(c), filed March 16, 3009, to accept the unintentionally delayed payment of a maintenance fee for the above-identified patent.

The petition is **GRANTED**.

The patent issued September 21, 2004. The last day of the grace period for paying the 3.5-year maintenance fee was September 21, 2008. Therefore, since this petition was filed within twenty-four months after the six-month grace period provided in 37 CFR 1.362(e), this petition was timely filed under the provisions of 37 CFR 1.378(c).

The maintenance fee is hereby accepted and the above-identified patent is reinstated as of the mail date of this decision.

Telephone inquiries concerning this decision should be directed to the undersigned at (571) 272-3206.

Liana Walsh
Petitions Examiner
Office of Petitions

UNITED STATES PATENT AND TRADEMARK OFFICE

COMMISSIONER FOR PATENTS
UNITED STATES PATENT AND TRADEMARK OFFICE
P.O. BOX 1450
ALEXANDRIA, VA 22313-1450
www.uspto.gov

Paper No. 21

RATNER AND PRESTIA
Suite 301
One Westlakes, Berwyn
P.O. Box 980
Valley Forge, PA 19482-0980

MAY 24 2004

In re Application of
YAMADA et al.
Application No. 09/871,309
Filed: May 30, 2001
Attorney Docket No. MAT-8140US

DECISION ON PETITION

This is a decision on the petition filed January 21, 2004, requesting that the holding of abandonment in the above-identified application be withdrawn.

The petition to withdraw the holding of abandonment is GRANTED.

A Final Office action was mailed on April 4, 2003, setting forth a three-month period of response.

Petitioner asserts that a Request for Continued Examination (RCE) was timely filed on June 13, 2003 as evidenced by copies of the request for a RCE and the postcard receipt indicating receipt of the RCE and a check in the Patent and Trademark Office.

A review of the PALM database reveals that fees for the RCE was paid by check on June 13, 2003. However, the RCE was not matched with the file and consequently the application was held to be abandoned. The application is not abandoned in fact.

For the above reasons, the Notice of Abandonment is hereby vacated and the holding of abandonment withdrawn. Inconvenience to petitioner is regretted.

The application file is being forwarded to the technical support staff for processing the response to the April 4, 2003 Office action. From there, it will be returned to the examiner for further prosecution.

Richard K. Seidel, Director
Technology Center 2800
Semiconductor, Electrical and Optical
Systems and Components

UNITED STATES PATENT AND TRADEMARK OFFICE

COMMISSIONER FOR PATENTS
UNITED STATES PATENT AND TRADEMARK OFFICE
P.O. BOX 1450
ALEXANDRIA, VA 22313-1450
www.uspto.gov

Paper No. 11

Paul A. Schwarz
Duane, Morris & Heckscher, LLP
Suite 100
100 College Road West
Princeton, NJ 08540

NOV 19 2003

In re Application of:
ALBERT SANTELLI
Serial No. 09/871,315
Filed: May 31, 2001
Attorney Docket No. **Fram Trak-8**

DECISION ON PETITION
TO WITHDRAW HOLDING
OF ABANDONMENT

This is a response to the petition under 37 C.F.R. § 1.181, filed October 3, 2003, to withdraw the holding of abandonment of the above-identified application. No fee is required.

The petition is **DENIED.**

This application became abandoned for failure to timely respond to the final Office action mailed on February 27, 2003.

The petitioner asserts that a timely Amendment and Response after Final Rejection and a return post card receipt were mailed to the United States Patent & Trademark Office (USPTO) on May 15, 2003. To support this assertion, petitioner has provided a copy of the post card receipt that acknowledges receipt of an amendment in the USPTO on May 19, 2003.

A review of the application file record reveals that the above-identified response and a facsimile copy are of record in the application file. Further review, shows that the examiner considered the Amendment and Response after Final Rejection and issued an Advisory action denying entry of the Amendment because it raises new issues that would require further consideration and/or search. The Advisory action was dated September 4, 2003 (108 days after filing the Amendment and Response after Final Rejection).

Consideration of proposed after final amendments are addressed in 37 CFR § 1.113, 37 CFR §1.116, and MPEP 714.13 reproduced, in part, below:

37 CFR § 1.113 (c) states, in part, the following:

"(c) reply to a final rejection or action must include cancellation of or appeal from the rejection of, each rejected claim. If any claim stands allowed, the reply to a final rejection or action must comply with any requirements or objections as to form."

37 CFR § 1.116 (b) and (c) state, in part, the following:

"(b) ... amendments may be made canceling claims or complying with any requirement of form expressly set forth in a previous Office action. Amendments presenting rejected claims in better form for consideration on appeal may be admitted. The admission of, or refusal to admit, an amendment after a final rejection, a final action, an action closing prosecution, or any related proceedings will not operate to relieve the application or patent under reexamination from its condition as subject to appeal or to save the application from abandonment..."

"(c) If amendments touching the merits of the application or patent under reexamination are presented after final rejection, or after appeal has been taken, or when such amendment might not otherwise be proper, they may be admitted upon a showing of good and sufficient reasons why they are necessary and were not earlier presented."

Section 714.13 of the MPEP states, in part, the following:

"An amendment filed at any time after final rejection but before an appeal brief is filed, may be entered upon or after filing of an appeal brief provided the total effect of the amendment is to (A) remove issues for appeal, and/or (B) adopt examiner suggestions."

* * *

"It should be noted that under 37 CFR 1.181(f), the filing of a 37 CFR 1.181 petition will not stay the period for reply to an examiner's action which may be running against an application. See MPEP § 1207 for appeal and post-appeal procedure."

The Amendment and Response after Final Rejection received on May 19, 2003 was been duly considered by the examiner and did not place the application in condition for allowance for the reasons stated in the Advisory action.

Under current practice, since the Amendment and Response after Final Rejection did not placed the application in condition for allowance, a proper reply to the Final Rejection was not timely filed and accordingly the application became abandoned by operation of law for failure to timely file a reply to the Final Rejection of February 27, 2003.

A Notice of Appeal (and fee) or a request for continued examination (RCE) and fee or another amendment which placed the application in condition for allowance would have been a proper reply to Final Rejection if timely filed. A review of the application file does reveal that any such papers were filed.

In view of the above stated reasons, the application remains abandoned and the petition to withdraw the holding of abandonment for the above-identified application is denied.

Any request for reconsideration must be filed within TWO MONTHS of the date of this decision.

The request for Continued Examination is noted. Petitioner may wish to consider filing a petition under 37 CFR 1.137(a) or (b) requesting that the application be revived where the request for Continued Examination may be properly considered.

Inquiries regarding this decision should be directed to Jose' G. Dees at (703) 308-4628.

Richard K. Seidel, Director
Technology Center 2800
Semiconductor, Electrical and Optical
Systems and Components

UNITED STATES PATENT AND TRADEMARK OFFICE

COMMISSIONER FOR PATENTS
UNITED STATES PATENT AND TRADEMARK OFFICE
P.O. BOX 1450
ALEXANDRIA, VA 22313-1450
www.uspto.gov

Paper No. 14

Paul A. Schwartz
Duane Morris & Heckscher
Suite 100
100 College Road West
Princeton, NJ 08540

COPY MAILED
FEB 26 2004
OFFICE OF PETITIONS

In re Application of
Santelli, Albert
Application No. 09/871,315
Filed: May 31, 2001
Attorney Docket No. Fram Trak-8

ON PETITION

This is a decision on the petition under 37 CFR 1.137(b), filed December 8, 2003, to revive the above-identified application.

The petition is Granted.

The above-identified application became abandoned for failure to reply within the meaning of 37 CFR 1.113 in a timely manner in reply to the final Office action mailed February 27, 2003, which set a shortened statutory period for reply of three months from the mail date of the Notice. No extensions of time under the provisions of 37 CFR 1.136 have been obtained. Accordingly, the application became abandoned on May 20, 2003.

The application file is being forwarded to Technology Center AU 2831 for processing the Request for Continued Examination under 37 CFR 1.114 filed with the instant petition.

Telephone inquiries should be directed to the undersigned at (703) 308-6911.

Latrice Bond
Paralegal Specialist
Office of Petitions
Office of the Deputy Commissioner
for Patent Examination Policy

UNITED STATES PATENT AND TRADEMARK OFFICE

COMMISSIONER FOR PATENTS
UNITED STATES PATENT AND TRADEMARK OFFICE
P.O. BOX 1450
ALEXANDRIA, VA 22313-1450
www.uspto.gov

Paper No. 16

Antoinette F. Konski
McCutchen Doyle Brown & Enersen LLP
Three Embarcadero, Suite 1800
San Francisco, CA 94111-4067

COPY MAILED

JUL 0 2 2003

OFFICE OF PETITIONS

ON PETITION

In re Application of
Fikstad et al.
Application No. 09/871,318
Filed: May 31, 2001
Attorney Docket No. WP 2001.00

This is a decision on the petition under 37 CFR 1.183 in the alternative a petition under 37 CFR 1.137 b, filed June 17, 2003, to revive the above-identified application. The petition under 37 CFR 1.183 is more appropriately treated as a petition under 37 CFR 1.181 because petitioner is essentially requesting to have the abandonment withdrawn.

The petition to withdraw the holding of abandonment is **Granted**.

The petition to revive under 37 CFR 1.137(b) is **Dismissed as Moot.**

This above-identified application became abandoned for failure to file a reply within the meaning of 37 CFR §1.113 to the final Office Action of November 5, 2002. The final Office Action set a three (3) month shortened statutory period for reply. No extensions of time were obtained under the provisions of 37 CFR §1.136(a). Accordingly, this application became abandoned on February 6, 2003. A Notice of Abandonment was mailed on May 28, 2003.

PETITION TO WITHDRAW THE HOLDING OF ABANDONMENT

Petitioner asserts that the Final Office Action mailed on November 5, 2002 was never received because it was mailed to the former correspondence address of record. A review of the record indicates a document titled Prosecution By Assignee and Power of Attorney under 37 CFR 3.71 was received on October 5, 2001. The document which revoked previous powers granted and changed the correspondence address of record was not entered. As such the final Office Action was mailed to the incorrect address.

In view of the evidence, the Notice of Abandonment is hereby WITHDRAWN. A petition fee has not been charged.

The two-month period for filing an appeal brief in triplicate (accompanied by the fee required by 37 CFR 1.17(c)), runs from the date of this decision.

As per petitioner's request the Notice of Appeal fee of $320.00 has been charged to deposit account 50-2518.

A copy of the final office action is provided for petitioner's convenience.

This application is being forwarded to Technology Center 1600 for further processing.

Telephone inquiries should be directed to the undersigned at (703) 306-0251.

Charlema R. Grant

Charlema R. Grant
Petitions Attorney
Office of Petitions

UNITED STATES PATENT AND TRADEMARK OFFICE

Commissioner for Patents
United States Patent and Trademark Office
P.O. Box 1450
Alexandria, VA 22313-1450
www.uspto.gov

BINGHAM, MCCUTCHEN LLP
THREE EMBARCADERO CENTER
18 FLOOR
SAN FRANCISCO CA 94111-4067

COPY MAILED

JUL 27 2006

OFFICE OF PETITIONS

In re Application of :
Fikstad et al. :
Application No. 09/871,318 :
Filed: May 31, 2001 :
Title: Transdermal Delivery of Lasfoxifene :

ON PETITION

This is a decision on the petition under 37 CFR §1.137(b) filed July 6, 2006 to revive the above-identified application.

This above-identified application became abandoned for failure to file a response to a non-final Office Action which was mailed on October 20, 2004. The non-final Office Action set a three (3) month shortened statutory period for reply. No extensions of time were obtained under the provisions of 37 CFR §1.136(a). Accordingly, this application became abandoned on January 21, 2005. A Notice of Abandonment was mailed on June 6, 2005.

The requirements for a grantable petition under 37 CFR §1.137(b) have been met. This petition is hereby **Granted**.

This application is being forwarded to Technology Center 1600 for further processing of the amendment submitted with the instant petition.

Telephone inquiries concerning this matter should be directed to the undersigned at (571) 272-3215.

Charlema R. Grant

Charlema R. Grant
Petitions Attorney
Office of Petitions

UNITED STATES PATENT AND TRADEMARK OFFICE

COMMISSIONER FOR PATENT
UNITED STATES PATENT AND TRADEMARK OFFIC
WASHINGTON, D.C. 20231
www.uspto.go

JJGJr.: 12-02

Paper 10

ST. ONGE STEWARD
JOHNSTON & REENS, LLC
986 BEDFORD STREET
STAMFORD CT 06905-5619

COPY MAILED
DEC 2 4 2002
OFFICE OF PETITIONS

In re Application of
Wnek, et al :
Application No. 09/871,324 : ON PETITION
Filed: 31 May, 2001 :
Attorney Docket No. 4348-000119/DVA :

This is a decision on the petitions filed 19 November, 2002:

- under 37 C.F.R. §1.137(a)[1] to revive the above-identified application (and in light of the allegation of non-receipt also considered as a request to withdraw the holding of abandonment under 37 C.F.R. §1.181[2]); and,

---

[1] A Petition filed under the provisions of 37 C.F.R. §1.137(a) must be accompanied by:
(a) The required reply, unless previously filed. In a nonprovisional application abandoned for failure to prosecute, the required reply may be met by the filing of a continuing application. In an application for patent, abandoned or lapsed for failure to pay the issue fee or any portion thereof, the required reply must be the payment of the issue fee or any outstanding balance thereof;
(b) the petition fee required by 37 C.F.R. §1.17(l);
© A showing to the satisfaction of the Commissioner that the entire delay in filing the required reply from the reply due date until the filing of a grantable petition pursuant to the is paragraph was unavoidable; and
(d) Any terminal disclaimer (and fee set forth in 37 C.F.R. §1.20(d)) required pursuant to 37 C.F.R. §1.137(c).

An application is "unavoidably" abandoned only where Petitioner (or Petitioner's counsel) takes all action necessary for a proper response to the outstanding Office action, but through the intervention of unforeseen circumstances, the response is not timely received in the Office. That is, in the context of ordinary human affairs the test is such care as is generally used and observed by prudent and careful persons in relation to their most important business. Ex parte Pratt, 1887 Dec. Comm'r Pat. 31 (Comm'r Pat. 1887); Ex parte Henrich, 1913 Dec. Comm'r Pat. 139, 141 (Comm'r. Pat. 1913).

[2] The regulations at 37 C.F.R. §1.181 provide, in pertinent part:
§1.181 Petition to the Commissioner.
(a) Petition may be taken to the Commissioner: (1) From any action or requirement of any examiner in the *ex parte* prosecution of an application which is not subject to appeal to the Board of Patent Appeals and Interferences or to the court; (2) In cases in which a statute or the rules specify that the matter is to be determined directly by or reviewed by the Commissioner; and (3) To invoke the supervisory authority of the Commissioner in appropriate circumstances. * * *
(b) Any such petition must contain a statement of the facts involved and the point or points to be reviewed and the action requested. Brief or memoranda, if any, in support thereof should accompany or be embodied in the petition; and where facts are to be proven, the proof in the form of affidavits or declaration (and exhibits, if any) must accompany the petition.
© When a petition is taken from an action or requirement of an examiner in the *ex parte* prosecution of an application, it may be required that there have been a proper request for reconsideration (§1.111) and a repeated action by the examiner. The examiner may be directed by the Commissioner to furnish a written statement, within a specified time, setting forth the reasons for his decision upon the matters averred in the petition, supplying a copy thereof to the petitioner.
(d) Where a fee is required for a petition to the Commissioner the appropriate section of this part will so indicate. If any required fee does not accompany the petition, the petition will be dismissed. * * *
(f) Except as otherwise provided in these rules, any such petition not filed within 2 months from the action complained of, may be dismissed as

- alternatively, under 37 C.F.R. §1.137(b)[3] alleging unintentional delay.

For the reasons set forth below, the petition:

- under 37 C.F.R. §1.137(b) is **GRANTED**;[4]
- under 37 C.F.R. §1.137(a) is **DISMISSED**; and
- as considered under 37 C.F.R. §1.181 is **DISMISSED**.

NOTE: A Power of Attorney was filed contemporaneously with the petition, however, there is no indication of the authority of the individual who signed the document, Richard Gehrin (Mr. Gehrin), to do so. If Mr. Gehrin is the authorized agent of the assignee, the record should so reflect.

As a result, the Power of Attorney has not, as of this writing, been accepted, and the Petitioner, therefore, cannot be said to have been as yet empowered to act on behalf of the applicants and/or assignee. to prosecute the instant application.

If Petitioner desires to receive future correspondence regarding this application, the appropriate power of attorney documentation must be submitted. A courtesy copy of this decision will be mailed to Petitioner. However, all future correspondence will be directed to the address of record until such time as appropriate instructions are received to the contrary.[5]

---

untimely. The mere filing of a petition will not stay the period for reply to an Examiner's action which may be running against an application, nor act as a stay of other proceedings. * * * (Emphasis supplied.)

[3] Effective December 1, 1997, the provisions of 37 C.F.R. §1.137(b) now provide that where the delay in reply was unintentional, a petition may be filed to revive an abandoned application or a lapsed patent pursuant to 37 C.F.R. §1.137(b). a grantable petition filed under the provisions of 37 C.F.R. §1.137(b) must be accompanied by:
(1) the required reply, unless previously filed. In a nonprovisional application abandoned for failure to prosecute, the required reply may be met by the filing of a continuing application. In an application or patent, abandoned or lapsed for failure to pay the issue fee or any portion thereof, the required reply must be the payment of the issue fee or any outstanding balance thereof.
(2) the petition fee as set forth in 37 C.F.R. §1.17(m);
(3) a statement that the entire delay in filing the required reply from the due date for the reply until the filing of a grantable petition pursuant to 37 C.F.R. §1.137(b) was unintentional. The Commissioner may require additional information where there is a question whether the delay was unintentional; and
(4) any terminal disclaimer (and fee set forth in 37 C.F.R. §1.20(d)) required pursuant to 37 C.F.R. §1.137(c). (Emphasis supplied.)

[4] Pursuant to Petitioner's authorization, the petition fee ($1,280.00) is charged to Deposit Account 08-0750.

[5] On 23 December, 2002, a telephone call was made to Ryan W. Massey (Reg. No. 38,543)--who signed the pleadings--and Michael Brennan (Reg. No. 30,612) and Stanley M. Erjavac (Reg. No. 38,442)--who are designated as Counsel under the Power of Attorney submitted contemporaneously with the instant petitions--of Harness Dickey & Pierce PLC (the Harness firm) to raise this matter with then, however, they were unavailable and a message could only be left with Mr. Erjavac's secretary alerting them to the fact that mailings from the Office would continue to go to the St. Onge firm as Counsel of Record until such time as this matter was resolved.

BACKGROUND

The record indicates that:

- Petitioner failed to response properly and timely to a non-final Office action mailed on 15 January, 2002, with a response due (absent extension of time) on or before 15 April, 2002;
- the application went abandoned after midnight 15 April, 2002;
- the Notice of Abandonment was mailed on 17 October, 2002;
- Petitioner alleges that responsibility for prosecution shifted in March 2002 from the firm of St. Onge Steward Johnston & Reens LLC (the St. Onge firm) to Harness Dickey & Pierce PLC (the Harness firm) , however, there is no record action taken by either firm at that time to Notice the Office;
- Petitioner further alleges that an audit of reflects no effort in the records of the St. Onge firm or the Harness firm as to receipt of the 15 January, 2002, Office action, however, again, Petitioner has submitted no contemporaneous documentation (copies of file jackets, docket sheets, tickler records, etc.) in support of this allegation;
- Petitioner filed contemporaneously with the instant petitions a reply to the 15 January, 2002, Office action;
- while Petitioner requested consideration under 37 C.F.R. §1.137(b) and authorized the fee, Petitioner failed to make the express statement of unintentional delay under the regulation, nonetheless, the petition is being so interpreted and Petitioner must notify the Office if this is an incorrect reading of the petition.

STATUTES, REGULATIONS AND ANALYSIS

Congress has authorized the Commissioner to "revive an application if the delay is shown to the satisfaction of the Commissioner to have been "unavoidable." 35 U.S.C. §133 (1994).[6]

The regulations at 37 C.F.R. §1.137 set forth the requirements for a petitioner to revive a previously unavoidably or unintentionally abandoned application under this congressional grant of authority .

---

[6] 35 U.S.C. §133 provides:
35 U.S.C. §133 Time for prosecuting application.
Upon failure of the applicant to prosecute the application within six months after any action therein, of which notice has been given or mailed to the applicant, or within such shorter time, not less than thirty days, as fixed by the Commissioner in such action, the application shall be regarded as abandoned by the parties thereto, unless it be shown to the satisfaction of the Commissioner that such delay was unavoidable.

The language of 35 U.S.C. §133 and 37 C.F.R. §1.137(a) is clear, unambiguous, and without qualification: the delay in tendering the reply to the outstanding Office action, as well as filing the first petition seeking revival, must have been unavoidable for the reply now to be accepted on petition.[7]

Delays in responding properly raise the question whether delays are unavoidable.[8]

Where there is a question whether the delay was unavoidable, Petitioners must meet the burden of establishing that the delay was unavoidable within the meaning of 35 U.S.C. §133 and 37 C.F.R. §1.137(a).[9]

And Petitioner must be diligent in attending to the matter.[10]

Moreover, it long has been the position of the Office that the use of the filing periods (such as in 37 C.F.R. §1.137(b)) as an "extension of time" is an "abuse" of the procedures for reviving abandoned applications, and is contrary to the meaning and intent of the regulation.[11]

The Office has indicated that petitions to revive must be filed promptly after the applicant becomes aware of the abandonment.[12] Failure to do so does not demonstrate the care required under Pratt, and so cannot satisfy the test for diligence and due care.

By contrast, unintentional delays are those that do not satisfy the very strict statutory and regulatory requirements of unavoidable delay, and also, by definition, are not intentional.[13]

---

[7] Therefore, by example, an unavoidable delay in the payment of the Filing Fee might occur if a reply is shipped by the US Postal Service, but due to catastrophic accident, the delivery is not made.

[8] See: *Changes to Patent Practice and Procedure; Final Rule Notice*, 62 *Fed. Reg.* at 53158-59 (October 10, 1997), 1203 *Off. Gaz. Pat. Office* at 86-87 (October 21, 1997).

[9] See: In re Application of G, 11 USPQ2d 1378, 1380 (Comm'r Pats. 1989).

[10] See: Diligence in Filing Petitions to Revive and Petitions to Withdraw the Holding of Abandonment, 1124 Off. Gaz. Pat. Office 33 (March 19, 1991). It was and is Petitioner's burden to exercise diligence in seeking either to have the holding of abandonment withdrawn or the application revived. See 1124 Off. Gaz. Pat. Office supra.

[11] See: In re Application of S, 8 USPQ2d 1630, 1632 (Comm'r Pats. 1988). Where there is a question whether the delay was unintentional, the petitioner must meet a burden of establishing that the delay was unintentional within the meaning of 35 U.S.C. § 41(a)(7) and 37 C.F.R. §1.137(b). See: In re Application of G, 11 USPQ2d 1378, 1380 (Comm'r Pats. 1989).

[12] See: Diligence in Filing Petitions to Revive and Petitions to Withdraw the Holding of Abandonment, 1124 Off. Gaz. Pat. Office 33 (March 19, 1991). It was and is Petitioner's burden to exercise diligence in seeking either to have the holding of abandonment withdrawn or the application revived. See 1124 Off. Gaz. Pat. Office supra.

[13] Therefore, by example, an unintentional delay in the reply might occur if the reply and transmittal form are to be prepared for shipment by the US Postal Service, but other pressing matters distract one's attention and the mail is not timely deposited for shipment.

Allegations as to Withdrawal
of the Holding of Abandonment and
Unavoidable Delay

Petitioner makes no showing in support through contemporaneous documentation of either unavoidable delay or withdrawal of the holding of abandonment.

While there may have been a lapse or mistake by Counsel's offices (either the St. Onge firm and/or the Harness firm), it in no way satisfies the Pratt showing required herein.

More than 35 years ago the Court of Customs and Patent Appeals warned practitioners in Lorenz v. Finkl[14] that "ordinary prudence" demands that they take "appropriate action" as directed by the Office, and practitioners disregard this warning at peril to their client's matters. (Moreover, as long as the attorney/agent has not acted to deceive the client,[15] the act(s) or omissions of the attorney/agent are imputed wholly to the applicant/client who hired the attorney/agent.[16])

As is clear, Petitioner fails to satisfy the burdens set forth under 37 C.F.R. §1.137(a), revival based upon unavoidable delay is not appropriate, and the petition therefor hereby is **dismissed**.

The courts have determined the construct for properly supporting a request to withdraw a holding of abandonment.[17]

As is clear, Petitioner fails to satisfy the burdens set forth in Delgar v. Schulyer. Withdrawal of the holding of abandonment is not appropriate, and the petition therefor as considered under under 37 C.F.R. §1.181 must be and hereby is **dismissed**.

Moreover, Petitioner fails to satisfy the showing in support of an allegation of unavoidable delay, and the petition under under 37 C.F.R. §1.137(a) must be and hereby is **dismissed**.

---

[14] Lorenz v. Finkl, 142 USPQ 26, 27-28 (CCPA 1964).

[15] When an attorney intentionally conceals a mistake he has made, thus depriving the client of a viable opportunity to cure the consequences of the attorney's error, the situation is not governed by the stated rule in Link for charging the attorney's mistake to his client. In re Lonardo, 17 USPQ2d 1455 (Comm'r. Pat. 1990).

[16] The actions or inactions of the attorney/agent must be imputed to the petitioners, who hired the attorney/agent to represent them. Link v. Wabash Railroad Co., 370 U.S. 626, 633-634, 82 S.Ct. 1386, 1390-91 (1962). The failure of a party's attorney to take a required action or to notify the party of its rights does not create an extraordinary situation. Moreover, the neglect of a party's attorney is imputed to that party and the party is bound by the consequences. See Huston v. Ladner, 973 F.2d 1564, 23 USPQ2d 1910 (Fed Cir. 1992); Herman Rosenberg and Parker-Kalon Corp. v. Carr Fastener Co., 10 USPQ 106 (2d Cir. 1931).

[17] See: Delgar v. Schulyer, 172 USPQ 513 (D.D.C. 1971).

Allegation of Unintentional Delay

Petitioner has requested that the matter alternatively be considered under 37 C.F.R. §1.137(b), submitted the reply, and the statement of unintentional delay has been presumed from the request for consideration.

Therefore, the petition under 37 C.F.R. §1.137(b) hereby is **granted**.

This matter is forwarded to Technology Center 1700 for further processing in due course.

Telephone inquiries regarding this decision should be directed to the undersigned at (703) 305-9199.

John J. Gillon, Jr.
Senior Attorney
Office of Petitions
Office of the Deputy Commissioner
for Patent Examination Policy

cc:
Harness Dickey & Pierce PLC
P.O. Box 828
Bloomfield Hills, MI 48303

UNITED STATES PATENT AND TRADEMARK OFFICE

Technology Center 1700

Mailed: MAR 1 2004

rvk
Paper Number: 16

In re application of
John Wnek et al
Serial No. 09/871,324
Filed: May 31, 2001
For: SPLICE WELDER:

DECISION ON PETITION

This is a response to the PETITION TO WITHDRAW HOLDING OF ABANDONMENT - OFFICE ACTION NOT RECEIVED, filed December 01, 2003. The petition requests that the abandonment, as set forth in the Notice of Abandonment of November 04, 2003, for failure to timely file a proper response to the Office letter dated April 18, 2003 be withdrawn. The petitioner asserts that the Office letter of April 18, 2003 was not received by applicants.

DECISION

The instant request is accepted as a timely petition under 37 C.F.R. 1.181 (no fee), and is evaluated under the procedures regarding an acceptable showing of non-receipt of an office action. See MPEP 711.03(c)(II).

The evidence presented is sufficient to establish that the Office letter of April 18, 2003 was not received by the petitioner. The evidence provided includes a statement by the petitioner that the Office letter of April 18, 2003 was not received, a statement that a search of the file and docket records was made, and a statement that the search revealed the Office letter of April 18, 2003 was not received. Also provided are: 1) copies of the Attorney Patent Docket for the due date of July 18, 2003, where the action due of 09/871,324 for the Office letter of April 18, 2003 would have been posted had it been timely received ; 2) a copy of the statement under 37 C.F.R.3.73(b) and Power of Attorney changing the correspondence address to Harness, Dickey & Pierce, P.L.C., which was filed with the USPTO on January 13, 2003 and 3) a copy of the returned stamped postcard dated January 21,

2003. A review of the instant application file indicates that the applicants filed a Statement Under 37 CFR 3.73(b) and Power Of Attorney on January 21, 2003 (Paper No. 11) to request a change of the correspondence address, and the USPTO records have not been updated to include the current address of the attorney.

Therefore, the abandonment is hereby withdrawn, and the application is returned to pending status. The application shall be forwarded to the examiner for prompt remailing of the above noted Office letter to the correspondence address and restarting of the statutory period of response from the remail date thereof.

The instant petition was accompanied by $130.00 as a petition fee. However, a petition of this type does not require a $130.00 petition fee. Therefore, a refund of the $130.00 may be obtained by directing a copy of this decision along with a written request for such a refund to the Office of Finance.

The Petition is **GRANTED**.

Jacqueline Stone, Director
Technology Center 1700
Chemical and Materials Engineering

HARNESE, DICKEY & PIERCE, P.L.C.
P.O.BOX 828
BLOOMFIELD HILLS, MI 48303

UNITED STATES PATENT AND TRADEMARK OFFICE

#9

SEP 14 2003

UNDER SECRETARY OF COMMERCE FOR INTELLECTUAL PROPERTY AND
DIRECTOR OF THE UNITED STATES PATENT AND TRADEMARK OFFICE
P.O. BOX 1450
ALEXANDRIA, VA 22313-1450

MATTHEW P. VINCENT
ROPES & GRAY
ONE INTERNATIONAL PLACE
BOSTON, MA 02110-2624

In re application of	:
Ragupathy Madiyalakan et al.	:
Serial No. : 09/871,339	:
Filed : May 31, 2001	: WITHDRAWAL OF ABANDONMENT
Attorney Docket No. : AREX-P02-005	:

This is in response to applicants' petition under 37 CFR 1.181, filed May 29, 2003, requesting withdrawal of the holding of abandonment based on the timely filing of a response to the Office communication mailed August 6, 2002.

A review of the file history shows that the examiner mailed an Office action (restriction requirement) to applicant on May 21, 2002. Applicants responded on June 27, 2002. On August 6, 2002 the examiner mailed a letter advising applicants that the response was incomplete and requiring a more detailed election. On April 22, 2003 the examiner mailed a Notice of Abandonment indicating that no reply to the letter of August 6, 2002 had been received.

Applicants state that a response, including a more detailed election and a petition for a 4 month extension of time, was filed on September 12, 2002, as evidenced by the properly executed Certificate of Mailing on the reply. Applicants provide a copy of the submitted reply with the petition, and also a declaration by Susan Mulvaney attesting to the fact that the response was mailed on September 12, 2002. In view of this evidence, applicants are considered to have submitted a timely reply.

Applicants' petition is **GRANTED**. The application is restored to pending status with the mailing of this decision and will be forwarded to the examiner for consideration of the elected invention on the merits.

Should there be any questions with regard to this letter please contact Bruce Campell by letter addressed to the Director, Technology Center 1600, Washington, DC 20231, or by telephone at (703) 308-4205 or by facsimile transmission at (703) 746-5006.

Jasemine C. Chambers

Jasemine C. Chambers
Director, Technology Center 1600

UNITED STATES PATENT AND TRADEMARK OFFICE

COMMISSIONER FOR PATENTS
UNITED STATES PATENT AND TRADEMARK OFFICE
P.O. BOX 1450
ALEXANDRIA, VA 22313-1450
www.uspto.gov

Paper No. 17

EDLIN SOLOMON
ST. SHAPIRA 5/3
RISHON LE ZION, 75284
ISRAEL

AIRMAIL

COPY MAILED
MAR 1 9 2004
OFFICE OF PETITIONS

In re Application of :
Solomon Edlin :
Application No. 09/871,383 : ON PETITION
Filed: May 31, 2001 :
Attorney Docket No. :

This is a decision on the petition under 37 CFR 1.137(a), filed November 30, 2003, to revive the above-identified application.

The petition is **DISMISSED**.

Any further petition to revive the above-identified application must be submitted within TWO (2) MONTHS from the mail date of this decision. Extensions of time under 37 CFR 1.136(a) are permitted. The reconsideration request should include a cover letter entitled "Petition under 37 CFR 1.137." This is **not** a final agency action within the meaning of 5 U.S.C. § 704.

The above-identified application became abandoned for failure to provide a complete and timely reply to the Notice of File Missing Parts of Nonprovisional Application, mailed September 11, 2001.

A grantable petition to revive an abandoned application under 37 CFR 1.137(a) must be accompanied by: (1) the required reply (unless previously filed), which may be met by the filing of a continuing application in a nonprovisional application abandoned for failure to prosecute, but must be the payment of the issue fee or any outstanding balance thereof in an application or patent, abandoned or lapsed for failure to pay the issue fee or any portion thereof; (2) the petition fee required by 37 CFR 1.17(l); (3) an adequate showing to the satisfaction of the Commissioner that the entire delay in filing the required reply from the due date for the reply until the filing of a grantable petition pursuant to 37 CFR 1.137(a) was unavoidable; and (4) a terminal disclaimer (and fee as set forth in 37 CFR 1.20(d)) for an application filed prior to June 8, 1995. This petition lacks item (3).

35 USC 133 states, "Upon failure of the applicant to prosecute the application within six months after any action therein, of which notice has been given or mailed to the applicant, or within such shorter time, not less than thirty days, as fixed by the Director in such action, the application shall

be regarded as abandoned by the parties thereto, unless it be shown to the satisfaction of the Director that such delay was unavoidable."

As to item (3), the showing of record is inadequate to establish unavoidable delay within the meaning of 35 U.S.C. § 133 and 37 CFR 1.137(a). Specifically, an application is "unavoidably" abandoned only where petitioner, or counsel for petitioner, takes all action necessary for a proper response to the outstanding Office action, but through in the intervention of unforeseen circumstances, such as failure of mail, telegraph, facsimile, or the negligence of otherwise reliable employees, the response is not timely received in the Office. Ex parte Pratt, 1887 Dec. Comm'r Pat. 31 (Comm'r Pat. 1887).

In the instant case, petitioner has not provided any explanation as to why he was "unavoidably" prevented from supplying a complete reply to the Notice of September 11, 2001, but simply states that a "mistake was detected by me on 08.15.2003." While an oversight or "mistake" in supplying a complete reply to an Office action is a sufficient basis on which to establish "unintentional delay," such, however, does not constitute a basis for a finding that the delay in supplying a complete reply to the September 11, 2001 Notice was unavoidable within the meaning of 35 U.S.C. § 133 and 37 CFR 1.137(a). Therefore, petitioner has not demonstrated that all action for submitting a complete reply to the Notice was taken in this case to avoid abandonment thereof. See Ex parte Pratt, supra.

While the showing of record is not sufficient to establish to the satisfaction of the Commissioner that the delay was unavoidable, petitioner is not precluded from obtaining relief by filing a petition pursuant to 37 CFR 1.137(b) on the basis of unintentional delay. A grantable petition pursuant to 37 CFR 1.137(b) must be accompanied by (1) the reply required to the outstanding Office action or notice, unless previously filed; (2) the petition fee as set forth in 37 CFR 1.17(m);[1] (3) a statement that the entire delay in filing the required reply from the due date for the reply until the filing of a grantable petition pursuant to this paragraph was unintentional. The Commissioner may require additional information where there is a question whether the delay was unintentional; and (4) any terminal disclaimer (and fee as set forth in 37 CFR 1.20(d)) required pursuant to paragraph (d) of this section.

The filing of a petition under the unintentional standard cannot be intentionally delayed and therefore should be filed promptly. A person seeking revival due to unintentional delay cannot make a statement that the delay was unintentional unless the entire delay, including the delay from the date it was discovered that the application was abandoned until the filing of the petition to revive under 37 CFR 1.137(b), was unintentional. A statement of unintentional delay is not appropriate if petitioner intentionally delayed the filing of a petition for revival under 37 CFR 1.137(b).

---

[1] An addition of $50.00 is required for processing a returned check.

Further correspondence with respect to this matter should be addressed as follows:

By mail: Mail Stop PETITION
Commissioner for Patents
Post Office Box 1450
Alexandria, VA 22313-1450

By hand: Crystal Plaza Two, Lobby
2011 South Clark Place
Room 1B03
Arlington, VA 22202

By fax: (703) 872-9306
Attn: Office of Petitions

Telephone inquiries concerning this decision should be directed to Wan Laymon at (703) 306-5685.

Frances Hicks
Lead Petitions Examiner
Office of Petitions
Office of the Deputy Commissioner
for Patent Examination Policy

UNITED STATES PATENT AND TRADEMARK OFFICE

Commissioner for Patents
United States Patent and Trademark Office
P.O. Box 1450
Alexandria, VA 22313-1450
www.uspto.gov

Paper No. 21

EDLIN SOLOMON
ST. SHAPIRA 5/3
RISHON LE ZION, 75284
ISRAEL

AIRMAIL

COPY MAILED
SEP 01 2004
OFFICE OF PETITIONS

In re Application of :
Solomon Edlin :
Application No. 09/871,383 :
Filed: May 31, 2001 :
Attorney Docket No. :

ON PETITION

This is a decision on the renewed petition under 37 CFR 1.137(a), filed May 5, 2004, to revive the above-identified application.

The petition is **DISMISSED**.

Any further petition to revive the above-identified application must be submitted within TWO (2) MONTHS from the mail date of this decision. Extensions of time under 37 CFR 1.136(a) are permitted. The reconsideration request should include a cover letter entitled "Petition under 37 CFR 1.137." This is **not** a final agency action within the meaning of 5 U.S.C. § 704.

The above-identified application became abandoned for failure to reply in a timely manner to the Notice to File Missing Parts of Nonprovisional Application (Notice) mailed September 11, 2001. The Notice set a period for reply of two (2) months from the mail date of the Notice. A two (2) month extensions of time under the provisions of 37 CFR 1.136(a) were obtained.[1] Accordingly, the above-identified application became abandoned on February 12, 2002.

A grantable petition to revive an abandoned application under 37 CFR 1.137(a) must be accompanied by: (1) the required reply (unless previously filed), which may be met by the filing of a continuing application in a nonprovisional application abandoned for failure to prosecute, but must be the payment of the issue fee or any outstanding balance thereof in an application or patent, abandoned or lapsed for failure to pay the issue fee or any portion thereof; (2) the petition fee required by 37 CFR 1.17(l); (3) an adequate showing to the satisfaction of the Commissioner that the entire delay in filing the required reply from the due date for the reply until the filing of a

[1] The fee for a three (3) month extensions of time was $460.00 and petitioner paid $330.00.

grantable petition pursuant to 37 CFR 1.137(a) was unavoidable; and (4) a terminal disclaimer (and fee as set forth in 37 CFR 1.20(d)) for an application filed prior to June 8, 1995. This petition lacks item (3).

The showing of record is not sufficient to establish to the satisfaction of the Commissioner that the delay was unavoidable within the meaning of 35 U.S.C. § 133 and 37 CFR 1.137(a). See MPEP 711.03(c)(III)(c))(2) for a discussion of the requirements for a showing of unavoidable delay.

On the renewed petition, applicant asserts that the delay in responding to the Notice was unavoidable because, "...no access to patent fund of U.S.... Did not know Patent laws and rules of U.S.... moreover condition of health did not permit me to answer quicker." A delay resulting from the lack of knowledge or improper application of the patent statute, rules of practice or the MPEP does not constitute an "unavoidable" delay. See Haines v. Quigg, 673 F. Supp. 314, 317, 5 USPQ2d 1130, 1132 (N.D. Ind. 1987), Vincent v. Mossinghoff, 230 USPQ 621, 624 (D.D.C. 1985); Smith v. Diamond, 209 USPQ 1091 (D.D.C. 1981); Potter v. Dann, 201 USPQ 574 (D.D.C. 1978); Ex parte Murray, 1891 Dec. Comm'r Pat. 130, 131 (1891).

While petitioner's illness was indeed unfortunate, the showing of unavoidable delay is insufficient. If the delay was in fact due to petitioner's medical condition, petitioner has not provided any evidence to show the dates, nature, and degree of petitioner's illness. Additionally, there is no statement from petitioner's attending physician regarding whether or not petitioner's illness during the period in question would have prevented him from timely responding to the Office action. Without a doctor's statement as to the dates, nature, and degree of petitioner's illness during the period in question, it cannot be concluded that petitioner's illness asserted to have prevented him from timely responding to the outstanding Office action was such as to constitute unavoidable delay within the meaning of 35 U.S.C. § 133 and 37 CFR 1.137(a).

Under the circumstances, petitioner has not carried his burden of proof to show that the delay was unavoidable as required by statute and by regulations of the U.S. Patent and Trademark Office. Petitioner is reminded that a petition to revive an application under 37 CFR 1.137(a) cannot be granted where a petitioner has failed to meet his burden of establishing unavoidable delay within the meaning of 37 CFR 1.137(a) and 35 USC 133. Hainves v. Quigg, 673 F. Supp. 314, 5 USPQ2 1130 (N.D. Ind. 1987).

While the showing of record is not sufficient to establish to the satisfaction of the Commissioner that the delay was unavoidable, petitioner is not precluded from obtaining relief by filing a petition pursuant to 37 CFR 1.137(b) on the basis of unintentional delay. A grantable petition pursuant to 37 CFR 1.137(b) must be accompanied by (1) the reply required to the outstanding Office action or notice, unless previously filed; (2) the petition fee as set forth in 37 CFR 1.17(m);[2] (3) a statement that the entire delay in filing the required reply from the due date for the reply until the filing of a grantable petition pursuant to this paragraph was unintentional. The Commissioner may require additional information where there is a question whether the delay

[2] An addition of $50.00 is required for processing a returned check.

was unintentional; and (4) any terminal disclaimer (and fee as set forth in 37 CFR 1.20(d)) required pursuant to paragraph (d) of this section.

The filing of a petition under the unintentional standard cannot be intentionally delayed and therefore should be filed promptly. A person seeking revival due to unintentional delay cannot make a statement that the delay was unintentional unless the entire delay, including the delay from the date it was discovered that the application was abandoned until the filing of the petition to revive under 37 CFR 1.137(b), was unintentional. A statement of unintentional delay is not appropriate if petitioner intentionally delayed the filing of a petition for revival under 37 CFR 1.137(b).

Further correspondence with respect to this matter should be addressed as follows:

By mail: Mail Stop PETITIONS
Commissioner for Patents
Post Office Box 1450
Alexandria, VA 22313-1450

By hand: Customer Window located at:
U.S. Patent and Trademark Office
220 20th Street S
Customer Window, Mail Stop Petitions
Crystal Plaza Two Lobby, Room 1B03
Arlington, VA 22202

By fax: (703) 872-9306
ATTN: Office of Petitions

Telephone inquiries concerning this decision should be directed to Wan Laymon at (703) 306-5685.[3]

Frances Hicks
Lead Petitions Examiner
Office of Petitions
Office of the Deputy Commissioner
for Patent Examination Policy

[3] Effective September 27, 2004, the phone number will be 571-272-3220.

UNITED STATES PATENT AND TRADEMARK OFFICE

Commissioner for Patents
United States Patent and Trademark Office
P.O. Box 1450
Alexandria, VA 22313-1450
www.uspto.gov

EDLIN SOLOMON
ST. SHAPIRA 5/3
RISHON LE ZION, 75284
ISRAEL

AIRMAIL

COPY MAILED

APR 2 7 2005

OFFICE OF PETITIONS

In re Application of :
Solomon Edlin :
Application No. 09/871,383 : ON PETITION
Filed: May 31, 2001 :
For: BIPOLAR STATIC INDUCTION :
TRANSISTOR (VARIANTS)

This is a decision on the petition under 37 CFR 1.137(b), filed October 22, 2004, to revive the above-identified application.

The petition is **DISMISSED**.

Any request for reconsideration of this decision must be submitted within TWO (2) MONTHS from the mail date of this decision. Extensions of time under 37 CFR 1.136(a) are permitted. The reconsideration request should include a cover letter entitled "Renewed Petition under 37 CFR 1.137(b)." Petitioner is advised that this is **not** a final agency action decision.

The above-identified application became abandoned for failure to reply in a timely manner to the Notice to File Missing Parts of Nonprovisional Application (Notice) mailed September 11, 2001. The Notice set a period for reply of two (2) months from the mail date of the Notice. A two (2) month extensions of time under the provisions of 37 CFR 1.136(a) were obtained.[1] Accordingly, the above-identified application became abandoned on February 12, 2002.

A grantable petition to revive an abandoned application under 37 CFR 1.137(b) must be accompanied by: (1) the required reply (unless previously filed), which may met by the filing of a continuing application in a nonprovisional application abandoned for failure to prosecute, but must be the payment of the issue fee or any outstanding balance thereof in an application or patent, abandoned or lapsed for failure to pay the issue fee or any portion thereof; (2) the petition fee as set

[1] The fee for a three (3) month extensions of time was $460 and petitioner paid $330.

forth in 37 CFR 1.17(m); (3) a statement that the entire delay in filing the required reply from the due date for the reply until the filing of a grantable petition pursuant to 37 CFR 1.137(b) was unintentional; and (4) any terminal disclaimer (and fee as set forth in 37 CFR 1.20(d)). This petition lacks item (2) above.

As to item (2), the fee for a petition to revive under the unintentional standard of 37 CFR 1.137(b) for a small entity is $685. There is no indication that petitioner has submitted any fee for a petition to revive. A review of the Office Financial records show that petitioner has tendered two separate checks for the late filing fee. The second check of $65 is unnecessary. In addition, petitioner requested for a three (3) month extensions of time. Since this application became abandoned on February 12, 2002, extension of time under 37 CFR 1.136 must be filed **prior** to the expiration of the maximum extendable period for reply. See In re Application of S., 8 USPQ2d 1630, 1631 (Comm'r Pats. 1988). Accordingly, the $475 extension of time submitted on September 14, 2004 and November 1, 2004 was subsequent to the maximum extendable period for reply. Therefore, the Office has applied $50 toward to the required processing for a returned check, $490 for the petition fee, which leaves an outstanding balance of $195. Accordingly, a consideration on the merits of the present petition cannot be made until the $195 fee deficiency is submitted to the Office.

Further correspondence with respect to this matter should be addressed as follows:

By mail: Mail Stop PETITIONS
Commissioner for Patents
Post Office Box 1450
Alexandria, VA 22313-1450

By hand: Customer Service Window
Randolph Building
401 Dulany Street
Alexandria, VA 22314

By fax: (703) 872-9306
ATTN: Office of Petitions

The file does not indicate a change of address has been submitted, although the address given on the petition differs from the address of record. If appropriate, a change of address should be filed in accordance with MPEP 601.03. A courtesy copy of this decision is being mailed to the address given on the petition;

however, the Office will mail all future correspondence solely to the address of record.

Telephone inquiries concerning this decision should be directed to Wan Laymon at (571) 272-3220.

Wan Laymon
Petitions Examiner
Office of Petitions
Office of the Deputy Commissioner
for Patent Examination Policy

cc: EDLIN SOLOMON
ST. ZVULON 14
ASHKELON 78565

AIRMAIL

UNITED STATES PATENT AND TRADEMARK OFFICE

Commissioner for Patents
United States Patent and Trademark Office
P.O. Box 1450
Alexandria, VA 22313-1450
www.uspto.gov

EDLIN SOLOMON
ST. SPRINZAK 1/18
RISHON LE ZION 75236 IL ISRAEL

COPY MAILED

JAN 25 2007

OFFICE OF PETITIONS

In re Application of	:	
SOLOMON EDLIN	:	
Application No. 09/871,383	:	DECISION ON PETITION
Filed: May 31, 2001	:	
Attorney Docket No. n/a	:	

This is a decision on the **renewed** petition under 37 CFR 1.137(b) filed on May 3, 2006 in the above-identified application.

The petition is **DISMISSED**.

The rules and statutory provisions governing the operations of the U.S. Patent and Trademark Office require payment of a fee on filing each petition to revive an abandoned application for patent based on unintentional delay or to accept an unintentionally delayed payment of a fee for issuing a patent. In this instance, the fee required by law is $1,500. If applicant can qualify as a "small entity" and does so prior to or together with the payment of the fee, the fee will be one-half of the amount indicated. See 37 CFR 1.27.

The petition in the above-identified application was not accompanied by payment of the required fee. No consideration on the merits can be given that petition until the required fee is received.

Petitioner submitted $490 with the earlier petition which was dismissed in the petition decision dated April 27, 2005 for failure to submit the required fee of $685. Currently, the fee to revive under 37 CFR 1.137(b) under small entity status is $750 (subject to change). Accordingly, a consideration on the merits of the present petition cannot be made until the $260 fee deficiency is submitted to the Office.

Any further delay in filing a grantable petition, i.e. submission of the required fees, may be construed as an intentional delay in reviving the above-identified application. Any such intentional delay may preclude the granting of a petition to revive an unintentionally abandoned application under 37 CFR 1.137(b).

The change of correspondence address filed on May 3, 2006 has been accepted, and the new correspondence address of record is the address indicated above.

Further correspondence with respect to this matter should be addressed as follows:

By mail: Mail Stop PETITIONS
Commissioner for Patents
Post Office Box 1450
Alexandria, VA 22313-1450

By hand: Customer Service Window
Mail Stop Petitions
Randolph Building
401 Dulany Street
Alexandria, VA 22314

By fax: (571) 273-8300
ATTN: Office of Petitions

Any questions concerning this matter may be directed to the undersigned at (571) 272-7414.

Amelia Au
Petitions Examiner
Office of Petitions

UNITED STATES PATENT AND TRADEMARK OFFICE

Commissioner for Patents
United States Patent and Trademark Office
P.O. Box 1450
Alexandria, VA 22313-1450
www.uspto.gov

Paper No. 5

LAW OFFICE OF LIAUH & ASSOC.
4224 WAIALAE AVE
STE 5-388
HONOLULU HI 96816

COPY MAILED
MAY 2 6 2004
OFFICE OF PETITIONS

In re Application of	:	
Tzu-Wen Liu et al.	:	
Application No. 09/871,398	:	ON PETITION
Filed: May 30, 2001	:	
Attorney Docket No. OR0108	:	

This is a decision on the petition filed March 29, 2004, under 37 CFR 1.137(a)[1] to revive the above-identified application, which is first treated as a petition to withdraw the holding of abandonment.

The petition is **dismissed**.

The application became abandoned on October 1, 2001, for failure to timely reply to the Notice to File Corrected Application Papers mailed on July 31, 2001, which set a two (2) month

[1]A grantable petition under 37 CFR 1.137(a) must be accompanied by:

(1) the required reply, unless previously filed; In a nonprovisional application abandoned for failure to prosecute, the required reply may be met by the filing of a continuing application. In a nonprovisional utility or plant application filed on or after June 8, 1995, and abandoned for failure to prosecute, the required reply may also be met by the filing of a request for continued examination in compliance with § 1.114. In an application or patent, abandoned or lapsed for failure to pay the issue fee or any portion thereof, the required reply must be the payment of the issue fee or any outstanding balance thereof.

(2) the petition fee as set forth in 37 CFR 1.17(l);

(3) a showing to the satisfaction of the Commissioner that the entire delay in filing the required reply from the due date for the reply until the filing of a grantable petition pursuant to 37 CFR 1.137(a) was unavoidable; and

(4) any terminal disclaimer (and fee as set forth in 37 CFR 1.20(d)) required pursuant to 37 CFR 1.137(c)).

shortened statutory period for reply. No extensions of the time for reply in accordance with 37 CFR 1.136(a) were obtained. A Notice of Abandonment was mailed on February 4, 2004.

Petitioners assert that the Notice mailed on July 31, 2001, was never received.

PETITION TO WITHDRAW THE HOLDING OF ABANDONMENT

Petitioners assert that the Notice mailed on July 31, 2001, was never received. A review of the record indicates no irregularity in the mailing of the Office action, and in the absence of any irregularity in the mailing, there is a strong presumption that the Office action was properly mailed to the address of record. This presumption may be overcome by a showing that the Office action was not in fact received. The showing required to establish the failure to receive an Office action must include a statement from the practitioner stating that the Office communication was not received by the practitioner and attesting to the fact that a search of the file jacket and docket records indicates that the Office communication was not received. A copy of the docket record where the non-received Office communication would have been entered had it been received and docketed must be attached to and referenced in practitioner's statement.[2] The showing outlined above may not be sufficient if there are circumstances that point to a conclusion that the Office action may have been lost after receipt rather than a conclusion that the Office action was lost in the mail (e.g. if the practitioner has a history of not receiving Office actions).

The showing of record is insufficient to warrant withdrawal of the holding of abandonment. Petitioners have not presented a copy of the docket record where the non-received Office communication would have been entered had it been received and docketed. Additionally, a statement from the practitioner stating that a search of the file jacket and docket records indicates that the Office communication in question was not received has not been provided. As the required showing has not been presented, the petition must be dismissed.

---

[2]M.P.E.P. § 711.03(c); See Notice entitled "Withdrawing the Holding of Abandonment When Office Actions Are Not Received," 1156 O.G. 53 (November 16, 1993).

REQUIREMENT FOR REPLY

A review of the record reveals that petitioner has not submitted the reply required by the Notice mailed on July 31, 2001. The Notice required that the claims must commence on a separate sheet pursuant to 37 CFR 1.175(h). Any renewed petition must be accompanied by petitioners' reply to the Notice mailed on July 31, 2001. A courtesy copy of the Notice has been included with this decision for assistance in preparing petitioners' reply.

PETITION UNDER 37 CFR 1.137(a)

The Commissioner may revive an abandoned application if the delay in responding to the relevant outstanding Office requirement is shown to the satisfaction of the Commissioner to be "unavoidable".[3] Decisions on reviving abandoned applications on the basis of "unavoidable" delay have adopted the reasonably prudent person standard in determining if the delay was unavoidable:

> The word 'unavoidable' . . . is applicable to ordinary human affairs, and requires no more or greater care or diligence than is generally used and observed by prudent and careful men in relation to their most important business. It permits them in the exercise of this care to rely upon the ordinary and trustworthy agencies of mail and telegraph, worthy and reliable employees, and such other means and instrumentalities as are usually employed in such important business. If unexpectedly, or through the unforeseen fault or imperfection of these agencies and instrumentalities, there occurs a failure, it may properly be said to be unavoidable, all other conditions of promptness in its rectification being present.[4]

---

[3] 35 U.S.C. § 133.

[4] In re Mattullath, 38 App. D.C. 497, 514-15 (1912)(quoting Ex parte Pratt, 1887 Dec. Comm'r Pat. 31, 32-33 (1887)); see also Winkler v. Ladd, 221 F. Supp. 550, 552, 138 USPQ 666, 167-68 (D.D.C. 1963), aff'd, 143 USPQ 172 (D.C. Cir. 1963); Ex parte Henrich, 1913 Dec. Comm'r Pat. 139, 141 (1913). In addition, decisions on revival are made on a "case-by-case basis, taking all the facts and circumstances into account." Smith v. Mossinghoff, 671 F.2d 533, 538, 213 USPQ 977, 982 (D.C. Cir. 1982). Finally, a petition cannot be granted where a petitioner has failed to meet his or her burden of establishing that the delay was "unavoidable." Haines v. Quigg, 673 F. Supp. 314, 316-17, 5 USPQ2d 1130, 1131-32 (N.D. Ind. 1987).

The showing of record is inadequate to establish unavoidable delay within the meaning of 35 U.S.C. § 133 and 37 CFR 1.137(a).[5] Specifically, an application is "unavoidably" abandoned only where petitioner, or counsel for petitioner, takes all action necessary for a proper response to the outstanding Office action, but through the intervention of unforeseen circumstances, such as failure of mail, telegraph, facsimile, or the negligence of otherwise reliable employees, the response is not timely received in the Office.[6]

As petitioners have provided no showing of evidence to satisfy the requirements of a grantable petition under 37 CFR 1.137(a), the petition will be dismissed.

ALTERNATIVE VENUE

Petitioners may wish to consider filing a renewed petition under 37 CFR 1.137(b), which now provides that where the delay in reply was unintentional, a petition may be filed to revive an abandoned application or a lapsed patent pursuant to 37 CFR 1.137(b). A grantable petition pursuant to 37 CFR 1.137(b) must be accompanied by:

(1) the required reply, unless previously filed. In a nonprovisional application abandoned for failure to prosecute, the required reply may be met by the filing of a continuing application. In a nonprovisional utility or plant application filed on or after 8 June, 1995, and abandoned for failure to prosecute, the required reply may also be met by the filing of a request for continued examination in compliance with § 1.114. In an application or patent, abandoned or lapsed for failure to pay the issue fee or any portion thereof, the required reply must be the payment of the issue fee or any outstanding balance thereof.

(2) the petition fee as set forth in 37 CFR 1.17(m);

(3) a statement that the entire delay in filing the required reply from the due date for the reply until the filing of a grantable petition pursuant to 37 CFR 1.137(b) was unintentional. The Commissioner may required additional information where there is a question whether the delay was unintentional; and

---

[5] See MPEP 711(c)(III)(C)(2) for a discussion of the requirements for a showing of unavoidable delay.

[6] Ex parte Pratt, 1887 Dec. Comm'r Pat. 31 (Comm'r Pat. 1887).

(4) any terminal disclaimer (and fee as set forth in 37 CFR 1.20(d)) required pursuant to 37 CFR 1.137(c)).

The filing of a petition under the unintentional standard cannot be intentionally delayed and therefore should be filed promptly. A person seeking revival due to unintentional delay cannot make a statement that the delay was unintentional unless the entire delay, including the delay from the date it was discovered that the application was abandoned until the filing of the petition to revive under 37 CFR 1.137(b), was unintentional. A statement that the delay was unintentional is not appropriate if petitioner intentionally delayed the filing of a petition for revival under 37 CFR 1.137(b).

Should petitioners decide to file a petition under 37 CFR 1.137(b), the additional petition fee due is currently $665.00 (small entity).

Further correspondence with respect to this matter should be addressed as follows and to the attention of Senior Petitions Attorney Christina Tartera Donnell:

By mail: Commissioner for Patents
Mail Stop Petitions
PO Box 1450
Alexandria, VA 22313-1450

By FAX: (703) 872-9306
Attn: Office of Petitions

By hand: 2011 South Clark Place
Customer Window
Crystal Plaza Two, Lobby, Room 1B03
Arlington, VA

Any inquiries should be directed to the undersigned at (703) 306-5589.

Christina Tartera Donnell

Christina Tartera Donnell
Senior Petitions Attorney
Office of Petitions

Encls: Office action mailed on
Privacy Act Notification

UNITED STATES PATENT AND TRADEMARK OFFICE

Commissioner for Patents
United States Patent and Trademark Office
P.O. Box 1450
Alexandria, VA 22313-1450
www.uspto.gov

Paper No. 8

LAW OFFICE OF LIAUH & ASSOC.
4224 WAIALAE AVE
STE 5-388
HONOLULU HI 96816

COPY MAILED

FEB 04 2005

OFFICE OF PETITIONS

In re Application of :
Tzu-Wen Liu et al. :
Application No. 09/871,398 : ON PETITION
Filed: May 30, 2001 :
Attorney Docket No. ORO108 :

This is a decision on the renewed petition filed December 23, 2004, under 37 CFR 1.137(a) to revive the above-identified application.

The application became abandoned on October 1, 2001, for failure to timely reply to the Notice to File Corrected Application Papers mailed on July 31, 2001, which set a two (2) month shortened statutory period for reply. No extensions of the time for reply in accordance with 37 CFR 1.136(a) were obtained. A Notice of Abandonment was mailed on February 4, 2004.

Petitioner has met the requirements under 37 CFR 1.137(a).

Accordingly, the petition is granted.

The application file is being forwarded to the Office of Initial Patent Examination for further processing.

Any inquiries should be directed to the undersigned at (571) 272-3211.

Christina Tartera Donnell

Christina Tartera Donnell
Senior Petitions Attorney
Office of Petitions

UNITED STATES PATENT AND TRADEMARK OFFICE

Commissioner for Patents
United States Patent and Trademark Office
P. O. Box 1450
Alexandria, VA 22313-1450
www.uspto.gov

Paper No. 9

O'KEEFE EGAN & PETERMAN LLP
BUILDING C, SUITE 200
1101 CAPITAL OF TEXAS HIGHWAY SOUTH
AUSTIN, TX 78746

COPY MAILED

SEP 1 5 2003

OFFICE OF PETITIONS

In re Application of	:
Scott C. Johnson, et al.	:DECISION ON PETITIONS
Application No. 09/871,401	:UNDER 37 CFR 1.181; 37
Filed: May 31, 2001	:CFR 1.183 AND 37 CFR
Attorney Docket No. SURG:157	:1.137(b)

This is a decision on the papers titled "Petition Concerning Notice of Foreign Filing a Foreign Application of a U.S. Patent Application For Which A Nonpublication Request Was Rescinded Under 35 USC 122(b)(2), " filed August 22, 2003. The petition is being treated as a petition under 37 CFR 1.181, 37 CFR 1.183, and 37 CFR 1.137(b).

The petition under 37 CFR 1.181 is **DISMISSED.**

The petition under 37 CFR 1.183 is **DISMISSED.**

The petition under 37 CFR 1.137(b) is **GRANTED**.

BACKGROUND

The above-identified application was filed on May 31, 2001. With the filing, applicants included a Request and Certification under 35 U.S.C. 122(b)(2)(B)(i) requesting that the application not be published. The nonpublication request reads:

> I hereby certify that the invention disclosed in the attached application **has not been and will not be** the subject of an application filed in another country, or under a multilateral agreement, that requires publication at eighteen months after filing. I hereby request that the attached application not be published under 35 U.S.C. 122(b). [Emphasis applicants.]

On November 2, 2001, applicants filed a counterpart international application relating to the subject matter of the above-identified application. Applicants provided the notice of the foreign filing as required by 35 U.S.C. § 122(b)(2)(B)(iii) and 37 CFR 1.213(c) when applicants filed this petition on August 22, 2003.

On January 3, 2002, applicants filed a Request to Rescind Nonpublication Request (35 U.S.C. § 122(b)(2)(B()(ii)), which bears a certificate of mailing date under 37 CFR 1.8 of October 18, 2001. This request stated that "I hereby rescind the previous request that the above-identified application not be published under 35 U.S.C. 122(b)." The rescission request does not make any mention of the fact that this application is, has been or will be the subject of an application filed in another country, or under a multilateral agreement, that requires publication at eighteen months after filing.

On August 22, 2003, applicants filed the instant petition and stated that the invention disclosed in the above-identified application was filed in a foreign country on November 2, 2001. From these dates, the notice of the foreign filing as required by 35 U.S.C. 122(b)(2)(B(iii) was not filed within 45 days after the date of filing of the international application.

STATUTE AND LEGISLATIVE HISTORY

35 U.S.C. (b)(2)(B) states, in pertinent part:

> (i) If an applicant makes a request upon filing, certifying that the invention disclosed in the application has not and will not be the subject of an application filed in another country, or under a multilateral international agreement, that requires publication of applications 18 months after filing, the application shall not be published as provided in paragraph (1).
>
> (ii) **An applicant may rescind a request made under clause (i) at any time.**
>
> (iii) An applicant who has made a request under clause (i) but who subsequently files, in a foreign country or under a multilateral international agreement specified in clause (i), an application directed to the invention disclosed in the application filed in the Patent and Trademark Office, shall

> notify the Director of such filing not later than 45 days after the date of the filing of such foreign or international application. **A failure of the applicant to provide such notice within the prescribed period shall result in the application being regarded as abandoned**, unless it is shown to the satisfaction of the Director that the delay in submitting the notice was unintentional.
>
> (iv) If an applicant rescinds a request made under clause (i) **or** notifies the Director that an application was filed in a foreign country or under a multilateral international agreement specified in clause (i), the application shall be published in accordance with the provisions of paragraph (1) on or as soon as is practical after the date that is specified in clause (i).[1]

The Congressional record explains that, if applicant has requested nonpublication because the application will not be filed "in a foreign country with a publication requirement, subparagraph (B)(iii) imposes a duty on the applicant to notify the Director of this fact. An unexcused failure to notify the Director will result in abandonment of the application." See 145 Cong. Rec. S14,718 (November 17, 1999).

PETITIONS UNDER 37 CFR 1.181 AND 1.183

Requested Relief under 37 CFR 1.181

As to the petition under **37 CFR 1.181**, applicants have requested that the foreign application filed by transmittal of PCT Application Serial No. PCT/US01/45838 by Express Mail on November 2, 2001, which included information identifying the above-captioned application by title, inventors, filing date and application number, be regarded as satisfying the notification of foreign filing requirements of 35 U.S.C. § 122(b)(2)(B)(iii).

Decision on Petition under 37 CFR 1.181

The argument that the filing of the PCT application satisfied the notification requirement of 35 U.S.C. § 122(b)(2)(B)(iii) of foreign filing is not persuasive. 37 CFR 1.213(c) requires the applicant to provide notice, and 37 CFR 1.4(b)

---

[1] Emphasis added.

provides that each application must be complete in itself. An international application would not be placed into the file of an application that it relies upon for the benefit of an earlier filing date, and so applicant was required to file a separate paper pursuant to 37 CFR 1.4(b) in the above-identified application. Therefore, the mere filing of a PCT application is not the notification required by 35 U.S.C. § 122(b)(2)(B)(iii) and 37 CFR 1.213(c). Petitioner's attention is also directed to 37 CFR 1.4(c), which states:

> Since different matters may be considered by different branches or sections of the United States Patent and Trademark Office, each distinct subject, inquiry or order must be contained in a separate paper to avoid confusion and delay in answering papers dealing with different subjects.

Pursuant to 37 CFR 1.4(c), the separate paper was required to address a distinct subject. Therefore, since a notification of foreign filing was required to be on a separate paper, the filing of the PCT application did not serve as the notification of foreign filing required by 35 U.S.C. § 122(b)(2)(B)(iii). It should be noted that the USPTO acts in a distinctly separate capacity, and in a dedicated, separate part of the Office, when it acts as a Receiving Office for the filing of applications and papers under the PCT. Accordingly, as a review of the contents of the file of the above-identified application shows that no notification of the November 2, 2001 filing of the PCT application was filed within 45 days after the filing date of the PCT application, applicants' failure to provide such timely notice of the filing of the PCT application, pursuant to 35 U.S.C. § 122(b)(2)(B)(iii) and 37 CFR 1.213(c), caused the above-identified application to become abandoned by operation of law at midnight December 17, 2001.

Requested Relief under 37 CFR 1.183

Alternatively, applicants request suspension of the rules under **37 CFR 1.183** if the Office finds that the filing of the PCT application does not satisfy the notification of foreign filing requirements of 35 U.S.C. § 122(b)(2)(B)(iii). In this regard, applicants contend that, despite the fact that the request to rescind the nonpublication request was mailed via certificate of mailing 15 days (i.e., on October 18, 2001 prior to the filing of the PCT application on November 2, 2001, the request to rescind was not processed and stamped by the USPTO until January 3, 2002, 77 days after the mailing of the request. With regard to the period during which the mails were delayed due to the anthrax discovery, applicants make reference to a notice published in the Official Gazette with

regard to the postal service delays caused by increased security procedures related to the discovery of anthrax in a Washington, D.C. mail facility and requests like relief with regard to the request to rescind the nonpublication request received on January 3, 2002 in the USPTO.

Decision on Petition under 37 CFR 1.183

As noted above, the request to rescind the nonpublication request was mailed via certificate of mailing under 37 CFR 1.8 on October 18, 2001, which was not received and stamped into the USPTO until January 3, 2002, due to mail delays. However, the relief provided for by the notice published in the Official Gazette of October 9, 2001, applies only to correspondence deposited by Express Mail under 37 CFR 1.10 and does not apply to mail deposited by first class mail under 37 CFR 1.8. In this regard, applicants' attention is directed to 1251 Official Gazette 55, which states:

> Parties submitting correspondence to the USPTO are reminded that 37 CFR 1.8 (certificate of mailing or transmission practice) does not provide for according a filing date as of the date of deposit with the USPS to correspondence submitted under 37 CFR 1.8. Therefore, it would be inappropriate to file a petition under 37 CFR 1.183 or 2.146(a)(5) and 2.148 to waive the requirements of 37 CFR 1.8.

In view of the above, applicants cannot rely on the notice published in the Official Gazette as a means for the requested relief under 37 CFR 1.183.

Moreover, the Notice published in the Official Gazette of July 1, 2003 (1272 Official Gazette 1), regarding the USPTO's clarification and interpretation of the provisions of 35 U.S.C. 122(b)(2)(B)(ii)-(iv), stated, in pertinent part under "In Summary:"

> (3) If an applicant makes a nonpublication request and subsequently files a counterpart application in an eighteen-month publication country before the nonpublication request is rescinded, 35 U.S.C. 122(b)(2)(B)(iii) requires the applicant to notify the USPTO of the foreign filing not later than forty-five days after the date such counterpart application was filed to avoid abandonment of the application.
> (4) When an application is abandoned by operation of 35 U.S.C.

> 122(b)(2)(B)(iii) due to the failure to timely notify the USPTO of the filing of a counterpart application in an eighteen-month publication country, applicant's sole remedy to restore the application to pending status is by filing a petition under 37 CFR 1.137(b) to revive the abandoned application.
> (5) Applicants should also provide a notice of foreign filing when rescinding a nonpublication request in anticipation of filing a counterpart application in an eighteen-month publication country because no benefit is given to a certificate of mailing or transmission under 37 CFR 1.8 on a rescission of a nonpublication request in determining whether applicant has rescinded the nonpublication request before or on the date a counterpart application is filed in an eighteen-month publication country.

Here, applicants' request to rescind the nonpublication request was mailed via certificate of mailing practice under 37 CFR 1.8, to which no benefit can be given. Further, since the request to rescind was not received in the USPTO until January 3, 2002, and the request did not provide any notice of foreign filing, compliance with 35 U.S.C. § 122(b)(2)(B)(iii) has not been satisfied. The Office has no authority pursuant to 37 CFR 1.183 to treat a rescission under 35 U.S.C. § 122(b)(2)(ii) as the notice of foreign filing required by 35 U.S.C. § 122(b)(2)(B)(iii). In addition, the Office has no authority to waive the 45 day period set forth in 35 U.S.C. § 122(b)(2)(B)(iii). As a result thereof, the application must be regarded as abandoned by operation of law. These are statutory requirements and a statutory requirement cannot be waived under the provisions of 37 CFR 1.183.

Moreover, as noted in item (4), applicants herein have a suitable remedy on hand that does not require the extraordinary remedy of invoking 37 CFR 1.183. It is brought to petitioner's attention that the USPTO will not normally consider an extraordinary remedy when the rules already provide an avenue for obtaining the relief sought. See Cantello v. Rasmussen, 220 USPQ 664 (Comm'r Pat. 1982). Furthermore, a standard principle of statutory construction is: *expressio unius est exclusion alterius* (the mention of one thing implies exclusion of another thing); namely, absent legislative intent to the contrary, when a statute expressly provides a specific remedy for a specific situation, the statute is deemed to exclude other remedies for such situation. See National R.R. Passenger Corp. v. National Ass'n Of R.R. Passengers, 414 U.S. 453, 458 (1974); see also Botany Worsted Mills v. United States, 278 U.S.

282, 289 (1929)("when a statute limits a thing to be done in a particular mode, it includes the negative of any other mode"). Since Congress has provided in Public Laws 97-247 and 106-103 specific schemes for the revival of abandoned applications (*i.e.*, the specific situations under which the PTO may revive an abandoned application and the specific requirements (fee amounts and standards) applicable to each specific situation), the creation of other schemes (e.g., the herein requested waiver of the rules under 37 CFR 1.183) for the revival of any abandoned application would be inconsistent with the patent statute. Thus, the Commissioner's authority to revive an abandoned application is limited to that specified in the statutory scheme set forth in 35 U.S.C. §§ 41(a)(7), 111, 122, 133, and 151. See Morganroth v. Quigg, 885 F.2d 843, 847, 12 USPQ2d 1125, 1128 (Fed. Cir. 1989)(the Commissioner lacks the authority to revive an application abandoned by termination of court proceedings because 35 U.S.C. §§ 41(a)(7), 133, or 151 do not provide for the revival of an application abandoned in such a manner).

PETITION UNDER 37 CFR 1.137(b)

Alternatively, applicants request revival of the instant application pursuant to the provisions of 37 CFR 1.137(b) for failure to timely notify the U.S. Patent and Trademark (USPTO) of the filing of an application in a foreign country, or under a multinational treaty that requires publication of applications eighteen months after filing. *See* 37 CFR 1.137(f).

Decision on Petition under 37 CFR 1.137(b)

As noted above, applicants stated in the petition that the instant nonprovisional application is the subject of a counterpart international application filed on November 2, 2001. However, the US Patent and Trademark Office was unintentionally not notified of this filing within 45 days subsequent to the filing of the international application.

In view of the above, this application became abandoned pursuant to 35 U.S.C. 122(b)(2)(B)(iii) and 37 CFR 1.213(c) for failure to timely notify the Office of the filing of an application in a foreign country, or under a multilateral international agreement, that requires publication of applications 18 months after filing.

A petition under 37 CFR 1.137(f) must be accompanied by:

(1) the reply, which is met by the notification of such filing in a foreign country or under a multinational treaty;
(2) the petition fee as set forth in 37 CFR 1.17(m); and

(3) a statement that the entire delay in filing the required reply from the due date of the reply until the filing of a grantable petition was unintentional.

The instant petition has been found to be in compliance with 37 CFR 1.137(f). Accordingly, the failure to timely notify the Office of a foreign or international filing within 45 days after the date of filing of such foreign or international application as provided by 35 U.S.C. § 122(b)(2)(B)(iii) and 37 CFR 1.213(c) is accepted as having been unintentionally delayed.

Telephone inquiries regarding this decision should be directed to Sherry Brinkley at (703) 305-9220.

This application is being forwarded to Technology Center 2100 for examination in due course.

Frances Hicks for
Brian Hearn
Senior Petitions Examiner
Office of Petitions
Office of the Deputy Commissioner
for Patent Examination Policy

UNITED STATES PATENT AND TRADEMARK OFFICE

UNITED STATES DEPARTMENT OF COMMERCE
United States Patent and Trademark Office
Address: COMMISSIONER FOR PATENTS
P.O. Box 1450
Alexandria, Virginia 22313-1450
www.uspto.gov

January 30, 2004

Michael W. Garvey
Pearne & Gordon
1801 East 9th St.
Suite 1200
Cleveland, OH 44114-3108

In re application of:
Eugene C. Nelson et al
Serial No.: 09/871,420
Filed: May 31, 2001

DECISION ON PETITION

For: INTEGRATED COMMUNICATION SYSTEM AND METHOD

This is a decision on the petition received on November 10, 2003, to withdraw the holding of abandonment in the above-identified application.

The above-identified application became abandoned for failure to reply within the meaning of 37 C.F.R. 1.113 in timely manner to the Notice to File Missing Parts of Application mailed August 3, 2001. Which set a shortened statutory period for reply of two (2) months. Accordingly, this application became abandoned October 4, 2001. A notice of abandonment was mailed on October 30, 2003.

On November 10, 2003, the office received a communication from the attorney of record. Enclosed was an acknowledgment that the attorney responded to the Notice to File Missing Parts on August 10, 2001.

The evidence submitted is sufficient to establish that the petitioners responded to the Notice to File Missing Parts on August 10, 2001.

The petition is hereby GRANTED.

The application has been completed for release to Technology Center 2166.

Telephone inquiries concerning this matter may be directed to Doshie E. Day at (703) 308-3640.

Doshie Day

Doshie E. Day
Program Management Assistant
Office Initial Patent Examination

UNITED STATES PATENT AND TRADEMARK OFFICE

UNITED STATES DEPARTMENT OF COMMERCE
United States Patent and Trademark Office
Address: COMMISSIONER FOR PATENTS
P.O. Box 1450
Alexandria, Virginia 22313-1450
www.uspto.gov

January 30, 2004

Michael W. Garvey
Pearne & Gordon
1801 East 9th St.
Suite 1200
Cleveland, OH 44114-3108

In re application of:
Eugene C. Nelson et al
Serial No.: 09/871,420
Filed: May 31, 2001

DECISION ON PETITION

For: INTEGRATED COMMUNICATION SYSTEM AND METHOD

This is a decision on the petition received on November 10, 2003, to withdraw the holding of abandonment in the above-identified application.

The above-identified application became abandoned for failure to reply within the meaning of 37 C.F.R. 1.113 in timely manner to the Notice to File Missing Parts of Application mailed August 3, 2001. Which set a shortened statutory period for reply of two (2) months. Accordingly, this application became abandoned October 4, 2001. A notice of abandonment was mailed on October 30, 2003.

On November 10, 2003, the office received a communication from the attorney of record. Enclosed was an acknowledgment that the attorney responded to the Notice to File Missing Parts on August 10, 2001.

The evidence submitted is sufficient to establish that the petitioners responded to the Notice to File Missing Parts on August 10, 2001.

The petition is hereby GRANTED.

The application has been completed for release to Technology Center 2166.

Telephone inquiries concerning this matter may be directed to Doshie E. Day at (703) 308-3640.

Doshie Day

Doshie E. Day
Program Management Assistant
Office Initial Patent Examination

UNITED STATES PATENT AND TRADEMARK OFFICE

Commissioner for Patents
United States Patent and Trademark Office
P.O. Box 1450
Alexandria, VA 22313-1450
www.uspto.gov

3M INNOVATIVE PROPERTIES COMPANY
P O BOX 33427
ST PAUL MN 55133-3427

COPY MAILED

AUG 1 0 2004

OFFICE OF PETITIONS

In re Application of
Todd R. Williams et al
Application No. 09/871,421
Filed: May 31, 2001
Attorney Docket No. 56523USA1A.002

DECISION GRANTING PETITION
UNDER 37 CFR 1.313(c)(2)

This is a decision on the petition, filed July 27, 2004, under 37 CFR 1.313(c)(2) to withdraw the above-identified application from issue after payment of the issue fee.

The petition is **GRANTED**.

The above-identified application is withdrawn from issue for consideration of a submission under 37 CFR 1.114 (request for continued examination). See 37 CFR 1.313(c)(2).

Petitioner is advised that the issue fee paid on March 4, 2004 in the above-identified application cannot be refunded. If, however, the above-identified application is again allowed, petitioner may request that it be applied towards the issue fee required by the new Notice of Allowance.[1]

Telephone inquiries should be directed to the undersigned at (703) 305-8680.

This matter is being referred to Technology Center AU 1762 for processing of the request for continued examination under 37 CFR 1.114 and for consideration of the concurrently filed Information Disclosure Statement.

Frances Hicks
Petitions Examiner
Office of Petitions
Office of the Deputy Commissioner
for Patent Examination Policy

---

[1] The request to apply the issue fee to the new Notice may be satisfied by completing and returning the new Issue Fee Transmittal Form PTOL-85(b), which includes the following language thereon: "Commissioner for Patents is requested to apply the Issue Fee and Publication Fee (if any) or re-apply any previously paid issue fee to the application identified above." Petitioner is advised that, whether a fee is indicated as being due or not, the Issue Fee Transmittal Form **must** be completed and timely submitted to avoid abandonment. Note the language in bold text on the first page of the Notice of Allowance and Fee(s) Due (PTOL-85).

UNITED STATES PATENT AND TRADEMARK OFFICE

Commissioner for Patents
United States Patent and Trademark Office
P.O. Box 1450
Alexandria, VA 22313-1450
www.uspto.gov

COPY MAILED

JUN 30 2005

OFFICE OF PETITIONS

CHARLES G. CALL
68 HORSE POND ROAD
WEST YARMOUTH MA 02673-2516

In re Application of	:	
Alok Srivastava et al	:	
Application No. 09/871,440	:	DECISION GRANTING PETITION
Filed: May 31, 2001	:	UNDER 37 CFR 1.137(b)
Attorney Docket No. A-012	:	

This is a decision on the petition under 37 CFR 1.137(b), filed April 10, 2005, to revive the above-identified application.

The petition is **GRANTED**.

The petition satisfies the conditions for revival pursuant to the provisions of 37 CFR 1.137(b) in that (1) the reply in the form of an amendment; (2) the petition fee; and (3) the required statement of unintentional delay have been received. Accordingly, the reply to the nonfinal Office action of September 2, 2004, is accepted as having been unintentionally delayed.

Telephone inquiries concerning this decision should be directed to the undersigned at (571) 272-3208.

This matter is being referred to Technology Center AU 2143.

Karen Creasy

Karen Creasy
Petitions Examiner
Office of Petitions
Office of the Deputy Commissioner
for Patent Examination Policy

UNITED STATES PATENT AND TRADEMARK OFFICE

Commissioner for Patents
United States Patent and Trademark Office
P.O. Box 1450
Alexandria, VA 22313-1450
www.uspto.gov

CHARLES G. CALL
215 W. HURON ST APT 2
CHICAGO IL 60610-3331

COPY MAILED

JAN 1 1 2008

OFFICE OF PETITIONS

In re Application of :
Alok Srivastava et al. :
Application No. 09/871,440 :
Filed: May 31, 2001 :
Attorney Docket No.A-012 :

ON PETITION

This is a decision on the petition under 37 CFR 1.137(b), filed September 1, 2006, to revive the above-identified application.

The petition is **GRANTED**.

The above-identified application became abandoned for failure to submit a proper response to the final office action mailed February 9, 2006, which set a shortened statutory period for reply of three (3) months. Accordingly, by operation of law, the above-identified application became abandoned on May 10, 2006.

The petition satisfies the conditions for revival pursuant to the provisions of 37 CFR 1.137(b) in that (1) the reply in the form of a Notice of Appeal and Appeal Brief (2) the petition fee of $1500; and (3) the required statement of unintentional delay have been received.

It is not apparent whether the person signing the statement of the unintentional delay was in a position to have firsthand knowledge of the facts and circumstances of the delay at issue. Nevertheless, such statement is being treated as having been made as the result of a reasonable inquiry into the facts and circumstances of such delay. See 37 CFR 10.18(b) and Changes to Patent Practice and Procedure; Final rule Notice, 62 Fed. Reg. 53131, 53178 (October 10, 1997), 1203 Off. Gaz. Pat. Office 63, 103 (October 21, 1997). In the event that such an inquiry has not been made, petitioner must make such an inquiry. If such inquiry results in the discovery that it is not correct that the entire delay in filing the required reply from the due date for the reply until the filing of a grantable petition pursuant of 37 CFR 1.137(b) was unintentional, petitioner must notify the Office.

The file does not indicate a change of address has been submitted, although the address given on the petition differs from the address of record. If appropriate, a change of address should be filed in accordance with MPEP 601.03. A courtesy copy of this decision is being mailed to the address given on the petition; however, the office will mail all future correspondence solely to the address of record.

Telephone inquiries concerning this decision should be directed to Carl Friedman at (571) 272-6842.

The application file is being referred to the Board of Patent Appeals and Interferences.

David Bucci
Petitions Examiner
Office of Petitions

Cc: Charles G. Call
68 Horse Pond Road
West Yarmouth, MA
02673-2516

PTO/SB/66 (03-09)
Approved for use through 03/31/2012. OMB 0651-0016
U.S. Patent and Trademark Office: U.S. DEPARTMENT OF COMMERCE
Under the Paperwork Reduction Act of 1995, no persons are required to respond to a collection of information unless it displays valid OMB control number.

PETITION TO ACCEPT UNINTENTIONALLY DELAYED PAYMENT OF MAINTENANCE FEE IN AN EXPIRED PATENT (37 CFR 1.378(c))

Patent Number	Issue Date (YYYY-MM-DD)	Application Number	Filing Date (YYYY-MM-DD)	Docket Number (if applicable)
6887862	2005-05-03	09/871,441	2001-05-31	

CAUTION: Maintenance fee (and surcharge, if any) payment must correctly identify: (1) the patent number and (2) the application number of the actual U.S. application leading to issuance of that patent to ensure the fee(s) is/are associated with the correct patent. 37 CFR 1.366(c) and (d).

SMALL ENTITY
☒ Patentee claims, or has previously claimed, small entity status. See 37 CFR 1.27.

LOSS OF ENTITLEMENT TO SMALL ENTITY STATUS
☐ Patentee is no longer entitled to small entity status. See 37 CFR 1.27(g)

NOT Small Entity		Small Entity	
Fee	Code	Fee	Code
○ 3 ½ year	(1551)	◉ 3 ½ year	(2551)
○ 7 ½ year	(1552)	○ 7 ½ year	(2552)
○ 11 ½ year	(1553)	○ 11 ½ year	(2553)

SURCHARGE
The surcharge required by 37 CFR 1.20(i)(2) (Fee Code 1558) must be paid as a condition of accepting unintentionally delayed payment of the maintenance fee.

MAINTENANCE FEE (37 CFR 1.20(e)-(g))
The appropriate maintenance fee must be submitted with this petition.

STATEMENT
THE UNDERSIGNED CERTIFIES THAT THE DELAY IN PAYMENT OF THE MAINTENANCE FEE TO THIS PATENT WAS UNINTENTIONAL

PETITIONER(S) REQUEST THAT THE DELAYED PAYMENT OF THE MAINTENANCE FEE BE ACCEPTED AND THE PATENT REINSTATED

THIS PORTION MUST BE COMPLETED BY THE SIGNATORY OR SIGNATORIES

37 CFR 1.378(d) states: "Any petition under this section must be signed by an attorney or agent registered to practice before the Patent and Trademark Office, or by the patentee, the assignee, or other party in interest."

I certify, in accordance with 37 CFR 1.4(d)(4) that I am

○ An attorney or agent registered to practice before the Patent and Trademark Office

○ A sole patentee

○ A joint patentee; I certify that I am authorized to sign this submission on behalf of all the other patentees.

○ A joint patentee; all of whom are signing this e-petition

◉ The assignee of record of the entire interest

The Assignee of record of the entire interest			
Under 37 CFR 3.71 an assignee becomes of record by filing a statement in compliance with 37 CFR 3.73(b). Signature requirements are set forth in 37 CFR 1.4(d), and the undersigned certifies that he / she is empowered to act on behalf of the assignee of the entire interest			
Signature	/Michael Khoury/	Date (YYYY-MM-DD)	2010-05-10
Name	Michael Khoury		
Enter Reel and Frame Number		Remove	
Reel Number	012449	Frame Number	0511
Click ADD for additional Reel Number and Frame Number		Add	

This collection of information is required by 37 CFR 1.378(c). The information is required to obtain or retain a benefit by the public which is to file (and by the USPTO to process) an application. Confidentiality is governed by 35 U.S.C. 122 and 37 CFR 1.11 and 1.14. This collection is estimated to take 1 hour to complete, including gathering, preparing, and submitting the completed application form to the USPTO. Time will vary depending upon the individual case. Any comments on the amount of time you require to complete this form and/ or suggestions for reducing this burden, should be sent to the Chief Information Officer, U.S. Patent and Trademark Office, U.S. Department of Commerce, P.O. Box 1450, Alexandria, VA 22313-1450. DO NOT SEND FEES OR COMPLETED FORMS TO THIS ADDRESS. **This form can only be used when in conjunction with EFS-Web. If this form is mailed to the USPTO, it may cause delays in reinstating the patent.**

Privacy Act Statement

The Privacy Act of 1974 (P.L. 93-579) requires that you be given certain information in connection with your submission of the attached form related to a patent application or patent. Accordingly, pursuant to the requirements of the Act, please be advised that: (1) the general authority for the collection of this information is 35 U.S.C. 2(b)(2); (2) furnishing of the information solicited is voluntary; and (3) the principal purpose for which the information is used by the U.S. Patent and Trademark Office is to process and/or examine your submission related to a patent application or patent. If you do not furnish the requested information, the U.S. Patent and Trademark Office may not be able to process and/or examine your submission, which may result in termination of proceedings or abandonment of the application or expiration of the patent.

The information provided by you in this form will be subject to the following routine uses:

1. The information on this form will be treated confidentially to the extent allowed under the Freedom of Information Act (5 U.S.C. 552) and the Privacy Act (5 U.S.C. 552a). Records from this system of records may be disclosed to the Department of Justice to determine whether the Freedom of Information Act requires disclosure of these records.

2. A record from this system of records may be disclosed, as a routine use, in the course of presenting evidence to a court, magistrate, or administrative tribunal, including disclosures to opposing counsel in the course of settlement negotiations.

3. A record in this system of records may be disclosed, as a routine use, to a Member of Congress submitting a request involving an individual, to whom the record pertains, when the individual has requested assistance from the Member with respect to the subject matter of the record.

4. A record in this system of records may be disclosed, as a routine use, to a contractor of the Agency having need for the information in order to perform a contract. Recipients of information shall be required to comply with the requirements of the Privacy Act of 1974, as amended, pursuant to 5 U.S.C. 552a(m).

5. A record related to an International Application filed under the Patent Cooperation Treaty in this system of records may be disclosed, as a routine use, to the International Bureau of the World Intellectual Property Organization, pursuant to the Patent Cooperation Treaty.

6. A record in this system of records may be disclosed, as a routine use, to another federal agency for purposes of National Security review (35 U.S.C. 181) and for review pursuant to the Atomic Energy Act (42 U.S.C. 218(c)).

7. A record from this system of records may be disclosed, as a routine use, to the Administrator, General Services, or his/her designee, during an inspection of records conducted by GSA as part of that agency's responsibility to recommend improvements in records management practices and programs, under authority of 44 U.S.C. 2904 and 2906. Such disclosure shall be made in accordance with the GSA regulations governing inspection of records for this purpose, and any other relevant (i.e., GSA or Commerce) directive. Such disclosure shall not be used to make determinations about individuals.

8. A record from this system of records may be disclosed, as a routine use, to the public after either publication of the application pursuant to 35 U.S.C. 122(b) or issuance of a patent pursuant to 35 U.S.C. 151. Further, a record may be disclosed, subject to the limitations of 37 CFR 1.14, as a routine use, to the public if the record was filed in an application which became abandoned or in which the proceedings were terminated and which application is referenced by either a published application, an application open to public inspections or an issued patent.

9. A record from this system of records may be disclosed, as a routine use, to a Federal, State, or local law enforcement agency, if the USPTO becomes aware of a violation or potential violation of law or regulation.

UNITED STATES PATENT AND TRADEMARK OFFICE

Commissioner for Patents
United States Patent and Trademark Office
P.O. Box 1450
Alexandria, VA 22313-1450
www.uspto.gov

In re Patent No. 6887862
Issue Date: May 3,2005
Application No. 09871441
Filed: May 31,2001
Attorney Docket No. 17858/120103

:
:DECISION GRANTING PETITION
:UNDER 37 CFR 1.378(c)
:

This is a decision on the electronic petition, filed May 10,2010 ,under 37 CFR 1.378(c) to accept the unintentionally delayed payment of the 3.5 year maintenance fee for the above-identified patent.

The petition is **GRANTED**.

The maintenance fee is accepted, and the above-identified patent reinstated as of May 10,2010 .
This decision also constitutes notice that the fee has been accepted. An electronic copy of the petition and this decision has been created as an entry in the Image File Wrapper. Nevertheless, petitioner should print and retain an independent copy.

Telephone inquiries related to this electronic decision should be directed to the Electronic Business Center at 1-866-217-9197.

UNITED STATES PATENT AND TRADEMARK OFFICE

Commissioner for Patents
United States Patent and Trademark Office
P.O. Box 1450
Alexandria, VA 22313-1450
www.uspto.gov

JJGJR.: 07-06

Paper No: __

OWENS CORNING
2790 COLUMBUS ROAD
GRANVILLE OH 43023

COPY MAILED
JUL 24 2006
OFFICE OF PETITIONS

In re Application of	:	
Chen, et al.	:	
Application No. 09/871,467	:	DECISION
Filing Date: 31 May, 2001	:	
Attorney Docket No.: 25094A	:	

This is a decision on the petition filed on 21 June, 2006, alleging unintentional delay under 37 C.F.R. §1.137(b).

For the reasons set forth below, the petition under 37 C.F.R.§1.137(b) is **GRANTED**.

BACKGROUND

The record reflects that:

- Petitioner failed to reply timely and properly to the Notice of Allowance/Allowability and Fees Due and Notice of Allowability mailed on 2 November, 2005, with reply due absent extension of time on or before 2 February, 2006;
- the instant application went abandoned after midnight 2 February, 2006;
- the Office mailed a Notice of Abandonment on 11 May, 2006;
- on 5 June, 2006, Petitioner filed the instant petition (with fee) and the reply in the form of fees due, and made the statement of unintentional delay.

Out of an abundance of caution, Petitioners always are reminded that those registered to practice

and all others who make representations before the Office are reminded to inquire into the underlying facts of representations made to the Office and support averments with the appropriate documentation–since all owe to the Office the continuing duty to disclose.[1]

STATUTES, REGULATIONS AND ANALYSIS

Congress has authorized the Commissioner to "revive an application if the delay is shown to the

---

[1] See supplement of 17 June, 1999. The Patent and Trademark Office is relying on petitioner's duty of candor and good faith and accepting a statement made by Petitioner. See Changes to Patent Practice and Procedure, 62 Fed. Reg. at 53160 and 53178, 1203 Off. Gaz. Pat. Office at 88 and 103 (responses to comments 64 and 109)(applicant obligated under 37 C.F.R. §10.18 to inquire into the underlying facts and circumstances when providing statements to the Patent and Trademark Office).

Specifically, the regulations at 37 C.F.R. §10.18 provide:

§ 10.18 Signature and certificate for correspondence filed in the Patent and Trademark Office.
(a) For all documents filed in the Office in patent, trademark, and other non-patent matters, except for correspondence that is required to be signed by the applicant or party, each piece of correspondence filed by a practitioner in the Patent and Trademark Office must bear a signature by such practitioner complying with the provisions of §1.4(d), §1.4(e), or § 2.193(c)(1) of this chapter.
(b) By presenting to the Office (whether by signing, filing, submitting, or later advocating) any paper, the party presenting such paper, whether a practitioner or non-practitioner, is certifying that—

(1) All statements made therein of the party's own knowledge are true, all statements made therein on information and belief are believed to be true, and all statements made therein are made with the knowledge that whoever, in any matter within the jurisdiction of the Patent and Trademark Office, knowingly and willfully falsifies, conceals, or covers up by any trick, scheme, or device a material fact, or makes any false, fictitious or fraudulent statements or representations, or makes or uses any false writing or document knowing the same to contain any false, fictitious or fraudulent statement or entry, shall be subject to the penalties set forth under 18 U.S.C. 1001, and that violations of this paragraph may jeopardize the validity of the application or document, or the validity or enforceability of any patent, trademark registration, or certificate resulting therefrom; and

(2) To the best of the party's knowledge, information and belief, formed after an inquiry reasonable under the circumstances, that —

(i) The paper is not being presented for any improper purpose, such as to harass someone or to cause unnecessary delay or needless increase in the cost of prosecution before the Office;

(ii) The claims and other legal contentions therein are warranted by existing law or by a nonfrivolous argument for the extension, modification, or reversal of existing law or the establishment of new law;

(iii) The allegations and other factual contentions have evidentiary support or, if specifically so identified, are likely to have evidentiary support after a reasonable opportunity for further investigation or discovery; and

(iv) The denials of factual contentions are warranted on the evidence, or if specifically so identified, are reasonably based on a lack of information or belief.

(c) Violations of paragraph (b)(1) of this section by a practitioner or non-practitioner may jeopardize the validity of the application or document, or the validity or enforceability of any patent, trademark registration, or certificate resulting therefrom. Violations of any of paragraphs (b)(2)(i) through (iv) of this section are, after notice and reasonable opportunity to respond, subject to such sanctions as deemed appropriate by the Commissioner, or the Commissioner's designee, which may include, but are not limited to, any combination of —

(1) Holding certain facts to have been established;
(2) Returning papers;
(3) Precluding a party from filing a paper, or presenting or contesting an issue;
(4) Imposing a monetary sanction;
(5) Requiring a terminal disclaimer for the period of the delay; or
(6) Terminating the proceedings in the Patent and Trademark Office.

(d) Any practitioner violating the provisions of this section may also be subject to disciplinary action. See § 10.23(c)(15).
[Added 50 FR 5175, Feb. 6, 1985, effective Mar. 8, 1985; para. (a) revised, 58 FR 54494, Oct. 22, 1993, effective Nov. 22, 1993; paras. (a) & (b) revised, paras. (c) & (d) added, 62 FR 53131, Oct. 10, 1997, effective Dec. 1, 1997; para. (a) revised, 69 FR 56481, Sept. 21, 2004, effective Oct. 21, 2004]

satisfaction of the Commissioner to have been "unavoidable." 35 U.S.C. §133 (1994).[2]

The regulations at 37 C.F.R. §1.137(a) and (b) set forth the requirements for a petitioner to revive a previously unavoidably or unintentionally, respectively, abandoned application under this congressional grant of authority. The language of 35 U.S.C. §133 and 37 C.F.R. §1.137(a) is clear, unambiguous, and without qualification: the delay in tendering the reply to the outstanding Office action, as well as filing the first petition seeking revival, must have been unavoidable for the reply now to be accepted on petition.[3]

Delays in responding properly raise the question whether delays are unavoidable.[4] Where there is a question whether the delay was unavoidable, Petitioners must meet the burden of establishing that the delay was unavoidable within the meaning of 35 U.S.C. §133 and 37 C.F.R. §1.137(a).[5] And the Petitioner must be diligent in attending to the matter.[6] Failure to do so does not constitute the care required under Pratt,[7] and so cannot satisfy the test for diligence and due care.

(By contrast, unintentional delays are those that do not satisfy the very strict statutory and regulatory requirements of unavoidable delay, and also, by definition, are not intentional.[8]))

As to the Allegation
of Unintentional Delay

The requirements for a grantable petition under 37 C.F.R. §1.137(b) are the petition and fee, a

---

[2] 35 U.S.C. §133 provides:
35 U.S.C. §133 Time for prosecuting application.
Upon failure of the applicant to prosecute the application within six months after any action therein, of which notice has been given or mailed to the applicant, or within such shorter time, not less than thirty days, as fixed by the Commissioner in such action, the application shall be regarded as abandoned by the parties thereto, unless it be shown to the satisfaction of the Commissioner that such delay was unavoidable.

[3] Therefore, by example, an unavoidable delay in the payment of the Filing Fee might occur if a reply is shipped by the US Postal Service, but due to catastrophic accident, the delivery is not made.

[4] See: *Changes to Patent Practice and Procedure*; *Final Rule Notice*, 62 *Fed. Reg.* at 53158-59 (October 10, 1997), 1203 *Off. Gaz. Pat. Office* at 86-87 (October 21, 1997).

[5] See: In re Application of G, 11 USPQ2d 1378, 1380 (Comm'r Pats. 1989).

[6] See: Diligence in Filing Petitions to Revive and Petitions to Withdraw the Holding of Abandonment, 1124 Off. Gaz. Pat. Office 33 (March 19, 1991). It was and is Petitioner's burden to exercise diligence in seeking either to have the holding of abandonment withdrawn or the application revived. See 1124 Off. Gaz. Pat. Office supra.

[7] The test of diligence in the prosecution of an application before the Commissioner is, in the context of ordinary human affairs, the test is such care as is generally used and observed by prudent and careful persons in relation to their most important business. Ex parte Pratt, 1887 Dec. Comm'r Pat. 31 (Comm'r Pat. 1887); Ex parte Henrich, 1913 Dec. Comm'r Pat. 139, 141 (Comm'r. Pat. 1913).

[8] Therefore, by example, an unintentional delay in the reply might occur if the reply and transmittal form are to be prepared for shipment by the US Postal Service, but other pressing matters distract one's attention and the mail is not timely deposited for shipment.

statement/showing of unintentional delay, a proper reply, and–where appropriate--a terminal disclaimer and fee.

It appears that Petitioner has satisfied the requirements of the regulation.

CONCLUSION

The petition under 37 C.F.R. §1.137(b) hereby is **granted**.

The instant application is released to Publications Branch to be processed into a patent in due course.

Telephone inquiries concerning this decision may be directed to the undersigned at (571) 272-3214.

John J. Gillon, Jr.
Senior Attorney
Office of Petitions

UNITED STATES PATENT AND TRADEMARK OFFICE

Commissioner for Patents
United States Patent and Trademark Office
P.O. Box 1450
Alexandria, VA 22313-1450
www.uspto.gov

UNITED STATES PATENT OFFICE

Patent No. **7,157,524** Issued: January 02, 2007

On petition requesting issuance of a certificate for correction of inventorship pursuant to 35 USC § 256, it has been found that the above-identified patent, through error and without any deceptive intent, improperly sets forth the inventorship. Accordingly, it is hereby certified that the correct inventorship of this patent is:

Liang Chen, New Albany, OH
Jay W. Hinze, Newark, OH
William G. Hager, Westville, OH
Joseph P. Rynd, Stow, OH

David W. Wu
Supervisory Patent Examiner
Art Unit 1796

UNITED STATES PATENT AND TRADEMARK OFFICE

UNITED STATES DEPARTMENT OF COMMERCE
United States Patent and Trademark Office
Address: COMMISSIONER FOR PATENTS
P.O. Box 1450
Alexandria, Virginia 22313-1450
www.uspto.gov

APPLICATION NO.	FILING DATE	FIRST NAMED INVENTOR	ATTORNEY DOCKET NO.	CONFIRMATION NO.
09/871,467	05/31/2001	Liang Chen	25094A	1738

22889 7590 01/31/2008
OWENS CORNING
2790 COLUMBUS ROAD
GRANVILLE, OH 43023

EXAMINER
YOON, TAE H

ART UNIT	PAPER NUMBER
1714	

MAIL DATE	DELIVERY MODE
01/31/2008	PAPER

Please find below and/or attached an Office communication concerning this application or proceeding.

The time period for reply, if any, is set in the attached communication.

UNITED STATES PATENT and TRADEMARK OFFICE

Commissioner for Patents
UNITED STATES PATENT AND TRADEMARK OFFICE
P.O. Box 1450
Alexandria, VA 22313-1450
WWW.USPTO.GOV

Mailed: 1-31-08

In re U.S. Patent No. 7,157,524 : **DECISION ON PETITION**
Issued: January 02, 2007 : *37 CFR 1.324*
Application Number: 09/871,467 :
Filed: May 31, 2001 :
For: SURFACTANT-CONTAINING INSULATION BINDER

This is a decision on the petition, filed on January 10, 2007, to correct inventorship in a patent under 37 CFR 1.324.

The petition is **GRANTED**.

The patented file is being forwarded to Certificate of Corrections Branch for Issuance of a certificate naming only the actual inventor or inventors.

David W. Wu
Supervisory Patent Examiner
Art Unit 1796
Technology Center 1700
Chemical and Materials Engineering

OWENS CORNING
2790 COLUMBUS ROAD
GRANVILLE OH 43023

UNITED STATES PATENT AND TRADEMARK OFFICE

Commissioner for Patents
United States Patent and Trademark Office
P.O. Box 1450
Alexandria, VA 22313-1450
www.uspto.gov

WILLIAM P. WILBAR
SIERRA PATENT GROUP, LTD.
P.O. BOX 6149
STATELINE, NV 89449

COPY MAILED

DEC 29 2005

OFFICE OF PETITIONS

In re Application of	:	
John Hovannes Gookassian	:	
Application No. 09/871,484	:	ON PETITION
Filed: May 31, 2001	:	
Attorney Docket No. HEUR-012	:	

This is a decision on the petition under 37 CFR 1.182, filed September 6, 2005, to change the name of the inventor.

The petition is **granted**[1].

The name of the inventor will be changed from Hovhannes Ghukasyan to **John Hovannes Gookassian**.

A corrected Filing Receipt is enclosed with this decision on petition.

Finance records show that petitioner submitted $130 for treatment of the instant petition. However, effective December 8, 2004, a petition under 37 CFR 1.182 requires a $400 petition fee. Therefore, the balance of $270 has been charged to petitioner's deposit account.

This application is being referred to the Office of Publications for processing into a patent.

Telephone inquiries regarding this decision should be directed to the undersigned at (571) 272- 3226.

Andrea Smith
Petitions Examiner
Office of Petitions

Enclosure: Corrected Filing Receipt

---

[1] The Office acknowledges receipt of $700 for payment of the issue fee and $300 for payment of the publication fee submitted on October 19, 2005.

UNITED STATES PATENT AND TRADEMARK OFFICE

COMMISSIONER FOR PATENTS
UNITED STATES PATENT AND TRADEMARK OFFICE
P.O. BOX 1450
ALEXANDRIA, VA 22313-1450
www.uspto.gov

JAN - 8 2004

Paper No. 10

In re Application of
Kari Holopainen *et al*
Application No. 09/871,534
Filed: May 31, 2001
Attorney Docket No. 9926.1016

DECISION ON PETITION

This is a decision on the petition filed by facsimile transmission on April 15, 2003, as resubmitted by facsimile transmission on August 22, 2003. The relief requested by petitioners is the withdrawal of the examiner's holding that this application stands abandoned for failure to file a proper and timely reply to the Office action dated July 10, 2002. The petition is considered pursuant to 37 CFR 1.181, and no fee is required.

The petition is granted.

Petitioners allege that this application is not abandoned because a timely and proper reply was in fact filed in response to the outstanding Office action. Petitioners support this allegation by including a copy of the reply and a copy of a post card receipt showing that the reply was in fact received in the Office on August 5, 2002, a date within the period set for filing a reply to the July 10, 2002 Office action. Based upon this evidence, it is clear that the application is not abandoned.

Accordingly, the Notice of Abandonment is hereby vacated, the holding of abandonment is withdrawn, and the application is restored to pending status. The application is being forwarded to the examiner for action on the reply filed on August 5, 2002.

PETITION GRANTED.

E. Rollins-Cross, Director
Technology Center 3700

Steinberg & Raskin, P.C.
1140 Avenue of the Americas
15th Floor
New York, NY 10036-5803

UNITED STATES PATENT AND TRADEMARK OFFICE

COMMISSIONER OF PATENTS

December 29, 2004

Ross J. Oehler
Aventis Pharmaceuticals Inc.
Route 202-206
Mail Code : D303A
Bridgewater, NJ 08807

In re application of
Collis et al
Serial No.: 09/871561
Filed: May 31, 2001
For: HETEROARYL-CYCLIC ACETALS

DECISION ON PETITION

This is a decision on the petition received March 7, 2002 and January 8, 2004 to withdraw the holding of abandonment in the above-identified application.

The Petition is hereby Granted.

On January 14, 2002, Counsel responded to the Notice to File Missing Parts of Application. Unfortunately, part of the response was lost. Due to the photo copying of documents received after 911.

The application will be completed with the documents received with the petition of January 8, 2004.

Telephone inquiries concerning this application may be directed to Doshie E. Day (703-308-3640). The office regrets any unconvinced this might have caused the applicant.

Doshie Day

Doshie E. Day
Office of Initial Patent Examination
Program Management Assistant

UNITED STATES PATENT AND TRADEMARK OFFICE

COMMISSIONER FOR PATENTS
UNITED STATES PATENT AND TRADEMARK OFFICE
P.O. BOX 1450
ALEXANDRIA, VA 22313-1450
www.uspto.gov

ANDREA Q. RYAN
SANOFI-AVENTIS U.S. LLC
1041 ROUTE 202-206
MAIL CODE: D303A
BRIDGEWATER NJ 08807

COPY MAILED

DEC 19 2008

OFFICE OF PETITIONS

In re Application of	:
Collis, et al.	: DECISION ON APPLICATION
Application No. 09/871,564	: FOR PATENT TERM ADJUSTMENT
Filed: May 31, 2001	:
Atty. Dkt. No.: CA2295US-NP	:

This is a decision on the "Combined Request for Reconsideration of Patent Term Adjustment Indicated in the Notice of Allowance (37 C.F.R. § 1.705) and Statement of the Correct Patent Term Adjustment: Basis(es) Under § 1.702 for the Adjustment (37 C.F.R. § 1.705(b)(2)(i) and (ii))," filed November 4, 2008. This matter is being treated as an application for patent term adjustment under 37 CFR 1.705(b).

The application for patent term adjustment ("PTA") under 37 CFR 1.705(b) is hereby **GRANTED TO THE EXTENT INDICATED HEREIN**.

The Determination of Patent Term Adjustment mailed August 13, 2008 indicated that the application is entitled to adjustment of 486 days. Applicants argue that the correct adjustment is 612 days.

The correct PTA at the time of the allowance is 632 days, as discussed herein.

Applicants do not dispute the adjustments totaling 1,002 days. Applicants do not contest the reductions totaling 390 days.

Applicants contest the reduction of 126 days in connection with the reply to the restriction requirement, a copy of which was received via facsimile on December 1, 2005. Applicants argue that the reply to the restriction requirement was filed via facsimile on August 26, 2005.

A review of the record reveals that a restriction requirement was mailed April 28, 2005. As established by applicants, a reply to the restriction requirement was filed August 26, 2005. (A

copy of the reply was submitted via facsimile on December 1, 2005.) Thus, in accordance with 37 CFR 1.704(b), the adjustment is subject to a reduction of 29 days, rather than 126 days, in connection with the submission of the reply to the restriction requirement on August 26, 2005. The reduction commenced July 29, 2005, the day after the date that is three months after the date that the restriction requirement was mailed, and ended August 26, 2005, the date that the reply thereto was filed.

The application is entitled to further adjustment of 49 days in accordance with 37 CFR 1.702(a)(2) in connection with the mailing of the non-final Office action on February 13, 2006. The adjustment commenced December 27, 2005, the day after the date that is four months after the date that the reply to the restriction requirement was filed, and ended February 13, 2006, the date that the non-final Office action was mailed. *See*, 37 CFR 1.703(a)(2).

In review thereof, as of the time of allowance, the application is entitled to an adjustment of 632 days (adjustments totaling 1,051 days less reductions totaling 419 days).

Receipt is hereby acknowledged of the required PTA application fee of $200.00.

Applicants are further advised that the patent term adjustment indicated in the patent will include any additional patent term accrued pursuant to §§ 1.702(a)(4) and 1.702(b).

The application file is being forwarded to the Office of Patent Publications for issuance of a patent.

Telephone inquiries specific to this matter should be directed to Petitions Attorney Alesia M. Brown at (571) 272-3205.

Kery Fries

Kery Fries
Senior Legal Advisor
Office of Patent Legal Administration
Office of Deputy Commissioner
for Patent Examination Policy

Enclosure: Adjusted PAIR Calculation

Day : Wednesday

Date: 12/17/2008

PALM INTRANET

Time: 15:17:38

PTA Calculations for Application: 09/871564			
Application Filing Date:	05/31/2001	PTO Delay (PTO):	1002
Issue Date of Patent:		Three Years:	0
Pre-Issue Petitions:	0	Applicant Delay (APPL):	516
Post-Issue Petitions:	0	Total PTA (days):	632
PTO Delay Adjustment:	146		

File Contents History

Number	Date	Contents Description	PTO	APPL	START
75	12/17/2008	ADJUSTMENT OF PTA CALCULATION BY PTO	146		
66	08/13/2008	MAIL NOTICE OF ALLOWANCE			
65	08/11/2008	ISSUE REVISION COMPLETED			
64	08/11/2008	DOCUMENT VERIFICATION			
63	08/11/2008	NOTICE OF ALLOWANCE DATA VERIFICATION COMPLETED			
62	08/11/2008	NOTICE OF ALLOWABILITY			
58	06/19/2008	DATE FORWARDED TO EXAMINER			
57	05/30/2008	RESPONSE AFTER NON-FINAL ACTION		87	53
56	05/30/2008	REQUEST FOR EXTENSION OF TIME - GRANTED			
55	12/05/2007	ELECTRONIC REVIEW			
54	12/04/2007	EMAIL NOTIFICATION			
53	12/04/2007	MAIL NON-FINAL REJECTION			
52	11/28/2007	NON-FINAL REJECTION			
51	10/04/2007	DATE FORWARDED TO EXAMINER			
50	09/24/2007	AMENDMENT SUBMITTED/ENTERED WITH FILING OF CPA/RCE			
49	10/04/2007	DATE FORWARDED TO EXAMINER			
48	09/24/2007	REQUEST FOR CONTINUED EXAMINATION (RCE)			
47	10/04/2007	DISPOSAL FOR A RCE/CPA/129 (EXPRESS ABANDONMENT IF CPA)			
46	09/24/2007	REQUEST FOR EXTENSION OF TIME - GRANTED			
45	09/24/2007	WORKFLOW - REQUEST FOR RCE - BEGIN			
44	05/04/2007	ELECTRONIC REVIEW			

43	05/03/2007	EMAIL NOTIFICATION			
42	04/30/2007	MAIL ADVISORY ACTION (PTOL - 303)			
41	04/26/2007	ADVISORY ACTION (PTOL-303)			
40	04/25/2007	DATE FORWARDED TO EXAMINER			
39	04/23/2007	AMENDMENT/ARGUMENT AFTER NOTICE OF APPEAL			
38	04/23/2007	NOTICE OF APPEAL FILED		90	36
37	04/23/2007	REQUEST FOR EXTENSION OF TIME - GRANTED			
36	10/23/2006	MAIL FINAL REJECTION (PTOL - 326)			
35	10/19/2006	FINAL REJECTION			
34	08/16/2006	DATE FORWARDED TO EXAMINER			
33	08/10/2006	RESPONSE AFTER NON-FINAL ACTION		89	31
32	08/10/2006	REQUEST FOR EXTENSION OF TIME - GRANTED			
31	02/13/2006	MAIL NON-FINAL REJECTION			
30	02/08/2006	NON-FINAL REJECTION			
29	03/06/2003	INFORMATION DISCLOSURE STATEMENT CONSIDERED			
28	12/19/2005	DATE FORWARDED TO EXAMINER			
27	12/01/2005	RESPONSE TO ELECTION / RESTRICTION FILED		126	25
26	12/01/2005	REQUEST FOR EXTENSION OF TIME - GRANTED			
25	04/28/2005	MAIL RESTRICTION REQUIREMENT	1002		-1
24	04/27/2005	REQUIREMENT FOR RESTRICTION / ELECTION			
23	03/17/2005	IFW TSS PROCESSING BY TECH CENTER COMPLETE			
22	03/17/2005	CASE DOCKETED TO EXAMINER IN GAU			
21	03/06/2003	REFERENCE CAPTURE ON IDS			
20.7	03/06/2003	INFORMATION DISCLOSURE STATEMENT (IDS) FILED			
20	03/06/2003	INFORMATION DISCLOSURE STATEMENT (IDS) FILED			
19	08/01/2001	REQUEST FOR FOREIGN PRIORITY (PRIORITY PAPERS MAY BE INCLUDED)			
18	01/18/2005	APPLICATION RETURN FROM OIPE			
17	01/18/2005	APPLICATION IS NOW COMPLETE			
16	01/18/2005	APPLICATION RETURN TO OIPE			
15	01/18/2005	APPLICATION DISPATCHED FROM OIPE			

14	01/18/2005	APPLICATION IS NOW COMPLETE			
13	03/07/2002	ADDITIONAL APPLICATION FILING FEES		124	5
12	03/07/2002	A STATEMENT BY ONE OR MORE INVENTORS SATISFYING THE REQUIREMENT UNDER 35 USC 115, OATH OF THE APPLIC			
11	12/29/2004	MAIL-PETITION TO REVIVE APPLICATION - GRANTED			
10	03/07/2002	PETITION ENTERED			
9	12/29/2004	WITHDRAW PUBLICATION/PRE-EXAM ABANDON			
8	12/04/2001	ABANDONMENT -- DURING PREEXAM PROCESSING			
7	01/14/2002	ADDITIONAL APPLICATION FILING FEES			
6	01/14/2002	A STATEMENT BY ONE OR MORE INVENTORS SATISFYING THE REQUIREMENT UNDER 35 USC 115, OATH OF THE APPLIC			
5	08/03/2001	NOTICE MAILED--APPLICATION INCOMPLETE--FILING DATE ASSIGNED			
3	08/01/2001	CORRESPONDENCE ADDRESS CHANGE			
2	06/11/2001	IFW SCAN & PACR AUTO SECURITY REVIEW			
1	05/31/2001	INITIAL EXAM TEAM NN			

Search Another: Application# Search

EXPLANATION OF PTA CALCULATION

EXPLANATION OF PTE CALCULATION

To go back, right click here and select Back. To go forward, right click here and select Forward. To refresh, right click here and select Refresh.

Back to OASIS | Home page

UNITED STATES PATENT AND TRADEMARK OFFICE

COMMISSIONER FOR PATENTS
UNITED STATES PATENT AND TRADEMARK OFFICE
WASHINGTON, D.C. 20231
www.uspto.gov

Paper No. 7

BROWN RAYSMAN MILLSTEIN
FELDER & STEINER LLP
900 Third Avenue
New York, NY 10022

MAIL

MAY 03 2002

DIRECTOR OFFICE
TECHNOLOGY CENTER 2600

In re Application of
Sang Hoon Ho, et al.
Application No. 09/871,570
Filed: May 31, 2001
For: COMPACT HANDS-FREE ADAPTER FOR USE WITH A CELLULAR TELEPHONE

DECISION ON PETITION TO MAKE SPECIAL

This is a decision on the petition under 37 C.F.R. § 1.102, filed February 15, 2002, to make the above-identified application special.

The petition requests that the above-identified application be made special under the procedure set forth in M.P.E.P. § 708.02, item II: Infringement.

A grantable petition under 37 C.F.R. § 1.102(d), M.P.E.P. § 708.02, item II: Infringement, must be accompanied by the required fee and a statement alleging:

(1) that there is an infringing device or product actually on the market or method in use;

(2) that a rigid comparison of the alleged infringing device, product, or method with the claims of the application has been made, and that, in his or her opinion, some of the claims are unquestionably infringed; and

(3) that he or she has made or caused to be made a careful and thorough search of the prior art or has a good knowledge of the pertinent prior art.

Further, Applicant must provide one copy of each of the references deemed most closely related to the subject matter encompassed by the claims if said references are not already of record.

The petition is **GRANTED**.

The application will retain its special status throughout its entire course of prosecution the Patent and Trademark Office, including appeal, if any to the Board of Patent Appeals and Interferences, subject only to diligent prosecution by the applicant.

The application file will be forwarded to the examiner for expedited prosecution.

Kenneth A. Wieder
Special Program Examiner
Technology Center 2600
Communications

UNITED STATES PATENT AND TRADEMARK OFFICE

COMMISSIONER FOR PATENTS
UNITED STATES PATENT AND TRADEMARK OFFICE
P.O. BOX 1450
ALEXANDRIA, VA 22313-1450
www.uspto.gov

HARNESS, DICKEY & PIERCE, P.L.C.
P.O. BOX 828
BLOOMFIELD HILLS, MI 48303

COPY MAILED

AUG 2 5 2004

OFFICE OF PETITIONS

In re Application of
Akira Arai, et al. :
Application No. 09/871,600 : ON PETITION
Filed: May 31, 2001 :
Attorney Docket No. 9319A-000222 :

This is a decision on the petition under 37 CFR 1.313(c)(2) to withdraw the above-identified application from issue after payment of the issue fee, filed August 24, 2004.

The petition is **GRANTED**.

The above-identified application is withdrawn from issue for consideration of a submission under 37 CFR 1.114 (request for continued examination). See 37 CFR 1.313(c)(2).

Petitioner is advised that the issue fee paid July 19, 2004, in the above-identified application cannot be refunded. If, however, the above-identified application is again allowed, petitioner may request that it be applied towards the issue fee required by the new Notice of Allowance. [1]

Telephone inquiries relating to this decision should be directed to the undersigned at (703) 305-9220.

The application is being referred to Technology Center AU 1742 for further processing of the request for continued examination under 37 CFR 1.114 filed August 24, 2004.

Sherry D. Brinkley
Petitions Examiner
Office of Petitions
Office of the Deputy Commissioner
for Patent Examination Policy

[1]The request to apply the issue fee to the new Notice may be satisfied by completing and returning the new Issue Fee Transmittal Form PTOL-85(b), which includes the following language thereon: "Commissioner for Patents is requested to apply the Issue Fee and Publication Fee (if any) or re-apply any previously paid issue fee to the application identified above." Petitioner is advised that, whether a fee is indicated as being due or not, the Issue Fee Transmittal Form **must** be completed and timely submitted to avoid abandonment. Note the language in bold text on the first page of the Notice of Allowance and Fee(s) Due (PTOL-85).

SPE RESPONSE FOR CERTIFICATE OF CORRECTION

7+

Paper No.: _____

DATE : December 21, 2006

TO SPE OF : ART UNIT 1742

SUBJECT : Request for Certificate of Correction for Appl. No.: 09/871600 Patent No.: 6,979,374 B2

Please respond to this request for a certificate of correction within 7 days.

Please review the requested changes/corrections as shown in the **COCIN** document(s) in the IFW application image. No new matter should be introduced, nor should the scope or meaning of the claims be changed.

Please complete the response (see below) and forward the completed response to scanning using document code **COCX**.

Elisha Evans
Certificates of Correction Branch

703-308-9390 ext. *110*

Thank You For Your Assistance

The request for issuing the above-identified correction(s) is hereby:
Note your decision on the appropriate box.

- ☐ **Approved** — **All** changes apply.
- ☒ **Approved in Part** — Specify below which changes **do not** apply.
- ☐ **Denied** — State the reasons for denial below.

Comments: The change to column 12, line 12, changing "60" to --80-- has not been approved in that there is no occurrence of "60" in col 12, line 12. It appears that this change was intended for col 12, line 21.
JPL

Roy Van Cing — **SPE**

1742 — **Art Unit**

UNITED STATES PATENT AND TRADEMARK OFFICE

COMMISSIONER FOR PATENTS
UNITED STATES PATENT AND TRADEMARK OFFICE
P.O. BOX 1450
ALEXANDRIA, VA 22313-1450
www.uspto.go

MAR - 3 2004

Steven L. Highlander
FULBRIGHT & JAWORSKI
600 Congress Avenue, Suite 2400
Austin TX 78701

In re application of Timur Yarovinsky	:
Serial No. : 09/871,607	: DECISION ON PETITION
Filed : May 31, 20001	:
Attorney Docket No.: IOWA:040US/SLH	:

This is in response to applicant's petition, filed October 27, 2003 under 37 CFR 1.181, to withdraw the finality of the Office action mailed August 27, 2003.

BACKGROUND

Review of the file history shows that the application was filed May 31, 2001 under 35 U.S.C. 111(a). The application as filed contained 20 claims. A restriction requirement was mailed September 24, 2002. Applicants elected Group I, claims 1-10, without traverse. On January 15, 2003 the examiner mailed a first Office action on the merits, wherein claims 1-10 were rejected. Applicants filed a response, including amendments to the claims, on April 21, 2003. On August 27, 2003 the examiner mailed an Office action which included new grounds of rejection. The examiner made the action final, stating that the new grounds of rejection were necessitated by applicant's amendment.

DISCUSSION

The claim at issue is claim 2, which originally claimed a nucleic acid molecule having either a CCCTT or a TCCTT motif. The claim was rejected under 35 U.S.C. 102(b) over Cheng, which discloses a nucleic acid molecule having a CCCTT motif. When applicant amended the claim to recite only the TCCTT motif, the examiner rejected the claim under 35 U.S.C. 102(e) over Wang, which discloses a nucleic acid molecule having a TCCTT motif.

Applicant argues that the rejection of claim 2 over Wang could have been made in the first Office action. This argument is not persuasive for two reasons. First, the prior art appears to recognize that the two motifs are functional equivalents. For instance, the specification itself uses the notation (T/C)CCTT to designate the topoisomerase cleavage site, indicating that either motif will be recognized by the enzyme. Since one motif would appear to render the other obvious, and the amended claim would appear to be of little value if allowed (since an equivalent non-infringing nucleic acid could be made by

changing one nucleotide), it is understandable that the examiner did not anticipate applicant's amendment.

Second, while Wang *could* have been cited, examiners are admonished not to cite unnecessary references. MPEP 904.03 states, in part:

> In selecting the references to be cited, the examiner should carefully compare the references with one another and with the applicant's disclosure to avoid the citation of an unnecessary number. The examiner is not called upon to cite all references that may be available, but only the "best."

Since Cheng is a 102(b) reference (a statutory bar) while Wang is a 102(e) reference (which can be antedated), Cheng was clearly the better reference. Cheng is still applied to other claims, but Wang is now the best reference for claim 2.

DECISION

Applicant's petition is **DENIED**.

Any request for reconsideration or review of this decision must be made by a renewed petition and must be filed within TWO MONTHS of the mailing date of this decision in order to be considered timely.

Should there be any questions with regard to this letter please contact Bruce Campell by letter addressed to the Director, Technology Center 1600, P.O. Box 1450, Alexandria, VA, 22313-1450, or by telephone at (571) 272-0974 or by facsimile transmission at (571) 273-0974.

John Doll
Director, Technology Center 1600

UNITED STATES PATENT AND TRADEMARK OFFICE

COMMISSIONER FOR PATENTS
UNITED STATES PATENT AND TRADEMARK OFFICE
P.O. BOX 1450
ALEXANDRIA, VA 22313-1450
www.uspto.gov
DIW 06-03

Paper No. 13

WELSH & KATZ, LTD.
THOMAS W. TOLPIN
22ND FLOOR
120 SOUTH RIVERSIDE PLAZA
CHICAGO IL 60606

COPY MAILED

JUN 17 2003

OFFICE OF PETITIONS

In re Application of	:	
Paulshus et al.	:	
Application No. 09/871,608	:	ON PETITION
Filed: 31 May, 2001	:	
Attorney Docket No. 7822-82871	:	

This is a decision on the petition, filed on 9 June, 2003, under 37 CFR 1.137(a) which is first treated as a petition to withdraw the holding of abandonment for the above-identified application.

The petition to withdraw the holding of abandonment is **GRANTED**.

The petition under 37 CFR 1.137(a) is **DISMISSED AS MOOT**.

The application was held abandoned on 3 November, 2002, for failure to file a timely response to the non-final Office action mailed on 2 August, 2002, which set a three (3) month shortened statutory period for reply. Extensions of time were available under 37 CFR 1.136(a). Notice of Abandonment was mailed on 7 April, 2003.

Petitioner asserts that a proper reply, including an amendment and a request and payment for a three (3) month extension of time, was filed on 21 January, 2003. Petitioners note that the Extension of Time Request inadvertently requested and included a check in the amount due for a two (2) month extension of time rather than a three (3) month extension of time, as was necessary, but also included a general authorization stating "[i]if there is any error in the amount owed, authorization is hereby given to charge such amount to our Deposit Account No. 23-0920."

As petitioners' extension of time request, filed with the amendment on 21 January, 2003, did authorize the charging the

proper fee amount for a three (3) month time extension, it is obvious that a timely reply and proper response was in fact filed on 21 January, 2003.

Accordingly, as the abandonment was due to Office error, the holding of abandonment is withdrawn, and the Notice of Abandonment is vacated. In view thereof, the petition under 37 CFR 1.137(a) is moot. The petition fee $110.00 is unnecessary. However, petitioners are responsible for the difference between a two (2) month extension of time and a three (3) month extension of time, a total of $520.00. Therefore, counsel's deposit account, No. 23-0920, will be charged the balance due of $410.00.

This application is being forwarded to Technology Center 3600 for further processing.

Telephone inquiries concerning this matter may be directed to the undersigned at (703)308-6918.

DWood

Douglas I. Wood
Petitions Attorney
Office of Petitions

UNITED STATES PATENT AND TRADEMARK OFFICE

Commissioner for Patents
United States Patent and Trademark Office
P.O. Box 1450
Alexandria, VA 22313-1450
www.uspto.gov

ELAD BARKAN
12 HABANIN STREET
KEFAR SIRKIN 49935
ISRAEL

COPY MAILED

DEC 04 2007

OFFICE OF PETITIONS

In re Application of	:	
Elad Barkan	:	
Application No. 09/871,661	:	DECISION ON PETITION
Filed: June 4, 2001	:	
Attorney Docket No.	:	

This is a decision on the petition under 37 CFR 1.137(b), filed May 22, 2007, to revive the above-identified application.

The petition is **GRANTED.**

The application became abandoned for failure to timely reply within the meaning of 37 CFR 1.113 to the final Office action, mailed November 3, 2006, which set a shortened statutory period for reply of three (3) months. No extensions of time were obtained under the provisions of 37 CFR 1.136(a). Accordingly, the application became abandoned on February 6, 2007 (February 3, 2007, the due date, was a Saturday). A Notice of Abandonment was mailed on May 18, 2007.

The petition satisfies the requirements of 37 CFR 1.137(b) in that petitioner has supplied (1) a reply in the form of a request for continued examination, $395 filing fee, and submission (arguments) under 37 CFR 1.114, (2) the petition fee of $750, and (3) a proper statement of unintentional delay. Accordingly, the failure to timely reply to the final Office action of November 3, 2006 is accepted as being unintentionally delayed.

This application is being referred to Technology Center AU 2614 for processing the request for continued examination and for appropriate action in the normal course of business on the submission under 37 CFR 1.114 received May 22, 2007.

Telephone inquiries concerning this decision should be directed to the undersigned at (571) 272-3218.

Frances Hicks
Petitions Examiner
Office of Petitions

UNITED STATES PATENT AND TRADEMARK OFFICE

UNITED STATES DEPARTMENT OF COMMERCE
United States Patent and Trademark Office
Address: COMMISSIONER FOR PATENTS
P.O. Box 1450
Alexandria, Virginia 22313-1450
www.uspto.gov

APPLICATION NUMBER	FILING OR 371(C) DATE	FIRST NAMED APPLICANT	ATTY. DOCKET NO./TITLE
09/871,661	06/04/2001	Elad Barkan	

CONFIRMATION NO. 1312

POA ACCEPTANCE LETTER

Elad Barkan
12 Habanin Street
Kefar Sirkin 49935,
ISRAEL

OC000000027065514

Date Mailed: 12/04/2007

NOTICE OF ACCEPTANCE OF POWER OF ATTORNEY

This is in response to the Power of Attorney filed 05/22/2007.

The Power of Attorney in this application is accepted. Correspondence in this application will be mailed to the above address as provided by 37 CFR 1.33.

/fmhicks/

Office of Initial Patent Examination (571) 272-4000 or 1-800-PTO-9199

UNITED STATES PATENT AND TRADEMARK OFFICE

UNITED STATES DEPARTMENT OF COMMERCE
United States Patent and Trademark Office
Address: COMMISSIONER FOR PATENTS
P.O. Box 1450
Alexandria, Virginia 22313-1450
www.uspto.gov

APPLICATION NUMBER	FILING OR 371(C) DATE	FIRST NAMED APPLICANT	ATTY. DOCKET NO./TITLE
09/871,661	06/04/2001	Elad Barkan	P-9487-US

CONFIRMATION NO. 1312

POWER OF ATTORNEY NOTICE

Eitan Law Group
C/O LandonIP, Inc.
Suite 450
1700 Diagonal Road
Alexandria, VA 22314

OC000000027065441

Date Mailed: 12/04/2007

NOTICE REGARDING CHANGE OF POWER OF ATTORNEY

This is in response to the Power of Attorney filed 05/22/2007.

- The Power of Attorney to you in this application has been revoked by the applicant. Future correspondence will be mailed to the new address of record(37 CFR 1.33).

/fmhicks/

Office of Initial Patent Examination (571) 272-4000 or 1-800-PTO-9199

UNITED STATES PATENT AND TRADEMARK OFFICE

Commissioner for Patents
United States Patent and Trademark Office
P.O. Box 1450
Alexandria, VA 22313-1450
www.uspto.gov

VLADIMIR SHERMAN
C/O LANDON, STARK, CANTWELL & PAXTON
ONE CRYSTAL PARK, SUITE 210
2011 CRYSTAL DRIVE
ARLINGTON, VA 22202--370

COPY MAILED

OCT 23 2008

OFFICE OF PETITIONS

In re Application of	:	
Elad Barkan	:	
Application No. 09/871,661	:	DECISION ON PETITION
Filed: June 4, 2001	:	TO WITHDRAW
Attorney Docket No. P-9487-US	:	FROM RECORD
	:	

This is a decision on the Request to Withdraw as attorney or agent of record under 37 C.F.R. § 1.36(b), filed March 11, 2008.

The request is **DISMISSED** as moot.

A review of the file record indicates that the power of attorney to Vladimir Sherman c/o Landon, Stark, Cantwell & Paxton has been revoked by the applicant of the patent application on August 23, 2006. Accordingly, the request to withdraw under 37 C.F.R. § 1.36(b) is moot.

All future communications from the Office will continue to be directed to the below-listed address until otherwise notified by applicant.

Telephone inquires concerning this decision should be directed to undersigned at 571-272-1642.

/April M. Wise/
April M. Wise
Petitions Examiner
Office of Petitions

cc: ELAD BARKAN
12 HABANIM STREET
KFAR SIRKIN 49935 IL ISRAEL

UNITED STATES PATENT AND TRADEMARK OFFICE

Commissioner for Patents
United States Patent and Trademark Office
P.O. Box 1450
Alexandria, VA 22313-1450
www.uspto.gov

FINNEGAN, HENDERSON, FARABOW, GARRETT & DUNNER LLP
1300 I STREET, NW
WASHINGTON DC 20005

COPY MAILED

JUN 2 2 2004

OFFICE OF PETITIONS

In re Patent No. 6,707,160	:	
Issue Date: March 16, 2004	:	
Application No. 09/871,671	:	ON PETITION
Filed: June 4, 2001	:	
Attorney Docket No. 04329.2567	:	

This is a decision on the petition under 37 CFR 1.182, filed June 3, 2004, requesting a duplicate Letters Patent due to non-receipt of the original Letters Patent.

The petition is **dismissed**.

Any further petition to revive the above-identified application must be submitted within TWO (2) MONTHS from the mail date of this decision. Extensions of time under 37 CFR 1.136(a) are permitted. The reconsideration request should include a cover letter entitled "Renewed Petition under 37 CFR 1.182."

Applicant states that the Patent Application Information Retrieval System (PAIR) indicates that the original grant was mailed on March 16, 2004; however, applicant's representative has not received the Letters Patent to date. Applicant believes that the USPS lost the Letters Patent.

Initially, the Office notes that a request for a duplicate Letters Patent may be granted in two situations: 1) due to the loss of the Letters Patent either by the law firm, applicant or assignee, or the destruction of the Letters Patent (petition fee required); or 2) due to non-receipt of the Letters Patent (no petition fee required).

The showing required for issuance of a duplicate Letters Patent with no fee due to non-receipt is the same as that set forth in the Manual for Patent Examining Procedure, Section 711.03(c), under the subheading "Petitions to Withdraw the Holding of Abandonment."

The showing required to establish non-receipt of an Office communication must include:

1. A statement from the practitioner stating that the Office communication was not received by the practitioner and attesting to the fact that a search of the file jacket and docket records indicates that the Office communication was not received.

2. A copy of the docket record where the non-received Office communication would have been entered had it been received and docketed must be attached to and referenced in practitioner's statement.

In this instance, applicant has alleged non-receipt of the Letters Patent. Accordingly, applicant must provide a statement from the practitioner, as well as a copy of the docket records where the non-received Letters Patent would have been entered had it been received and docketed.

The $130.00 petition fee is not necessary and will be credited to Deposit Account No. 06-0916.

Further correspondence with respect to this matter should be addressed as follows and to the Attention of Senior Petitions Attorney Christina Tartera Donnell:

By mail: Commissioner for Patents
PO Box 1450
Alexandria, VA 22313-1450

By FAX: (703) 872-9306
Attn: Office of Petitions

By hand: U.S. Patent and Trademark Office
220 20th Street S.
Customer Window, Mail Stop Petition
Crystal Plaza Two, Lobby, Room 1B03
Arlington, VA 22202

Telephone inquiries concerning this decision should be directed to the undersigned at (703) 306-5589.

Christina Tartera Donnell

Christina Tartera Donnell
Senior Petitions Attorney
Office of Petitions

UNITED STATES PATENT AND TRADEMARK OFFICE

Commissioner for Patents
United States Patent and Trademark Office
P.O. Box 1450
Alexandria, VA 22313-1450
www.uspto.gov

FINNEGAN, HENDERSON, FARABOW, GARRETT & DUNNER, LLP
1300 I STREET, NW
WASHINGTON, DC 20005

COPY MAILED
AUG 0 5 2004
OFFICE OF PETITIONS

In re Patent No. 6,707,160	:	
Issue Date: March 16, 2004	:	ON PETITION
Application No. 09/871,671	:	
Filed: June 4, 2001	:	
Attorney Docket No. 04329.2567	:	

This is a decision on the renewed petition under 37 CFR 1.182, filed July 23, 2004, requesting issuance of duplicate Letters Patent for the above-identified application due to non-receipt of the original Letters Patent.

In the initial petition, petitioner stated the Patent Application Information Retrieval System (PAIR) indicated that the original grant was mailed on March 16, 2004; however, petitioner's representative did not receive the Letters Patent as of the date of the filing of the petition. Petitioner believed that the USPS lost the Letters Patent.

The showing required to establish non-receipt of an Office communication must include a statement from the practitioner stating that the practitioner did not receive the Office communication and attesting to the fact that a search of the file jacket and docket records indicates that the Office communication was not received. A copy of the docket record where the non-received Office communication would have been entered had it been received and docketed must be attached to and referenced in practitioner's statement. See Withdrawing the Holding of Abandonment When Office Actions Are Not Received; 1156 Off. Gaz. Pat. Office 53 (November 16, 1993).

In support of petitioner's allegation of non-receipt of the Letters Patent, petitioner submitted a copy of log pages covering the period from March 16, 2004 (the date of issuance of the subject patent) through March 30, 2004. Petitioner states that the log is a record

of all correspondence received from the USPTO by petitioner's representative. Petitioner's representative states that upon review of the file jacket and the log, there is no record of receipt of the subject Letters Patent, other than soft copies thereof.

Upon consideration of the evidence submitted on petition, the Office has concluded that petitioner has met the showing of non-receipt of the original Letters Patent. Accordingly, the petition is **granted**. No petition fee is necessary.

The Office of Patent Publication is directed to issue duplicate Letters Patent.

A copy of this decision is being forwarded to the Office of Patent Publication for issuance of duplicate Letters Patent. The patent file is being forwarded to the Files Repository.

Any questions concerning this matter may be directed to the Office of Patent Publication at (703) 308-6789.

Christina Tartera Donnell

Christina Tartera Donnell
Senior Petitions Attorney
Office of Petitions
(703) 306-5589

cc: Krystal Paige, Crystal Park 3-920 (FAX 703-746-4642)

UNITED STATES PATENT AND TRADEMARK OFFICE

COMMISSIONER FOR PATENTS
UNITED STATES PATENT AND TRADEMARK OFFICE
WASHINGTON, D.C. 20231
www.uspto.gov

JJGJr: 07-02

Paper No. 9

KNOBBE MARTENS OLSON & BEAR LLP
620 NEWPORT CENTER DRIVE
SIXTEENTH FLOOR
NEWPORT BEACH CA 92660

COPY MAILED

AUG 0 5 2002

OFFICE OF PETITIONS

In re Application of
Omatsu, et al.
Application No. 09/871,752
Filed: 1 June, 2001
Attorney Docket No.: SAEGU82.001AUS

DECISION ON PETITION

This is a decision on the petition filed on 12 April, 2002, styled "Petition for Notice of Incomplete Reply (Nonprovisional)" and considered under 37 C.F.R. §1.53 requesting that page 4 of the specification of the above-identified non-provisional application be accorded a filing date of 1 June, 2001.

The petition under 37 C.F.R. §1.53 is **GRANTED**.

The application was originally deposited (via Express Mail Label No EL721615030US) in Japanese on 1 June, 2001, and the filing perfected certified copies of the Japanese application on 16 July, 2001, and an English translation on 16 January, 2002.

The application as filed on 1 June, 2001, in Japanese consisted, *inter alia*, of 16 pages of specification and this converted in the 16 January, 2002, filing to an "English translation of the specification in 31 pages" consecutively numbered.

The Office mailed, *inter alia*, on 11 March, 2002, a "Notice of Incomplete Reply (Nonprovisional)" in which Petitioner was informed that page 4 of the specification (description and claims) appeared to have been omitted from the application. The Notice further indicated that the Applicant must respond within two months of the Notice mail date.

Petitioner filed on 12 April, 2002, a response with the instant petition, a copy of the Office-stamped filing receipt card, a copy a document purporting to be the entire English translation, including page 4 of the specification (description and claims), a check in payment of the $130.00 petition fee.

The copy of the date stamped (16 January, 2002) receipt card (with without the Office bar

code/application number) filed with the instant petition indicates that the English translation of the application was filed with, *inter alia*, 31 pages of specification, including claims and abstract.

Because the return postcard receipt properly itemizes the contents of the application package in accordance with MPEP §503, the Office concludes that pages 1-138 of specification (description and claims), including page 4, were filed on 16 January, 2002, perfecting the Japanese-language filing on 1 June, 2001, and that the page 4 was subsequently misplaced in the Office.

Accordingly, the petition is **granted**.[1]

The Notice mailed on 11 March, 2002, hereby is withdrawn to the extent that it addresses the alleged omission of page 4 of the (English translation of the) specification.

This application is being forwarded to the Office of Initial Patent Examination for further processing with a filing date of 1 June, 2001, using pages 1- 3 and 5 - 31 of the English translation of the specification (claims and abstract) filed on 1 June, 2001, and the page 4 supplied on 12 April, 2002, with an indication on the PALM bib data sheet that pages 1 - 31 of the English translation of the specification (description, claims and abstract) were present on filing.

Telephone inquiries concerning this matter may be directed to John J. Gillon, Jr., Senior Attorney, Office of Petitions, at (703)305-9199.

John J. Gillon, Jr.
Senior Attorney
Office of Petitions
Office of the Deputy Commissioner
for Patent Examination Policy

Beverly M. Flanagan
Supervisory Petitions Examiner
Office of Petitions
Office of the Deputy Commissioner
for Patent Examination Policy

[1] Pursuant to Petitioner's authorization, the petition fee ($130.00) is being refunded to Deposit Account 11-1410.

UNITED STATES PATENT AND TRADEMARK OFFICE

COMMISSIONER FOR PATENTS
UNITED STATES PATENT AND TRADEMARK OFFICE
P.O. BOX 1450
ALEXANDRIA, VA 22313-1450
www.uspto.gov

SEP 16 2004

In re Application of	:	
Omatsu, Takeshi	:	NOTICE OF WITHDRAWAL
Serial No. 09/871,752	:	FROM ISSUE
Filed: June 1, 2001	:	UNDER 37 CFR 1.313(b)
For: OZONE INDICATOR AND METHOD OF	:	
MEASURING OZONE CONCENTRATION	:	

The above-identified application is withdrawn from issue after payment of the issue fee due to reopening of prosecution. See 37 CFR 1.313 (b).

The above-identified application is hereby withdrawn from issue.

The issue fee is refundable upon written request. If, however, the application is again found allowable, the issue fee can be applied toward payment of the issue fee in the amount identified on the new Notice of Allowance and Issue Fee Due upon written request. This request and any balance due must be received on or before the due date noted in the new Notice of Allowance in order to prevent abandonment of the application.

Telephone inquiries should be directed to Jill Warden (571) 272-1267.

The above-identified application is being forwarded to the examiner for prompt appropriate action, including notifying applicant of the new status of this application.

JMStone

Jacqueline Stone, Director
Technology Center 1700
Chemical and Materials Engineering

KNOBBE MARTENS OLSON & BEAR LLP
2040 MAIN STREET
FOURTEENTH FLOOR
IRVINE CA 92614

cc: Niomi Farmer
Tamara Greene
Mary McAskill

UNITED STATES PATENT and TRADEMARK OFFICE
UNDER SECRETARY OF COMMERCE FOR INTELLECTUAL PROPERTY AND
DIRECTOR OF THE UNITED STATES PATENT AND TRADEMARK OFFICE
WASHINGTON, D.C. 20231
WWW.USPTO.GOV

Mailed: MAR - 4 2003

RPG

Paper No. 9

In re application of:
Anthony M. Mazany et al.
Serial No. 09/871,765
Filed: June 1, 2001
For: INORGANIC MATRIX COMPOSITIONS COMPOSITES AND PROCESS OF MAKING THE SAME

DECISION ON PETITION

This is a decision on the PETITION TO WITHDRAW HOLDING OF ABANDONMENT, filed December 24, 2002 for failure to respond to the office action dated May 15, 2002. Applicants assert that a response was timely filed on June 14, 2002.

DECISION

Since petitioner asserts that the papers were filed in a timely manner, the request is accepted as a petition under 37 C.F.R. 1.181 (no fee). A review of the petitioner's evidence provided with the instant petition indicates that the request has merit. A copy of the response was mailed and received by the U.S. Patent and Trademark Office on June 20, 2002. The evidence to support is a date stamped post card receipt from the USPTO.

Therefore, the Notice of Abandonment dated December 19, 2002 is hereby withdrawn. Hence, the case is returned to pending status. The application shall be returned to the LIE for entering of the response. After such is completed, the case will then be forwarded to the examiner for prompt consideration.

The Petition is **GRANTED**.

Jacqueline Stone, Director
Technology Center 1700
Chemical and Materials Engineering

Brouse McDowell
Intellectual Property Group
500 First National Tower
Akron, Ohio 44308

UNITED STATES PATENT AND TRADEMARK OFFICE

Commissioner for Patents
United States Patent and Trademark Office
P.O. Box 1450
Alexandria, VA 22313-1450
www.uspto.gov

HUDAK SHUNK & FARINE CO LPA
2020 FRONT STREET, SUITE 307
CUYAHOGA FALLS, OH 44221

COPY MAILED

AUG 16 2004

OFFICE OF PETITIONS

In re Application of	:	
Anthony M. Mazany et al	:	
Application No. 09/871,765	:	DECISION GRANTING PETITION
Filed: June 1, 2001	:	UNDER 37 CFR 1.313(c)(2)
Attorney Docket No. 200EP006-1001	:	

This is a decision on the petition, filed August 13, 2004, under 37 CFR 1.313(c)(2) to withdraw the above-identified application from issue after payment of the issue fee.

The petition is **GRANTED**.

The above-identified application is withdrawn from issue for consideration of a submission under 37 CFR 1.114 (request for continued examination). See 37 CFR 1.313(c)(2).

Petitioner is advised that the issue fee paid on May 28, 2004 in the above-identified application cannot be refunded. If, however, the above-identified application is again allowed, petitioner may request that it be applied towards the issue fee required by the new Notice of Allowance.[1]

Telephone inquiries should be directed to the undersigned at (703) 305-8680.

This matter is being referred to Technology Center AU 1755 for processing of the request for continued examination under 37 CFR 1.114 and for consideration of the concurrently filed Information Disclosure Statement.

Frances Hicks

Frances Hicks
Petitions Examiner
Office of Petitions
Office of the Deputy Commissioner
for Patent Examination Policy

---

[1] The request to apply the issue fee to the new Notice may be satisfied by completing and returning the new Issue Fee Transmittal Form PTOL-85(b), which includes the following language thereon: "Commissioner for Patents is requested to apply the Issue Fee and Publication Fee (if any) or re-apply any previously paid issue fee to the application identified above." Petitioner is advised that, whether a fee is indicated as being due or not, the Issue Fee Transmittal Form **must** be completed and timely submitted to avoid abandonment. Note the language in bold text on the first page of the Notice of Allowance and Fee(s) Due (PTOL-85).

UNITED STATES PATENT AND TRADEMARK OFFICE

Commissioner for Patents
United States Patent and Trademark Office
P.O. Box 1450
Alexandria, VA 22313-1450
www.uspto.gov

KLEHR , HARRISON ET AL
260 S. BROAD STREET
PHILADELPHIA PA 19102

COPY MAILED

JUN 0 3 2008

OFFICE OF PETITIONS

In re Application of	:	
Roy RICHARDSON et al.	:	
Application No. 09/871,774	:	DECISION ON PETITION
Filed: June 01, 2001	:	
Attorney Docket No. 1410-00	:	

This is a decision on the petition under the unintentional provisions of 37 CFR 1.137(b), filed November 06, 2007, to revive the above-identified application.

The petition is **GRANTED**.

The application became abandoned for failure to timely reply within the meaning of 37 CFR 1.113 to the final Office action, mailed April 03, 2007, which set a shortened statutory period for reply of three (3) months. A three (3) month extension of time under the provisions of 37 CFR 1.136(a) was obtained. Accordingly, the application became abandoned on October 04, 2007.

The petition satisfies the requirements of 37 CFR 1.137(b) in that petitioner has supplied (1) the reply in the form of an amendment, (2) the petition fee of $770, and (3) a proper statement of unintentional delay. Accordingly, the reply to the final Office Action of September 27, 2006 is accepted as having been unintentionally delayed.

Telephone inquiries concerning this decision should be directed to Tredelle Jackson at (571) 571-272-2783.

This application is being referred to Technology Center AU 1797 for appropriate action on the concurrently filed amendment.

Ramesh Krishnamurthy

Ramesh Krishnamurthy
Petitions Examiner
Office of Petitions

OK to enter upon revival

MRC
4/17/08

Appln. No. 09/871,774
Date of Response: November 5, 2007
Final Office Action Dated: April 3, 2007

RECEIVED
CENTRAL FAX CENTER
NOV 06 2007

IN THE UNITED STATES PATENT AND TRADEMARK OFFICE

Art Unit : 1744
Examiner : Monzer R. Chorbaji
Serial No. : 09/871,774
Filed : 06/01/2001
Inventors : Roy Richardson et al.
Title : METHOD AND APPARATUS FOR
: TREATING GOODS

Docket No.: 14662-0001
Confirmation No.: 3000

AMENDMENT AFTER FINAL ACTION PURSUANT TO 37 CFR § 1.116

Mail Stop AF
Commissioner for Patents
P.O. Box 1450
Alexandria, VA 22313-1450

SIR:

This is in response to the Final Office Action mailed April 3, 2007. Filed on October 3, 2007, was a Petition under 37 CFR §1.136(a) requesting a three (3) month extension of time to respond to the Official Action (and the requisite fee), thereby extending the time for response thereto up to and including October 3, 2007. However, Applicant failed to timely file a proper reply to the Office letter mailed on April 3, 2007 and a Notice of Abandonment issued on October 29, 2007. Two typographical errors in the proposed reply filed on October 3, 2007 were the cause of the improper reply and are corrected herein, thereby placing the application in condition for allowance. A Petition to Revive the application is concurrently filed herewith.

Except for the Petition to Revive fee, no additional fee is believed to be due, since the extension fee has already been paid. However, should a fee be due, the Commissioner is hereby authorized to charge the requisite fees, or credit any overpayment, to Deposit Account No. 50-1555.

PHIL1 758473-1

PAGE 6/15 * RCVD AT 11/6/2007 2:25:52 PM [Eastern Standard Time] * SVR:USPTO-EFXRF-6/7 * DNIS:2738300 * CSID:2155686603 * DURATION (mm-ss):04-06

Applicant respectfully requests entry of the following amendments into the above-identified application. Each of the amendments finds full support in the claims, specification and/or drawings as filed.

Amendments to claims begin on page 3.

Remarks begin on page 8.

PAGE 7/15 * RCVD AT 11/6/2007 2:25:52 PM [Eastern Standard Time] * SVR:USPTO-EFXRF-6/7 * DNIS:2738300 * CSID:2155686603 * DURATION (mm-ss):04-06

UNITED STATES PATENT AND TRADEMARK OFFICE

Commissioner for Patents
United States Patent and Trademark Office
P.O. Box 1450
Alexandria, VA 22313-1450
www.uspto.gov

JJGJR.: 06-06

Paper No: __

TEXAS INSTRUMENTS
INCORPORATED
P O BOX 655474, M/S 3999
DALLAS TX 75265

COPY MAILED

JUN 27 2006

OFFICE OF PETITIONS

In re Application of	:	
Kosanovic	:	
Application No. 09/871,776	:	DECISION
Filing Date: 6 January, 2001	:	
Attorney Docket No.: TI-32145	:	

This is a decision on the petition filed on 25 and 30 May, 2006, alleging unintentional delay under 37 C.F.R. §1.137(b).

For the reasons set forth below, the petition under 37 C.F.R.§1.137(b) is **GRANTED**.

BACKGROUND

The record reflects that:

- Petitioner failed to reply timely and properly to the Notice of Drawing Inconsistency mailed on 18 January, 2006, with reply due under a non-extendable deadline on or before Monday, 20 February, 2006;
- the instant application went abandoned after midnight18 February, 2006;
- Petitioner filed the required drawings on 16 March, 2006, and improvidently sought extension of time within which to file;

- the Office mailed a Notice of Abandonment on 20 May, 2006;
- Petitioner filed the petition (with fee), pointed to the drawings, previously filed, as the reply and made the statement of unintentional delay–thus Petitioner appears to have satisfied the requirements under 37 C.F.R. §1.137(b);
- out of an abundance of caution, Petitioners always are reminded that those registered to practice *and* all others who make representations before the Office are reminded to inquire into the underlying facts of representations made to the Office and support averments with the appropriate documentation–since all owe to the Office the continuing duty to disclose.[1]

---

[1] See supplement of 17 June, 1999. The Patent and Trademark Office is relying on petitioner's duty of candor and good faith and accepting a statement made by Petitioner. See Changes to Patent Practice and Procedure, 62 Fed. Reg. at 53160 and 53178, 1203 Off. Gaz. Pat. Office at 88 and 103 (responses to comments 64 and 109)(applicant obligated under 37 C.F.R. §10.18 to inquire into the underlying facts and circumstances when providing statements to the Patent and Trademark Office).

Specifically, the regulations at 37 C.F.R. §10.18 provide:

§ 10.18 Signature and certificate for correspondence filed in the Patent and Trademark Office.
(a) For all documents filed in the Office in patent, trademark, and other non-patent matters, except for correspondence that is required to be signed by the applicant or party, each piece of correspondence filed by a practitioner in the Patent and Trademark Office must bear a signature by such practitioner complying with the provisions of §1.4(d), §1.4(e), or § 2.193(c)(1) of this chapter.
(b) By presenting to the Office (whether by signing, filing, submitting, or later advocating) any paper, the party presenting such paper, whether a practitioner or non-practitioner, is certifying that—

(1) All statements made therein of the party's own knowledge are true, all statements made therein on information and belief are believed to be true, and all statements made therein are made with the knowledge that whoever, in any matter within the jurisdiction of the Patent and Trademark Office, knowingly and willfully falsifies, conceals, or covers up by any trick, scheme, or device a material fact, or makes any false, fictitious or fraudulent statements or representations, or makes or uses any false writing or document knowing the same to contain any false, fictitious or fraudulent statement or entry, shall be subject to the penalties set forth under 18 U.S.C. 1001, and that violations of this paragraph may jeopardize the validity of the application or document, or the validity or enforceability of any patent, trademark registration, or certificate resulting therefrom; and

(2) To the best of the party's knowledge, information and belief, formed after an inquiry reasonable under the circumstances, that —

(i) The paper is not being presented for any improper purpose, such as to harass someone or to cause unnecessary delay or needless increase in the cost of prosecution before the Office;

(ii) The claims and other legal contentions therein are warranted by existing law or by a nonfrivolous argument for the extension, modification, or reversal of existing law or the establishment of new law;

(iii) The allegations and other factual contentions have evidentiary support or, if specifically so identified, are likely to have evidentiary support after a reasonable opportunity for further investigation or discovery; and

(iv) The denials of factual contentions are warranted on the evidence, or if specifically so identified, are reasonably based on a lack of information or belief.

(c) Violations of paragraph (b)(1) of this section by a practitioner or non-practitioner may jeopardize the validity of the application or document, or the validity or enforceability of any patent, trademark registration, or certificate resulting therefrom. Violations of any of paragraphs (b)(2)(i) through (iv) of this section are, after notice and reasonable opportunity to respond, subject to such sanctions as deemed appropriate by the Commissioner, or the Commissioner's designee, which may include, but are not limited to, any combination of —

(1) Holding certain facts to have been established;
(2) Returning papers;
(3) Precluding a party from filing a paper, or presenting or contesting an issue;
(4) Imposing a monetary sanction;
(5) Requiring a terminal disclaimer for the period of the delay; or
(6) Terminating the proceedings in the Patent and Trademark Office.

(d) Any practitioner violating the provisions of this section may also be subject to disciplinary action. See § 10.23(c)(15).
[Added 50 FR 5175, Feb. 6, 1985, effective Mar. 8, 1985; para. (a) revised, 58 FR 54494, Oct. 22, 1993, effective Nov. 22, 1993; paras. (a) & (b) revised, paras. (c) & (d) added, 62 FR 53131, Oct. 10, 1997, effective Dec. 1, 1997; para. (a) revised, 69 FR 56481, Sept. 21, 2004, effective

STATUTES, REGULATIONS AND ANALYSIS

Congress has authorized the Commissioner to "revive an application if the delay is shown to the satisfaction of the Commissioner to have been "unavoidable." 35 U.S.C. §133 (1994).[2]

The regulations at 37 C.F.R. §1.137(a) and (b) set forth the requirements for a petitioner to revive a previously unavoidably or unintentionally, respectively, abandoned application under this congressional grant of authority. The language of 35 U.S.C. §133 and 37 C.F.R. §1.137(a) is clear, unambiguous, and without qualification: the delay in tendering the reply to the outstanding Office action, as well as filing the first petition seeking revival, must have been unavoidable for the reply now to be accepted on petition.[3]

Delays in responding properly raise the question whether delays are unavoidable.[4] Where there is a question whether the delay was unavoidable, Petitioners must meet the burden of establishing that the delay was unavoidable within the meaning of 35 U.S.C. §133 and 37 C.F.R. §1.137(a).[5] And the Petitioner must be diligent in attending to the matter.[6] Failure to do so does not constitute the care required under Pratt, and so cannot satisfy the test for diligence and due care.

(By contrast, unintentional delays are those that do not satisfy the very strict statutory and regulatory requirements of unavoidable delay, and also, by definition, are not intentional.[7]))

Oct. 21, 2004]

[2] 35 U.S.C. §133 provides:
35 U.S.C. §133 Time for prosecuting application.
Upon failure of the applicant to prosecute the application within six months after any action therein, of which notice has been given or mailed to the applicant, or within such shorter time, not less than thirty days, as fixed by the Commissioner in such action, the application shall be regarded as abandoned by the parties thereto, unless it be shown to the satisfaction of the Commissioner that such delay was unavoidable.

[3] Therefore, by example, an unavoidable delay in the payment of the Filing Fee might occur if a reply is shipped by the US Postal Service, but due to catastrophic accident, the delivery is not made.

[4] See: *Changes to Patent Practice and Procedure*; *Final Rule Notice*, 62 *Fed. Reg.* at 53158-59 (October 10, 1997), 1203 *Off. Gaz. Pat. Office* at 86-87 (October 21, 1997).

[5] See: In re Application of G, 11 USPQ2d 1378, 1380 (Comm'r Pats. 1989).

[6] See: Diligence in Filing Petitions to Revive and Petitions to Withdraw the Holding of Abandonment, 1124 Off. Gaz. Pat. Office 33 (March 19, 1991). It was and is Petitioner's burden to exercise diligence in seeking either to have the holding of abandonment withdrawn or the application revived. See 1124 Off. Gaz. Pat. Office supra.

[7] Therefore, by example, an unintentional delay in the reply might occur if the reply and transmittal form are to be prepared for shipment by the US Postal Service, but other pressing matters distract one's attention and the mail is not timely deposited for shipment.

As to the Allegations
of Unintentional Delay

The requirements for a grantable petition under 37 C.F.R. §1.137(b) are the petition and fee, a statement/showing of unintentional delay, a proper reply, and–where appropriate--a terminal disclaimer and fee.

Petitioner appears to have satisfied the regulatory requirements.

CONCLUSION

The petition under 37 C.F.R. §1.137(b) hereby is **granted**.

The instant application is released to Publications Branch to be processed into a patent in due course.

Telephone inquiries concerning this decision may be directed to the undersigned at (571) 272-3214.

John J. Gillon, Jr.
Senior Attorney
Office of Petitions

UNITED STATES PATENT AND TRADEMARK OFFICE

Commissioner for Patents
United States Patent and Trademark Office
P.O. Box 1450
Alexandria, VA 22313-1450
www.uspto.gov

FISH & RICHARDSON P.C.
1425 K STREET, N.W.
11TH FLOOR
WASHINGTON DC 20005-3500

COPY MAILED

APR 2 5 2005

OFFICE OF PETITIONS

ON PETITION

In re Application of :
Shunpei Yamazaki :
Application No. 09/871,805 :
Filed: June 4, 2001 :
Attorney Docket No. 12732-049001 :

This is a decision on the petition, filed April 22, 3005, under 37 CFR 1.313(c)(2) to withdraw the above-identified application from issue after payment of the issue fee.

The petition is **GRANTED**.

The above-identified application is withdrawn from issue for consideration of a submission under 37 CFR 1.114 (request for continued examination). See 37 CFR 1.313(c)(2).

Petitioner is advised that the issue fee paid on March 29, 2005 in the above-identified application cannot be refunded. If, however, the above-identified application is again allowed, petitioner may request that it be applied towards the issue fee required by the new Notice of Allowance.[1]

Telephone inquiries should be directed to the undersigned at (571) 272-3208.

The examiner of Technology Center AU 2879 will consider the request for continued examination under 37 CFR 1.114.

Karen Creasy

Karen Creasy
Petitions Examiner
Office of Petitions
Office of the Deputy Commissioner
for Patent Examination Policy

---

[1] The request to apply the issue fee to the new Notice may be satisfied by completing and returning the new Issue Fee Transmittal Form PTOL-85(b), which includes the following language thereon: "Commissioner for Patents is requested to apply the Issue Fee and Publication Fee (if any) or re-apply any previously paid issue fee to the application identified above." Petitioner is advised that, whether a fee is indicated as being due or not, the Issue Fee Transmittal Form **must** be completed and timely submitted to avoid abandonment. Note the language in bold text on the first page of the Notice of Allowance and Fee(s) Due (PTOL-85).

Copied from 10694538 on 06/02/2005

UNITED STATES PATENT AND TRADEMARK OFFICE

Commissioner for Patents
United States Patent and Trademark Office
P.O. Box 1450
Alexandria, VA 22313-1450
www.uspto.gov

FISH & RICHARDSON P.C.
P.O. BOX 1022
MINNEAPOLIS MN 55440-1022

COPY MAILED
MAY 25 2006
OFFICE OF PETITIONS

In re Application of	:	
Shunpei Yamazaki	:	
Application No. 09/871,805	:	ON PETITION
Filed: June 4, 2001	:	
Attorney Docket No. 12732-049001	:	

This is a decision on the petition, filed May 24, 2006, under 37 CFR 1.313(c)(2) to withdraw the above-identified application from issue after payment of the issue fee.

The petition is **GRANTED.**

The above-identified application is withdrawn from issue for consideration of a submission under 37 CFR 1.114 (request for continued examination). See 37 CFR 1.313(c)(2).

Petitioner is advised that the issue fee paid on May 8, 2006, in the above-identified application cannot be refunded. If, however, the above-identified application is again allowed, petitioner may request that it be applied towards the issue fee required by the new Notice of Allowance.[1]

Telephone inquiries should be directed to the undersigned at (571) 272-3208.

The examiner of Technology Center AU 2879 will consider the request for continued examination under 37 CFR 1.114.

Karen Creasy
Petitions Examiner
Office of Petitions

---

[1] The request to apply the issue fee to the new Notice may be satisfied by completing and returning the new Issue Fee Transmittal Form PTOL-85(b), which includes the following language thereon: "Commissioner for Patents is requested to apply the Issue Fee and Publication Fee (if any) or re-apply any previously paid issue fee to the application identified above." Petitioner is advised that, whether a fee is indicated as being due or not, the Issue Fee Transmittal Form **must** be completed and timely submitted to avoid abandonment. Note the language in bold text on the first page of the Notice of Allowance and Fee(s) Due (PTOL-85).

UNITED STATES PATENT AND TRADEMARK OFFICE

Commissioner for Patents
United States Patent and Trademark Office
P.O. Box 1450
Alexandria, VA 22313-1450
www.uspto.gov

FINNEGAN, HENDERSON, FARABOW,
GARRETT & DUNNER LLP
901 NEW YORK AVENUE, NW
WASHINGTON DC 20001-4413

COPY MAILED

JAN 16 2007

OFFICE OF PETITIONS

In re Patent of Gondouin	:	
Patent No. RE38,642	:	
Issue Date: November 2, 2004	:	Decision on Petition
Application No. 09/871,813	:	
Filing Date: June 4, 2001	:	
Attorney Docket No. 02376.0006-02000	:	

This is a decision in response to the petition under 37 CFR 1.377 filed December 19, 2006, requesting the Office determine the instant patent is not expired.

The petition is **GRANTED.**

Facts:

Application No. 07/814,585 issued as Patent No. 5,462,120 on October 31, 1995.

Petitioner filed Reissue Application No. 08/861,457 on May 22, 1997.

The 3.5 year maintenance fee was timely paid for Patent No. 5,462,120 on April 16, 1999.

Petitioner filed four continuation applications based on Application No. 08/861,457:
(1) 09/824,738 filed April 4, 2001,
(2) 09/871,813 filed June 4, 2001,
(3) 09/944,115 filed September 4, 2001, and
(4) 09/956,806 filed September 21, 2001.

Reissue Application No. 08/861,457 issued as Reissue Patent No. RE37,867 on October 8, 2002.

The 7.5 year maintenance fee and surcharge were paid on June 6, 2003, for RE37,867.

Reissue Application No. 09/824,738 issued as Reissue Patent No. RE38,636 on October 26, 2004.

Reissue Application No. 09/871,813 issued as Reissue Patent No. RE38,642 on November 2, 2004.

Reissue Application No. 09/944,115 issued as Reissue Patent No. RE38,616 on October 12, 2004.

Reissue Application No. 11/038,005 was filed as a continuation of Reissue Application No. 09/956,806 on April 8, 2005. The application is currently pending.

Reissue Application No. 09/956,806 issued as Reissue Patent No. RE39,141 on June 27, 2006.

Discussion:

A review of the facts demonstrates the instant patent is not, and has never been, expired. To the extent any Office records have indicated the patent is expired, the records are hereby vacated.

The Office will schedule a refund of the $200 petition fee.

PTO records will be updated to indicate the patent has not expired.

As a courtesy, the Office will now discuss the payment of the 11.5 year maintenance fee.

Per the MPEP, when a reissue patent issues based on an original patent, maintenance fee payments should be made for the reissue patent based on the schedule established for the original patent. The MPEP states a maintenance fee does not have to be paid for subsequent reissue patents. MPEP 501 states, "No payment of additional maintenance fees is required for second or subsequent reissue patents, i.e., continuation or divisional reissues (see MPEP 1451), which are derived from a first reissue patent which has issued."

Unfortunately, the Office finance system, RAM, currently updates multiple reissue patents only if the payment is made in the most recent reissue patent to be issued. If petitioner complies with the MPEP, and the Office employee who process the fee fails to recognize the need to move the fee to the newest reissue patent in RAM, problems may arise. Therefore, the Office of Petitions strongly suggests petitioner pay the 11.5 year fee for Reissue Patent No. RE39,141. However, if a reissue patent based on Reissue Application No. 11/038,005 issues prior to payment of the 11.5 year maintenance fee, then the 11.5 year fee should be applied towards the new reissue patent.

Telephone inquiries regarding this communication should be directed to Petitions Attorney Steven Brantley at (571) 272-3203.

Charles Steven Brantley
Senior Petitions Attorney
Office of Petitions

UNITED STATES PATENT AND TRADEMARK OFFICE

Commissioner for Patents
United States Patent and Trademark Office
P.O. Box 1450
Alexandria, VA 22313-1450
www.uspto.gov

6/15/07

Patent No. : 7,107,319 B2
Issue Date : September 12, 2006
Ser. No. : 09/871,853
Inventor(s) : Chandrasekaran, et al.
Title : METHOD AND AND APPARATUS FOR REDUCING LATENCY AND MESSAGE TRAFFIC DURING DATA AND LOCK TRANSFER IN A MULTI-NODE SYSTEM

Re: Request for Certificate of Correction

Consideration has been given your request for the issuance of a certificate of correction for the above-identified patent under the provisions of Rule(s) 1.322 and/or 1.323.

Assignees' names and addresses (assignment data) printed in a patent, are based *solely* on information supplied in the appropriate space for identifying the assignment data, i.e., item 3 of the Issue Fee Transmittal Form PTOL-85B. Granting of a request under 37 CFR 3.81(b) is required to correct applicant's error providing ***incorrect or erroneous*** assignment data, *before* issuance of a Certificate of Correction, under 37 CFR 1.323 *(see Manual of Patent Examining Procedures (M.P.E.P) Chp.1400, sect. 1481).* This procedure is required *at any time after the issue fee is paid*, including after issuance of the patent.

In view of the foregoing, your request is hereby denied.

A request to correct the Assignee under 37 CFR 3.81(b) should include:

A. **the processing fee set forth in 37 CFR 1.117(h) (currently $130);**
B. a statement that the failure to include the correct assignee name on the PTOL-85B was inadvertent; and
C. a copy of the Notice of Recordation of Assignment Document, reflecting the reel and frame number where the assignment(s) is recorded and/or reflecting proof of *the date* the assignment was submitted for recordation.

In the Request, Applicant(s) may request that the file be forwarded to Certificates of Correction Branch, for issuance of a Certificate of Correction, if the Request is granted.

Any request under 37 CFR 3.81(b) should be directed to the following address or facsimile number:

By mail: Mail Stop PETITIONS
Commissioner for Patents
Post Office Box 1450
Alexandria, VA 22313-1450

By hand: Customer Service Window
Mail Stop Petitions
Randolph Building
401 Dulany Street
Alexandria, VA 22314

By fax: (571) 272-3218
ATTN: Office of Petitions

If a fee (currently $100) was previously submitted for consideration of a Request for Certificate of Correction, under CFR 1.323, to correct assignment data, no additional fee is required.

Valerie Jackson
For Cecelia Newman
Decisions & Certificates
of Correction Branch
(703) 308-9390 ext. 114

Hickman Palermo Truong & Becker LLP
2055 Gateway Place, Suite 550
San Jose, CA 95110

vj/CBN

UNITED STATES PATENT AND TRADEMARK OFFICE

Commissioner for Patents
United States Patent and Trademark Office
P.O. Box 1450
Alexandria, VA 22313-1450
www.uspto.gov

COPY MAILED

NOV 30 2007

OFFICE OF PETITIONS

HICKMAN PALERMO TRUONG & BECKER/ ORACLE
2055 GATEWAY PLACE, SUITE 550
SAN JOSE, CA 95110-1089

In re Patent No. 7,107,319	:	
Issue Date: September 12, 2006	:	
Application No. 09/871,853	:	ON PETITION
Filed: May 31, 2001	:	
Attorney Docket No. 50277-1653	:	

This is a decision on the petition filed June 26, 2007, which is being treated as a petition under 37 CFR 3.81(b)[1] to correct assignee's name on the front page of the above-identified patent by way of a Certificate of Correction.

The petition is **granted.**

Telephone inquiries concerning this matter may be directed to the undersigned at (571) 272-3210. Any questions concerning the issuance of the Certificate of Correction should be directed to the Certificates of Correction Branch at (703) 305-8309.

This application is being forwarded to the Certificates of Correction Branch for issuance of the requested Certificate of Correction.

Irvin Dingle
Petitions Examiner
Office of Petitions

[1] See Official Gazette of June 22, 2004

UNITED STATES PATENT AND TRADEMARK OFFICE

Commissioner for Patents
United States Patent and Trademark Office
P.O. Box 1450
Alexandria, VA 22313-1450
www.uspto.gov

HOWISON & ARNOTT, L.L.P
P.O. BOX 741715
DALLAS, TX 75374-1715

COPY MAILED
OCT 2 4 2006
OFFICE OF PETITIONS

In re Application of	:	
BEDOS, et al.	:	
Application No. 09/871,861	:	DECISION ON PETITION
Filed: June 01, 2001	:	TO WITHDRAW
Attorney Docket No. 10984.4US01	:	FROM RECORD
	:	

This is a decision on the Request to Withdraw as attorney or agent of record under 37 C.F.R. § 1.36(b), filed July 18, 2006.

The request is **APPROVED**.

A grantable request to withdraw as attorney/agent of record must be signed by every attorney/agent seeking to withdraw or contain a clear indication that one attorney is signing on behalf of another/others. A request to withdraw will not be approved unless at least 30 (thirty) days would remain between the date of approval and the later of the expiration date of a time to file a response or the expiration date of the maximum time period which can be extended under 37 C.F.R. § 1.136(a).

The request was signed by Brian D. Walker on behalf of all attorneys of record who are associated with customer number 25883.

Applicant is reminded that there is no attorney of record at this time.

All future correspondence will be directed to the first named signing inventor Thierry Bedos at the address indicated below.

A Review of the file discloses that a final Office action was mailed on August 10, 2006, which set forth a three month shortened statutory period for reply. Extensions of time under 37 CFR 1.136(a) are available. To date, there is no indication that a reply to the Office action of August 10, 2006 has been received.

Telephone inquiries concerning this decision should be directed to Patricia Volpe at 571-272-6825.

David Bucci
Petitions Examiner
Office of Petitions

cc: Thierry Bedos
62 Farrer Road #01-03 Spanish Village
Singapore, 268847
SINGAPORE

UNITED STATES PATENT AND TRADEMARK OFFICE

COMMISSIONER FOR PATENTS
UNITED STATES PATENT AND TRADEMARK OFFICE
WASHINGTON, D.C. 20231
www.uspto.gov

Paper No. 5

PATENT ADMINISTRATOR
TESTA HURWITZ & THIBEAULT
HIGH STREET TOWER
125 HIGH STREET
BOSTON, MA 02110

COPY MAILED

OCT 0 9 2001

OFFICE OF PETITIONS

In re Application of
Sohrab Mansouri
Application No. 09/871,885
Filed: May 31, 2001
Attorney Docket No. INL-052(4643/94)

DECISION GRANTING PETITION

This is a decision on the petition under 37 CFR 1.10(c) filed September 4, 2001, requesting that the above-identified application be accorded a filing date of May 31, 2001, rather than the presently accorded filing date of June 1, 2001.

petitioners allege that the application was deposited in "Express Mail" service with the U.S. Postal Service, on May 31, 2001. In support, petitioners provided a copy of the Express Mail label, receipt no. EL816799015US, showing a Date-In of May 31, 2001. The same Express Mail receipt number was referred to in the copy of the original transmittal letter found in the present application. Petitioners request that the application be accorded a filing date of May 31, 2001.

The Office considers the date the paper or fee is shown to have been deposited as "Express Mail" to be the "Date In" on the Express Mail label, MPEP 513. That is the date that verifies that the package was actually mailed. In view of the above, the evidence is convincing that the application was deposited as "Express Mail" with the US Postal Service on May 31, 2001.

The petition is granted.

Receipt is acknowledged of the declaration filed August 31, 2001, in response to the Notice mailed August 1, 2001.

The application is being returned to Initial Patent Examination Division for further processing using the declaration filed August 31, 2001 and for correction of the filing date to May 31, 2001.

Telephone inquiries specific to this matter should be directed to Wan Laymon at (703) 306-5685.

Sherry Brinkley
Petitions Examiner
Office of Petitions
Office of the Deputy Commissioner
for Patent Examination Policy

UNITED STATES PATENT AND TRADEMARK OFFICE

Commissioner for Patents
United States Patent and Trademark Office
P.O. Box 1450
Alexandria, VA 22313-1450
www.uspto.gov

TESTA, HURWITZ & THIBEAULT, LLP
HIGH STREET TOWER
125 HIGH STREET
BOSTON, MA 02110

COPY MAILED

FEB 09 2005

OFFICE OF PETITIONS

In re Application of	:	
Clarke Xu, et. al.	:	
Application No. 09/871,885	:	ON PETITION
Filed: May 31, 2001	:	
Attorney Docket No. INL-052	:	

This is a decision on the petition under 37 CFR 1.182, filed January 16, 2002, to change the order of the inventor names.

The petition is **GRANTED**.

The order of inventor names will be changed as follows:

1. Clarke Xu

2. Sohrab Mansouri

3. Vasile Cosofret

The Office sincerely apologizes for the delay in responding to the instant petition, and any inconvenience caused to petitioner by this delay.

The above-identified application is being referred to the Office of Publications for further processing.

Telephone inquiries concerning this decision should be directed to Andrea Smith at (571) 272-3226.

Andrea Smith
Petitions Examiner
Office of Petitions
Office of the Deputy Commissioner
for Patent Examination Policy

Enclosure: Corrected Filing Receipt

UNITED STATES PATENT AND TRADEMARK OFFICE

COMMISSIONER FOR PATENTS
UNITED STATES PATENT AND TRADEMARK OFFICE
WASHINGTON, D.C. 20231
www.uspto.gov

HOGAN & HARTSON, LLP
500 S. GRAND AVENUE
SUITE 1900
LOS ANGELES, CA 90071-2611

Paper No. 3
COPY MAILED

DEC 0 6 2001

OFFICE OF PETITIONS

In re Application of
Tanimoto
Application No.: 09/871,888
Filed: May 31, 2001
Attorney Docket No. 81800.0157

: DECISION GRANTING
: PETITION

This is a decision on the petition entitled "REQUEST FOR CORRECTED FILING RECEIPT," filed August 15, 2001 (certificate of mailing date August 7, 2001), requesting that the above-identified application be accorded a filing date of May 31, 2001, instead of the presently accorded date of June 1, 2001, and that continuity data be corrected.

Petitioner alleges that the application was deposited in "Express Mail" service with the U. S. Postal Service, on May 31, 2001. In support, petitioner provided a copy of the Express Mail label, receipt no. EL713626591US, showing a Date-In of May 31, 2001. The same Express Mail receipt number was referred to in the original Application Transmittal Letter found in the application file. Petitioner requests that the application be accorded a filing date of May 31, 2001.

The Office considers the date the paper or fee is shown to have been deposited as "Express Mail" to be the "Date In" on the Express Mail label, MPEP 513. That is the date that verifies that the package was actually mailed. In view of the above, the evidence is convincing that the application was deposited as "Express Mail" with the US Postal Service on May 31, 2001.

In view of the above, the petition is granted.

As this is a feeless petition, no petition fee has been or will be charged.

The application will be returned to the Office of Initial Patent Examination for further processing with a filing date of May 31, 2001. The Office of Initial Patent Examination will mail a corrected filing receipt showing the filing date as May 31, 2001. Thereafter, the application will be forwarded to Technology Center 2600 for examination in due course.

Telephone inquiries concerning this matter should be directed to the undersigned at (703)308-6712

E. Shirene Willis

E. Shirene Willis
Petitions Attorney
Office of Petitions
Office of the Deputy Commissioner
for Patent Examination Policy

UNITED STATES PATENT AND TRADEMARK OFFICE

COMMISSIONER FOR PATENTS
UNITED STATES PATENT AND TRADEMARK OFFICE
WASHINGTON, D.C. 20231
www.uspto.gov

MAILED

JUL 2 4 2003

Technology Center 2100

Paper No. 3

Dr. Victoria Donnelly
Hazeldean R.P.O.
P.O. Box 24001
Kanata ON K2M 2C3 CA CANADA

In re Application of: Williams et al.	)	
Application No. 09/871,910	)	
Attorney Docket No. P-001	)	
Filed: June 4, 2001	)	**DECISION ON PETITION TO MAKE**
For: METHOD AND SYSTEM FOR	)	**SPECIAL UNDER 37 CFR §1.102(d)**
GENERATION VALUE ENHANCED	)	
DERIVATIVE DOCUMENT FROM A	)	
PATENT DOCUMENT	)	

This is a decision on the petition to make special, filed June 11, 2003 under 37 CFR §1.102(d).

The petition is **DISMISSED**.

Although the petition requests that the application be made special under 37 CFR §1.102(d), the petitioner has not specified under what section of MPEP § 708.02 the petition has been filed. The petition requests "Advanced Examination". For purposes of this decision, this is assumed to mean "Accelerated Examination", under MPEP § 708.02, Section VIII.

MPEP § 708.02, Section VIII, sets out the prerequisites to be met by applicant for a grantable petition for Accelerated Examination under 37 CFR §1.102(d), as follows:

> (A) Submits a petition to make special accompanied by the fee set forth in 37 CFR 1.17(h);
> (B) Presents all claims directed to a single invention, or if the Office determines that all the claims presented are not obviously directed to a single invention, will make an election without traverse as a prerequisite to the grant of special status.
> The election may be made by applicant at the time of filing the petition for special status. Should applicant fail to include an election with the original papers or petition and the Office determines that a requirement should be made, the established telephone restriction practice will be followed.
> If otherwise proper, examination on the merits will proceed on claims drawn to the elected invention.
> If applicant refuses to make an election without traverse, the application will not be further examined at that time. The petition will be denied on the ground that the claims are not directed to a single invention, and the application will await action in its regular turn.
> Divisional applications directed to the nonelected inventions will not automatically be given special status based on papers filed with the petition in the parent application. Each such application must meet on its own all requirements for the

new special status;
(C) Submits a statement(s) that a pre-examination search was made, listing the field of search by class and subclass, publication, Chemical Abstracts, foreign patents, etc. A search made by a foreign patent office satisfies this requirement;
(D) Submits one copy each of the references deemed most closely related to the subject matter encompassed by the claims if said references are not already of record; and
(E) Submits a detailed discussion of the references, which discussion points out, with the particularity required by 37 CFR 1.111 (b) and (c), how the claimed subject matter is patentable over the references.

The petition complies with item (A) mentioned above. However, the petition is deficient with respect to items (B), (C), (D) and (E) above:

(B) There is no statement that all the claims are directed to a single invention. Even so, there are several independent claims, each having a different scope, it will be up to the examiner to make such a determination. Applicant has made no provision for the possibility of a restriction requirement by the examiner. Applicant must provide the following statement as a prerequisite to a grant of special status: "If the Office determines that all claims presented are not obviously directed to a single invention, applicant will make an election without traverse and will follow established telephone restriction practice to make such an election if requested to do so."

(C) Although a search made by a foreign patent office satisfies this requirement, a copy the search mentioned in the petition, including class and subclass, publication, Chemical Abstracts, foreign patents, etc., has not been provided.

(D) No copies of references deemed most closely related to the subject matter encompassed by the claims have been submitted.

(E) Applicant has failed to provide a detailed discussion that points out, with the particularity required by 37 CFR 1.111(b) and (c), how the claimed subject matter is patentable over the references deemed most closely related to the subject matter encompassed by the claims.

Therefore, the Petition is **DISMISSED**. The application file will be forwarded to the Central Files of Technology Center 2100 to await examination in its proper turn based on its effective filing date. Petitioner is entitled to one opportunity to perfect the request in a renewed petition to make special. Any request for reconsideration must be filed within TWO MONTHS of the mailing date of this decision.

Josie A. Ballato
Special Programs Examiner
Technology Center 2100
Computer Architecture, Software, and Information Security
(703) 308-0269

BJP

UNITED STATES PATENT AND TRADEMARK OFFICE

COMMISSIONER FOR PATENTS
UNITED STATES PATENT AND TRADEMARK OFFICE
P.O. BOX 1450
ALEXANDRIA, VA 22313-1450
WWW.USPTO.GOV

Paper No. None

Dr. Victoria Donnelly
Hazeldean R.P.O.
P.O. Box 24001
Kanata ON K2M 2C3 CA CANADA

COPY MAILED

JUL 13 2007

OFFICE OF PETITIONS

In re Application of	:	
Allan Williams et al.	:	
Application No. 09/871,910	:	DECISION GRANTING
Filed: June 4, 2001	:	PETITION UNDER 37 C.F.R.
Attorney Docket No.: P-001	:	§1.137(b)
Title: METHOD AND SYSTEM FOR	:	
GENERATION VALUE ENHANCED	:	
DERIVATIVE DOCUMENT FROM A	:	
PATENT DOCUMENT	:	

This is a decision on the petition filed March 12, 2007, pursuant to 37 C.F.R. §1.137(b)[1], to revive the above-identified application.

A final Office action was mailed on January 12, 2006. On February 28, 2006, a notice of appeal was filed, and an appeal brief was filed on April 24, 2006. A notification of non-compliant appeal brief was mailed on July 6, 2006, which indicated that the appeal brief was defective. This mailing set a 30-day extendable period for response.

---

1 A grantable petition pursuant to 37 CFR 1.137(b) must be accompanied by:
(1) The reply required to the outstanding Office action or notice, unless previously filed;
(2) The petition fee as set forth in § 1.17(m);
(3) A statement that the entire delay in filing the required reply from the due date for the reply until the filing of a grantable petition pursuant to this paragraph was unintentional. The Commissioner may require additional information where there is a question whether the delay was unintentional, and;
(4) Any terminal disclaimer (and fee as set forth in § 1.20(d)) required pursuant to paragraph (d) of this section.

An amended appeal brief was filed on October 4, 2006, along with a two-month extension of time.

Consequently, the present application became abandoned for failure to reply in a timely and proper manner to the notification of July 6, 2006. No further extensions of time were requested. Accordingly, the above-identified application became abandoned on October 7, 2006. A notice of abandonment was mailed on January 17, 2007.

With the present petition, Petitioner has filed the petition fee, another appeal brief, and the proper statement of unintentional delay. A terminal disclaimer is not required.

The petition is **GRANTED**.

The Technology Center will be notified of this decision. The Technology Center's support staff will notify the Examiner of this decision, so that the appeal brief that was received with the present petition can be processed.

Telephone inquiries regarding *this decision* should be directed to the undersigned at (571) 272-3225[2]. All other inquiries concerning examination procedures or status of the application should be directed to the Technology Center.

Paul Shanoski
Senior Attorney
Office of Petitions
United States Patent and Trademark Office

---

2 Petitioner will note that all practice before the Office should be in writing, and the action of the Office will be based exclusively on the written record in the Office. See 37 C.F.R. §1.2. As such, Petitioner is reminded that no telephone discussion may be controlling or considered authority for Petitioner's further action(s).

UNITED STATES PATENT AND TRADEMARK OFFICE

COMMISSIONER FOR PATENTS
UNITED STATES PATENT AND TRADEMARK OFFICE
P.O. BOX 1450
ALEXANDRIA, VA 22313-1450
www.uspto.gov

VAN PELT, YI & JAMES LLP
10050 N. FOOTHILL BLVD #200
CUPERTINO, CA 95014

COPY MAILED

SEP 27 2007

OFFICE OF PETITIONS

In re Application of
Thomas P. Hommrich, et al.
Application No. 09/871,924
Filed: June 1, 2001
Attorney Docket No. ARIBP063

ON PETITION

This is a decision on the petition under 37 CFR 1.137(b), filed June 4, 2007, to revive the above-identified application.

The petition is **GRANTED**.

The application became abandoned for failure to timely file a reply within the meaning of 37 CFR 1.113 to an Office action mailed October 23, 2006. A Notice of Abandonment was mailed on June 1, 2007. On June 4, 2007, the present petition was filed.

The proposed reply required for consideration of a petition to revive must be a Notice of Appeal (and appeal fee required by 37 CFR 41.20(b)(2), an amendment that *prima facie* places the application in condition for allowance, a Request for Continued Examination and submission (37 CFR 1.114), or the filing of a continuing application under 37 CFR 1.53(b). See MPEP 711.03(c)(II)(A)(2).

The petition satisfies the requirements of 37 CFR 1.137(b) in that petitioner has supplied (1) the reply in the form of a Request for Continued Examination (RCE), including the fee of $790 and the submission required by 37 CFR 1.114; (2) the petition fee of $1,500; and (3) a proper statement of unintentional delay.

This application is being referred to Technology Center AU 3629 for processing of the RCE and for appropriate action by the Examiner in the normal course of business on the amendment submitted in accordance with 37 CFR 1.114.

Telephone inquiries concerning this decision should be directed to the undersigned at (571) 272-3204. Inquiries relating to further prosecution should be directed to the Technology Center.

Sherry D. Brinkley
Petitions Examiner
Office of Petitions

UNITED STATES PATENT AND TRADEMARK OFFICE

Commissioner for Patents
United States Patent and Trademark Office
P.O. Box 1450
Alexandria, VA 22313-1450
www.uspto.gov

HUDAK SHUNK & FARINE CO
2020 FRONT STREET
SUITE 307
CUYAHOGA FALLS, OH 44221

COPY MAILED

AUG 1 7 2004

OFFICE OF PETITIONS

ON PETITION

In re Application of
Anthony M. Mazany et al
Application No. 09/871,998
Filed: June 1, 2001
Attorney Docket No. 200EP040

This is a decision on the petition under 37 CFR 1.313, filed August 16, 2004, which is being treated under 37 CFR 1.313(c)(2) to withdraw the above-identified application from issue after payment of the issue fee.

The petition is **GRANTED**.

The above-identified application is withdrawn from issue for consideration of a submission under 37 CFR 1.114 (request for continued examination). See 37 CFR 1.313(c)(2).

Petitioner is advised that the issue fee paid on June 1, 2004 in the above-identified application cannot be refunded. If, however, the above-identified application is again allowed, petitioner may request that it be applied towards the issue fee required by the new Notice of Allowance.[1]

Telephone inquiries should be directed to Wan Laymon at (703) 306-5685.

This matter is being referred to Technology Center AU 1755 for processing of the request for continued examination under 37 CFR 1.114 and for consideration of the concurrently filed IDS.

Wan Laymon
Petitions Examiner
Office of Petitions
Office of the Deputy Commissioner
for Patent Examination Policy

---

[1] The request to apply the issue fee to the new Notice may be satisfied by completing and returning the new Issue Fee Transmittal Form PTOL-85(b), which includes the following language thereon: "Commissioner for Patents is requested to apply the Issue Fee and Publication Fee (if any) or re-apply any previously paid issue fee to the application identified above." Petitioner is advised that, whether a fee is indicated as being due or not, the Issue Fee Transmittal Form **must** be completed and timely submitted to avoid abandonment. Note the language in bold text on the first page of the Notice of Allowance and Fee(s) Due (PTOL-85).

UNITED STATES PATENT AND TRADEMARK OFFICE

Commissioner for Patents
United States Patent and Trademark Office
P.O. Box 1450
Alexandria, VA 22313-1450
www.uspto.gov

Harold C. Moore
Maginot, Addison & Moore
Bank One Center/Tower
111 Monument Circle, Suite 3000
Indianapolis, IN 46204-5115

COPY MAILED

AUG 3 1 2004

OFFICE OF PETITIONS

In re Application of :
Vitale et al. : DECISION ON PETITION
Application No. 09/872,030 :
Filed: June 1, 2001 :
Attorney Docket No. 15404-0068 :
For: Communication System Work Order :
Performance Method and System :

This is a decision on the petition under 37 CFR 1.47(a), filed August 12, 2004.

This is also a decision on the petition under 37 CFR 1.137(b), filed August 12, 2004, to revive the above-identified application.

The petition under 37 CFR 1.47(a) is granted.

The petition under 37 CFR 1.137(b) is granted.

Petition under 37 CFR 1.47(a)

Petitioner has shown that Robert J. McCammon, the non-signing inventor, has refused to join in the filing of the above-identified application after having been presented with the application papers. Specifically, the statement of facts of James D. Wood establishes that the inventor was mailed the application papers, including the specification, claims and drawings, but failed to respond to the request that he sign the declaration.

The above-identified application and papers have been reviewed and found in compliance with 37 CFR 1.47(a). This application is hereby accorded Rule 1.47(a) status. As provided in Rule 1.47(c), this Office will forward notice of this application's filing to the non-

signing inventor at the address given in the present petition. Notice of the filing of this application will also be published in the Official Gazette.

Petition under 37 CFR 1.137(b)

This application became abandoned for failure to reply timely to the Notice to File Missing Parts mailed August 2, 2001, which set a two-month extendable period to respond. No extensions of time were obtained pursuant to 37 CFR 1.136(a). Accordingly, this application became abandoned on October 3, 2001. A Notice of Abandonment was mailed on November 7, 2003.

The petitioner has met the requirements to revive the above-identified application pursuant to 37 CFR 1.137(b). Petitioner submitted the required reply, paid the petition fee, and made the proper statement of unintentional delay.

The $130.00 surcharge fee for the late filing of the declaration will be charged to Deposit Account No. 13-0014, as authorized.

The application file is being forwarded to the Office of Initial Patent Examination for further processing.

Telephone inquiries specific to this matter should be directed to the undersigned at (703) 306-5589.

Christina T. Donnell

Christina Tartera Donnell
Senior Petitions Attorney
Office of Petitions

UNITED STATES PATENT AND TRADEMARK OFFICE

Commissioner for Patents
United States Patent and Trademark Office
P.O. Box 1450
Alexandria, VA 22313-1450
www.uspto.gov

HAROLD C. MOORE
MAGINOT ADDISON & MOORE
BANK ONE CENTER/TOWER
111 MONUMENT CIRCLE, SUITE 3000
INDIANAPOLIS, IN 46204-5115

COPY MAILED

MAR 0 2 2006

OFFICE OF PETITIONS

In re Application of	:	
Michael Vitale et al	:	DECISION ON PETITION
Application No. 09/872,030	:	TO WITHDRAW
Filed: June 1, 2001	:	FROM RECORD
Attorney Docket No. 1504-0068	:	

This is a decision on the Request to Withdraw as attorney or agent of record under 37 C.F.R. § 1.36(b), filed January 20, 2006.

The request is **NOT APPROVED**.

A grantable request to withdraw as attorney/agent of record must be signed by every attorney/agent seeking to withdraw or contain a clear indication that one attorney is signing on behalf of another/others. A request to withdraw will not be approved unless at least 30 (thirty) days would remain between the date of approval and the later of the expiration date of a time to file a response or the expiration date of the maximum time period which can be extended under 37 C.F.R. § 1.136(a).

The request cannot be approved because the reason for withdrawl was not indicated.

All future communications from the Office will continue to be directed to the above-listed address until otherwise notified by applicant.

This matter is being referred to Technology Center AU 2617.

Telephone inquiries concerning this decision should be directed to Wan Laymon at 571-272-3220.

David Bucci
Petitions Examiner
Office of Petitions

UNITED STATES PATENT AND TRADEMARK OFFICE

Commissioner for Patents
United States Patent and Trademark Office
P.O. Box 1450
Alexandria, VA 22313-1450
www.uspto.gov

VOLPE AND KOENIG, P.C.
DEPT. ICC
UNITED PLAZA, SUITE 1600
30 SOUTH 17TH STREET
PHILADELPHIA PA 19103

COPY MAILED

APR 17 2006

OFFICE OF PETITIONS

In re Application of	:	
Jacques et al.	:	
Application No. 09/872,038	:	ON PETITION
Filed: June 1, 2001	:	
Attorney Docket No. I-2-0154.1US	:	

This is a decision on the petition under 37 C.F.R. § 1.137(b), filed March 31, 2006, to revive the above-identified application.

The petition is **GRANTED.**

The petition satisfies the conditions for revival pursuant to the provisions of 37 CFR 1.137(b) in that (1) the reply in the form of the payment of the issue and publication fees; (2) the petition fee; and (3) the required statement of unintentional delay have been received. Accordingly, the response has been accepted as having been unintentionally delayed.

This matter is being referred to the Publishing Division for processing into a patent.

Telephone inquiries regarding this decision should be directed to the undersigned at (571) 272-3282.

Liana Chase
Petitions Examiner
Office of Petitions

UNITED STATES PATENT AND TRADEMARK OFFICE

COMMISSIONER FOR PATENTS
UNITED STATES PATENT AND TRADEMARK OFFICE
WASHINGTON, D.C. 20231
www.uspto.gov
AMB 04-02

Paper No. 5

DUNLAP CODDING & ROGERS P.C.
SUITE 420
9400 N. BROADWAY
OAKLAHOMA CITY, OK 73114

COPY MAILED

APR 1 0 2002

OFFICE OF PETITIONS

In re Application of	:	
Weder	:	
Application No. 09/872,046	:	ON PETITION
Filed: May 31, 2001	:	
Attorney Docket No. 8403.399	:	
For: METHOD OF USING A FLORAL	:	
PACKAGE	:	

This is a decision on the petition under 37 CFR 1.137(b), filed January 15, 2002, to revive the above-identified application.

The petition is **GRANTED**.

This application became abandoned August 27, 2001 for failure to timely file a proper response to the Notice to File Missing Parts of Nonprovisional Application ("Notice") mailed June 26, 2001. The Notice set a two (2) month shortened statutory period of time for reply. No extensions of time in accordance with 37 CFR 1.136(a) were obtained. This decision precedes Notice of Abandonment.

This application will be forwarded to the Office of Initial Patent Examination for further processing.

Telephone inquiries concerning this matter may be directed to the undersigned at (703) 305-0310.

Alesia M. Brown
Petitions Attorney
Office of Petitions
Office of the Deputy Commissioner
for Patent Examination Policy

#6
12-06-02

UNITED STATES PATENT AND TRADEMARK OFFICE

COMMISSIONER FOR PATEN
UNITED STATES PATENT AND TRADEMARK OFFI
WASHINGTON, D.C. 2023
www.uspto.g

DEC 6 2002

Paper No. ~~5~~ 6

James E. Parsons
SKJERVEN MORRIL LLP
25 Metro Drive
Suite 700
San Jose, CA 95110

In re Application of:	)	
Keeler, Stanton M.	)	
Application No. 09/872,060	)	**DECISION ON REQUEST FOR**
Filed: June 1, 2001	)	**WITHDRAWAL AS ATTORNEY**
For: ERROR CORRECTION CODE BLOCK FORMAT	)	

This is a decision on the Request To Withdraw from Representation filed October 30, 2002.

A grantable request to withdraw as attorney of record should indicate thereon the present mailing addresses of the attorney(s) who is/are withdrawing from the record and of the applicant. The request for withdrawal must be signed by every attorney seeking to withdraw or contain a clear indication that one attorney is signing on behalf of another/others. A request to withdraw will not be approved unless at least 30 (thirty) days would remain between the date of approval and the later of the expiration date of a time to file a response or the expiration date of the maximum time period which can be extended under 37 C.F.R. § 1. 136(a). The effective date of withdrawal being the date of decision and not the date of request. See M.P.E.P. § 402.06. 37 C.F.R. § 1.36 further requires that the applicant or patent owner be notified of the withdrawal of the attorney or agent.

The request filed October 30, 2002 meets all the requirements. Accordingly the request is **GRANTED**.

All future communications from the Office will be directed to the below-listed address until otherwise notified by applicant. This correspondence address is provided by the withdrawn attorney(s). Applicant is reminded of the obligation to promptly notify the Patent and Trademark Office (Office) of any change in correspondence address to ensure receipt of all communications from the Office.

James R. Matthews

for Vincent N. Trans
Special Programs Examiner
Technology Center 2100
Computer Architecture and Software
(703) 305-9750

cc: Steve Volk
Chairman of the Board
DATAPLAY, INC.
2560 55th Street
Boulder, CO 80301-5706

UNITED STATES PATENT AND TRADEMARK OFFICE

COMMISSIONER FOR PATEN
UNITED STATES PATENT AND TRADEMARK OFFI
WASHINGTON, D.C. 2023
www.uspto.g

MAILED

JAN 1 4 2003

Technology Center 2100

Paper No. 8

James E. Parsons
SKJERVEN, MORRILL, MACPHERSON,
FRANKLIN & FRIEL LLP
25 Metro Drive, Suite 700
San Jose, CA 95110-1349

In re Application of:	)	
Keeler, Stanton M.	)	
Application No. 09/872,060	)	**DECISION ON REQUEST FOR**
Filed: June 1, 2001	)	**WITHDRAWAL AS ATTORNEY**
For: ERROR CORRECTION CODE BLOCK FORMAT	)	

This is a decision on the Request To Withdraw from Representation filed December 24, 2002.

A grantable request to withdraw as attorney of record should indicate thereon the present mailing addresses of the attorney(s) who is/are withdrawing from the record and of the applicant. The request for withdrawal must be signed by every attorney seeking to withdraw or contain a clear indication that one attorney is signing on behalf of another/others. A request to withdraw will not be approved unless at least 30 (thirty) days would remain between the date of approval and the later of the expiration date of a time to file a response or the expiration date of the maximum time period which can be extended under 37 C.F.R. § 1. 136(a). The effective date of withdrawal being the date of decision and not the date of request. See M.P.E.P. § 402.06. 37 C.F.R. § 1.36 further requires that the applicant or patent owner be notified of the withdrawal of the attorney or agent.

The request filed December 24, 2002 meets all the requirements. Accordingly the request is **GRANTED**.

All future communications from the Office will be directed to the below-listed address until otherwise notified by applicant. This correspondence address is provided by the withdrawn attorney(s). Applicant is reminded of the obligation to promptly notify the Patent and Trademark Office (Office) of any change in correspondence address to ensure receipt of all communications from the Office.

James R. Matthews
for Vincent N. Trans
Special Programs Examiner
Technology Center 2100
Computer Architecture and Software
(703) 305-9750

cc: Alan MacPherson
MACPHERSON KWOK CHEN & HEID LLP
2001 Gateway Place, Suite 195
San Jose, CA 95110

UNITED STATES PATENT AND TRADEMARK OFFICE

Commissioner for Patents
United States Patent and Trademark Office
P.O. Box 1450
Alexandria, VA 22313-1450
www.uspto.gov

HICKMAN PALERMO TRUONG & BECKER/ORACLE
2055 GATEWAY PLACE
SUITE 550
SAN JOSE, CA 95110-1089

COPY MAILED

JAN 26 2007

OFFICE OF PETITIONS

In re Application of	:	
Paul, et al.	:	
Application No.: 09/872,066	:	ON PETITION
Filing Date: May 31, 2001	:	
Attorney Docket No. 50277-1557	:	

This is a decision on the petition under 37 CFR 1.47 filed December 11, 2006. The petition will be treated as a petition under 37 CFR 1.183 to waive the requirements of 37 CFR 1.67.

The petition is **granted**.

Petitioner requests that the supplemental declaration filed December 11, 2006, be accepted without the signature of the one of the joint inventor as he cannot be located. It is noted, that in this case, 37 CFR 1.67 requires that the supplemental declaration be signed by all named inventors, yet petitioner has demonstrated that the inventors cannot be located. In such a case, Section 603 of the *Manual of Patent Examining Procedure* (MPEP) provides that:

> When an inventor who executed the original declaration is refusing or cannot be found to execute a required supplemental declaration, the requirement for that inventor to sign the supplemental declaration may be suspended or waived in accordance with 37 CFR 1.183. All available joint inventor(s) must sign the supplemental declaration on behalf of themselves, if appropriate, and on behalf of the nonsigning inventor. See MPEP § 409.03(a). If there are no joint inventor(s), then the party with sufficient proprietary interest must sign the supplemental declaration on behalf of the nonsigning inventor. See MPEP § 409.03(b).

Accordingly, the instant petition will be treated as petition under 37 CFR 1.183 to waive the requirement of 37 CFR 1.67 so as to accept a supplemental declaration without the signature of all of the joint inventors.

The fee for a petition under 37 CFR 1.183 is $400.00. Deposit account 50-1302 will be and additional $200.00, accordingly.

The application file is being directed to the Office of Patent Publications for further processing.

Telephone inquiries regarding this matter should be directed to the undersigned at (571) 272-3222.

Kenya A. McLaughlin
Petitions Attorney
Office of Petitions

UNITED STATES PATENT AND TRADEMARK OFFICE

COMMISSIONER FOR PATENTS
UNITED STATES PATENT AND TRADEMARK OFFICE
WASHINGTON, D.C. 20231
www.uspto.gov

Paper No. 10

Michael A. Davis, Jr.
Haynes and Boone, L.L.P.
600 Congress Avenue
Suite 1600
Austin, TX 78701

MAIL

OCT 2 4 2002

DIRECTOR OFFICE
TECHNOLOGY CENTER 2100

In re Application of: Mitchell T. Berg	)	
Application No. 09/872,081	)	
Filed: June 1, 2001	)	
For: METHOD AND SYSTEM FOR	)	
EXECUTING PROTOCOL STACK	)	**DECISION ON REQUEST FOR**
INSTRUCTIONS TO FORM A	)	**WITHDRAWAL AS ATTORNEY**
PACKET FOR CAUSING A	)	
COMPUTING DEVICE TO	)	
PERFORM AN OPERATION	)	

This is a decision on the Request To Withdraw from Representation filed October 7, 2002 and the Supplemental Request filed October 21, 2002.

A grantable request to withdraw as attorney of record should indicate thereon the present mailing addresses of the attorney(s) who is/are withdrawing from the record and of the applicant. The request for withdrawal must be signed by every attorney seeking to withdraw or contain a clear indication that one attorney is signing on behalf of another/others. A request to withdraw will not be approved unless at least 30 (thirty) days would remain between the date of approval and the later of the expiration date of a time to file a response or the expiration date of the maximum time period which can be extended under 37 C.F.R. § 1. 136(a). The effective date of withdrawal being the date of decision and not the date of request. See M.P.E.P. § 402.06. 37 C.F.R. § 1.36 further requires that the applicant or patent owner be notified of the withdrawal of the attorney or agent.

The request is **GRANTED**.

All future communications from the Office will be directed to the below-listed address until otherwise notified by applicant. This correspondence address is provided by the withdrawn attorney(s). Applicant is reminded of the obligation to promptly notify the Patent and Trademark Office (Office) of any change in correspondence address to ensure receipt of all communications from the Office.

FOR Vincent N. Trans
Special Programs Examiner
Technology Center 2100
Computer Architecture and Software
(703) 305-9750

cc: SEED Intellectual Property Law Group PLLC
701 Fifth Avenue
Suite 6300
Seattle, Washington 98105

UNITED STATES PATENT AND TRADEMARK OFFICE

COMMISSIONER FOR PATENTS
UNITED STATES PATENT AND TRADEMARK OFFICE
P.O. BOX 1450
ALEXANDRIA, VA 22313-1450
www.uspto.gov

Paper No. 14

Blakely Sokoloff Taylor & Zafman
12400 Wilshire Boulevard, Seventh Floor
Los Angeles, CA 90025

COPY MAILED
JUL 08 2003
OFFICE OF PETITIONS

In re Application of :
Steve West, et al. :
Application No. 09/872,125 : DECISION GRANTING PETITION
Filed: May 31, 2001 : UNDER 37 CFR 1.137(b)
Attorney Docket No. 5043P013 :

This is a decision on the petition, filed May 27, 2003, under 37 CFR 1.137(f), which is being treated as a petition under 37 CFR 1.137(b) to revive the instant nonprovisional application.

The petition is **GRANTED**.

Petitioner states that the instant nonprovisional application is the subject of an application filed in a foreign country on May 22, 2002. However, the U.S. Patent and Trademark Office was unintentionally not notified of this filing within 45 days subsequent to the filing of the subject application in a foreign country.

In view of the above, this application became abandoned pursuant to 35 U.S.C. § 122(b)(2)(B)(iii) and 37 CFR 1.213(c) for failure to timely notify the Office of the filing of an application in a foreign country, or under a multilateral international agreement, that requires publication of applications 18 months after filing.

A petition under 37 CFR 1.137(b) to revive for failure to timely notify the Office of the filing of an application in a foreign country must be accompanied by:

(1) the required reply, which is met by the notification of such filing in a foreign country or under a multinational treaty;

(2) the petition fee as set forth in 37 CFR 1.17(m); and

(3) a statement that the entire delay in filing the required reply from the due date of the reply until the filing of a grantable petition was unintentional.

The instant petition has been found to be in compliance with 37 CFR 1.137(b). Accordingly, the failure to timely notify the Office of a foreign or international filing within 45 days after the date of filing of such foreign or international application as provided by 35 U.S.C. § 122(b)(2)(B)(iii) and 37 CFR 1.213(c) is accepted as having been unintentionally delayed.

The previous Request and Certification under 35 U.S.C. § 122(b)(2)(B)(i) has been rescinded.

Telephone inquiries concerning this decision should be directed to Cheryl Gibson-Baylor at (703)308-5111, or in her absence, Frances Hicks at (703)305-8680.

This application is being forwarded to Technology Center 2600, Art Unit 2666, for appropriate action on the reply to the non-final Office action on March 13, 2003, received April 21, 2003

Cheryl Gibson-Baylor
Office of Petitions
Office of the Deputy Commissioner
for Patent Examination Policy

Frances Hicks
Petitions Examiner

UNITED STATES PATENT AND TRADEMARK OFFICE

Commissioner for Patents
United States Patent and Trademark Office
P.O. Box 1450
Alexandria, VA 22313-1450
www.uspto.gov

Paper No. 8

GARY M. NATH
NATH & ASSOCIATES
1030 15 th STREET , N.W.
6th FLOOR
WASHINGTON DC 20005

COPY MAILED
JUN 0 9 2004
OFFICE OF PETITIONS

In re Application of
Branislav Petrovic et al.
Application No. 09/872,143
Filed: June 1, 2001
Attorney's Docket No. 90130

ON PETITION

This is a decision on the petition filed January 13, 2004 under 37 CFR 1.137(b), to revive the above-identified application.

The petition is **GRANTED**.

The instant application became abandoned on May 6, 2003, for failure to timely reply to the Notice to File Missing Parts, mailed March 5, 2003, which set a two (2) month shortened statutory period for reply. No extensions of the time for reply in accordance with 37 CFR 1.136(a) were obtained. Accordingly, a Notice of Abandonment was mailed May 28, 2004.

The filing of the oath or declaration as required by the Notice to File Missing Parts mailed March 5, 2003 is acknowledged.

All other requirements having been met , this application is being forwarded to the Office of Initial Patent Examination for further pre-examination processing.

Telephone inquiries concerning this matter may be directed to the undersigned Petitions Attorney at (703) 305-4497.

Patricia Faison-Ball

Patricia Faison-Ball
Senior Petitions Attorney
Office of Petitions

UNITED STATES PATENT AND TRADEMARK OFFICE

COMMISSIONER FOR PATENTS
UNITED STATES PATENT AND TRADEMARK OFFICE
P.O. BOX 1450
ALEXANDRIA, VA 22313-1450
WWW.USPTO.GOV

Paper No. 14

Blakely, Sokoloff, Taylor & Zafman, LLP
12400 Wilshire Boulevard, Seventh Floor
Los Angeles, CA 90025

COPY MAILED

SEP 2 6 2003

OFFICE OF PETITIONS

In re Application of :
David Chen, et. al. :
Application No. 09/872,146 : DECISION ON PETITION
Filed: May 31, 2001 : UNDER 37 CFR 1.137(b)
Attorney Docket No. 5043P012 :

This is a decision on the petition, filed May 27, 2003, which is being treated as a petition under 37 CFR 1.137(b) to revive the instant nonprovisional application for failure to timely notify the U.S. Patent and Trademark Office (USPTO) of the filing of an application in a foreign country, or under a multinational treaty that requires publication of applications eighteen months after filing. *See* 37 CFR 1.137(f).

The petition is dismissed as **MOOT**.

The instant nonprovisional application became the subject of a counterpart application filed in an eighteen-month country on May 22, 2002. A review of the file record discloses that a Notice to Rescind was received in the USPTO on May 30, 2002.

Where an applicant makes a nonpublication request under 35 U.S.C. 122(b)(2)(B)(i) and then rescinds (pursuant to 35 U.S.C. § 122(b)(2)(B)(ii)) the nonpublication request **before or on the date a counterpart application is filed in an eighteen-month publication country**, the nonpublication request will be treated as annulled and the application will be treated as if the nonpublication request had never been made. *See* Clarification of the United States Patent and Trademark Office's Interpretation of the Provisions of 35 U.S.C. 122(b)(2))(B)(ii)-(iv), 1272 OG 1 (July 1, 2003), available at http://www.uspto.gov/web/patents/patog/week26/.

In the instant application, and as noted above, since the notice of foreign filing was received within 45 days of the filing date of the counterpart application as required by 35 U.S.C.§ 122(b)(2)(B)(iii), this application is not regarded as abandoned.

Since the application is not in fact abandoned, for the reason stated above, the petition fee of $1,300 is being credited to Deposit Account No. 02-2666 as authorized.

This application is being forwarded to Technology Center 2600 for examination in due course.

Any inquiries concerning this decision may be directed to Andrea Smith at (703) 308-6711.

Andrea Smith
Petitions Examiner
Office of Petitions
Office of the Deputy Commissioner
for Patent Examination Policy

Frances Hicks
Lead Petitions Examiner

UNITED STATES PATENT AND TRADEMARK OFFICE

Commissioner for Patents
United States Patent and Trademark Office
P.O. Box 1450
Alexandria, VA 22313-1450
www.uspto.gov

BLAKELY SOKOLOFF TAYLOR & ZAFMAN
12400 WILSHIRE BOULEVARD
SEVENTH FLOOR
LOS ANGELES, CA 90025-1030

COPY MAILED

NOV 2 9 2004

OFFICE OF PETITIONS

In re Application of	:	
David Chen et al	:	
Application No. 09/872,146	:	ON PETITION
Filed: May 31, 2001	:	
Attorney Docket No. 5043P012	:	

This is a decision on the petition under 37 CFR 1.182, filed August 5, 2004, to change the name of one of the inventors.

The petition is **Granted**.

A corrected Filing Receipt with the desired name change accompanies this decision on petition.

Telephone inquiries regarding the above matter should be directed to the undersigned at (571)272-3208.

This application is being referred to Technology Center Art Unit 2665.

Karen Creasy

Karen Creasy
Petitions Examiner
Office of Petitions
Office of the Deputy Commissioner
for Patent Examination Policy

ATTACHMENT: CORRECTED FILING RECEIPT

UNITED STATES PATENT AND TRADEMARK OFFICE

Commissioner for Patents
United States Patent and Trademark Office
P.O. Box 1450
Alexandria, VA 22313-1450
www.uspto.gov

PERKINS COIE LLP
PATENT-SEA
P.O. BOX 1247
SEATTLE, WA 98111-1247

COPY MAILED

AUG 2 3 2006

OFFICE OF PETITIONS

In re Application of	:	
Kyle M. Hanson et al	:	
Application No. 09/872,151	:	DECISION DISMISSING PETITIONS
Filed: May 31, 2001	:	UNDER 37 CFR 1.78(a)(3) AND (a)(6)
Attorney Docket No. 291958158US	:	

This is a decision on the petition under 37 CFR §§ 1.78(a)(3) and 1.78(a)(6), filed April 21, 2006, to accept an unintentionally delayed claim under 35 U.S.C. §§ 120 and 119(e) for the benefit of priority to the prior-filed nonprovisional and provisional applications set forth in the concurrently filed amendment.

The petition is **DISMISSED**

A petition for acceptance of a claim for late priority under 37 CFR §§ 1.78(a)(3) and 1.78(a)(6) is only applicable to those applications filed on or after November 29, 2000 and after the expiration of the period specified in 37 CFR §§ 1.78(a)(2)(ii) and 1.78(a)(5)(ii). In addition, the petition under 37 CFR §§ 1.78(a)(3) and 1.78(a)(6) must be accompanied by:

(1) the reference required by 35 U.S.C. §§ 120 and 119(e) and 37 CFR §§ 1.78(a)(2)(i) and 1.78(a)(5)(i) of the prior-filed application, unless previously submitted;

(2) the surcharge set forth in § 1.17(t); and

(3) a statement that the entire delay between the date the claim was due under 37 CFR §§ 1.78(a)(2)(ii) and 1.78(a)(5)(ii) and the date the claim was filed was unintentional. The Director may require additional where there is a question whether the delay was unintentional.

The petition does not comply with item (1).

The claim for benefit of priority to Application No. 10/158,220 is improper since the claim for benefit must be to a "prior-filed" application. Therefore, since the filing date of this application is May 31, 2001, it cannot claim the benefit of priority to "later-filed" Application No. 10/158,220. Additionally, a claim for benefit to provisional Application No. 60/294,690 is improper, since the present application was filed more than twelve months from the filing date of the provisional application.

Before the petition under 37 CFR §§ 1.78(a)(3) and 1.78(a)(6) can be granted, a renewed petition and either an Application Data Sheet or a substitute amendment (complying with the provisions of 37 CFR 1.121 and 37 CFR 1.76(b)(5)) to correct the above matters are required.

Further correspondence with respect to this matter should be addressed as follows:

By mail: Mail Stop PETITIONS
Commissioner for Patents
Post Office Box 1450
Alexandria, VA 22313-1450

By hand: Customer Service Window
Mail Stop Petitions
Randolph Building
401 Dulany Street
Alexandria, VA 22314

By fax: (571) 273-8300
ATTN: Office of Petitions

Any questions concerning this matter may be directed to Irvin Dingle at (571) 272-3210.

Frances Hicks
Petitions Examiner
Office of Petitions

UNITED STATES PATENT AND TRADEMARK OFFICE

Commissioner for Patents
United States Patent and Trademark Office
P.O. Box 1450
Alexandria, VA 22313-1450
www.uspto.gov

PERKINS COIE LLP
PATENT-SEA
P. O. BOX 1247
SEATTLE, WA 98111-1247

COPY MAILED

APR 0 4 2007

OFFICE OF PETITIONS

In re Application of	:	
Kyle M. Hanson et al	:	
Application No. 09/872,151	:	DECISION ON PETITIONS
Filed: May 31, 2001	:	UNDER 37 CFR 1.78(a)(3) AND (a)(6)
Attorney Docket No. 291958158US	:	

This is a decision on the renewed petitions under 37 CFR §§ 1.78(a)(3) and 1.78(a)(6), filed December 27, 2006, to accept an unintentionally delayed claim under 35 U.S.C. §§120 and 119(e) for the benefit of priority to the prior-filed applications set forth in the concurrently filed amendment.

The petitions are **GRANTED.**

Initially, it is noted that the petition states that the decision mailed on August 23, 2006 improperly dismissed the petition of April 21, 2006, in view of the filing of a supplemental amendment on August 18, 2006. Unfortunately, at the time the August 23, 2006 decision was rendered, the amendment of August 18, 2006 had not yet been made of record in the Image File Wrapper for this application.

A petition for acceptance of a claim for late priority under 37 CFR §§ 1.78(a)(3) and 1.78(a)(6) is only applicable to those applications filed on or after November 29, 2000. Further, the petition is appropriate only after the expiration of the period specified in 37 CFR §§ 1.78(a)(2)(ii) and 1.78(a)(5)(ii). In addition, the petition under 37 CFR §§ 1.78(a)(3) and 1.78(a)(6) must be accompanied by:

(1) the reference required by 35 U.S.C. §§ 120 and 119(e) and 37 CFR §§ 1.78(a)(2)(i) and 1.78(a)(5)(i) of the prior-filed application, unless previously submitted;

(2) the surcharge set forth in § 1.17(t); and

(3) a statement that the entire delay between the date the claim was due under 37 CFR §§ 1.78(a)(2)(ii) and 1.78(a)(5)(ii) and the date the claim was filed was unintentional. The Director may require additional where there is a question whether the delay was unintentional.

Further, the nonprovisional application(s) claiming the benefit of the prior-filed provisional application(s) must have been filed within twelve months of the filing date of the prior-filed provisional application(s).

All of the above requirements having been satisfied, the late claim for benefit of priority to the prior-filed applications under 35 U.S.C. §§ 120 and 119(e) is accepted as being unintentionally delayed.

The granting of the petition to accept the delayed benefit claim to the prior-filed applications under 37 CFR §§ 1.78(a)(3) and 1.78(a)(6) should not be construed as meaning that this application is entitled to the benefit of the filing date of the prior-filed applications. In order for this application to be entitled to the benefit of the prior-filed applications, all other requirements under 35 U.S.C. §§120 and 1.78(a)(1) and (a)(2) and under 35 U.S.C. §119(e) and 37 CFR 1.78(a)(4) and (a)(5) must be met. Similarly, the fact that the corrected Filing Receipt accompanying this decision on petition includes the prior-filed applications should not be construed as meaning that applicant is entitled to the claim for benefit of priority to the prior-filed applications noted thereon. Accordingly, the examiner will, in due course, consider this benefit claim and determine whether the application is entitled to the benefit of the earlier filing date.

A corrected Filing Receipt, which includes the priority claim to the prior-filed applications, accompanies this decision on petition.

Any questions concerning this matter may be directed to the undersigned at (571) 272-3218. All other inquiries concerning either the examination procedures or status of the application should be directed to the Technology Center.

This application is being referred to Technology Center Art Unit 1742 for consideration by the examiner of the claim for benefit of priority under 35 U.S.C. § §120 and 119(e) to the prior-filed nonprovisional and provisional applications.

Frances Hicks
Petitions Examiner
Office of Petitions

ATTACHMENT: Corrected Filing Receipt

UNITED STATES PATENT AND TRADEMARK OFFICE

UNITED STATES DEPARTMENT OF COMMERCE
United States Patent and Trademark Office
Address: COMMISSIONER FOR PATENTS
P.O. Box 1450
Alexandria, Virginia 22313-1450
www.uspto.gov

APPL NO.	FILING OR 371(c) DATE	ART UNIT	FIL FEE REC'D	ATTY.DOCKET NO	TOT CLMS	IND CLMS
09/872,151	05/31/2001	1742	2900	291958158US	90	13

CONFIRMATION NO. 9156

CORRECTED FILING RECEIPT

OC000000023235468

25096
PERKINS COIE LLP
PATENT-SEA
P.O. BOX 1247
SEATTLE, WA 98111-1247

Date Mailed: 04/04/2007

Receipt is acknowledged of this regular Patent Application. It will be considered in its order and you will be notified as to the results of the examination. Be sure to provide the U.S. APPLICATION NUMBER, FILING DATE, NAME OF APPLICANT, and TITLE OF INVENTION when inquiring about this application. Fees transmitted by check or draft are subject to collection. Please verify the accuracy of the data presented on this receipt. **If an error is noted on this Filing Receipt, please mail to the Commissioner for Patents P.O. Box 1450 Alexandria Va 22313-1450. Please provide a copy of this Filing Receipt with the changes noted thereon. If you received a "Notice to File Missing Parts" for this application, please submit any corrections to this Filing Receipt with your reply to the Notice. When the USPTO processes the reply to the Notice, the USPTO will generate another Filing Receipt incorporating the requested corrections (if appropriate).**

Applicant(s)

Kyle M. Hanson, Kalispell, MT;
Thomas L. Ritzdorf, Kalispell, MT;
Gregory J. Wilson, Kalispell, MT;
Paul R. McHugh, Kalispell, MT;

Power of Attorney:

Paul Parker--38264

Domestic Priority data as claimed by applicant

This application is a CIP of 09/804,697 03/12/2001 PAT 6,660,137
which is a CON of PCT/US00/10120 04/13/2000
which claims benefit of 60/129,055 04/13/1999
This application 09/872,151
claims benefit of 60/294,690 05/30/2001

Foreign Applications

If Required, Foreign Filing License Granted: 07/11/2001

The country code and number of your priority application, to be used for filing abroad under the Paris Convention, is US09/872,151

Projected Publication Date: Not Applicable

Non-Publication Request: No

Early Publication Request: No

Title

Apparatus and methods for electrochemical processing of microelectronic workpieces

Preliminary Class

204

PROTECTING YOUR INVENTION OUTSIDE THE UNITED STATES

Since the rights granted by a U.S. patent extend only throughout the territory of the United States and have no effect in a foreign country, an inventor who wishes patent protection in another country must apply for a patent in a specific country or in regional patent offices. Applicants may wish to consider the filing of an international application under the Patent Cooperation Treaty (PCT). An international (PCT) application generally has the same effect as a regular national patent application in each PCT-member country. The PCT process **simplifies** the filing of patent applications on the same invention in member countries, but **does not result** in a grant of "an international patent" and does not eliminate the need of applicants to file additional documents and fees in countries where patent protection is desired.

Almost every country has its own patent law, and a person desiring a patent in a particular country must make an application for patent in that country in accordance with its particular laws. Since the laws of many countries differ in various respects from the patent law of the United States, applicants are advised to seek guidance from specific foreign countries to ensure that patent rights are not lost prematurely.

Applicants also are advised that in the case of inventions made in the United States, the Director of the USPTO must issue a license before applicants can apply for a patent in a foreign country. The filing of a U.S. patent application serves as a request for a foreign filing license. The application's filing receipt contains further information and guidance as to the status of applicant's license for foreign filing.

Applicants may wish to consult the USPTO booklet, "General Information Concerning Patents" (specifically, the section entitled "Treaties and Foreign Patents") for more information on timeframes and deadlines for filing foreign patent applications. The guide is available either by contacting the USPTO Contact Center at 800-786-9199, or it can be viewed on the USPTO website at http://www.uspto.gov/web/offices/pac/doc/general/index.html.

For information on preventing theft of your intellectual property (patents, trademarks and copyrights), you may wish to consult the U.S. Government website, http://www.stopfakes.gov. Part of a Department of Commerce initiative, this website includes self-help "toolkits" giving innovators guidance on how to protect intellectual property in specific countries such as China, Korea and Mexico. For questions regarding patent enforcement issues, applicants may call the U.S. Government hotline at 1-866-999-HALT (1-866-999-4158).

LICENSE FOR FOREIGN FILING UNDER
Title 35, United States Code, Section 184
Title 37, Code of Federal Regulations, 5.11 & 5.15

GRANTED

The applicant has been granted a license under 35 U.S.C. 184, if the phrase "IF REQUIRED, FOREIGN FILING LICENSE GRANTED" followed by a date appears on this form. Such licenses are issued in all applications where

the conditions for issuance of a license have been met, regardless of whether or not a license may be required as set forth in 37 CFR 5.15. The scope and limitations of this license are set forth in 37 CFR 5.15(a) unless an earlier license has been issued under 37 CFR 5.15(b). The license is subject to revocation upon written notification. The date indicated is the effective date of the license, unless an earlier license of similar scope has been granted under 37 CFR 5.13 or 5.14.

This license is to be retained by the licensee and may be used at any time on or after the effective date thereof unless it is revoked. This license is automatically transferred to any related applications(s) filed under 37 CFR 1.53(d). This license is not retroactive.

The grant of a license does not in any way lessen the responsibility of a licensee for the security of the subject matter as imposed by any Government contract or the provisions of existing laws relating to espionage and the national security or the export of technical data. Licensees should apprise themselves of current regulations especially with respect to certain countries, of other agencies, particularly the Office of Defense Trade Controls, Department of State (with respect to Arms, Munitions and Implements of War (22 CFR 121-128)); the Bureau of Industry and Security, Department of Commerce (15 CFR parts 730-774); the Office of Foreign Assets Control, Department of Treasury (31 CFR Parts 500+) and the Department of Energy.

NOT GRANTED

No license under 35 U.S.C. 184 has been granted at this time, if the phrase "IF REQUIRED, FOREIGN FILING LICENSE GRANTED" DOES NOT appear on this form. Applicant may still petition for a license under 37 CFR 5.12, if a license is desired before the expiration of 6 months from the filing date of the application. If 6 months has lapsed from the filing date of this application and the licensee has not received any indication of a secrecy order under 35 U.S.C. 181, the licensee may foreign file the application pursuant to 37 CFR 5.15(b).

UNITED STATES PATENT AND TRADEMARK OFFICE

Commissioner for Patents
United States Patent and Trademark Office
P.O. Box 1450
Alexandria, VA 22313-1450
www.uspto.gov

ARENT FOX KINTNER PLOTKIN & KAHN, PLLC
SUITE 600
1050 CONNECTICUT AVENUE, N.W.
WASHINGTON, DC 20036-5339

COPY MAILED

FEB 07 2005

OFFICE OF PETITIONS

In re Patent No. 6,824,760 :
Issue Date: November 30, 2004 :
Application No. 09/872,156 : ON PETITION
Filed: June 4, 2001 :
Attorney Docket No. 107380-00005 :

This is a decision on the petition filed January 6, 2005, which is being treated as a petition under 37 CFR 3.81(b)[1] to add the assignee's data on the front page of the above-identified patent by way of a Certificate of Correction.

The petition is **granted**.

Telephone inquiries concerning this matter may be directed to the undersigned at (571) 272-3210. Any questions concerning the issuance of the Certificate of Correction should be directed to the Certificates of Correction Branch at (703) 305-8309.

The matter is being forwarded to the Certificates of Correction Branch for issuance of the requested Certificate of Correction.

Irvin Dingle
Petitions Examiner
Office of Petitions
Office of the Deputy Commissioner
for Patent Examination Policy

[1] See Official Gazette of June 22, 2004

UNITED STATES PATENT AND TRADEMARK OFFICE

UNITED STATES DEPARTMENT OF COMMERCE
United States Patent and Trademark Office
Address: COMMISSIONER FOR PATENTS
P.O. Box 1450
Alexandria, Virginia 22313-1450
www.uspto.gov

Sunstein Kann Murphy & Timbers LLP
125 SUMMER STREET
BOSTON, MA 02110-1618

Mail Date: 04/26/2010

Applicant	: Daniel Fishman	: DECISION ON REQUEST FOR
Patent Number	: 7668900	: RECALCULATION of PATENT
Issue Date	: 02/23/2010	: TERM ADJUSTMENT IN VIEW
Application No	: 09/872,164	: OF WYETH AND NOTICE OF INTENT TO
Filed	: 05/31/2001	: ISSUE CERTIFICATE OF CORRECTION
		:

The Request for Recalculation is **GRANTED** to the extent indicated.

The patent term adjustment has been determined to be **1556** days. The USPTO will *sua sponte* issue a certificate of correction reflecting the amount of PTA days determined by the recalculation.

Prior to the issuance of the certificate of correction, the USPTO will afford patentee an opportunity to be heard and request reconsideration. Accordingly, patentee has **one month or thirty (30) days**, whichever is longer, to file a request for reconsideration of this patent term adjustment calculation. See 35 U.S.C. 154(b)(3)(B)(ii) and 37 CFR 1.322(a)(4). No extensions of time will be granted under 37 CFR 1.136.

Patentee should use document code PET.OP if electronically filing a request for reconsideration of this patent term adjustment calculation. The patentee must also include the information required by 37 CFR 1.705(b)(2) and the fee required by 37 CFR 1.18(e). If patentee does not file a timely request for reconsideration of this patent term adjustment calculation including the information required by 37 CFR 1.705(b)(2) and the fee required by 37 CFR 1.18(e), the USPTO will issue a certificate of correction reflecting the PTA determination noted above.

Patentee should be aware that in order to preserve the right to review in the United States District Court for the District of Columbia of the USPTO patent term adjustment determination, patentee must ensure that he or she also take the steps required under 35 U.S.C. 154(b)(4)(A) in a timely manner. Nothing in the request for recalculation should be construed as providing an alternative time frame for commencing a civil action under 35 U.S.C. 154(b)(4)(A).

Any questions concerning this decision should be directed to the Office of Patent Legal Administration at 571-272-7702.

UNITED STATES PATENT AND TRADEMARK OFFICE

COMMISSIONER FOR PATENTS
UNITED STATES PATENT AND TRADEMARK OFFICE
WASHINGTON, D.C. 20231
www.uspto.gov

Paper No. 7

CARELLA BYRNE BAIN GILFILLAN CECCHI
STEWART & OLSTEIN
6 BECKER FARM ROAD
ROSELAND, NJ 07068

COPY MAILED

SEP 30 2002

OFFICE OF PETITIONS

In re Application of	:	
Beth A. Burnside et al	:	
Application No. 09/872,173	:	NOTICE
Filed: June 1, 2001	:	
Attorney Docket No. 550750-175	:	

This is a notice regarding your request for acceptance of a fee deficiency submission under 37 CFR 1.28. On September 1, 1998, the Court of Appeals for the Federal Circuit held that 37 CFR 1.28(c) is the sole provision governing the time for correction of the erroneous payment of the issue fee as a small entity. **See DH Technology v. Synergystex International, Inc. 154 F.3d 1333, 47 USPQ2d 1865 (Fed. Cir. Sept. 1, 1998).**

The Office no longer investigates or rejects original or reissue applications under 37 CFR 1.56. **1098 Off. Gaz. Pat. Office 502 (January 3, 1989)**. Therefore, nothing in this Notice is intended to imply that an investigation was done.

Your fee deficiency submission under 37 CFR 1.28 is hereby **ACCEPTED**.

Inquiries related to this communication should be directed to the Office of Petitions Staff at (703) 305-9285.

This file is being forwarded to Technology Center AU 1616.

Wan Laymon
Petitions Examiner
Office of Petitions
Office of the Deputy Commissioner
for Patent Examination Policy

UNITED STATES PATENT AND TRADEMARK OFFICE

Commissioner for Patents
United States Patent and Trademark Office
P.O. Box 1450
Alexandria, VA 22313-1450
www.uspto.gov
DIW 08-04

M. ELISA LANE
SHIRE LABORATORIES INC.
1550 EAST GUDE DRIVE
ROCKVILLE MD 20850

COPY MAILED

AUG 2 6 2004

OFFICE OF PETITIONS

In re Application of	:	
Flanner et al.	:	
Application No. 09/872,173	:	ON PETITION
Filed: 1 June, 2001	:	
For: System for osmotic delivery of	:	
pharmaceutically active agents	:	

This is a decision on the petition under 37 CFR 1.182, filed on 19 July, 2004, to change the order of the names of the inventors.

The petition is **granted**.

The order of the names of the inventors has been changed as follows:

1. Henry H. Flanner
2. Lisa C. McKnight
3. Beth A. Burnside

A corrected Filing Receipt is enclosed for petitioners' records.

This application is being forwarded to Technology Center 1600 for further processing.

Telephone inquiries concerning this matter may be directed to the undersigned at (703) 308-6918.

D Wood

Douglas I. Wood
Senior Petitions Attorney
Office of Petitions

Encl: Corrected Filing Receipt

UNITED STATES PATENT AND TRADEMARK OFFICE

Commissioner for Patents
United States Patent and Trademark Office
P.O. Box 1450
Alexandria, VA 22313-1450
www.uspto.gov

BRINKS HOFER GILSON & LIONE
P. O. Box 10395
Chicago IL 60610

COPY MAILED

SEP 2 6 2005

OFFICE OF PETITIONS

In re Application of
James Tranquilla
Application No. 09/,872,178
Filed: June 1, 2001
Attorney Docket Number: 11108/3

Title of Invention: Method of Reducing Carbon Levels in Fly Ash

ON PETITION

This is a decision on the petition filed February 16, 2005, under 37 CFR 1.137(a) and in the alternative under 37 CFR 1.137 (b) to revive the above-identified application.

The petition to revive under 37 CFR § 1.137(a) is **DISMISSED**.

The petition to revive under 37 CFR§ 1.137 (b) is **GRANTED.**

This above-identified application became abandoned for failure to timely file a proper reply to a non-final Office Action. The non-final Office Action was mailed on January 22, 2003 and set a three (3) month shortened statutory period for reply. No extensions of time were obtained under the provisions of 37 CFR §1.136(a). Accordingly, this application became abandoned on April 23, 2003. A Notice of Abandonment was mailed on August 19, 2003.

PETITION TO REVIVE UNDER 37 CFR § 1.137(a)

A grantable petition under 37 CFR § 1.137(a) must be accompanied by:

(1) the required reply,[1]

(2) the petition fee,

(3) a showing to the satisfaction of the Director that the entire delay in filing the

[1] In a nonprovisional application abandoned for failure to prosecute, the required reply may be met by the filing of a continuing application. In an application or patent, abandoned or lapsed for failure to pay the issue fee or any portion thereof, the required reply must be the payment of the issue fee or any outstanding balance thereof.

required reply from the due date for the reply until the filing of a grantable petition pursuant to this paragraph was unavoidable, and

(4) a terminal disclaimer and fee if the application was filed on or before June 8, 1995 or if the application is a design application.

The instant petition lacks items (3).

As to item (3), the showing of record is not sufficient to establish to the satisfaction of the Director that the delay was unavoidable within the meaning of 37 CFR §1.137(a).

The Office may revive an abandoned application if the delay in responding to the relevant outstanding office requirement is shown to the satisfaction of the Commissioner to have been "unavoidable." See, 37 CFR § 1.137(a)(3). Decisions on reviving abandoned applications have adopted the reasonably prudent person standard in determining if the delay was unavoidable. Ex parte Pratt, 1887 Dec. Comm'r Pat. 31, 32-33 (Comm'r Pat. 1887) (the term "unavoidable" is applicable to ordinary human affairs, and requires no more greater care or diligence than is generally used and observed by prudent and careful men in relation to their most important business."); In re Mattullath, 38 App. D.C. 497, 514-15 (D.C. Cir. 1912); Ex parte Henrich, 1913 Dec. Comm'r Pat. 139, 141 (Comm'r Pat. 1913). In addition, decisions on revival are made on a "case by case basis, taking all the facts and circumstances into account." Smith v. Mossinghoff, 671 F.2d 533, 538, 213 USPQ 977, 982 (D.C. Cir. 1982). A petition to revive an application as unavoidably abandoned cannot be granted where petitioner has failed to meet his or her burden of establishing the cause of the unavoidable delay. Haines v. Quigg, 673 F. Supp. 314, 5 USPQ2D 1130 (N.D. Ind. 1987).

The showing of record is inadequate to establish unavoidable delay within the meaning of 35 U.S.C. § 133 and 37 CFR 1.137(a).[2] Specifically, an application is "unavoidably" abandoned only where petitioner, or counsel for petitioner, takes all action necessary for a proper response to the outstanding Office action, but through the intervention of unforeseen circumstances, such as failure of mail, telegraph, facsimile, or the negligence of otherwise reliable employees, the response is not timely received in the Office.[3]

Petitioner asserts the application was unavoidably delayed because petitioner thought the Province of New Brunswick, who retained a security interest in Assignee's business, was going to prosecute the above-identified patent application.

---

[2]See MPEP 711(c)(III)(c)(2) for a discussion of the requirements for a showing of unavoidable delay.

[3]Ex parte Pratt, 1887 Dec. Comm'r Pat. 31 (Comm'r Pat. 1887).

Petitioner's argument has been considered but is not persuasive. To the extent, petitioner retains interest in the above-identified patent application, reliance on the Province of New Brunswick to prosecute does not equate to unavoidable delay. Office records show that the above-identified patent was assigned to EMR Microwave Technology Corporation (reel 011877/ frame 0957). Thus as the only assignee of record, petitioner is held to the responsibility to timely prosecute the application. The failure to ascertain whether the Province of New Brunswick intended to prosecute the application is not unavoidable.

Accordingly, petitioner has failed to provide sufficient arguments that warrant the finding of unavoidable delay within the meaning of 37 CFR 1.137(a).

Alternative Venue

In the alternative, petitioner has requested the above petition be treated under 37 CFR 1.137(b).

The statement of unintentional delay presented in the petition does not comply with the current rule. Pursuant to 37 CFR 1.137(b)(3) a statement that "the entire delay in filing the required reply from the due date for the reply until the filing of a grantable petition pursuant to 37 CFR 1.137(b) was unintentional" is required. However, the statement presented will be accepted and construed as the statement required by 37 CFR 1.137(b)(3). Petitioner must notify the Office if this is **not** a correct interpretation of the statement contained in the instant petition.

The requirements for the filing of a grantable petition under 37 CFR §1.137(b) have been met. This Petition is hereby **Granted**.

Pursuant to petitioner's request deposit account 23-1925 will be charged the $750.00 unintentional petition fee.

This application is being forwarded to Technology Center 1700 for further processing of the amendment submitted on February 16, 2005.

Telephone inquiries should be directed to the undersigned at (571) 272-3215.

Charlema R. Grant

Charlema R. Grant

Petitions Attorney

Office of Petitions

UNITED STATES PATENT AND TRADEMARK OFFICE

COMMISSIONER FOR PATENTS
UNITED STATES PATENT AND TRADEMARK OFFICE
P.O. BOX 1450
ALEXANDRIA, VA 22313-1450
www.uspto.gov

Paper No. 5

PEACOCK MYERS AND ADAMS P C
P O BOX 26927
ALBUQUERQUE NM 87125-6927

COPY MAILED

JUL 3 0 2003

OFFICE OF PETITIONS

In re Application of
Thomas P. Griego and John W. Eichman
Application No. 09/872,214
Filed: May 31, 2001
Attorney Docket No. 31248-1001
Title: SUBMICRON AND NANO SIZE PARTICLE ENCAPSULATION BY ELECTROCHEMICAL PROCESS AND APPARATUS

DECISION ON PETITION
UNDER 37 C.F.R. §1.137(f)

This is a decision on the petition filed on July 3, 2003, pursuant to 37 C.F.R. §1.137(f), to revive the above-identified application.

A grantable petition pursuant to 37 CFR 1.137(f) must be accompanied by:

(1) Notification of the filing of an application in a foreign country or under a multinational treaty that requires 18 month publication[1];
(2) The petition fee as set forth in 37 C.F.R. § 1.17(m), and;
(3) A statement that the entire delay in filing the notice from the date that the notice was due under 35 U.S.C. §122(b)(2)(B)(iii) until the date the notice was filed was unintentional. The Commissioner may require additional information where there is a question whether the delay was unintentional.

Petitioner states that the instant nonprovisional application is the subject of an application filed in either a foreign or an international application on December 5, 2002. However, the United States Patent and Trademark Office was unintentionally not notified of this filing within 45 days subsequent to the filing of the subject application in a foreign country.

1 See PTO/SB/36 and paragraph on PTO/SB/64a for further information. Both may be downloaded at http://www.uspto.gov/web/forms/index.html.

On June 18, 2002, a Request to Rescind the Nonpublication Request was filed with the Office.

If an applicant makes a nonpublication request and then rescinds the nonpublication request before or on the date a counterpart application is filed in an eighteen-month publication country, the application will be treated as if the nonpublication request were never made[2].

For the reason set forth above, the petition under 37 C.F.R. §1.137(f) is **DISMISSED AS MOOT**.

As such, no petition fee is necessary. The petition fee has been refunded to petitioner's Deposit Account.

After the mailing of this decision, the application file will be forwarded to Technology Center 1700 for further processing.

Telephone inquiries regarding *this decision* should be directed to the undersigned at (703) 305-0011.

Paul Shanoski

Paul Shanoski
Attorney
Office of Petitions
United States Patent and Trademark Office

2 Rescission generally has the effect of voiding, repealing, or annulling a previous action. See Black's Law Dictionary 1308 (7th ed. 1999) (second definition: to make void, to repeal, or annul). Thus, if an applicant makes a nonpublication request under 35 U.S.C. § 122(b)(2)(B)(i) and then rescinds (pursuant to 35 U.S.C. § 122(b)(2)(B)(ii)) the nonpublication request before or on the date a counterpart application is filed in an eighteen-month publication country, the nonpublication request under 35 U.S.C. § 122(b)(2)(B)(i) will be treated as annulled and the application will be treated as if the nonpublication request had never been made. See http://www.uspto.gov/web/offices/pac/dapp/opla/preognotice/35usc122b2binterpret.htm.

MAILED
FROM DIRECTORS OFFICE

UNITED STATES PATENT AND TRADEMARK OFFICE

MAR 2 4 2006

TECHNOLOGY CENTER 3600

Commissioner for Patents
United States Patent and Trademark Office
P.O. Box 1450
Alexandria, VA 22313-1450
www.uspto.gov

FOLEY & LARDNER
321 North Clark Street
Suite 2800
Chicago, IL 60610-4764

In re application of
Norman Feuer et al.
Application No. 09/872,224 :
Filed: June 1, 2001 :
For: NETWORKED BROADCASTING SYSTEM AND TRAFFIC SYSTEM FOR MULTIPLE BROADCASTS :

DECISION ON REQUEST FOR WITHDRAWAL OF ATTORNEY

This is a decision on the request filed on December 16, 2004, under 37 CFR 1.36 and MPEP 402.06, requesting permission to withdraw as the attorney of record in the above-identified application.

The request is **NOT APPROVED**.

Under 37 CFR 1.36 an attorney may withdraw only upon application to and approval by the Commissioner. It should be noted that a withdrawal is effective when approved, not when filed. For approval of such a request the following conditions must be met:

A) Each attorney of record must sign the notice of withdrawal, or the notice must contain a clear indication of one attorney signing on behalf of another, because the Office does not recognize law firms;
B) There must be at least 30 days between approval of the withdrawal and the later of the expiration date of a time period for reply or the expiration date of the period which can be obtained by a petition and fee for extension of time under 37 CFR 1.136(a);
C) A proper reason for the withdrawal as enumerated in 37 CFR 10.40(b) or subsection (1)-(6) of 37 CFR 10.40(c) must be provided;
D) The applicant or patent owner must have been notified of the withdrawal as provided for in 37 CFR 1.36.

The request to withdraw as attorney is not accepted in the above-identified application because the request lacks condition A) and B) above.

As to condition A), Because the USPTO does not recognize law firms, the request made upon behalf of the attorneys of a particular firm is insufficient. The attorney should be signing on behalf of all the attorneys of record in this application.

As to condition B), given the statements included in the request that, "The assignee as giving permission. Since there is no assignee of record that reason is unacceptable.

Kenneth J. Dorner
Special Programs Examiner
Patent Technology Center 3600
(571) 272-6587

KJD/slb: 03/16/06

UNITED STATES PATENT AND TRADEMARK OFFICE

UNITED STATES DEPARTMENT OF COMMERCE
United States Patent and Trademark Office
Address: COMMISSIONER FOR PATENTS
P.O. Box 1450
Alexandria, Virginia 22313-1450
www.uspto.gov

SEYFARTH SHAW LLP
131 S. DEARBORN ST., SUITE 2400
CHICAGO, IL 60603-5803

Mail Date: 04/21/2010

Applicant	: Jean Brossard	: DECISION ON REQUEST FOR
Patent Number	: 6923718	: RECALCULATION of PATENT
Issue Date	: 08/02/2005	: TERM ADJUSTMENT IN VIEW
Appliction No	: 09/872,228	: OF WYETH
Filed	: 06/01/2001	:
		:

The Patentee's Request for Recalculation is **DISMISSED.**

This Request is deemed ineligible for consideration for one or more of the following reasons:

(A). The patent for which PTA recalculation is requested is either a design or reissue application or is a reexamination proceeding;

(B). The patent for which PTA recalculation is requested resulted from a utility or plant application filed under 35 USC 111(a) before May 29, 2000 and no CPA filed in the application on/after May 29, 2000;

(C). The patent for which PTA recalculation is requested resulted from an international application in which the international filing date was before May 29, 2000 and no CPA filed in the application on/after May 29, 2000;

(D). The patent for which PTA recalculation is requested issued on/after March 2, 2010;

(E). The Request for Recalculation was filed more than 180 days after the grant date of the patent and the request was not filed within two months of a dismissal of a request for reconsideration of the of the patent term under 37 CFR 1.705(d);

(F). The Request for Recalculation is not solely limited to USPTO pre-Wyeth interpretation of 35 U.S.C. 154(b)(2)(A);

or

(G). A civil action was filed pursuant to 35 U.S.C. 154(b)(4)(A)concerning the same patent at issue in this request.

Patentee may file a reply to this decision dismissing the Request for Recalculation. Patentee must file such reply within one month or thirty days, whichever is longer, of the mail date of the decision dismissing the Request for Recalculation. No fee is required if patentee is asserting in the reply that the dismissal for ineligibility is improper.

Patentee should use document code PET.OP if electronically filing a reply to this dismissal. If the USPTO finds that the request was improperly deemed ineligible, the USPTO will mail applicant a recalculation determination.

Patentee should be aware that in order to preserve the right to review in the United States District Court for the District of Columbia of the USPTO patent term adjustment determination, patentee must ensure that he or she also take the steps required under 35 U.S.C. 154(b)(4)(A). Nothing in the request for recalculation should be construed as providing an alternative time frame for commencing a civil action under 35 U.S.C. 154 (b)(4)(A).

Any questions concerning this decision should be directed to the Office of Patent Legal Administration at 571-272-7702.

UNITED STATES PATENT AND TRADEMARK OFFICE

COMMISSIONER FOR PATENTS
UNITED STATES PATENT AND TRADEMARK OFFICE
P.O. BOX 1450
ALEXANDRIA, VA 22313-1450
www.uspto.gov

HICKMAN PALERMO TRUONG & BECKER/ORACLE
2055 GATEWAY PLACE
SUITE 550
SAN JOSE CA 95110-1089

COPY MAILED

MAR 0 3 2006

OFFICE OF PETITIONS

In re Application of :
Tan et al. :
Application No. 09/872,234 :
Filed: May 31, 2001 :
Docket No. 50277-1512 (OID 2000-059-01) :

DECISION ON PETITION

This is a decision on the petition under 37 CFR 1.181, filed October 12, 2005, and resubmitted on February 15, 2006.

This application was held abandoned for failure to respond timely to the final Office action, mailed on February 9, 2005, which set a three-month shortened statutory period for reply. In the apparent absence of a timely filed response, the application was held abandoned on May 10, 2005. A Notice of Abandonment was mailed on February 14, 2006.

In the petition, the practitioner asserted that neither he, the applicants, nor any employee of the law firm ever received the final Office action. The practitioner attested to the fact that a search of the file jacket and docket records indicated that the final Office action was not received. The practitioner submitted a copy of the docket record where the non-received Office action would have been entered had it been received and docketed. Accordingly, applicants requested that the Office withdraw the holding of abandonment, re-mail the final Office action, and restart the period for reply.

A review of the record indicates that applicants filed a change of correspondence address on November 16, 2004. Unfortunately, the Office did not correctly enter the change of correspondence address. For this reason, the USPTO mailed the final Office action and the Notice of Abandonment to an incorrect correspondence address.

In view of the above, the petition to withdraw the holding of abandonment is **granted**. The Notice of Abandonment was mailed in error and is hereby withdrawn. As the practitioner did not receive the original final Office action of February 9, 2005, **Technology Center Art Unit 2193 shall re-mail the final Office action and restart the period for response.**

This matter is being referred to Technology Center Art Unit 2193 for further action consistent with this decision.

Telephone inquiries concerning this decision may be directed to the undersigned at (571) 272-3211. All other questions regarding the status of the application or the examination process should be directed to the Technology Center.

Christina Tartera Donnell

Christina Tartera Donnell
Senior Petitions Attorney
Office of Petitions

UNITED STATES PATENT AND TRADEMARK OFFICE

Commissioner for Patents
United States Patent and Trademark Office
P.O. Box 1450
Alexandria, VA 22313-1450
www.uspto.gov

HICKMAN PALERMO TRUONG & BECKER/ORACLE
2055 GATEWAY PLACE
SUITE 550
SAN JOSE CA 95110-1089

COPY MAILED

MAR 2 6 2007

OFFICE OF PETITIONS

In re Application of	:	
Tan et al.	:	
Application No. 09/872,234	:	ON PETITION
Filed: May 31, 2001	:	
Attorney Docket No. 50277-1512	:	

This is a decision on the petition under 37 C.F.R. § 1.137(b), filed December 22, 2006, to revive the above-identified application.

The petition is **GRANTED.**

The petition satisfies the conditions for revival pursuant to the provisions of 37 CFR 1.137(b) in that (1) the reply in the form of a Request for Continued Examination (RCE) and an Amendment; (2) the petition fee; and (3) the required statement of unintentional delay have been received. Accordingly, the response has been accepted as having been unintentionally delayed.

This matter is being referred to Technology Center 2100 for processing of the Request for Continued Examination under 37 CFR 1.114 filed with the instant petition.

Telephone inquiries regarding this decision should be directed to the undersigned at (571) 272-3206.

Liana Walsh
Petitions Examiner
Office of Petitions

UNITED STATES PATENT AND TRADEMARK OFFICE

Commissioner for Patents
United States Patent and Trademark Office
P.O. Box 1450
Alexandria, VA 22313-1450
www.uspto.gov

TESTA, HURWITZ & THIBEAULT, LLP
HIGH STREET TOWER
125 HIGH STREET
BOSTON MA 02110

COPY MAILED

APR 14 2005

OFFICE OF PETITIONS

In re Application of :
Prasad Pamidi et al :
Application No. 09/872,240 :
Filed: May 31, 2001 :
Attorney Docket No. INL-057 :

ON PETITION

This is a decision on the petition under 37 CFR 1.182, filed January 16, 2002, to change the order of the names of the inventors.

The petition is **Granted**.

A Replacement Filing Receipt with the desired order of the names of the inventors accompanies this decision on petition.

The Office sincerely apologizes for the delay in replying to the instant petition.

Telephone inquiries regarding the above matter should be directed to the undersigned at (571)272-3208.

This matter is being referred to patent publication.

Karen Creasy

Karen Creasy
Petitions Examiner
Office of Petitions
Office of the Deputy Commissioner
for Patent Examination Policy

ATTACHMENT: REPLACEMENT FILING RECEIPT

UNITED STATES PATENT AND TRADEMARK OFFICE

COMMISSIONER FOR PATENTS
UNITED STATES PATENT AND TRADEMARK OFFICE
P.O. BOX 1450
ALEXANDRIA, VA 22313-1450
www.uspto.gov

Paper No. 12

ARNOLD S. MILOWSKY
AMERICAN HOME PRODUCTS CORPORATION
PATENT LAW DEPARTMENT – 2B
FIVE GIRALDA FARMS
MADISON, NJ 07940

COPY MAILED

OCT 27 2004

OFFICE OF PETITIONS

In re Application of	:	
Gary Grubb	:	
Application No. 09/872,250	:	ON PETITION
Filed: June 1, 2001	:	
Attorney Docket No. AM100058	:	

This is a decision on the petition, filed September 28, 2004, under 37 CFR 1.137(b) to revive the above-identified application.

The petition is **DISMISSED.**

Any request for reconsideration of this decision must be submitted within TWO (2) MONTHS from the mail date of this decision. Extensions of time under 37 CFR 1.136(a) are permitted. The reconsideration request should include a cover letter entitled "**Renewed Petition under 37 CFR 1.137(b)**." This is **not** final agency action within the meaning of 5 U.S.C. § 704.

A grantable petition under 37 CFR 1.137(b) must be accompanied by: (1) the required reply, unless previously filed; (2) the petition fee as set forth in 37 CFR 1.17(m); (3) a statement that the entire delay in filing the required reply from the due date for the reply until the filing of a grantable petition pursuant to 37 CFR 1.137(b) was unintentional; and (4) any terminal disclaimer (and fee as set forth in 37 CFR 1.20(d)) required by 37 CFR 1.137(c). Where there is a question as to whether either the abandonment or the delay in filing a petition under 37 CFR 1.137 was unintentional, the Commissioner may require additional information. See MPEP 711.03(c)(III)(C) and (D). The instant petition lack(s) item(s) (1).

The above-identified application became abandoned for failure to reply within the meaning of 37 CFR 1.113 in a timely manner to the final Office action mailed February 12, 2002, which set a shortened statutory period for reply of three (3) months. A reply under 37 CFR 1.113 is limited to an amendment that *prima facie* places the application in condition for allowance or a Notice of Appeal (and appeal fee required by 37 CFR 1.17(b)). No amendment *prima facie* placing the application in condition for allowance or Notice of Appeal (and appeal fee) was timely filed.

The file does not indicate a change of address has been submitted, although the address given on the petition differs from the address of record. If appropriate, a change of address should be filed

in accordance with MPEP 601.03. A courtesy copy of this decision is being mailed to the address given on the petition; however, the Office will mail all future correspondence solely to the address of record.

Further correspondence with respect to this matter should be addressed as follows:

By mail: Mail Stop PETITION
Commissioner for Patents
Post Office Box 1450
Alexandria, VA 22313-1450

By hand: U.S. Patent and Trademark Office
2011 South Clark Place
Customer Window
Crystal Plaza Two, Lobby, Room 1B03
Arlington, VA 22202

By facsimile: (703) 872-9306
ATTN: Office of Petitions

Telephone inquiries concerning this decision should be directed to the undersigned at (571) 272-3210.

Irvin Dingle
Petitions Examiner
Office of Petitions
Office of the Deputy Commissioner
for Patent Examination Policy

cc:

Arnold S. Milowsky
Wyeth, 500 Arcola Road
Patent Law Department, 3rd Floor
3114 Research Common
Collegeville, PA 19426

Attachment: Advisory Action

UNITED STATES PATENT AND TRADEMARK OFFICE

Commissioner for Patents
United States Patent and Trademark Office
P.O. Box 1450
Alexandria, VA 22313-1450
www.uspto.gov

COZEN O' CONNOR
1900 MARKET STREET, 5TH FLOOR
PHILADELPHIA, PA 19103-3508

COPY MAILED

JAN 18 2005

OFFICE OF PETITIONS

In re Application of	:	
Gary S. Grubb	:	
Application No. 09/872,250	:	ON PETITION
Filed: June 1, 2001	:	
Attorney Docket No. AM100058	:	

This is a decision on the renewed petition under 37 CFR 1.137(b), filed December 23, 2004, to revive the above-identified application.

The petition is **GRANTED.**

The above-identified application is being revived solely for purposes of continuity with a Request For Continued Examination (RCE) filed on December 23, 2004.

Telephone inquiries concerning this decision should be directed to Irvin Dingle at (571) 272-3210.

The matter is being forwarded to Technology Center AU 1617 for further processing.

Irvin Dingle
Petitions Examiner
Office of Petitions
Office of the Deputy Commissioner
for Patent Examination Policy

UNITED STATES PATENT AND TRADEMARK OFFICE

Commissioner for Patents
United States Patent and Trademark Office
Washington, D.C. 20231
www.uspto.gov
DIW 12-01

Paper No. 5

COPY MAILED

DEC 3 1 2001

OFFICE OF PETITIONS

LAHIVE & COCKFIELD
28 STATE STREET
BOSTON, MA 02109

In re Application of	:
Kenneth Lerman	:
Application No. 09/872,263	: DECISION REFUSING STATUS
Filed: 31 May, 2001	: UNDER 37 CFR 1.47(b)
Attorney Docket No. SYCS-035	:

This is in response to the petition under 37 CFR 1.47(b) filed on 28 September, 2001.

The petition is **DISMISSED**.

Rule 47 applicant is given TWO MONTHS from the mailing date of this decision to reply, correcting the below-noted deficiencies. Any reply should be entitled "Request for Reconsideration of Petition Under 37 CFR 1.47(b)," and should only address the deficiencies noted below, except that the reply may include an oath or declaration executed by the non-signing inventor. **FAILURE TO RESPOND WILL RESULT IN ABANDONMENT OF THE APPLICATION.** Extensions of time may be obtained in accordance with 37 CFR 1.136(a).

The above-identified application was filed on 31 May, 2001, without an executed oath or declaration.

Accordingly, on 2 August, 2001, a "Notice To File Missing Parts of Nonprovisional Application" was mailed, requiring an executed oath or declaration and a surcharge for its late filing.

In response, on 28 September, 2001, the present petition and petition fee were filed, accompanied by, *inter alia*, a declaration naming Kenneth Lerman as the sole inventor and signed by Ke Le on behalf of the non-signing inventor, an employment agreement between inventor Lerman and Sycamore Networks, Inc., and a declaration by Ke Le, Technology Officer for Sycamore Networks, Inc. Petitioners also provided a copy of an employment agreement between Lerman and Sycamore Networks, Inc., which states that Lerman agrees to assign to Sycamore all inventions during the period of employment (I) which relate at the time of conception or reduction to the practice of the Invention to the Company' business or actual or demonstrably anticipated research or development, or (ii) which were developed on any amount of the Company's equipment, supplies, facilities or trade secret information, or (iii) which resulted from any work Lerman performed for the Company, whether or not performed during business hours.

Petitioners state that a copy of the application papers were sent to Lerman, but that he refused, via email and telephone, to sign the declaration.

A grantable petition under 37 CFR 1.47(b) requires:

(1) proof that the non-signing inventor cannot be reached or refuses to sign the oath or declaration after having been presented with the application papers (specification, claims and drawings);

(2) an acceptable oath or declaration in compliance with 35 U.S.C. §§ 115 and 116;

(3) the petition fee;

(4) a statement of the last known address of the non-signing inventor;

(5) proof of proprietary interest, and

(6) proof of irreparable damage.

The petition lacks items (1), (2), and (6).

In regards to item (1), the declaration of Ke Le states that attorney Michael Reardon spoke with Lerman by phone, and that Lerman orally refused to sign the declaration. As an oral refusal must be proven by a statement from a person with first hand knowledge, Attorney Reardon must provide details of the oral refusal in an affidavit or declaration of facts.

In regards to item (2), the declaration is insufficient in that it has not been signed by a corporate officer (president, vice

president, treasurer, or secretary) of the Rule 47(b) applicant. If the declaration is not signed by a corporate officer, then proof of authority of the person signing on behalf of the corporation must be submitted in accordance with MPEP 409.03(b). The officer must identify his or her title in the declaration, and the officer's mailing address, residence, and citizenship must also be provided in the declaration. Attention is directed to 37 CFR 1.63(a)(3); MPEP §§ 605.02, 605.03. An oath or declaration in compliance with 37 CFR 1.63 and 1.64 is required.[1]

In regards to item (6), petitioners must establish irreparable damages in accordance with MPEP 409.03(g).

Further correspondence with respect to this matter should be addressed as follows:

By mail: Assistant Commissioner for Patents
Box DAC
Washington, D.C. 20231

By FAX: (703) 308-6916
Attn: Office of Petitions

By hand: Crystal Plaza Four, Suite 3C23
2201 S. Clark Place
Arlington, VA

Telephone inquiries related to this decision should be directed to the undersigned at (703)308-6918.

D Wood

Douglas I. Wood
Petitions Attorney
Office of Petitions
Office of the Deputy Commissioner
for Patent Examination Policy

[1] See MPEP 409.03(b).

UNITED STATES PATENT AND TRADEMARK OFFICE

Commissioner for Patents
United States Patent and Trademark Office
Washington, D.C. 20231
www.uspto.gov
DIW 05-02

Paper No. 8

LAHIVE & COCKFIELD
28 STATE STREET
BOSTON, MA 02109

COPY MAILED

MAY 1 3 2002

OFFICE OF PETITIONS

In re Application of	:
Kenneth Lerman	: DECISION ACCORDING STATUS
Application No. 09/872,263	: UNDER 37 CFR 1.47(b)
Filed: 31 May, 2001	:
Attorney Docket No. SYCS-035	:

This is in response to the renewed petition under 37 CFR 1.47(b) filed on 28 February, 2002.

The petition is **GRANTED**.

Petitioner has shown that a copy of the application was mailed to the non-signing inventor. The inventor, however, refused to sign the declaration via an E-mail to Ke Le, Technology Officer for Rule 47(b) applicant Sycamore Networks, Inc. Additionally, petitioners have shown proprietary interest by providing a copy of the employment agreement between the non-signing inventor and Rule 47(b) applicant. Lastly, petitioner has submitted a declaration in compliance with 37 CFR 1.63 and 1.64 and has demonstrated that such action is necessary to prevent irreparable damage.

This application and papers have been reviewed and found in compliance with 37 CFR 1.47(b). This application is hereby accorded Rule 1.47(b) status.

As provided in Rule 1.47(c), this Office will forward notice of this application's filing to the non-signing inventor. Notice of the filing of this application will also be published in the Official Gazette.

As no additional petition fee is due on reconsideration, the $130.00 petition fee charged to counsel's deposit account with

the present request for reconsideration is unnecessary and will be credited to counsel's deposit account, No. 12-0080.

The application file is being forwarded to the Office of Initial Patent Examination for further processing.

Telephone inquiries regarding this communication should be directed to the undersigned at 703.308.6918.

Douglas I. Wood
Petitions Attorney
Office of Petitions
Office of the Deputy Commissioner
for Patent Examination Policy

UNITED STATES PATENT AND TRADEMARK OFFICE

Commissioner for Patents
United States Patent and Trademark Office
Washington, D.C. 20231
www.uspto.gov
DIW 05-02

Kenneth Lerman
55 Main Street
Newtown, CT 06470

COPY MAILED

MAY 1 3 2002

OFFICE OF PETITIONS

In re Application of
Kenneth Lerman
Application No. 09/872,263
Filed: 31 May, 2001
For: SYSTEM AND METHOD FOR THE USE OF RESET LOGIC IN HIGH AVAILABILITY SYSTEMS

Dear Mr. Lerman:

You are named as the sole inventor in the above identified United States patent application, filed under the provisions of 35 U.S.C. 118 (United States Code), and 37 CFR 1.47(b), Rules of Practice in Patent Cases. Should a patent be granted on the application you will be designated therein as the sole inventor.

As a named inventor you are entitled to inspect any paper in the file wrapper of the application, order copies of all or any part thereof (at a prepaid cost per 37 CFR 1.19) or make your position of record in the application. Alternatively, you may arrange to do any of the preceding through a registered patent attorney or agent presenting written authorization from you. If you care to join the application, counsel of record (see below) would presumably assist you. Joining in the application would entail the filing of an appropriate oath or declaration by you pursuant to 37 CFR 1.63.

Telephone inquiries regarding this communication should be directed to Petitions Attorney Douglas I. Wood at 703 308-6918. Requests for information regarding your application should be directed to the File Information Unit at (703)308-2733. Information regarding how to pay for and order a copy of the application, or a specific paper in the application, should be directed to Certification Division at (703)308-9726 or 1(800)972-6382 (outside the Washington D.C. area).

for D Wood
Beverly M. Flanagan
Supervisory Petitions Examiner
Office of Petitions
Office of the Deputy Commissioner
for Patent Examination Policy

LAHIVE & COCKFIELD
28 STATE STREET
BOSTON, MA 02109

UNITED STATES PATENT AND TRADEMARK OFFICE

COMMISSIONER FOR PATENTS
UNITED STATES PATENT AND TRADEMARK OFFICE
WASHINGTON, D.C. 20231
www.uspto.gov

Paper No. 8

Fish & Richardson P.C.
4350 La Jolla Village Drive, Suite 500
San Diego, CA 92122

JUL 23 2003

In re Application of Yasushi Kajwara Application No. 09/872,269 Filed: May 31, 2001 For: SOCKET ASSEMBLY	)))))	DECISION ON REQUEST TO WITHDRAW FROM RECORD

This is a decision on the request to withdraw as attorney of record under 37 C.F.R. § 1.36, filed June 24, 2003.

A grantable request to withdraw as attorney of record should indicate thereon the present mailing addresses of the attorney(s) who is/are withdrawing from the record and of the applicant. The request for withdrawal must be signed by every attorney seeking to withdraw or contain a clear indication that one attorney is signing on behalf of another/others. A request to withdraw will not be approved unless at least 30 (thirty) days would remain between the date of approval and the later of the expiration date of a time to file a response or the expiration date of the maximum time period which can be extended under 37 C.F.R. § 1.136(a).

The request was signed by Scott C. Harris on behalf of all attorneys of record, Customer No. 20985.

Currently, a response to the outstanding Office action of January 15, 2003 is required. The maximum statutory period for filing a response expires July 15, 2003. Thus, there are less than thirty days remaining to file a response.

The request is DENIED.

Attorneys associated with Customer No. 20985 remain as attorneys of record. However, the correspondence address has been changed since change in correspondence address is effective upon filing. All future communications from the Office will be directed to the below-listed

address until otherwise notified by applicants.

The application file is being returned to TC 2800 Central Files where it awaits a response to the out standing Office action.

Any inquiry regarding this decision should be directed to Hien H. Phan at (703) 308-7502.

Hien H. Phan, Special Program Examiner
Technology Center 2800
Semiconductors, Electrical and Optical
Systems and Components

cc: Enplas Corporation
Nishioka Paten Office
5th Floor, Yamamoto Bldg.
2-6, Kagurazaka 4-chome
Shinjuku-ku, Tokyo
162-0825 JAPAN

AIR MAIL

UNITED STATES PATENT AND TRADEMARK OFFICE

COMMISSIONER FOR PATENTS
UNITED STATES PATENT AND TRADEMARK OFFICE
P.O. BOX 1450
ALEXANDRIA, VA 22313-1450
www.uspto.gov

Eitan Law Group
C/O Landon IP Inc.
1700 Diagonal Road – Suite 450
Alexandria, VA 22314

COPY MAILED
DEC 26 2007
OFFICE OF PETITIONS

In re Patent No. 7,088,731 :
Issue Date: August 8, 2006 :
Application No. 09/872,289 : NOTICE
Filed: June 1, 2001 :
Patentee(s): Ofer Iny :

This is a notice regarding a request for acceptance of a fee deficiency submission under 37 CFR 1.28 filed on January 24, 2007. On September 1, 1998, the Court of Appeals for the Federal Circuit held that 37 CFR 1.28(c) is the sole provision governing the time for correction of the erroneous payment of the issue fee as a small entity. **See DH Technology v. Synergystex International, Inc. 154 F.3d 1333, 47 USPQ2d 1865 (Fed. Cir. Sept. 1, 1998).**

The Office no longer investigates or rejects original or reissue applications under 37 CFR 1.56. **1098 Off. Gaz. Pat. Office 502 (January 3, 1989)**. Therefore, nothing in this Notice is intended to imply that an investigation was done.

Your fee deficiency submission under 37 CFR 1.28 is hereby **ACCEPTED**. Therefore, status as a small entity has been removed and all future fees paid must be paid at the large entity rate.

The Office acknowledges receipt of a Power of Attorney and Change of Correspondence Address filed on January 3, 2007. However, a change of correspondence address will not affect the fee address. Therefore, petitioner will not receive future correspondence, which **may** be mailed, regarding maintenance fees for the above patent, unless a "Fee Address Indication" and/or "Request for Customer Number" form is submitted. See USPTO Forms PTO/SB/47 and PTO/SB/125.

Inquiries related to this communication should be directed to the undersigned at (571) 272-3226.

Andrea Smith
Petitions Examiner
Office of Petitions

UNITED STATES PATENT AND TRADEMARK OFFICE

COMMISSIONER FOR PATENTS
UNITED STATES PATENT AND TRADEMARK OFFICE
P.O. BOX 1450
ALEXANDRIA, VA 22313-1450
www.uspto.gov

Paper No.

Michael D. Rechtin
FOLEY & LARDNER LLP
321 North Clark Street
Suite 2800
Chicago, IL 60610

MAILED

JAN 07 2005

Technology Center 2100

In re Application of:
Norman Feuer
Application No. 09/872,317
Filed: June 1, 2001
For: NETWORKED BROADCASTING SYSTEM WITH PROVISION FOR THE ADDITION OF ADVERTISEMENTS OR MESSAGES

DECISION ON REQUEST TO WITHDRAW AS ATTORNEY OR AGENT

This is a decision on the Request To Withdraw from Representation filed October 19, 2004.

A grantable request to withdraw as attorney of record should indicate thereon the present mailing addresses of the attorney(s) who is/are withdrawing from the record and of the applicant. The request for withdrawal must be signed by every attorney seeking to withdraw or contain a clear indication that one attorney is signing on behalf of another/others. A request to withdraw will not be approved unless at least 30 (thirty) days would remain between the date of approval and the later of the expiration date of a time to file a response or the expiration date of the maximum time period which can be extended under 37 C.F.R. § 1. 136(a). The effective date of withdrawal being the date of decision and not the date of request. See M.P.E.P. § 402.06. 37 C.F.R. § 1.36 further requires that the applicant or patent owner be notified of the withdrawal of the attorney or agent.

The request filed October 19, 2004 meets all the requirements. Accordingly the request is **GRANTED**.

All future communications from the Office will be directed to the below-listed address until otherwise notified by applicant. This correspondence address is provided by the withdrawn attorney(s). Applicant is reminded of the obligation to promptly notify the Patent and Trademark Office (Office) of any change in correspondence address to ensure receipt of all communications from the Office.

James R. Matthews

for Vincent N. Trans
Special Program Examiner
Technology Center 2100
Computer Architecture, Software, and
Information Security
(571) 272-3613

cc: Norman Feuer
3 Little Bay Harbor
Ponte Vedra, FL 32082

UNITED STATES PATENT AND TRADEMARK OFFICE

Commissioner for Patents
United States Patent and Trademark Office
Washington, D.C. 20231
www.uspto.gov
DIW 12-01

Paper No. 5

LAHIVE & COCKFIELD
28 STATE STREET
BOSTON, MA 02109

COPY MAILED

DEC 3 1 2001

OFFICE OF PETITIONS

In re Application of	:
Kenneth Lerman	:
Application No. 09/872,326	: DECISION REFUSING STATUS
Filed: 1 June, 2001	: UNDER 37 CFR 1.47(b)
Attorney Docket No. SYCS-038/P89	:

This is in response to the petition under 37 CFR 1.47(b) filed on 28 September, 2001.

The petition is **DISMISSED**.

Rule 47 applicant is given TWO MONTHS from the mailing date of this decision to reply, correcting the below-noted deficiencies. Any reply should be entitled "Request for Reconsideration of Petition Under 37 CFR 1.47(b)," and should only address the deficiencies noted below, except that the reply may include an oath or declaration executed by the non-signing inventor. **FAILURE TO RESPOND WILL RESULT IN ABANDONMENT OF THE APPLICATION.** Extensions of time may be obtained in accordance with 37 CFR 1.136(a).

The above-identified application was filed on 1 June, 2001, without an executed oath or declaration.

Accordingly, on 30 July, 2001, a "Notice To File Missing Parts of Nonprovisional Application" was mailed, requiring an executed oath or declaration and a surcharge for its late filing.

In response, on 28 September, 2001, the present petition and petition fee were filed, accompanied by, *inter alia*, a declaration naming Kenneth Lerman as the sole inventor and signed by Ke Le on behalf of the non-signing inventor, an employment agreement between inventor Lerman and Sycamore Networks, Inc., and a declaration by Ke Le, Technology Officer for Sycamore Networks, Inc. Petitioners also provided a copy of an employment agreement between Lerman and Sycamore Networks, Inc., which states that Lerman agrees to assign to Sycamore all inventions during the period of employment (i) which relate at the time of conception or reduction to the practice of the Invention to the Company' business or actual or demonstrably anticipated research or development, or (ii) which were developed on any amount of the Company's equipment, supplies, facilities or trade secret information, or (iii) which resulted from any work Lerman performed for the Company, whether or not performed during business hours.

Petitioners state that a copy of the application papers were sent to Lerman, but that he refused, via email and telephone, to sign the declaration.

A grantable petition under 37 CFR 1.47(b) requires:

(1) proof that the non-signing inventor cannot be reached or refuses to sign the oath or declaration after having been presented with the application papers (specification, claims and drawings);

(2) an acceptable oath or declaration in compliance with 35 U.S.C. §§ 115 and 116;

(3) the petition fee;

(4) a statement of the last known address of the non-signing inventor;

(5) proof of proprietary interest, and

(6) proof of irreparable damage.

The petition lacks items (1), (2), and (6).

In regards to item (1), the declaration of Ke Le states that attorney Michael Reardon spoke with Lerman by phone, and that Lerman orally refused to sign the declaration. As an oral refusal must be proven by a statement from a person with first hand knowledge, Attorney Reardon must provide details of the oral refusal in an affidavit or declaration of facts.

In regards to item (2), the declaration is insufficient in that it has not been signed by a corporate officer (president, vice

president, treasurer, or secretary) of the Rule 47(b) applicant. If the declaration is not signed by a corporate officer, then proof of authority of the person signing on behalf of the corporation must be submitted in accordance with MPEP 409.03(b). The officer must identify his or her title in the declaration, and the officer's mailing address, residence, and citizenship must also be provided in the declaration. Attention is directed to 37 CFR 1.63(a)(3); MPEP §§ 605.02, 605.03. Additionally, the application number is miscaptioned on the declaration submitted with the present petition.[1] An oath or declaration in compliance with 37 CFR 1.63 and 1.64, properly identifying the application by application number and filing date, is required.[2]

In regards to item (6), petitioners must establish irreparable damages in accordance with MPEP 409.03(g).

Further correspondence with respect to this matter should be addressed as follows:

By mail: Assistant Commissioner for Patents
Box DAC
Washington, D.C. 20231

By FAX: (703) 308-6916
Attn: Office of Petitions

By hand: Crystal Plaza Four, Suite 3C23
2201 S. Clark Place
Arlington, VA

Telephone inquiries related to this decision should be directed to the undersigned at (703)308-6918.

D Wood

Douglas I. Wood
Petitions Attorney
Office of Petitions
Office of the Deputy Commissioner
for Patent Examination Policy

---

[1]The application number is listed as 09/872,236 rather than 09/872,326.

[2]See MPEP 409.03(b).

UNITED STATES PATENT AND TRADEMARK OFFICE

Commissioner for Patents
United States Patent and Trademark Office
Washington, D.C. 20231
www.uspto.gov
DIW 05-02

Paper No. 8

LAHIVE & COCKFIELD
28 STATE STREET
BOSTON, MA 02109

COPY MAILED

MAY 1 3 2002

OFFICE OF PETITIONS

In re Application of	:	
Kenneth Lerman	:	
Application No. 09/872,326	:	DECISION ACCORDING STATUS
Filed: 1 June, 2001	:	UNDER 37 CFR 1.47(b)
Attorney Docket No. SYCS-038/P89	:	

This is in response to the renewed petition under 37 CFR 1.47(b) filed on 28 February, 2002.

The petition is **GRANTED**.

Petitioner has shown that a copy of the application was mailed to the non-signing inventor. The inventor, however, refused to sign the declaration via an E-mail to Ke Le, Technology Officer for Rule 47(b) applicant Sycamore Networks, Inc. Additionally, petitioners have shown proprietary interest by providing a copy of the employment agreement between the non-signing inventor and Rule 47(b) applicant. Lastly, petitioner has submitted a declaration in compliance with 37 CFR 1.63 and 1.64 and has demonstrated that such action is necessary to prevent irreparable damage.

This application and papers have been reviewed and found in compliance with 37 CFR 1.47(b). This application is hereby accorded Rule 1.47(b) status.

As provided in Rule 1.47(c), this Office will forward notice of this application's filing to the non-signing inventor. Notice of

the filing of this application will also be published in the Official Gazette.

As no additional petition fee is due on reconsideration, the $130.00 petition fee charged to counsel's deposit account with the present request for reconsideration is unnecessary and will be credited to counsel's deposit account, No. 12-0080.

The application file is being forwarded to the Office of Initial Patent Examination for further processing.

Telephone inquiries regarding this communication should be directed to the undersigned at 703.308.6918.

D Wood

Douglas I. Wood
Petitions Attorney
Office of Petitions
Office of the Deputy Commissioner
for Patent Examination Policy

UNITED STATES PATENT AND TRADEMARK OFFICE

Commissioner for Patents
United States Patent and Trademark Office
Washington, D.C. 20231
www.uspto.gov
DIW 05-02

Kenneth Lerman
55 Main Street
Newtown, CT 06470

COPY MAILED

MAY 1 3 2002

OFFICE OF PETITIONS

In re Application of
Kenneth Lerman
Application No. 09/872,326
Filed: 1 June, 2001
For: SYSTEM AND METHOD OF MAINTAINING A TIMED EVENT LIST

Dear Mr. Lerman:

You are named as the sole inventor in the above identified United States patent application, filed under the provisions of 35 U.S.C. 118 (United States Code), and 37 CFR 1.47(b), Rules of Practice in Patent Cases. Should a patent be granted on the application you will be designated therein as the sole inventor.

As a named inventor you are entitled to inspect any paper in the file wrapper of the application, order copies of all or any part thereof (at a prepaid cost per 37 CFR 1.19) or make your position of record in the application. Alternatively, you may arrange to do any of the preceding through a registered patent attorney or agent presenting written authorization from you. If you care to join the application, counsel of record (see below) would presumably assist you. Joining in the application would entail the filing of an appropriate oath or declaration by you pursuant to 37 CFR 1.63.

Telephone inquiries regarding this communication should be directed to Petitions Attorney Douglas I. Wood at 703 308-6918. Requests for information regarding your application should be directed to the File Information Unit at (703)308-2733. Information regarding how to pay for and order a copy of the application, or a specific paper in the application, should be directed to Certification Division at (703)308-9726 or 1(800)972-6382 (outside the Washington D.C. area).

for D Wood
Beverly M. Flanagan
Supervisory Petitions Examiner
Office of Petitions
Office of the Deputy Commissioner
for Patent Examination Policy

LAHIVE & COCKFIELD
28 STATE STREET
BOSTON, MA 02109

UNITED STATES PATENT AND TRADEMARK OFFICE

COMMISSIONER FOR PATENTS
UNITED STATES PATENT AND TRADEMARK OFFICE
WASHINGTON, D.C. 20231
www.uspto.gov

Paper No. 9

Michael A. Davis, Jr.
Haynes and Boone, L.L.P.
600 Congress Avenue
Suite 1600
Austin, TX 78701

MAIL

OCT 2 3 2002

DIRECTOR OFFICE
TECHNOLOGY CENTER 2100

In re Application of: Mitchell T. Berg)
Application No. 09/872,329)
Filed: June 1, 2001)
For: METHOD AND SYSTEM FOR COMMUNICATING A REQUEST PACKET IN RESPONSE TO A STATE)

DECISION ON REQUEST FOR WITHDRAWAL AS ATTORNEY

This is a decision on the Request To Withdraw from Representation filed October 7, 2002 and the Supplemental Request filed October 21, 2002.

A grantable request to withdraw as attorney of record should indicate thereon the present mailing addresses of the attorney(s) who is/are withdrawing from the record and of the applicant. The request for withdrawal must be signed by every attorney seeking to withdraw or contain a clear indication that one attorney is signing on behalf of another/others. A request to withdraw will not be approved unless at least 30 (thirty) days would remain between the date of approval and the later of the expiration date of a time to file a response or the expiration date of the maximum time period which can be extended under 37 C.F.R. § 1. 136(a). The effective date of withdrawal being the date of decision and not the date of request. See M.P.E.P. § 402.06. 37 C.F.R. § 1.36 further requires that the applicant or patent owner be notified of the withdrawal of the attorney or agent.

The request is **GRANTED**.

All future communications from the Office will be directed to the below-listed address until otherwise notified by applicant. This correspondence address is provided by the withdrawn attorney(s). Applicant is reminded of the obligation to promptly notify the Patent and Trademark Office (Office) of any change in correspondence address to ensure receipt of all communications from the Office.

FOR

Vincent N. Trans
Special Programs Examiner
Technology Center 2100
Computer Architecture and Software
(703) 305-9750

cc: SEED Intellectual Property Law Group PLLC
701 Fifth Avenue
Suite 6300
Seattle, Washington 98105

UNITED STATES PATENT AND TRADEMARK OFFICE

COMMISSIONER FOR PATEN
UNITED STATES PATENT AND TRADEMARK OFFI
WASHINGTON, D.C. 2023
www.uspto.g

Paper No. 6

Michael A. Davis, Jr.
HAYNES AND BOONE, LLP
600 Congress Avenue, Suite 1600
Austin, TX 78701-3236

MAIL

OCT 1 8 2002

DIRECTOR OFFICE
TECHNOLOGY CENTER 2100

In re Application of: Mitchell Berg)
Application No. 09/872,332)
Filed: June 1, 2001) **DECISION ON REQUEST FOR**
For: METHOD AND SYSTEM FOR) **WITHDRAWAL AS ATTORNEY**
IDENTIFYING A COMPUTING)
DEVICE IN RESPONSE TO A
REQUEST PACKET

This is a decision on the Request To Withdraw from Representation filed October 7, 2002.

A grantable request to withdraw as attorney of record should indicate thereon the present mailing addresses of the attorney(s) who is/are withdrawing from the record and of the applicant. The request for withdrawal must be signed by every attorney seeking to withdraw or contain a clear indication that one attorney is signing on behalf of another/others. A request to withdraw will not be approved unless at least 30 (thirty) days would remain between the date of approval and the later of the expiration date of a time to file a response or the expiration date of the maximum time period which can be extended under 37 C.F.R. § 1. 136(a). The effective date of withdrawal being the date of decision and not the date of request. See M.P.E.P. § 402.06. 37 C.F.R. § 1.36 further requires that the applicant or patent owner be notified of the withdrawal of the attorney or agent.

The request filed October 7, 2002 meets all the requirements. Accordingly the request is **GRANTED**.

All future communications from the Office will be directed to the below-listed address until otherwise notified by applicant. This correspondence address is provided by the withdrawn attorney(s). Applicant is reminded of the obligation to promptly notify the Patent and Trademark Office (Office) of any change in correspondence address to ensure receipt of all communications from the Office.

James R. Matthews
For Vincent N. Trans
Special Programs Examiner
Technology Center 2100
Computer Architecture and Software
(703) 305-9750

cc: SEED INTELLECTUAL PROPERTY LAW GROUP LLC
701 Fifth Avenue
Suite 6300
Seattle, WA 98105

UNITED STATES PATENT AND TRADEMARK OFFICE

UNITED STATES DEPARTMENT OF COMMERCE
United States Patent and Trademark Office
Address: COMMISSIONER FOR PATENTS
P.O. Box 1450
Alexandria, Virginia 22313-1450
www.uspto.gov

APPLICATION NO.	FILING DATE	FIRST NAMED INVENTOR	ATTORNEY DOCKET NO.	CONFIRMATION NO.
09/872,353	06/01/2001	Brian R. McCarthy	A019-P08127US	3630

33356 7590 12/08/2008
SoCAL IP LAW GROUP LLP
310 N. WESTLAKE BLVD. STE 120
WESTLAKE VILLAGE, CA 91362

EXAMINER
CHEVALIER, ALICIA ANN

ART UNIT	PAPER NUMBER
1794	

MAIL DATE	DELIVERY MODE
12/08/2008	PAPER

Please find below and/or attached an Office communication concerning this application or proceeding.

The time period for reply, if any, is set in the attached communication.

UNITED STATES PATENT AND TRADEMARK OFFICE

Commissioner for Patents
United States Patent and Trademark Office
P.O. Box 1450
Alexandria, VA 22313-1450
www.uspto.gov

wk

Mailed: 12/8/08

In re application of	:	
McCarthy et al.	:	DECISION ON
Serial No. 09/872,353	:	PETITION
Filed: June 1, 2001	:	
For: Sheet Of Printable Business Cards	:	

This is a decision on the PETITION UNDER 37 CFR 1.181 to the Group Director to instruct the Examiner to issue an action that present the rejections in a matter that complies with 37 C.F.R. 1.104(c)(2) and MPEP 707.07(f). Applicant references the Final Rejection dated May 28, 2008 and the Office Action dated November 1, 2007.

On November19, 2008, the instant petition under 37 CFR 1.181 was filed.

DECISION

Rule 1.181, Section (f) states:
§ 1.181 Petition to the Commissioner.

(f) Any petition under this part not filed within two months of the mailing date of the action or notice from which relief is requested may be dismissed as untimely, except as otherwise provided. This two-month period is not extendable

Accordingly, the instant petition is **DISMISSED.**

Jacqueline M. Stone

Jacqueline M. Stone, Director
Technology Center 1700
Chemical and Materials Engineering

Douglas N. Larson
SoCAL IP LAW GROUP LLP
310 N. WESTLAKE BLVD. STE 120
WESTLAKE VILLAGE CA 91362

UNITED STATES PATENT AND TRADEMARK OFFICE

COMMISSIONER FOR PATENTS
UNITED STATES PATENT AND TRADEMARK OFFICE
WASHINGTON, D.C. 20231
www.uspto.gov

Paper No. 9

Michael A. Davis, Jr.
Haynes and Boone, L.L.P.
600 Congress Avenue
Suite 1600
Austin, TX 78701

MAIL

Oct. 23 2002

DIRECTOR OFFICE
TECHNOLOGY CENTER 2100

In re Application of: Mitchell T. Berg	)	
Application No. 09/872,372	)	
Filed: June 1, 2001	)	**DECISION ON REQUEST FOR**
For: METHOD AND SYSTEM FOR	)	**WITHDRAWAL AS ATTORNEY**
ESTABLISHING A DATA	)	
STRUCTURE OF A CONNECTION	)	
WITH A CLIENT	)	

This is a decision on the Request To Withdraw from Representation filed October 7, 2002 and the Supplemental Request filed October 21, 2002.

A grantable request to withdraw as attorney of record should indicate thereon the present mailing addresses of the attorney(s) who is/are withdrawing from the record and of the applicant. The request for withdrawal must be signed by every attorney seeking to withdraw or contain a clear indication that one attorney is signing on behalf of another/others. A request to withdraw will not be approved unless at least 30 (thirty) days would remain between the date of approval and the later of the expiration date of a time to file a response or the expiration date of the maximum time period which can be extended under 37 C.F.R. § 1. 136(a). The effective date of withdrawal being the date of decision and not the date of request. See M.P.E.P. § 402.06. 37 C.F.R. § 1.36 further requires that the applicant or patent owner be notified of the withdrawal of the attorney or agent.

The request is **GRANTED**.

All future communications from the Office will be directed to the below-listed address until otherwise notified by applicant. This correspondence address is provided by the withdrawn attorney(s). Applicant is reminded of the obligation to promptly notify the Patent and Trademark Office (Office) of any change in correspondence address to ensure receipt of all communications from the Office.

For Vincent N. Trans
Special Programs Examiner
Technology Center 2100
Computer Architecture and Software
(703) 305-9750

cc: SEED Intellectual Property Law Group PLLC
701 Fifth Avenue
Suite 6300
Seattle, Washington 98105

UNITED STATES PATENT AND TRADEMARK OFFICE

COMMISSIONER FOR PATENTS
UNITED STATES PATENT AND TRADEMARK OFFICE
WASHINGTON, DC 20231
www.uspto.gov

Paper No. 7

HAYNES AND BOONE, LLP
600 CONGRESS AVENUE
SUITE 1600
AUSTIN TX 78701

MAILED

FEB 2 8 2003

Technology Center 2600

In re Application of :
Mitchell Berg :
Application No. 09/872,376 :
Filed: June 1, 2001 :
For: **METHOD AND SYSTEM FOR COMMUNICATING AN INFORMATION PACKET THROUGH MULTIPLE ROUTER DEVICES** :

DECISION ON REQUEST TO WITHDRAW AS ATTORNEY

This is a decision on the request to withdraw as attorney/agent of record filed on October 7, 2002 and October 21, 2002.

A grantable request to withdraw as attorney/agent of record must:
(1) indicate the present mailing address of the attorney(s)/agent(s) who seek(s) to withdraw, and
(2) be signed by each attorney/agent seeking to withdraw or clearly be signed on their behalf, and
(3) be *approved* at least thirty (30) days prior to the maximum extendable period for response to any outstanding Office Action, and
(4) indicate the address to which future correspondence should be mailed.

Petitioner has met all of the above. Accordingly, the request is **GRANTED**.

All attorneys and agents of record in this application, including all attorneys and agents associated with Customer No. 27685 are removed from record.

All future communications from the Office will be directed to the address listed below until otherwise notified by applicant. Applicant is reminded of the obligation to promptly notify the Patent and Trademark Office of any change in correspondence address to ensure receipt of all communications from the Office.

Krista Zele
Special Program Examiner
Technology Center 2600
Communications
(703) 305-4701

cc: Seed Intellectual property Law Group PLLC
701 Fifth Avenue, Suite 6300
Seattle, WA 98105

UNITED STATES PATENT AND TRADEMARK OFFICE

Commissioner for Patents
United States Patent and Trademark Office
P.O. Box 1450
Alexandria, VA 22313-1450
www.uspto.gov

Date Mailed : 10/13/09

Patent No. : 6799322 B2
Patent Issued : 09/28/04
Docket No. : **MM4441**

Re: Request for Certificate of Correction

Consideration has been given your request for the issuance of a certificate of correction for the above-identified patent under the provisions of Rule(s) 1.322.

Respecting the alleged errors in the documents filed on 06/16/08; please see attachments. **"Therefore, no correction(s) is in order here under United States Codes (U.S.C.) 254 and the Code of Federal Regulation (C.F.R.) 1322."**

In view of the foregoing, your request in this matter is hereby denied.

Lamonte M. Newsome
For Mary Diggs, Supervisor
Decisions & Certificates
Of Correction Branch
(703) 305-8309 or (703) 756-1574

David A. Einhorn, Esq.
Baker & Hostetler LLP
45 Rockefeller Plaza
New York NY 10111

LMN

SPE RESPONSE FOR CERTIFICATE OF CORRECTION

Paper No.: _____

DATE : 7/21/08

TO SPE OF : ART UNIT 2600

SUBJECT : Request for Certificate of Correction on Patent No.: 6799322

A response is requested with respect to the accompanying request for a certificate of correction.

Please complete this form and return with file, within 7 days to:
Palm location **7580, Certificates of Correction Branch – South Tower – 9A22**
If response is for an IFW, **return to employee (named below) via PUBSCofC Team in MADRAS.**
With respect to the change(s) requested, correcting Office and/or Applicant's errors, should the patent read as shown in the certificate of correction (COCIN)? No new matter should be introduced, nor should the scope or meaning of the claims be changed.

Lamonte M. Newsome

Thank You For Your Assistance

Certificates of Correction Branch
Tel. No. 703-305-8309
703-308-9390 #112

The request for issuing the above-identified correction(s) is hereby:
Note your decision on the appropriate box.

- ☐ **Approved** — **All** changes apply.
- ☐ **Approved in Part** — Specify below which changes **do not** apply.
- ☒ **Denied** — State the reasons for denial below.

Comments:
A 112, 2nd issue is raised. The first arm is for insertion movement. The second arm is for opposite movement of that of first arm. Changing "second arm pushes the disk out" to -- first arm pushes the disk out -- raises a question of contradicting the previously stated operation.

WAYNE YOUNG
SUPERVISORY PATENT EXAMINER

SPE

2627
Art Unit

UNITED STATES PATENT AND TRADEMARK OFFICE

Commissioner for Patents
United States Patent and Trademark Office
P.O. Box 1450
Alexandria, VA 22313-1450
www.uspto.gov

JOSEPH A. SAWYER, JR.
SAWYER LAW GROUP LLP
P.O. BOX 51418
PALO ALTO, CA 94303

COPY MAILED

JUN 2 2 2007

OFFICE OF PETITIONS

In re Application of
Eugene B. Hogenauer
Application No. 09/872,397
Filed: May 31, 2001
Attorney Docket No. 2096P

DECISION ON PETITION

This is a decision on the petition under the unintentional provisions of 37 CFR 1.137(b), filed February 7, 2007, to revive the above-identified application.

The petition is **GRANTED**.

The application became abandoned for failure to reply in a timely manner to the non-final Office action mailed, November 5, 2004, which set a shortened statutory period for reply of three (3) months. No extensions of time under the provisions of 37 CFR 1.136(a) were obtained. Accordingly, the application became abandoned on February 6, 2005.

The petition satisfies the requirements of 37 CFR 1.137(b) in that petitioner has supplied (1) the reply in the form of an amendment, (2) the petition fee of $750; and (3) a proper statement of unintentional delay.

It is not apparent whether the person signing the statement of unintentional delay was in a position to have firsthand or direct knowledge of the facts and circumstances of the delay at issue. Nevertheless, such statement is being treated as having been made as the result of a reasonable inquiry into the facts and circumstances of such delay. See 37 CFR 10.18(b) and Changes to Patent Practice and Procedure; Final Rule Notice, 62 Fed. Reg. 53131, 53178 (October 10, 1997), 1203 Off. Gaz. Pat. Office 63, 103 (October 21, 1997). In the event that such an inquiry has not been made, petitioner must make such an inquiry. If such inquiry results in the discovery that it is not correct that the entire delay in filing the required reply from the due date for the reply until the filing of a grantable petition pursuant to 37 CFR 1.137(b) was unintentional, petitioner must notify the Office.

There is no indication that the person signing the petition was ever given a power of attorney to prosecute the application. If the person signing the petition desires to receive future correspondence regarding this application, the appropriate power of attorney document must be submitted. While a courtesy copy of this decision is being mailed to the person signing the

petition, all future correspondence will be directed to the address currently of record until appropriate instructions are received.

In order to request or take action in a patent matter, the assignee must establish its ownership of the patent to the satisfaction of the Director. In this regard, a Statement under 37 CFR 3.73(b) must have either: (i) documentary evidence of a chain of title from the original owner to the assignee (*e.g.*, copy of an executed assignment), and a statement affirming that the documentary evidence of the chain of title from the original owner to the assignee was or concurrently is being submitted for recordation pursuant to § 3.11; or (ii) a statement specifying where documentary evidence of a chain of title from the original owner to the assignee is recorded in the assignment records of the Office (*e.g.*, reel and frame number). The power of attorney filed on January 12, 2007 does not include one of the above two options.

Telephone inquiries concerning this decision should be directed to April Wise (571) 272-1642.

This application is being referred to Technology Center AU 2195 for appropriate action by the Examiner in the normal course of business on the reply received February 7, 2007.

Irvin Dingle
Petitions Examiner
Office of Petitions

cc: DAVID R. STEVENS
STEVENS LAW GROUP
PO BOX 1667
SAN JOSE, CA 95109

UNITED STATES PATENT AND TRADEMARK OFFICE

COMMISSIONER FOR PATENTS
UNITED STATES PATENT AND TRADEMARK OFFICE
WASHINGTON, D.C. 20231
www.uspto.gov

Paper No. 4

SHIBOLETH YISRAELI ROBERTS & ZISMAN LLP
350 FIFTH AVE., 60TH FLOOR
NEW YORK, NY 10118

COPY MAILED
FEB 27 2002
OFFICE OF PETITIONS

In re Application	:	
Micha Risling	:	
Application No. 09/872,398	:	LETTER
Filed: June 1, 2001	:	
Attorney Docket No. N-95-7	:	

This is in response to the paper filed October 29, 2001 under 37 CFR 1.28(b) requesting that status as a Small Entity be removed.

In accordance with the October 29, 2001 request, status as a Small Entity has been removed.

This file is being forwarded to the Initial Patent Examination Unit.

Irvin Dingle
Petitions Examiner
Office of Petitions
Office of the Deputy Commissioner
for Patent Examination Policy

UNITED STATES PATENT AND TRADEMARK OFFICE

Commissioner for Patents
United States Patent and Trademark Office
P.O. Box 1450
Alexandria, VA 22313-1450
www.uspto.gov

WONG, CABELLO, LUTSCH, RUTHERFORD
& BRUCCULERI, L.L.P.
20333 SH 249
SUITE 600
HOUSTON, TX 77070

COPY MAILED
JUL 14 2006
OFFICE OF PETITIONS

In re Application of :
Banks, et al. :
Application No. 09/872,412 : ON PETITION
Filed: June 1, 2001 :
Attorney Docket No. 19923-05988 :

This is a decision on the petition under 37 CFR 1.137(b), filed June 20, 2006, to revive the above-identified application.

The petition is **GRANTED**.

This application became abandoned for failure to timely file a proper reply to the non-final Office action mailed December 8, 2005. Accordingly, this application became abandoned on March 9, 2006.

The file is being forwarded to Technology Center 2600 for review of the "Request For Reconsideration," filed June 20, 2006.

Telephone inquiries concerning this matter may be directed to the undersigned at (571) 272-3228.

Edward J. Tannouse
Petitions Attorney
Office of Petitions/Patent
Office of the Deputy Commissioner
for Patent Examination Policy

UNITED STATES PATENT AND TRADEMARK OFFICE

Commissioner for Patents
United States Patent and Trademark Office
P.O. Box 1450
Alexandria, VA 22313-1450
www.uspto.gov

COPY MAILED

JUL 31 2007

OFFICE OF PETITIONS

SUGHRUE, MION, ZINN, MACPEAK & SEAS, PLLC
2100 Pennsylvania Avenue, N.W.
Washington DC 20037-3213

In re Application of	:	
MOHRI et al.	:	
Application No. 09/872,421	:	DECISION ON PETITION
Filed: May 31, 2001	:	
Attorney Docket No. Q64554	:	

This is a decision on the petition filed March 14, 2007, which is being treated as a request under 37 CFR 3.81(b)[1] to correct the name of the assignee on the front page of the above-identified patent by way of a Certificate of Correction.

The request is **GRANTED**.

The patent file is being referred to the Certificates of Correction Branch for issuance of the requested Certificate of Correction.

Telephone inquiries concerning this decision may be directed to Denise Pothier at (571) 272-4787. Inquiries regarding the issuance of a certificate of correction should be directed to the Certificate of Correction Branch at (571) 272-4200.

Frances Hicks
Lead Paralegal
Office of Petitions

[1] *See* MPEP 1309, subsection II; and Official Gazette of June 22, 2004.

UNITED STATES PATENT AND TRADEMARK OFFICE

Commissioner for Patents
United States Patent and Trademark Office
P.O. Box 1450
Alexandria, VA 22313-1450
www.uspto.gov

COPY MAILED
SEP 29 2006
OFFICE OF PETITIONS

FENWICK & WEST LLP
SILICON VALLEY CENTER
801 CALIFORNIA STREET
MOUNTAIN VIEW CA 94041

In re Application of	:	
BADE, et al.	:	
Application No. 09/872,435	:	DECISION ON PETITION
Filed: June 1, 2001	:	TO WITHDRAW
Attorney Docket No. 22178-05012	:	FROM RECORD
	:	

This is a decision on the Request to Withdraw as attorney or agent of record under 37 C.F.R. § 1.36(b), filed June 5, 2006.

The request is **APPROVED**.

A grantable request to withdraw as attorney/agent of record must be signed by every attorney/agent seeking to withdraw or contain a clear indication that one attorney is signing on behalf of another/others. A request to withdraw will not be approved unless at least 30 (thirty) days would remain between the date of approval and the later of the expiration date of a time to file a response or the expiration date of the maximum time period which can be extended under 37 C.F.R. § 1.136(a).

The request was signed by Laura A. Majerus on behalf of all attorneys of record who are associated with customer No. 00758. All attorneys/agents associated with the Customer Number 00758 have been withdrawn. Applicant is reminded that there is no attorney of record at this time.

The request to change the correspondence of record is not acceptable as the requested correspondence address is not that of: (1) the first named signing inventor; or (2) an intervening assignee of the entire interest under 37 C.F.R 3.71. All future communications from the Office will be directed to the first named signing inventor at the first copied address below until otherwise properly notified by the applicant.

There is an outstanding Office action mailed August 24, 2006 that requires a reply from the applicant.

Telephone inquiries concerning this decision should be directed to Monica A. Graves at 571-272-7253.

Amelia Au
Petitions Examiner
Office of Petitions

cc: **Stephen L. Bade**
164 South 1200 East
Lindon, Utah 84042

cc: **Julie Stephenson**
Synopsys, Inc.
700 E. Middlefield Road
Mountain View, CA 94043

UNITED STATES PATENT AND TRADEMARK OFFICE

UNITED STATES DEPARTMENT OF COMMERCE
United States Patent and Trademark Office
Address: COMMISSIONER FOR PATENTS
P.O. Box 1450
Alexandria, Virginia 22313-1450
www.uspto.gov

APPLICATION NUMBER	FILING OR 371 (c) DATE	FIRST NAMED APPLICANT	ATTY. DOCKET NO./TITLE
09/872,435	06/01/2001	Stephen L. Bade	22178-05012

CONFIRMATION NO. 2097

OC000000020576074

758
FENWICK & WEST LLP
SILICON VALLEY CENTER
801 CALIFORNIA STREET
MOUNTAIN VIEW, CA 94041

Date Mailed: 09/26/2006

NOTICE REGARDING CHANGE OF POWER OF ATTORNEY

This is in response to the Power of Attorney filed 06/05/2006.

- The withdrawal as attorney in this application has been accepted. Future correspondence will be mailed to the new address of record. 37 CFR 1.33.

MONICA A GRAVES
OP (571) 272-7253

FORMER ATTORNEY/AGENT COPY

UNITED STATES PATENT AND TRADEMARK OFFICE

Commissioner for Patents
United States Patent and Trademark Office
P.O. Box 1450
Alexandria, VA 22313-1450
www.uspto.gov

LUCE, FORWARD, HAMILTON & SCRIPPS
11988 EL CAMINO REAL, SUITE 200
SAN DIEGO CA 92130

COPY MAILED

DEC 13 2004

OFFICE OF PETITIONS

In re Application of	:	
Dennis g. Olson	:	
Application No. 09/872,441	:	DECISION GRANTING PETITION
Filed: June 1, 2001	:	UNDER 37 CFR 1.137(b)
Attorney Docket No. SUREB-56121	:	

This is a decision on the petition under 37 CFR 1.137(b), filed October 4, 2004, to revive the above-identified application.

The petition is **GRANTED**.

The petition satisfies the conditions for revival pursuant to the provisions of 37 CFR 1.137(b) in that (1) the reply in the form of an amendment; (2) the petition fee; and (3) the required statement of unintentional delay have been received. Accordingly, the reply to the final Office action of December 2, 2003, is accepted as having been unintentionally delayed.

Telephone inquiries concerning this decision should be directed to the undersigned at (571) 272-3208.

The application file is being referred to Technology Center AU 2881.

Karen Creasy

Karen Creasy
Petitions Examiner
Office of Petitions
Office of the Deputy Commissioner
for Patent Examination Policy

DATE 9-20-07 APPLICATION NUMBER 09/872461

DOC CODE Pet Rec. TC DOC DATE 09/21/07

DELIVER THE ATTACHED FIFLE/DOCUMENT TO THE TC SCANNING CENTER

CONTRACTOR: THE ATTACHED FILE/DOCUMENT MUST BE INDEXED AND SCANNED INTO IFW WITHIN **8** WORK HOURS; UPLOADING OF THE SCANNED IMAGES SHOULD OCCUR NO LATER THAN **16** WORK HOURS FOLLOWING RECEIPT OF THIS REQUEST

AFTER SCANNING, ORIGINAL DOCUMENTS SHOULD BE BOXED IN ACCORDANCE WITH INSTRUCTIONS

UNITED STATES PATENT AND TRADEMARK OFFICE

Commissioner for Patents
United States Patent and Trademark Office
P.O. Box 1450
Alexandria, VA 22313-1450
www.uspto.gov

LEE, HONG, DEGERMAN, KANG & SCHMADEKA
660 S. FIGUEROA STREET
Suite 2300
LOS ANGELES CA 90017

COPY MAILED
SEP 21 2007
OFFICE OF PETITIONS

In re Application of	:	
Kang Soo Seo et al	:	
Application No. 09/872,461	:	DECISION ON PETITION
Filed: June 1, 2001	:	
Attorney Docket No. 2080-3-24	:	

This is a decision on the petition under 37 CFR 1.137(b), filed January 12, 2007, to revive the above-identified application.

The petition is **GRANTED.**

The application became abandoned for failure to reply in a timely manner to the non-final Office action mailed September 13, 2005, which set a shortened statutory period for reply of three (3) months. No extensions of time were obtained under the provisions of 37 CFR 1.136(a). Accordingly, the application became abandoned on December 14, 2005. A Notice of Abandonment was mailed on March 21, 2006.

The petition satisfies the requirements of 37 CFR 1.137(b) in that petitioner has supplied (1) the required reply in the form of an amendment, (2) the petition fee of $1,500, and (3) a proper statement of unintentional delay. Accordingly, the failure to timely reply to the non-final Office action of September 13, 2005 is accepted as being unintentionally delayed.

This application is being referred to Technology Center AU 2616 for appropriate action in the normal course of business on the reply received January 12, 2007.

Telephone inquiries concerning this decision should be directed to the undersigned at (571) 272-3218.

Frances Hicks
Petitions Examiner
Office of Petitions

UNITED STATES PATENT AND TRADEMARK OFFICE

Commissioner for Patents
United States Patent and Trademark Office
P.O. Box 1450
Alexandria, VA 22313-1450
www.uspto.gov

ROBERT M BAUER, ESQ.
LACKENBACH SIEGEL, LLP
1 CHASE ROAD
SCARSDALE NY 10583

COPY MAILED
FEB 24 2006
OFFICE OF PETITIONS

In re Application of :
Veli-Pekka Ketonen et al. :
Application No. 09/872,476 :
Filed: June 1, 2001 :
Attorney Docket No. NOKIA.05US(6173/4) :

ON PETITION

This is a decision on the petition filed December 27, 2005 under 37 CFR 1.137(b),[1] to revive the above-identified application.

The petition under 37 CFR 1.137 (b) is **GRANTED**.

This application became abandoned July 11, 2005 for failure to timely pay the issue fee on or before July 8, 2005. Accordingly, a Notice of Abandonment was mailed September 21, 2005.

The issue fee, publication fee and petition fee have been applied. All other requirements of 37 CFR 1.137(b) having now been met, this application file is being forwarded to the Publishing Division to be processed into a patent.

Telephone inquiries concerning this matter may be directed to the undersigned Petitions Attorney at (571) 272-3212.

Patricia Faison-Ball
Senior Petitions Attorney
Office of Petitions

---

[1] Effective December 1, 1997, the provisions of 37 CFR 1.137(b) now provide that where the delay in reply was unintentional, a petition may be filed to revive an abandoned application or a lapsed patent pursuant to 37 CFR 1.137(b). A grantable petition filed under the provisions of 37 CFR 1.137(b) must be accompanied by:

(1) the required reply, unless previously filed. In a nonprovisional application abandoned for failure to prosecute, the required reply may be met by the filing of a continuing application. In a nonprovisional application filed on or after June 8, 1995, and abandoned for failure to prosecute, the required reply may also be met by the filing of a request for continued examination in compliance with § 1.114. In an application or patent, abandoned or lapsed for failure to pay the issue fee or any portion thereof, the required reply must be the payment of the issue fee or any outstanding balance thereof.

(2) the petition fee as set forth in 37 CFR 1.17(m);

(3) a statement that the entire delay in filing the required reply from the due date for the reply until the filing of a grantable petition pursuant to 37 CFR 1.137(b) was unintentional. The Commissioner may required additional information where there is a question whether the delay was unintentional; and

(4) any terminal disclaimer (and fee as set forth in 37 CFR 1.20(d)) required pursuant to 37 CFR 1.137(c)).

UNITED STATES PATENT AND TRADEMARK OFFICE

Commissioner for Patents
United States Patent and Trademark Office
P.O. Box 1450
Alexandria, VA 22313-1450
www.uspto.gov

LADAS & PARRY
5670 WILSHIRE BOULEVARD, SUITE 2100
LOS ANGELES CA 90036-5679

COPY MAILED

AUG 0 2 2005

OFFICE OF PETITIONS

In re Application of
Rutherglen, et al.
Application No. 09/872,502
Filed: June 1, 2001
Attorney Docket No. 0104632-991110
For: SECURE DATA ACCESSING SYSTEM AND METHOD

DECISION ON PETITION

This is a decision on the petition under 37 CFR 1.137(b), filed June 15, 2005 (certificate of mailing date June 13, 2005), to revive the above-identified application.

This application became abandoned for failure to timely and properly reply to the non-final Office action, mailed October 6, 2004, which set an extendable three month period for reply. Having obtained no extensions of time, this application became abandoned on January 7, 2005 for failure to timely reply. A Notice of Abandonment was mailed on April 29, 2005.

Petitioners have submitted an amendment in reply to the October 6, 2004 non-final Office action, an acceptable statement of the unintentional nature of the delay in responding to the October 6, 2004 non-final Office action, and the instant petition and required petition fee.

The petition under 37 CFR 1.137(b) is **GRANTED**.

The Revocation and Power of Attorney and Appointment of New Power of Attorney, filed June 15, 2005 (certificate of mailing date June 13, 2005), has been accepted and made of record. Please find enclosed Notices relating to the power of attorney change.

After the mailing of this decision, the application will be forwarded to Technology Center G.A.U. 2136 for consideration of the amendment filed June 15, 2005 (certificate of mailing date June 13, 2005).

Telephone inquiries concerning this decision should be directed to the undersigned at (571) 272-3230.

E. Shirene Willis
Senior Petitions Attorney
Office of Petitions

enclosures: Notices regarding change in power of attorney

UNITED STATES PATENT AND TRADEMARK OFFICE

Commissioner for Patents
United States Patent and Trademark Office
P.O. Box 1450
Alexandria, VA 22313-1450
www.uspto.gov

COPY MAILED

APR 0 7 2008

OFFICE OF PETITIONS

LADAS & PARRY
5670 WILSHIRE BOULEVARD, SUITE 2100
LOS ANGELES CA 90036-5679

In re Application of	:	
Jason John Rutherglen et al	:	
Application No. 09/872,502	:	DECISION GRANTING PETITION
Filed: June 1, 2001	:	UNDER 37 CFR 1.313(c)(2)
Attorney Docket No. 0104632-991110	:	

This is a decision on the petition under 37 CFR 1.313(c)(2), filed April 4, 2008, to withdraw the above-identified application from issue after payment of the issue fee.

The petition is **GRANTED**.

The above-identified application is withdrawn from issue for consideration of a submission under 37 CFR 1.114 (request for continued examination). *See* 37 CFR 1.313(c)(2).

Petitioner is advised that the issue fee paid on February 15, 2008 cannot be refunded. If, however, this application is again allowed, petitioner may request that it be applied towards the issue fee required by the new Notice of Allowance.[1]

The petition is not signed by an attorney of record. Nevertheless, in accordance with 37 CFR 1.34, the signature of Mr. C. Scott Talbot appearing on the correspondence shall constitute a representation to the United States Patent and Trademark Office that he is authorized to represent the particular party on whose behalf he acts. If Mr. Talbot desires to receive future correspondence regarding this file, the appropriate power of attorney documents must be submitted. A courtesy copy of this decision is being mailed to petitioner herein. However, until otherwise instructed, all future correspondence regarding this application file will be directed solely to the above-noted correspondence address of record.

---

[1] *The request to apply the issue fee to the new Notice may be satisfied by completing and returning the new Part B – Fee(s) Transmittal Form (along with any balance due at the time of submission). Petitioner is advised that the Issue Fee Transmittal Form must be completed and timely submitted to avoid abandonment of the application.*

Telephone inquiries should be directed to the undersigned at (571) 272-3208.

This application is being referred to Technology Center AU 2136 for processing of the request for continued examination under 37 CFR 1.114 and for consideration of the concurrently filed IDS.

Karen Creasy

Karen Creasy
Petitions Examiner
Office of Petitions

cc:

COOLEY GODWARD LLP
ATTN: PATENT GROUP
777 6TH STREET, N.W., SUITE 1100
WASHINGTON DC 20001

UNITED STATES PATENT AND TRADEMARK OFFICE

COMMISSIONER FOR PATENTS
UNITED STATES PATENT AND TRADEMARK OFFICE
P.O. BOX 1450
ALEXANDRIA, VA 22313-1450
www.uspto.gov

Paper No. 14

BURNS DOANE SWECKER & MATHIS LLP
POST OFFICE BOX 1404
ALEXANDRIA, VA 22313-1404

COPY MAILED

FEB 10 2004

OFFICE OF PETITIONS

In re Application of :
Lawrence R. Green, et al. :
Application No. 09/872,503 :
Filed: May 31, 2001 :
Attorney Docket No. 033599-019 :

ON PETITION

This is a decision on the petition under 37 CFR 1.137(b), filed January 29, 2004, to revive the above-identified application.

The petition is **GRANTED.**

The above-identified application became abandoned for failure to reply in a timely manner to the Notice to Comply with Requirements for Patent Applications Containing Nucleotide Sequence and/or Amino Acid Sequence Disclosures (Notice) mailed October 11, 2002. The Notice set a period for reply of two (2) months from the mail date of the Notice. No extensions of time under the provisions of 37 CFR 1.136(a) were obtained. Accordingly, the above-identified application became abandoned on December 12, 2002.

Receipt is acknowledged of the Preliminary Amendment filed January 29, 2004, with the instant petition.

The Verified Statement Claiming Small Entity Status of January 29, 2004, has been made of record and small entity status has been accorded.

The application file is being forwarded to the Office of Initial Patent Examination for further processing.

Telephone inquiries concerning this decision should be directed to the undersigned at (703) 306-5594.

Retta Williams

Retta Williams
Petitions Examiner
Office of Petitions
Office of the Deputy Commissioner
for Patent Examination Policy

UNITED STATES PATENT AND TRADEMARK OFFICE

OFFICE

SERIAL NUMBER	FILING DATE	FIRST NAMED APPLICANT	ATTORNEY DOCKET NO.
09/872509	06/01/01	ISHIGURO, RYUJI	450100-4406.1

FROMMER LAWRENCE & HAUG
745 FIFTH AVENUE- 10TH FL.
NEW YORK NY 10151

EXAMINER	
SONG, HO	
ART UNIT	PAPER NUMBER
2135	

DATE MAILED: 9/22/07

NOTICE OF RESCINDED ABANDONMENT

☐ **In response to your communication filed** 2/22/07

☒ **Through inadvertence, a Notice of Abandonment was mailed in the above-identified application. The Notice of Abandonment is hereby rescinded.**

FOR Cheryl McKenn
Manager, Publications Division
Office of Patent Publication
571-272-4200

UNITED STATES PATENT AND TRADEMARK OFFICE

UNDER SECRETARY OF COMMERCE FOR INTELLECTUAL PROPERTY AND
DIRECTOR OF THE UNITED STATES PATENT AND TRADEMARK OFFICE
WASHINGTON, DC 20231
www.uspto.gov

#8

Gary, Cary, Ware & Freidenrich, LLP
1755 Embarcadero Road
Palo Alto, CA 94303-3340

MAILED

MAR 25 2003

Office of the Director
Group 3600

In re application of
David Hodson et al.
Application No. 09/872,514
Filed: June 1, 2001
For: INTEGRATED ELECTRONIC SHOPPING CART SYSTEM AND METHOD

DECISION ON REQUEST FOR WITHDRAWAL OF ATTORNEY

This is a decision on the request filed on February 6, 2003, under 37 CFR 1.36 and MPEP 402.06, requesting permission to withdraw as the attorney of record in the above-identified application.

The request is **NOT APPROVED**.

Under 37 CFR 1.36 an attorney may withdraw only upon application to and approval by the Commissioner. It should be noted that a withdrawal is effective when approved, not when filed. Besides giving due notice to his or her client and delivering to the client all papers and property to which the client is entitled as specified under 37 CFR 10.40, approval of such a request requires that the following conditions be met:

A) Each attorney of record must sign the notice of withdrawal, or the notice must contain a clear indication of one attorney signing on behalf of another, because the Office does not recognize law firms;

B) A proper reason for the withdrawal as enumerated in 37 CFR 10.40(b) or subsection (1)-(6) of 37 CFR 10.40(c) must be provided; and

C) If withdrawal is requested in accordance with 37 CFR 10.40(c) above, there must be at least 30 days between approval of the withdrawal and the later of the expiration date of a time period for reply or the expiration date of the period which can be obtained by a petition and fee for extension of time under 37 CFR 1.136(a).

The request to withdraw as attorney is not accepted in the above-identified application because the request lacks condition B) above.

Given the statement included in the request that, "Applicant has disengaged from representing the Assignee," it is not clear that the statements satisfy one of the valid reasons for withdrawal under 37 CFR 10.40 (b)(1)-(4) or (c)(1)-(6).

Kenneth J. Dorner
Special Programs Examiner
Patent Technology Center 3600
(703) 308-0866
(703) 605-0586 (facsimile)

KJD/tpl: 3/19/03

UNITED STATES PATENT AND TRADEMARK OFFICE

COMMISSIONER FOR PATENTS
UNITED STATES PATENT AND TRADEMARK OFFICE
P.O. BOX 1450
ALEXANDRIA, VA 22313-1450
www.uspto.gov

DLA PIPER RUDNICK GRAY CARY US, LLP
2000 UNIVERSITY AVENUE
E. PALO ALTO, CA 94303-2248

COPY MAILED
APR 19 2006
OFFICE OF PETITIONS

In re Application of :
Hodson et al. :
Application No. 09/872,514 :
Filed: June 1, 2001 :
Atty Docket No.: 355310-991201 :

This is a decision in response to the petition under 37 CFR 1.137(b), filed March 3, 2006, to revive the above-identified application.

This Petition is hereby **granted**.

The above-identified application became abandoned for failure to reply in a timely manner to the Office communication, mailed June 3, 2004. The Office communication set a one (1) month period for reply, and provided for extensions of time under 37 CFR 1.136(a).

Applicant filed a reply on October 7, 2004; however the reply (Amendment) was not in compliance with 37 CFR 1.121. Efforts to Notify Applicant were unsuccessful when a Notice of Non-compliant Amendment, mailed October 27, 2004, was returned to this Office by the United States Postal Service ("USPS").

No reply having been received, the application became abandoned on July 4, 2004. A Notice of Abandonment was mailed on May 12, 2005.

With the instant petition, Petitioner has satisfied the requirements of a grantable petition under 37 CFR 1.137(b). An Amendment in response to the June 3, 2004 Office action is filed with the instant petition. Accordingly, the petition is granted.

This application is being forwarded to Technology Center Art Unit 3625 for processing of the Amendment, filed March 3, 2006, in due course.

Telephone inquiries concerning this matter should be directed to the undersigned at (571) 272-3232.

Derek L. Woods
Attorney
Office of Petitions

Under the Paperwork Reduction Act of 1995, no persons are required to respond to a collection of information unless it displays valid OMB control number.

PETITION TO ACCEPT UNINTENTIONALLY DELAYED PAYMENT OF MAINTENANCE FEE IN AN EXPIRED PATENT (37 CFR 1.378(c))

Patent Number	Issue Date (YYYY-MM-DD)	Application Number	Filing Date (YYYY-MM-DD)	Docket Number (if applicable)
6,565,538	2003-05-20	09/872,547	2001-06-02	

CAUTION: Maintenance fee (and surcharge, if any) payment must correctly identify: (1) the patent number and (2) the application number of the actual U.S. application leading to issuance of that patent to ensure the fee(s) is/are associated with the correct patent. 37 CFR 1.366(c) and (d).

SMALL ENTITY
☒ Patentee claims, or has previously claimed, small entity status. See 37 CFR 1.27.

LOSS OF ENTITLEMENT TO SMALL ENTITY STATUS
☐ Patentee is no longer entitled to small entity status. See 37 CFR 1.27(g)

NOT Small Entity		Small Entity	
Fee	Code	Fee	Code
○ 3 ½ year	(1551)	◉ 3 ½ year	(2551)
○ 7 ½ year	(1552)	○ 7 ½ year	(2552)
○ 11 ½ year	(1553)	○ 11 ½ year	(2553)

SURCHARGE
The surcharge required by 37 CFR 1.20(i)(2) (Fee Code 1558) must be paid as a condition of accepting unintentionally delayed payment of the maintenance fee.

MAINTENANCE FEE (37 CFR 1.20(e)-(g))
The appropriate maintenance fee must be submitted with this petition.

STATEMENT
THE UNDERSIGNED CERTIFIES THAT THE DELAY IN PAYMENT OF THE MAINTENANCE FEE TO THIS PATENT WAS UNINTENTIONAL

PETITIONER(S) REQUEST THAT THE DELAYED PAYMENT OF THE MAINTENANCE FEE BE ACCEPTED AND THE PATENT REINSTATED

THIS PORTION MUST BE COMPLETED BY THE SIGNATORY OR SIGNATORIES

37 CFR 1.378(d) states: "Any petition under this section must be signed by an attorney or agent registered to practice before the Patent and Trademark Office, or by the patentee, the assignee, or other party in interest."

I certify, in accordance with 37 CFR 1.4(d)(4) that I am

◉ An attorney or agent registered to practice before the Patent and Trademark Office

○ A sole patentee

○ A joint patentee; I certify that I am authorized to sign this submission on behalf of all the other patentees.

○ A joint patentee; all of whom are signing this e-petition

○ The assignee of record of the entire interest

Patent Practitioner			
A signature of the applicant or representative is required in accordance with 37 CFR 1.33 and 10.18. Please see 37 CFR 1.4(d) for the form of the signature			
Signature	/James D. Wright/	Date (YYYY-MM-DD)	2007-09-08
Name	James D. Wright	Registration Number	43291

This collection of information is required by 37 CFR 1.378(c). The information is required to obtain or retain a benefit by the public which is to file (and by the USPTO to process) an application. Confidentiality is governed by 35 U.S.C. 122 and 37 CFR 1.11 and 1.14. This collection is estimated to take 1 hour to complete, including gathering, preparing, and submitting the completed application form to the USPTO. Time will vary depending upon the individual case. Any comments on the amount of time you require to complete this form and/ or suggestions for reducing this burden, should be sent to the Chief Information Officer, U.S. Patent and Trademark Office, U.S. Department of Commerce, P.O. Box 1450, Alexandria, VA 22313-1450. DO NOT SEND FEES OR COMPLETED FORMS TO THIS ADDRESS. **This form can only be used when in conjunction with EFS-Web. If this form is mailed to the USPTO, it may cause delays in reinstating the patent.**

Privacy Act Statement

The Privacy Act of 1974 (P.L. 93-579) requires that you be given certain information in connection with your submission of the attached form related to a patent application or patent. Accordingly, pursuant to the requirements of the Act, please be advised that: (1) the general authority for the collection of this information is 35 U.S.C. 2(b)(2); (2) furnishing of the information solicited is voluntary; and (3) the principal purpose for which the information is used by the U.S. Patent and Trademark Office is to process and/or examine your submission related to a patent application or patent. If you do not furnish the requested information, the U.S. Patent and Trademark Office may not be able to process and/or examine your submission, which may result in termination of proceedings or abandonment of the application or expiration of the patent.

The information provided by you in this form will be subject to the following routine uses:

1. The information on this form will be treated confidentially to the extent allowed under the Freedom of Information Act (5 U.S.C. 552) and the Privacy Act (5 U.S.C. 552a). Records from this system of records may be disclosed to the Department of Justice to determine whether the Freedom of Information Act requires disclosure of these record s.

2. A record from this system of records may be disclosed, as a routine use, in the course of presenting evidence to a court, magistrate, or administrative tribunal, including disclosures to opposing counsel in the course of settlement negotiations.

3. A record in this system of records may be disclosed, as a routine use, to a Member of Congress submitting a request involving an individual, to whom the record pertains, when the individual has requested assistance from the Member with respect to the subject matter of the record.

4. A record in this system of records may be disclosed, as a routine use, to a contractor of the Agency having need for the information in order to perform a contract. Recipients of information shall be required to comply with the requirements of the Privacy Act of 1974, as amended, pursuant to 5 U.S.C. 552a(m).

5. A record related to an International Application filed under the Patent Cooperation Treaty in this system of records may be disclosed, as a routine use, to the International Bureau of the World Intellectual Property Organization, pursuant to the Patent Cooperation Treaty.

6. A record in this system of records may be disclosed, as a routine use, to another federal agency for purposes of National Security review (35 U.S.C. 181) and for review pursuant to the Atomic Energy Act (42 U.S.C. 218(c)).

7. A record from this system of records may be disclosed, as a routine use, to the Administrator, General Services, or his/her designee, during an inspection of records conducted by GSA as part of that agency's responsibility to recommend improvements in records management practices and programs, under authority of 44 U.S.C. 2904 and 2906. Such disclosure shall be made in accordance with the GSA regulations governing inspection of records for this purpose, and any other relevant (i.e., GSA or Commerce) directive. Such disclosure shall not be used to make determinations about individuals.

8. A record from this system of records may be disclosed, as a routine use, to the public after either publication of the application pursuant to 35 U.S.C. 122(b) or issuance of a patent pursuant to 35 U.S.C. 151. Further, a record may be disclosed, subject to the limitations of 37 CFR 1.14, as a routine use, to the public if the record was filed in an application which became abandoned or in which the proceedings were terminated and which application is referenced by either a published application, an application open to public inspections or an issued patent.

9. A record from this system of records may be disclosed, as a routine use, to a Federal, State, or local law enforcement agency, if the USPTO becomes aware of a violation or potential violation of law or regulation.

UNITED STATES PATENT AND TRADEMARK OFFICE

Commissioner for Patents
United States Patent and Trademark Office
P.O. Box 1450
Alexandria, VA 22313-1450
www.uspto.gov

In re Patent No. 6565538
Issue Date: May 20,2003
Application No. 09872547
Filed: June 2,2001
Attorney Docket No. VACPAC7

:

:DECISION GRANTING PETITION
:UNDER 37 CFR 1.378(c)

:

This is a decision on the electronic petition, filed September 8,2007 ,under 37 CFR 1.378(c) to accept the unintentionally delayed payment of the 3.5 year maintenance fee for the above-identified patent.

The petition is GRANTED.

The maintenance fee is accepted, and the above-identified patent reinstated as of September 8,2007 . This decision also constitutes notice that the fee has been accepted. An electronic copy of the petition and this decision has been created as an entry in an Image File Wrapper. Nevertheless, petitioner should print and retain an independent copy

Telephone inquires related to this electronic decision should be directed to the Electronic Business Center at 1-866-217-9197.

UNITED STATES PATENT AND TRADEMARK OFFICE

COMMISSIONER FOR PATENTS
UNITED STATES PATENT AND TRADEMARK OFFICE
WASHINGTON, D.C. 20231
www.uspto.gov

Paper No. 5

MAY 0 2002

E. Eugene Thigpen, Attorney
Post Office Box 42427
Houston, TX 77242

In re Application of	)	
DICKINSON	)	
Application No. 09/872,574	)	DECISION ON PETITION
Filed: June 1, 2001	)	TO MAKE SPECIAL
For: Electrical Power Generation System	)	

This is a decision on the petition under 37 C.F.R. § 1.102, filed on October 12, 2001, to make the above-identified application special.

Petitioner requests that the above-identified application be made special under the accelerated examination procedure set forth in M.P.E.P. § 708.02, Item IV: Applicant's Age.

A grantable petition to make special under 37 C.F.R. § 1.102 and in accordance with M.P.E.P. § 708.02, Item IV, must include a showing, as by a birth certificate or the applicant's statement, that the applicant is sixty five (65) years of age or more. No fee is required for this petition.

The petition includes a copy of a birth certificate showing that applicant is sixty five (65) years of age or more.

Accordingly, the petition is GRANTED.

The application is being forwarded to the examiner for expedited prosecution.

If the examiner can make this application special without prejudice to any possible interfering applications, he/she is authorized to do so for the next action. Should the application be rejected, the application will not be considered special for the subsequent action unless the applicant promptly makes a *bona fide* effort to place the application in condition for allowance, even if it is necessary to have an interview with the examiner to accomplish this purpose.

If the examiner finds an interfering application for the same subject matter, he/she should consider such application simultaneously with this application and should state in the official letter of such application that he/she is taking it out of its turn because of possible interference.

Should an appeal be taken in this application or should this application become involved in an

interference, consideration of the appeal and the interference will be expedited by all Patent and Trademark Office officials concerned, contingent likewise upon diligent prosecution by the applicant.

After allowance, this application will be given priority for printing. See M.P.E.P. § 1309.

The petition is granted to the extent indicated.

Hien H. Phan, Special Programs Examiner
Technology Center 2800
Semiconductors, Electrical and Optical
Systems and Components

OIPE JC54
OCT 12 2001
PATENT & TRADEMARK OFFICE

#2 Petition
JHood
1/9/02

In the United States Patent and Trademark Office

Application Serial No.: 09/872,574

Attorney Docket No.: CBD-001 Group Art Unit: 2836

Filed: June 01, 2001

For: Electrical Power Generation System

RECEIVED
TECHNOLOGY CENTER 2800

Petition Pursuant to 37 CFR § 1.102(c)

Hon. Commissioner for Patents
Washington, D. C. 20231

RECEIVED
NOV 0 1 2001
TECHNOLOGY CENTER 2800
SPECIAL PROGRAM CENTER

Sir:

A Petition is hereby made for Advancement of Examination of the above referenced patent application. This Petition to make the application special is for the reason that the applicant is over 65 years of age. As stated in the attached letter, the inventor, Mr. Charles Bayne Dickinson, was born on October 8, 1929. As provided in 37 CFR § 1.102(c), no fee is required for this Petition The grant of this Petition is respectfully requested.

Respectfully submitted,

E. Eugene Thigpen

E. Eugene Thigpen
Registration No. 27, 400
P.O. Box 42427
Houston, Texas 77242-42427
Tel: (713) 278-2766
Fax: (713) 278-2044

October 9, 2001

UNITED STATES PATENT AND TRADEMARK OFFICE

UNITED STATES DEPARTMENT OF COMMERCE
United States Patent and Trademark Office
Address: COMMISSIONER FOR PATENTS
P.O. Box 1450
Alexandria, Virginia 22313-1450
www.uspto.gov

ORACLE INTERNATIONAL CORPORATION
c/o VISTA IP LAW GROUP LLP
1885 LUNDY AVENUE
SUITE 108
San Jose, CA 95131

Mail Date: 04/21/2010

Applicant	: Sowmya Subramanian	: DECISION ON REQUEST FOR
Patent Number	: 7584418	: RECALCULATION of PATENT
Issue Date	: 09/01/2009	: TERM ADJUSTMENT IN VIEW
Appliction No	: 09/872,589	: OF WYETH AND NOTICE OF INTENT TO
Filed	: 05/31/2001	: ISSUE CERTIFICATE OF CORRECTION
		:

The Request for Recalculation is **GRANTED** to the extent indicated.

The patent term adjustment has been determined to be **578** days. The USPTO will *sua sponte* issue a certificate of correction reflecting the amount of PTA days determined by the recalculation.

Prior to the issuance of the certificate of correction, the USPTO will afford patentee an opportunity to be heard and request reconsideration. Accordingly, patentee has **one month or thirty (30) days**, whichever is longer, to file a request for reconsideration of this patent term adjustment calculation. See 35 U.S.C. 154(b)(3)(B)(ii) and 37 CFR 1.322(a)(4). No extensions of time will be granted under 37 CFR 1.136.

Patentee should use document code PET.OP if electronically filing a request for reconsideration of this patent term adjustment calculation. The patentee must also include the information required by 37 CFR 1.705(b)(2) and the fee required by 37 CFR 1.18(e). If patentee does not file a timely request for reconsideration of this patent term adjustment calculation including the information required by 37 CFR 1.705(b)(2) and the fee required by 37 CFR 1.18(e), the USPTO will issue a certificate of correction reflecting the PTA determination noted above.

Patentee should be aware that in order to preserve the right to review in the United States District Court for the District of Columbia of the USPTO patent term adjustment determination, patentee must ensure that he or she also take the steps required under 35 U.S.C. 154(b)(4)(A) in a timely manner. Nothing in the request for recalculation should be construed as providing an alternative time frame for commencing a civil action under 35 U.S.C. 154(b)(4)(A).

Any questions concerning this decision should be directed to the Office of Patent Legal Administration at 571-272-7702.

UNITED STATES PATENT AND TRADEMARK OFFICE

UNITED STATES DEPARTMENT OF COMMERCE
United States Patent and Trademark Office
Address: COMMISSIONER FOR PATENTS
P.O. Box 1450
Alexandria, Virginia 22313-1450
www.uspto.gov

ORACLE INTERNATIONAL CORPORATION
c/o VISTA IP LAW GROUP LLP
1885 LUNDY AVENUE
SUITE 108
San Jose, CA 95131

Mail Date: 05/18/2010

Applicant : Sowmya Subramanian
Patent Number : 7584418
Issue Date : 09/01/2009
Application No : 09/872,589
Filed : 05/31/2001

: NOTICE CONCERNING IMPROPER
: CALCULATION OF PATENT TERM
: ADJUSTMENT BASED UPON USPTO
: IMPROPERLY MEASURING REDUCTION
: PERIOD UNDER 37 CFR 1.704(c)(10).

The United States Patent and Trademark Office (USPTO) discovered that in processing the recent recalculation decisions mailed in response to patentee's filed Request for Recalculation of Patent Term Adjustment in view of Wyeth, the USPTO improperly measured the reduction period for reductions under 37 CFR 1.704(c)(10). Pursuant to 37 CFR 1.704(c)(10), patentee's reduction begins on the date of filing the amendment under 37 CFR 1.312 ("1.312 amendment") or other related paper and ends on the date that the Office mails a response to the filing of the 1.312 amendment or other paper. It has been discovered that during the recalculation, the calculation failed to the limit the reduction to the mail date of the response to the 1.312 amendment or other paper. Accordingly, patentee's reductions were greater than warranted.

This notice **VACATES** the previous GRANTED request for recalculation and provides patentee with a revised GRANTED recalculation.

The patent term adjustment has been determined to be **619** days. The USPTO will *sua sponte* issue a certificate of correction reflecting the amount of patent term adjustment (PTA) days determined by the recalculation.

Prior to the issuance of the certificate of correction, the USPTO will afford patentee an opportunity to be heard and request reconsideration. Accordingly, patentee has **one month or thirty (30) days** from the mail date of this notice, whichever is longer, to file a request for reconsideration of this PTA calculation. See 35 U.S.C. § 154(b)(3)(B)(ii) and 37 CFR 1.322(a)(4).

Patentee should use document code PET.OP if electronically filing a request for reconsideration of this PTA calculation. The patentee must also include the information required by 37 CFR 1.705(b)(2), and the fee required by 37 CFR 1.18(e). If patentee does not file a timely request for reconsideration of this PTA calculation, including the information required by 37 CFR 1.705(b)(2) and the fee required by 37 CFR 1.18(e), the USPTO will issue a certificate of correction reflecting the PTA determination noted above.

Patentee should be aware that in order to preserve the right of review of the USPTO's PTA determination in the United States District Court for the District of Columbia, patentee must ensure that the steps required under 35 U.S.C. § 154 (b)(4) are taken in a timely manner. Nothing in the request for recalculation should be construed as providing an alternative time frame for commencing a civil action under 35 U.S.C. § 154(b)(4).

UNITED STATES PATENT AND TRADEMARK OFFICE

Commissioner for Patents
United States Patent and Trademark Office
P.O. Box 1450
Alexandria, VA 22313-1450
www.uspto.gov

KLARQUIST SPARKMAN LLP
121 S.W. SALMON STREET
SUITE 1600
PORTLAND OR 97204

COPY MAILED

NOV 23 2005

OFFICE OF PETITIONS

In re Application of
Weisman, et al.
Application No. 09/872,614
Filed: June 1, 2001
Attorney Docket No. 3382-55666
For: PEER NETWORKING HOST FRAMEWORK AND HOSTING API

: DECISION ACCORDING STATUS
: UNDER 37 CFR 1.47(a)

This decision is in response to the petition under 37 CFR 1.47(a), filed June 1, 2001.

The petition is granted.

Petitioners have shown that the non-signing inventor, Christopher M. Rude, has constructively refused to join in the filing of the above-identified application after having been presented with the application papers. Specifically, the declaration/statement of facts of Attorney Stephen A. Wight establishes that the inventor was twice mailed the application papers, including the specification, claims and drawings, but failed to respond to the requests that he sign the enclosed declaration. While Exhibits B and C are missing from the petition, Attorney Wight has stated that no response was received from two mailings. This is sufficient to show Mr. Rude's constructive refusal to join in the filing of the application. Petitioners have submitted a declaration in compliance with 37 CFR 1.63 and 1.64.

This application and papers have been reviewed and found in compliance with 37 CFR 1.47(a). This application is hereby accorded Rule 1.47(a) status.

As provided in Rule 1.47(c), this Office will forward notice of this application's filing to the non-signing inventor at the address given in the petition. Notice of the filing of this application will also be published in the Official Gazette.

After this decision is mailed, the above-identified application will be forwarded Technology Center GAU 2152 for further examination.

Telephone inquiries should be directed to the undersigned at (571) 272-3230.

E. Shirene Willis

E. Shirene Willis
Senior Petitions Attorney
Office of Petitions

UNITED STATES PATENT AND TRADEMARK OFFICE

Commissioner for Patents
United States Patent and Trademark Office
P.O. Box 1450
Alexandria, VA 22313-1450
www.uspto.gov

Ivor R. Elrifi, Esq.
Mintz Levin
One Financial Center
Boston, MA 02111

COPY MAILED

DEC 2 3 2003

OFFICE OF PETITIONS

In re Application of	:	
Andersen et al.	:	DECISION DISMISSING
Application No. 09/872,623	:	PETITION
Filed: June 2, 2001	:	
Attorney Docket No. 010.00121	:	

This is a decision on the petition filed January 8, 2002, and resubmitted on October 24, 2003, which is being treated as a petition under 37 CFR 1.10(d), requesting that the above-identified application be accorded a filing date of June 1, 2001.

Applicants allege that the application was deposited in Express Mail service on June 1, 2001. However, the petition is not accompanied by a true copy of the Express Mail mailing label showing the "date-in" or any other official notation by the United States Postal Service (USPS) relied upon to show the date of deposit as required by 37 CFR 1.10.

Paragraph (a) of 37 CFR 1.10 states that:

Any correspondence received by the Patent and Trademark Office (Office) that was delivered by the "Express Mail Post Office to Addressee" service of the United States Postal Service (USPS) will be considered filed in the Office on the date of deposit with the USPS. The date of deposit with the USPS is shown by the "date-in" on the "Express Mail" mailing label or other official USPS notation. If the USPS deposit date cannot be determined, the correspondence will be accorded the Office receipt date as the filing date. See §1.6(a).

Paragraph (d) of 37 CFR 1.10 states that:

Any person filing correspondence under this section that was received by the Office and delivered by the "Express Mail Post Office to Addressee" service of the USPS, who can show that the "date-in" on the "Express Mail" mailing label or other official notation entered by the USPS was incorrectly entered or omitted by the USPS, may petition the Commissioner to accord the correspondence a filing date as of the date the correspondence is shown to have been deposited with the USPS, provided that:

(1) The petition is filed promptly after the person becomes aware that the Office has accorded, or will accord, a filing date based upon an incorrect entry by the USPS;

(2) The number of the "Express Mail" mailing label was placed on the paper(s) or fee(s) that constitute the correspondence prior to the original mailing by "Express Mail"; and

(3) The petition includes a showing, which establishes, to the satisfaction of the Commissioner that the requested filing date was the date the correspondence was deposited in "Express Mail Post Office to Addressee" service prior to the last scheduled pickup for that day. Any showing pursuant to this paragraph must be corroborated by evidence from the USPS or that came into being after deposit and within one business day of the deposit of the correspondence in the "Express Mail Post Office to Addressee" service of the USPS.

A grantable petition under 37 CFR 1.10(d) must include "a showing which establishes, to the satisfaction of the Commissioner, that the requested filing date was the date the correspondence was deposited in 'Express Mail Post Office to Addressee' service prior to the last scheduled pickup for that day." In addition, the showing "**must be corroborated by evidence from the USPS or that came into being after deposit and within one business day of the deposit of the correspondence** in the 'Express Mail Post Office to Addressee' service of the USPS."

In support of the petition, applicants submitted a copy of their New Application Filing Checklist, containing an entry for a package bearing Express Mail label number as EJ900843346US (the same Express Mail label number found on the original application papers). The entry also identified the date as June 1, 2001, and the responsible attorney as Susan J. Braman. However, the

entry does not identify the place and time of deposit of the package in Express Mail service and the last scheduled pick-up for that date. Moreover, it is unclear whether the entry in the log came into being after deposit and within one business day of the deposit of the correspondence in the "Express Mail Post Office to Addressee" service of the USPS.

Applicant must set forth the place and time of deposit of the package in Express Mail service and the last scheduled pick-up for that date. Moreover, applicant must submit an affidavit that the entry came into being after deposit and within one business day of the deposit of the correspondence in the "Express Mail Post Office to Addressee" service of the USPS.

Accordingly, the petition is dismissed.

Any request for reconsideration of this decision should be filed within TWO (2) MONTHS of the mailing date of the decision to be considered timely. See 37 CFR 1.181(f). This time period may not be extended under 37 CFR 1.136.

Further correspondence with respect to this matter should be addressed as follows:

By mail: Commissioner for Patents
Mail Stop Petitions
PO Box 1450
Alexandria, VA 22313-1450

By FAX: (703) 872-9306
Attn: Office of Petitions

By hand: 2011 South Clark Place
Customer Window
Crystal Plaza Two, Lobby, Room 1B03
Arlington, VA

The $130.00 petition fee is unnecessary and will be refunded by treasury check.

The application is being forwarded to Technology Center 1600.

Telephone inquires related to this decision may be directed to the undersigned at (703) 306-5589.

Christina Tartera Donnell

Christina Tartera Donnell
Senior Petitions Attorney
Office of Petitions
Office of the Deputy Commissioner
for Patent Examination Policy

UNITED STATES PATENT AND TRADEMARK OFFICE

Commissioner for Patents
United States Patent and Trademark Office
P.O. Box 1450
Alexandria, VA 22313-1450
www.uspto.gov

Date: 03/23/09

Patent No. : 6818741 B2
Ser. No. : 09/872,623
Inventor(s) : ANDERSEN, THOMAS T.
Issued : 10/17/08
Title : **ALPHA-FETOPROTEIN PEPTIDES AND USES THEREOF**
Docket No. : **010.00121**

Re: Request for Certificate of Correction

Consideration has been given your request for the issuance of a certificate of correction for the above-identified patent under the provisions of Rule(s) 1.322 and/or 1.323.

Assignees' names and addresses (assignment data) printed in a patent, are based *solely* on information supplied in the appropriate space for identifying the assignment data, i.e., item 3 of the Issue Fee Transmittal Form PTOL-85B. Granting of a request under 37 CFR 3.81(b) is required to correct applicant's error providing ***incorrect or erroneous*** assignment data, *before* issuance of a Certificate of Correction, under 37 CFR 1.323 *(see Manual of Patent Examining Procedures (M.P.E.P) Chp.1400, sect. 1481).* This procedure is required *at any time after the issue fee is paid*, including after issuance of the patent.

In view of the foregoing, your request, in this mater, is hereby denied.

A request to correct the Assignee under 37 CFR 3.81(b) should include:

A. **the processing fee set forth in 37 CFR 1.117(h) (currently $130);**
B. a statement that the failure to include the correct assignee name on the PTOL-85B was inadvertent; and
C. a copy of the Notice of Recordation of Assignment Document, reflecting the reel and frame number where the assignment(s) is recorded and/or reflecting proof of *the date* the assignment was submitted for recordation.

In the Request, Applicant(s) may request that the file be forwarded to Certificates of Correction Branch, for issuance of a Certificate of Correction, if the Request is granted.

Any request under 37 CFR 3.81(b) should be directed to the following address or facsimile number:

By mail: Mail Stop PETITIONS
Commissioner for Patents
Post Office Box 1450
Alexandria, VA 22313-1450

By hand: Customer Service Window
Mail Stop Petitions
Randolph Building
401 Dulany Street
Alexandria, VA 22314

By fax: (571) 273-0025
ATTN: Office of Petitions

If a fee (currently $100) was previously submitted for consideration of a Request for Certificate of Correction, under CFR 1.323, to correct assignment data, no additional fee is required.

Lamonte M. Newsome

Lamonte M. Newsome
For Mary Diggs, Supervisor
Decisions & Certificates
Of Correction Branch
(703) 305-8309 or (703) 308-9390 #112

Ivor R. Elrifi, Esq.
Mintz Levin
One Finacial Center
Boston MA 02111

LMN

UNITED STATES PATENT AND TRADEMARK OFFICE

Commissioner for Patents
United States Patent and Trademark Office
P.O. Box 1450
Alexandria, VA 22313-1450
www.uspto.gov

Paper No.

Philip H. Albert
TOWNSEND AND TOWNSEND AND CREW, LLP
Two Embarcadero Center
Eighth Floor
San Francisco, CA 94111-3834

MAILED

JAN 27 2006

TECHNOLOGY CENTER 2100

In re Application of:
Athey
Application No. 09/872,635
Filed: May 31, 2001
For: CENTRALIZED FEED MANAGER

DECISION ON REQUEST TO WITHDRAW AS ATTORNEY OR AGENT

This is a decision on the Request To Withdraw from Representation Under 37 CFR 1.36 and 10.40(c) filed August 22, 2005.

A Power of Attorney Under 37 CFR 1.36 was filed on September 8, 2005. The Power Of Attorney revoked all prior Powers Of Attorney and appointed GREENBERG TRAURIG, LLP as the attorneys of record of the instant application. The Power Of Attorney of September 8, 2005, was accepted. Accordingly, all communications from the U.S. Patent and Trademark Office to applicant are to be conducted by GREENBERG TRAURIG, LLP.

For the above stated reasons, the request is **DISMISSED AS MOOT**.

No further communication to you regarding this application will be made.

James R. Matthews

for Brian L. Johnson
Special Program Examiner
Technology Center 2100
Computer Architecture, Software, and
Information Security
(571) 272-3595

cc: Chris W. Higgins
GREENBERG TRAURIG, LLP
Met Life Building
200 Park Avenue
New York, NY 10166

UNITED STATES PATENT AND TRADEMARK OFFICE

Commissioner for Patents
United States Patent and Trademark Office
P.O. Box 1450
Alexandria, VA 22313-1450
www.uspto.gov

HICKMAN PALERMO TRUONG & BECKER, LLP
2055 GATEWAY PLACE
SUITE 550
SAN JOSE CA 95110

COPY MAILED

MAR 0 8 2006

OFFICE OF PETITIONS

In re Application of	:	
Sero et al.	:	
Application No. 09/872,646	:	ON PETITION
Filed: May 31, 2001	:	
Attorney Docket No. 50277-1716	:	

This is a decision on the "The Petition For Withdrawal of Abandonment Pursuant to 37 CFR 1.181", filed February 21, 2006.

The petition to withdraw the holding of abandonment is **GRANTED**.

This application became abandoned for failure to timely submit the issue fee, as required by the Notice of Allowance and Fees Due, which was mailed November 4, 2005 and set a 3 month statutory period for reply. Extensions of time were not available under 37 CFR 1.136 (a). Accordingly, this application became abandoned on February 5, 2006. This decision precedes the mailing of a Notice of Abandonment.

Petitioner asserts that the Notice of Allowance and Fees Due and the Notice of Allowability mailed on November 4, 2005 was never received. Petitioner contends the Patent Application Information Retrieval (PAIR) system shows that the Notice of Allowance and Notice of Allowability were returned to the Patent and Trademark Office for failure to provide a sufficient address. Petitioner acknowledges receipt of a Supplemental Notice of Allowability on February 9, 2006. A review of the record shows that the Notice of Allowance and Notice of Allowability were returned for an insufficient mailing address.

This application is being forwarded to Art Unit 2193 for re-mailing of the Notice of Allowance and Fees Due and the Notice of Allowability.

Telephone inquiries concerning this matter should be directed to the undersigned at (571) 272-3215.

Charlema R. Grant
Petitions Attorney
Office of Petitions

UNITED STATES PATENT AND TRADEMARK OFFICE

Commissioner for Patents
United States Patent and Trademark Office
P. O. Box 1450
Alexandria, VA 22313-1450
www. uspto. gov

SAWYER LAW GROUP LLP
PO BOX 51418
PALO ALTO, CA 94303

COPY MAILED

MAR 0 3 2005

OFFICE OF PETITIONS

In re Application of :
Masahiko Hatori et al :
Application No. 09/872,656 :
Filed: June 1, 2001 :
Attorney Docket No. JP920000188US1 :

ON PETITION

This is a decision on the petition under 37 CFR 1.137(b), filed February 10, 2005, to revive the above-identified application.

The petition is **GRANTED**.

The two-month period for filing an appeal brief in triplicate (accompanied by the fee required by 37 CFR 1.17(c)), runs from the date of this decision.

The above-identified application became abandoned for failure to reply in a timely manner to the final Office action mailed June 24, 2004, which set a shortened statutory period for reply of three (3) months. No extensions of time under the provisions of 37 CFR 1.136(a) were obtained. Accordingly, the above-identified application became abandoned on September 25, 2004.

The file does not indicate a change of address has been submitted, although the address given on the petition differs from the address of record. If appropriate, a change of address should be filed in accordance with MPEP 601.03. A courtesy copy of this decision is being mailed to the address given on the petition; however, the Office will mail all future correspondence solely to the address of record.

Telephone inquiries concerning this decision should be directed to Irvin Dingle at (571) 272-3210.

This matter is being forwarded to Technology Center AU 2674 for further processing.

Irvin Dingle
Petitions Examiner
Office of Petitions
Office of the Deputy Commissioner
for Patent Examination Policy

cc:

Joseph A. Sawyer Jr.
Sawyer Law Group LLP
2465 E. Bayshore Road, Suite 405
Palo Alto, CA 94303

UNITED STATES PATENT AND TRADEMARK OFFICE

Commissioner for Patents
United States Patent and Trademark Office
P.O. Box 1450
Alexandria, VA 22313-1450
www.uspto.gov

MEDTRONIC INC
710 MEDTRONIC PARK
MINNEAPOLIS MN 55432-9924

COPY MAILED

SEP 01 2006

OFFICE OF PETITIONS

In re Application of	:	
Dennis D. Elsberry	:	
Application No. 09/872,698	:	ON PETITION
Filed: June 1, 2001	:	
Attorney Docket No. P-3226.04	:	

This is a decision on the petition to withdraw the holding of abandonment under 37 CFR 1.181, filed October 14, 2003.

The petition is **GRANTED**.

This application was held abandoned for failure to timely file drawings in response to the Notice of Allowability mailed December 2, 2002. This Notice set a non-extendable period for reply of three (3) months. No drawings having been received, the application became abandoned on March 3, 2003. A Notice of Abandonment was mailed on June 19, 2003.

Petitioner contends that he did timely file drawings in reply to the Notice of Allowability. In support, petitioner has included a copy of a properly itemized, USPTO date-stamped receipt, itemizing that "Formal Drawings" were filed on February 11, 2003.

A postcard receipt which itemizes and properly identifies the items which are being filed serves as *prima facie* evidence of receipt in the Office of all items listed thereon on the date stamped thereon by the Office. See MPEP 503.

In view thereof, **THE HOLDING OF ABANDONMENT IS WITHDRAWN.**

Given the basis for granting this petition, the $1330 petition fee has been refunded to Deposit Account No. 13-2546.

The matter is being forwarded the Office of Patent Publication for processing into a patent.

Telephone inquiries regarding this decision should be directed to the undersigned at (571)272-3207.

Cliff Congo
Petitions Attorney
Office of Petitions

UNITED STATES PATENT AND TRADEMARK OFFICE

Commissioner for Patents
United States Patent and Trademark Office
P.O. Box 1450
Alexandria, VA 22313-1450
www.uspto.gov

BRINKS HOFER GILSON & LIONE
PO BOX 10395
CHICAGO IL 60610

COPY MAILED

NOV 0 8 2005

OFFICE OF PETITIONS

In re	:	
Thomas A. Soulanille	:	DECISION REGARDING
Application No. 09/872,737	:	PATENT TERM ADJUSTMENT
Filed: June 1, 2001	:	
Attorney Docket No. 9623/324	:	

This decision is in response to the "REQUEST FOR REVIEW OF PATENT TERM ADJUSTMENT", filed July 22, 2005, requesting correction of the patent term adjustment (PTA) indicated on the patent.

The request is **DISMISSED**.

On April 22, 2005, the Office mailed the Determination of Patent Term Adjustment under 35 U.S.C. 154(b) in the above-identified application. The Notice stated that the patent term adjustment (PTA) to date is two hundred thirty-two (232) days. Applicants submitted the instant "REQUEST FOR REVIEW OF PATENT TERM ADJUSTMENT" on July 22, 2005. Applicant states that he believes there was an error in his favor in the patent term adjustment calculation.

The Office determined a patent term adjustment of two hundred thirty-two (232) days based on an adjustment for PTO delay of two hundred fifty-two (252) days pursuant to 35 U.S.C. 154(b)(1)(A)(i) and 37 C.F.R. § 1.703(a)(1), and forty-eight (48) days pursuant to 35 U.S.C. 154(b)(1)(A)(ii) and 37 C.F.R. § 1.703(a)(2), reduced by four (4), one (1), and sixty-three (63) days of applicant delay pursuant to 35 U.S.C. 154(b)(2)(C)(ii) and 37 C.F.R. § 1.704(b).

A review of the application does not reveal any errors in the calculation of the patent term adjustment. Accordingly, the correct patent term adjustment of two hundred thirty-two (232) days appears to be correct. To the extent that applicant is aware of any specific error in the PTA calculation, applicant should so advise the Office.

The application file is being forwarded to the Office of Patent Publication for issuance into a patent.

Telephone inquiries specific to this letter should be directed to Cliff Congo, Petitions Attorney, at (571)272-3207.

Karin Ferriter
Senior Legal Advisor
Office of Patent Legal Administration
Office of Deputy Commissioner
for Patent Examination Policy

OIPE JC48
SEP 2 5 2001
PATENT & TRADEMARK OFFICE

EXPRESS MAIL NO. EL755733455US
PATENT

IN THE UNITED STATES PATENT AND TRADEMARK OFFICE

Applicants	:	John T. Mulligan and John C. Tabone
Application No.	:	09/872,761
Filed	:	June 01, 2001
For	:	METHODS FOR IMPROVING THE SEQUENCE FIDELITY OF SYNTHETIC DOUBLE-STRANDED OLIGONUCLEOTIDES
	Art Unit	: 1623
	Docket No.	: 340078.401
	Date	: September 25, 2001

Box Missing Parts
Commissioner for Patents
Washington, DC 20231

RESPONSE TO NOTICE TO FILE MISSING PARTS OF APPLICATION

Commissioner:

In response to the Notice to File Missing Parts dated August 8, 2001, please find enclosed the following documents:

X Fee
X Oath/Declaration
X Copy of Notice to File Missing Parts
X Sequence Listing
X Other Election & Power of Attorney
Copy of Assignment
Small Entity Statement
Information Disclosure Statement
Form PTO-1449
Cited References (11)

Respectfully submitted,
Seed Intellectual Property Law Group PLLC

Richard G. Sharkey, Ph.D.
Registration No. 32,629

00500
PATENT TRADEMARK OFFICE

MillicentS/214552

09-27-01

Sector 1 Box Seq.

OIPE JC48 SEP 25 2001 PATENT & TRADEMARK OFFICE

EXPRESS MAIL NO. EL755733455US

PTO/SB/21 (08-00)

Please type a plus sign (+) inside this box → [+]

Approved for use through 10/31/2002. OMB 0651-0031

U.S. Patent and Trademark Office: U.S. DEPARTMENT OF COMMERCE

Under the Paperwork Reduction Act of 1995, no persons are required to respond to a collection of information unless it displays a valid OMB control number.

TRANSMITTAL FORM

(To be used for all correspondence after initial filing)

Application Number	**09/872,761**
Filing Date	**June 01, 2001**
First Named Inventor	**John T. Mulligan**
Group Art Unit	**1623**
Examiner Name	**(Unassigned)**
Attorney Docket No.	**340078.401**

ENCLOSURES (*check all that apply*)

- [X] Fee Transmittal Form
  - [X] Fee Attached
- [ ] Amendment/Response
  - [ ] After Final
  - [ ] Affidavits/declaration(s)
- [ ] Extension of Time Request
- [ ] Express Abandonment Request
- [X] Information Disclosure Statement; Form PTO-1449
- [X] Cited References (11)
- [ ] Certified Copy of Priority Document(s)
- [X] Response to Missing Parts under 37 C.F.R. 1.52 or 1.53
- [ ] Response to Missing Parts/Incomplete Application
- [X] Copy of Assignment (*for an Application*)
- [ ] Drawing(s)
- [ ] Request for Corrected Filing Receipt
- [ ] Licensing-related Papers
- [ ] Petition
- [ ] Petition to Convert to a Provisional Application
- [X] Election & Power of Attorney
- [X] Declaration
- [ ] Statement under 37 CFR 3.73(b)
- [ ] Terminal Disclaimer
- [X] Small Entity Statement
- [ ] Request for Refund
- [ ] CD(s), Number of CD(s) _____
- [ ] After Allowance Communication to Group
- [ ] Appeal Communication to Board of Appeals and Interferences
- [ ] Appeal Communication to Group (*Appeal Notice, Brief, Reply Brief*)
- [ ] Proprietary Information
- [ ] Status Letter
- [X] Return Receipt Postcard
- [X] Additional Enclosure(s) (*please identify below*):
  - Disk
  - Declaration re Sequence List.
  - Paper Copy of Sequence Listing
  - Pre. Amend. Re Sequence Disc.
  - Copy of Formalities Letter

Remarks

The PTO did not receive the following listed item(s) An Assignment Recording Cover Sheet

SIGNATURE OF APPLICANT, ATTORNEY, OR AGENT

Individual Name	**Richard G. Sharkey, Ph.D.** **Registration No. 32,629**	00500 PATENT TRADEMARK OFFICE
Signature	Richard G. Sharkey	
Date	September 25, 2001	

VIA EXPRESS MAIL NO. EL755733455US

MillicentS/214548

The PTO did not receive the following listed item(s) _____

OIPE JC48
SEP 2 5 2001
PATENT & TRADEMARK OFFICE

EXPRESS MAIL NO. EL755733455US

PTO/SB/17 (11-00)
Approved for use through 10/31/2002. OMB 0651-0032

FEE TRANSMITTAL for FY 2001

Patent fees are subject to annual revision.

TOTAL AMOUNT OF PAYMENT	($)	627

Complete if Known	
Application Number	09/872,761
Filing Date	June 01, 2001
First Named Inventor	John T. Mulligan
Examiner Name	
Group Art Unit	1623
Attorney Docket No.	340078.401

METHOD OF PAYMENT

1. [ ] The Commissioner is hereby authorized to charge indicated fees and credit any overpayments to:

Deposit Account Number: 19-1090

Deposit Account Name: Seed Intellectual Property Law Group PLLC

[X] Charge Any Additional Fee Required Under 37 CFR 1.16 and 1.17 and credit any overpayment to Deposit Account Number above.

[X] Applicant claims small entity status. See 37 CFR 1.27

2. [X] Payment Enclosed:

[X] Check [ ] Credit card [ ] Money Order [ ] Other

FEE CALCULATION

1. BASIC FILING FEE

Large Entity Fee Code	Large Entity Fee ($)	Small Entity Fee Code	Small Entity Fee ($)	Fee Description	Fee Paid
101	710	201	355	Utility filing fee	355
106	320	206	160	Design filing fee	
107	490	207	245	Plant filing fee	
108	710	208	355	Reissue filing fee	
114	150	214	75	Provisional filing fee	
				SUBTOTAL (1)	($) 355

2. EXTRA CLAIM FEES

			Extra Claims		Fee from below		Fee Paid
Total Claims	28	-** =	8	X	9	=	72
Independent Claims	1	-** =	0	X	40	=	0
Multiple Dependent				X		=	135

Large Entity Fee Code	Large Entity Fee ($)	Small Entity Fee Code	Small Entity Fee ($)	Fee Description
103	18	203	9	Claims in excess of 20
102	80	202	40	Independent claims in excess of 3
104	270	204	135	Multiple dependent claim, if not paid
109	80	209	40	** *Reissue independent claims over original patent*
110	18	210	9	** *Reissue claims in excess of 20 and over original patent*
				SUBTOTAL (2) ($) 207

**or number previously paid, if greater; For Reissues, see above

FEE CALCULATION (continued)

3. ADDITIONAL FEES

Large Entity Fee Code	Large Entity Fee ($)	Small Fee Code	Small Fee ($)	Fee Description	Fee Paid
105	130	205	65	Surcharge - late filing fee or oath	65
127	50	227	25	Surcharge - late provisional filing fee or cover sheet.	
139	130	139	130	Non-English specification	
147	2,520	147	2,520	For filing a request for *ex parte* reexamination	
112	920*	112	920*	Requesting publication of SIR prior to Examiner action	
113	1,840*	113	1,840*	Requesting publication of SIR after Examiner action	
115	110	215	55	Extension for reply within first month	
116	390	216	195	Extension for reply within second month	
117	890	217	445	Extension for reply within third month	
118	1,390	218	695	Extension for reply within fourth month	
128	1,890	228	945	Extension for reply within fifth month	
119	310	219	155	Notice of Appeal	
120	310	220	155	Filing a brief in support of an appeal	
121	270	221	135	Request for oral hearing	
138	1,510	138	1,510	Petition to institute a public use proceeding	
140	110	240	55	Petition to revive – unavoidable	
141	1,240	241	620	Petition to revive – unintentional	
142	1,240	242	620	Utility issue fee (or reissue)	
143	440	243	220	Design issue fee	
144	600	244	300	Plant issue fee	
122	130	122	130	Petitions to the Commissioner	
123	130	123	130	Petitions related to provisional applications	
126	180	126	180	Submission of Information Disclosure Stmt	
581	40	581	40	Recording each patent assignment per property (times number of properties)	
146	710	246	355	Filing a submission after final rejection (37 CFR § 1.129(a))	
149	710	249	355	For each additional invention to be examined (37 CFR § 1.129(b))	
179	710	279	355	Request for Continued Examination (RCE)	
169	900	169	900	Request for expedited examination of a design application	
Other fee (specify) ____					

*Reduced by Basic Filing Fee Paid

SUBTOTAL (3) ($) 65

SUBMITTED BY

Name (Print/Type)	Richard G. Sharkey, Ph.D.	Registration No. Attorney/Agent)	32,629
Firm Name/ Address			
Signature	Richard G. Sharkey	Date	9/25/01

00500
PATENT TRADEMARK OFFICE

MillicentS/214550

#3

OIPE JC48
SEP 2 5 2001
PATENT & TRADEMARK OFFICE

UNITED STATES PATENT AND TRADEMARK OFFICE

COMMISSIONER FOR PATENTS
UNITED STATES PATENT AND TRADEMARK OFFICE
WASHINGTON, D.C. 20231
www.uspto.gov

APPLICATION NUMBER	FILING/RECEIPT DATE	FIRST NAMED APPLICANT	ATTORNEY DOCKET NUMBER
09/872,761	06/01/2001	John T. Mulligan	340078.401

CONFIRMATION NO. 9920

FORMALITIES LETTER

OC000000006399507

00500
SEED INTELLECTUAL PROPERTY LAW GROUP PLLC
701 FIFTH AVE
SUITE 6300
SEATTLE, WA 98104-7092

Date Mailed: 08/08/2001

NOTICE TO FILE MISSING PARTS OF NONPROVISIONAL APPLICATION

06/01/2001 TGEBAHEL 00000040 09872761

01 FC:201 355.00 OP
02 FC:203 72.00 OP
03 FC:204 135.00 OP
04 FC:205 65.00 OP

FILED UNDER 37 CFR 1.53(b)

Filing Date Granted

An application number and filing date have been accorded to this application. The item(s) indicated below, however, are missing. Applicant is given **TWO MONTHS** from the date of this Notice within which to file all required items and pay any fees required below to avoid abandonment. Extensions of time may be obtained by filing a petition accompanied by the extension fee under the provisions of 37 CFR 1.136(a).

- The statutory basic filing fee is missing.
  Applicant must submit $ **710** *to complete the basic filing fee and/or file a small entity statement claiming such status (37 CFR 1.27).*
- Total additional claim fee(s) for this application is $414.
  - **$144** for **8** total claims over 20.
  - **$270** for multiple dependent claim surcharge.
- The oath or declaration is missing.
  A properly signed oath or declaration in compliance with 37 CFR 1.63, identifying the application by the above Application Number and Filing Date, is required.
- To avoid abandonment, a late filing fee or oath or declaration surcharge as set forth in 37 CFR 1.16(e) of $130 for a non-small entity, must be submitted with the missing items identified in this letter.
- **The balance due by applicant is $ 1254.**

- This application clearly fails to comply with the requirements of 37 C.F.R. 1.821-1.825. Applicant's attention is directed to the final rulemaking notice published at 55 FR 18230 (May 1, 1990), and 1114 OG 29 (May 15, 1990). If the effective filing date is on or after July 1, 1998, see the final rulemaking notice published at 63 FR 29620 (June 1, 1998) and 1211 OG 82 (June 23, 1998). If the effective filing date is on or after September 8, 2000, see the final rulemaking notice published in the Federal Register at 65 FR 54604 (September 8, 2000) and 1238 OG 145 (September 19, 2000). Applicant must provide an initial computer readable form (CRF) copy of the "Sequence Listing", an initial paper or compact disc copy of the "Sequence Listing", as well as an amendment directing its entry into the application. Applicant must also provide a statement that the content of the sequence listing information recorded in computer readable form is identical to the written (on paper or compact disc) sequence listing and, where applicable, includes no new matter, as required by 37 CFR 1.821(e), 1.821(f), 1.821(g), 1.825(b), or 1.825(d). If applicant desires the sequence listing in the instant application to be identical with that of another application on file in the U.S. Patent and Trademark Office, such request in accordance with 37 CFR 1.821(e) may be

submitted in lieu of a new CRF.

For questions regarding compliance to these requirements, please contact:

- **For Rules Interpretation, call (703) 308-4216**
- **To Purchase PatentIn Software, call (703) 306-2600**
- **For PatentIn Software Program Help, call (703) 306-4119 or e-mail at patin21help@uspto.gov or patin3help@uspto.gov**

A copy of this notice MUST be returned with the reply.

Customer Service Center
Initial Patent Examination Division (703) 308-1202

PART 2 - COPY TO BE RETURNED WITH RESPONSE

UNITED STATES PATENT AND TRADEMARK OFFICE

Commissioner for Patents
United States Patent and Trademark Office
P.O. Box 1450
Alexandria, VA 22313-1450
www.uspto.gov

Lipsitz & McAllister, LLC
755 MAIN STREET
MONROE, CT 06468

In re Application of

Liu, et al.

Application No. 09/872,783

Filed: June 1, 2001

Attorney Docket No. GIC-616

COPY MAILED

DEC 2 2 2005

OFFICE OF PETITIONS

DECISION ON PETITION

This is a decision on the petition under 37 CFR 1.137(b), filed November 14, 2005, to revive the above-identified application.

The petition is **GRANTED**.

The above-cited application became abandoned for failure to reply in a timely manner to the non-final Office action mailed April 7, 2005, which set a shortened statutory period for reply of three (3) months from its mailing date. No extension of time pursuant to 37 CFR 1.136(a) was obtained within the allowable period. Accordingly, the application became abandoned on July 8, 2005.

The amendment filed November 14, 2005, is noted and made of record.

It is not apparent whether the person signing the statement of unintentional delay was in a position to have firsthand or direct knowledge of the facts and circumstances of the delay at issue. Nevertheless, such statement is being treated as having been made as the result of a reasonable inquiry into the facts and circumstances of such delay. See 37 CFR 10.18(b) and Changes to Patent Practice and Procedure; Final Rule Notice, 62 Fed. Reg. 53131, 53178 (October 10, 1997), 1203 Off. Gaz. Pat. Office 63, 103 (October 21, 1997). In the event that such an inquiry has not been made, petitioner must make such an inquiry. If such inquiry results in the discovery that it is not correct that the entire delay in filing the required reply from the due date for the reply until the filing of a grantable petition pursuant to 37 CFR 1.137(b) was unintentional, petitioner must notify the Office.

There is no indication that the person signing the instant petition was ever given a power of attorney or authorization of agent to prosecute the above-identified application. If the person signing the instant petition desires to receive future correspondence regarding this application, the appropriate power of attorney or authorization of agent must be submitted. While a courtesy copy of this decision is being mailed to the person signing the instant petition, all future correspondence will be directed to the address of currently of record until such time as appropriate instructions are received to the contrary.

The request for an extension of time within the third month filed November 14, 2005, is noted, but is neither necessary nor proper as it was made outside the maximum statutory period for reply. Deposit account 50-2117 will be refunded $1020.00, accordingly.

The application is being forwarded to Technology Center 2600, GAU 2613 for further processing.

Telephone inquiries concerning this decision should be directed to the undersigned at (571) 272-3222.

Kenya A. McLaughlin
Petitions Attorney
Office of Petitions

cc:
Lawrence T. Cullen
Motorola Connected Home Solutions
101 Tournament Drive
Horsham, PA 19044

UNITED STATES PATENT AND TRADEMARK OFFICE

Commissioner for Patents
United States Patent and Trademark Office
P.O. Box 1450
Alexandria, VA 22313-1450
www.uspto.gov

John L. Rogitz
ROGITZ AND ASSOCIATES
Suite 3120
750 B Street
San Diego, CA 92101

COPY MAILED

MAY 03 2006

OFFICE OF PETITIONS

In re Application of
MORGAN *et al*
Application No.: 09/872,797
Filing Date: June 1, 2001
Docket No.: ARC920000133US1
For: INTERNET AUTHENTICATION WITH MULTIPLE INDEPENDENT CERTIFICATE AUTHORITIES

DECISION

ON PETITION UNDER

37 CFR 1.137(b)

This is a decision on the petition to revive under 37 CFR 1.137(b) filed on January 04, 2006. The petition under 1.137(b) is hereby **GRANTED**.

The above-identified application became abandoned for failure to file a timely reply to an Office Action mailed April 14, 2005. The Office Action set a three (3) month period for reply, with extensions of time obtainable under 37 CFR 1.136(a). However, in no event may a reply be timely filed after six (6) months from the mail date.

Petitioners have met the requirements for revival under 37 CFR 1.137(b). Petitioners submitted a response to the Office Action in the form of formal drawings, paid the $1,500.00 petition fee and made the required statement of unintentional delay. No terminal disclaimer is required. Accordingly, all requirements of 37 CFR 1.137(b) have been satisfied.

This application is being forwarded to Art Unit 2132 for continued processing.

James Thomson

James Thomson
Attorney Advisor
Office of PCT Legal Administration

Tel: 571-272-3302

UNITED STATES PATENT AND TRADEMARK OFFICE

COMMISSIONER FOR PATENTS
UNITED STATES PATENT AND TRADEMARK OFFICE
P.O. BOX 1450
ALEXANDRIA, VA 22313-1450
www.uspto.gov

Paper No. 7

CHARLES E GRAVES ASSOCIATES PC
6818 OASIS PASS
SUITE 100
AUSTIN TX 78732

COPY MAILED
FEB 19 2004
OFFICE OF PETITIONS

In re Application of
Ammicht, et al.
Application No. 09/872,810
Filed: June 4, 2001
Attorney Docket No. 5-3-15

ON PETITION

This is a decision on the alternative petition to withdraw the holding of abandonment, petition to revive under 37 CFR 1.137(a), and petition to revive under 37 CFR 1.137(b), filed January 21, 2004.

The petition under 37 CFR 1.137(a) is **DISMISSED**.

The petition under 37 CFR 1.181 is **DISMISSED**.

The petition under 37 CFR 1.137(b) is **DISMISSED**.

Any request for reconsideration of this decision must be submitted within **TWO (2) MONTHS** from the mail date of this decision. The reconsideration request should include a cover letter entitled "Renewed Petition under 37 CFR 1.137(a)" or "Renewed Petition under 37 CFR 1.137(b)". Extensions of time under 37 CFR 1.136(a) are permitted. No fee is required for a renewed petition.

The above-identified application became abandoned for failure to timely file a reply in response to the Notice to File Missing Parts of Nonprovisional Application mailed July 31, 2001. This Notice set a shortened statutory period for reply of two months for applicants to submit an oath or declaration, as well as

substitute drawings. No extensions of time under 37 CFR 1.136(a) were obtained. No reply having been received, the above identified application became abandoned by matter of law on October 1, 2001. Applicants filed a status inquiry on July 30, 2003. In response, a courtesy Notice of Abandonment was mailed on November 24, 2003.

Petition to Withdraw the Holding of Abandonment:

Petitioner asserts that he filed a reply that included an oath and declaration for each inventor. The PTO file is the official record of papers filed in this application. A review of the official file reveals that no oath or declaration was filed in response to the Notice to File Missing Parts, since no such oath or declaration is present in the file. An applicant alleging that a paper was filed in the PTO and later misplaced has the burden of proving the allegation by a preponderance of the evidence.

Petitioner has offered no proof of the timely submission of the oath or declaration. Petitioner has not submitted a USPTO date stamped postcard receipt itemizing an oath or declaration, or a transmittal letter with a timely certificate of mailing or facsimile transmittal under 37 CFR 1.8 or express mail under 37 CFR 1.10.

Moreover, even if petitioner **had** offered proof of the timely submission of the oath or declaration, petitioner has not accounted for the timely submission of the substitute drawings. In fact, petitioner admits that no substitute drawings were filed in response to the Notice to File Missing Parts, stating that he "erroneously concluded that the formal drawings in the instant case were already submitted." The Notice to File Missing Parts indicated that substitute drawings must be timely submitted to avoid abandonment.

In view of the above, the holding of abandonment can not be withdrawn.

As no fee is required for the filing of a petition to withdraw the holding of abandonment, no fee has been charged.

Petition to Revive Under 37 CFR 1.137(a) (Unavoidable Delay):

A grantable petition under 37 CFR 1.137(a) must be accompanied by: (1) the reply required to the outstanding Office action or notice, unless previously filed; (2) the petition fee set forth in 37 CFR 1.17(l); and (3) a showing to the satisfaction of the Commissioner that the **entire delay in filing the required reply from the due date for the reply until the filing of a grantable petition** pursuant to this paragraph was unavoidable. The instant petition lacks items (3) and (1).

Decisions on reviving abandoned applications on the basis of "unavoidable" delay have adopted the reasonably prudent person standard in determining if the delay was unavoidable: "The word 'unavoidable' ... is applicable to ordinary human affairs, and requires no more or greater care or diligence than is generally used and observed by prudent and careful men in relation to their

most important business."[1]

Moreover, delay resulting from the lack of knowledge or improper application of the patent statutes, rules of practice or the Manual of Patent Examining Procedure, however, does not constitute "unavoidable" delay.[2]

Petitioner has not sought to show that the entire delay in filing the required reply (an oath or declaration **and** drawings) from the due date for the reply (September 30, 2001) until the filing of a grantable petition was unavoidable. Rather, petitioner argues that the delay in responding to the July 31, 2001 Notice to File Missing Parts was made unavoidable by the lack of response the PTO to applicants' status inquiry of July 30, 2003. This does not constitute unavoidable delay within the meaning of 37 CFR 1.137(a). Petitioner should have known that the failure to file substitute drawings in response to the Notice to File Missing Parts would have caused the application to become abandoned.

As 37 CFR 1.137(a) requires a fee for the filing, and not merely the grant of a petition, the petition fee of $110 has been charged to petitioner's credit card, as authorized.

Petition to Revive Under 37 CFR 1.137(b) (Unintentional Delay):

A grantable petition under 37 CFR 1.137(b) must be accompanied by: (1) the required reply, unless previously filed; (2) the petition fee as set forth in 37 CFR 1.17(m); (3) a statement that the entire delay in filing the required reply from the due date for the reply until the filing of a grantable petition pursuant to 37 CFR 1.137(b) was unintentional; and (4) any terminal disclaimer (and fee as set forth in 37 CFR 1.20(d)) required by 37 CFR 1.137(d). The instant petition lacks items (3) and (1).

With regards to item (3), petitioner has not submitted the required statement.

With regards to item (1), the file does not reveal the presence of an oath or declaration. On petition, petitioner has not submitted a copy of an oath or declaration. On request for reconsideration, an oath or declaration must be submitted.

As 37 CFR 1.137(b) requires a fee for the filing, and not merely the grant of a petition, the petition fee of $1,330 has been charged to petitioner's credit card, as authorized.

No fee is required for a request for reconsideration filed pursuant to 37 CFR 1.137(a) or 37 CFR 1.137(b).

---

[1] In re Mattulath, 38 App. D.C. 497, 514-15 (1912)(*quoting* Ex parte Pratt, 1887 Dec. Comm'r Pat. 31, 32-33 (1887)); see also Winkler v. Ladd, 221 F. Supp. 550, 552, 138 U.S.P.Q. 666, 167-68 (D.D.C. 1963), aff'd, 143 U.S.P.Q. 172 (D.C. Cir. 1963); Ex parte Henrich, 1913 Dec. Comm'r Pat. 139, 141 (1913).

[2] See Haines, 673 F. Supp. at 317, 5 U.S.P.Q. 2d at 1132; Vincent v. Mossinghoff, 230 U.S.P.Q. 621, 624 (D.D.C. 1985); Smith v. Diamond, 209 U.S.P.Q. 1091 (D.D.C. 1981); Potter v. Dann, 201 U.S.P.Q. 574 (D.D.C. 1978); Ex parte Murray, 1891 Dec. Comm'r Pat. 130, 131 (1891).

Further correspondence with respect to this matter should be addressed as follows:

By mail: Mail Stop Petitions
Commissioner for Patents
P.O. Box 1450
Alexandria VA 22313-1450

By FAX: (703) 872-9306
Attn: Office of Petitions

Telephone inquiries related to this decision should be directed to the undersigned at (703) 305-0272.

Cliff Congo

Cliff Congo
Petitions Attorney
Office of Petitions

UNITED STATES PATENT AND TRADEMARK OFFICE

COMMISSIONER FOR PATENTS
UNITED STATES PATENT AND TRADEMARK OFFICE
P.O. BOX 1450
ALEXANDRIA, VA 22313-1450
www.uspto.gov

Paper No. 10

CHARLES E GRAVES ASSOCIATES PC
6818 OASIS PASS
SUITE 100
AUSTIN TX 78732

COPY MAILED
MAR 08 2004
OFFICE OF PETITIONS

In re Application of :
Ammicht, et al. :
Application No. 09/872,810 : ON PETITION
Filed: June 4, 2001 :
Attorney Docket No. 5-3-15 :

This is a decision on the Renewed Petition Under 37 CFR 1.137(a) or Under 37 CFR 1.137(b), filed March 1, 2004.

The petition under 37 CFR 1.137(a) is **DISMISSED**.

The petition under 37 CFR 1.137(b) is **DISMISSED**.

Any request for reconsideration of this decision must be submitted within **TWO (2) MONTHS** from the mail date of this decision. The reconsideration request should include a cover letter entitled "Renewed Petition under 37 CFR 1.137(a)" or "Renewed Petition under 37 CFR 1.137(b)". Extensions of time under 37 CFR 1.136(a) are permitted. No fee is required for a renewed petition.

The above-identified application was held abandoned for failure to timely file a declaration **and** substitute drawings in response to the Notice to File Missing Parts of Nonprovisional Application mailed on July 31, 2001. This Notice set a shortened statutory period for reply of two (2) months for applicants to submit

an oath or declaration, together with substitute drawings. No extensions of time under 37 CFR 1.136(a) were obtained. No reply having been received, the above-identified application became abandoned by matter of law on October 1, 2001. Applicants filed a status inquiry on July 30, 2003. In response, a courtesy Notice of Abandonment was mailed on November 24, 2003. Applicants filed an alternative petition to withdraw the holding of abandonment under 37 CFR 1.181, petition to revive under 37 CFR 1.137(a), and petition to revive under 37 CFR 1.137(b) on January 21, 2004.[1] However, the petitions were dismissed on all three counts in a decision mailed on February 19, 2004.

Petition to Revive Under 37 CFR 1.137(a) (Unavoidable Delay):

A grantable petition under 37 CFR 1.137(a) must be accompanied by: (1) the reply required to the outstanding Office action or notice, unless previously filed; (2) the petition fee set forth in 37 CFR 1.17(l); and (3) a showing to the satisfaction of the Commissioner that the entire delay in filing the required reply from the due date for the reply until the filing of a grantable petition pursuant to this paragraph was unavoidable. The instant petition lacks items (3) and (1).

Decisions on reviving abandoned applications on the basis of "unavoidable" delay have adopted the reasonably prudent person standard in determining if the delay was unavoidable: "The word 'unavoidable' ... is applicable to ordinary human affairs, and requires no more or greater care or diligence than is generally used and observed by prudent and careful men in relation to their most important business."[2]

Moreover, delay resulting from the lack of knowledge or improper application of the patent statutes, rules of practice or the Manual of Patent Examining Procedure, however, does not constitute "unavoidable" delay.[3]

On renewed petition, petitioner asserts that he filed a declaration in response to the Notice to File Missing Parts. In support thereof, petitioner has included an itemized, date stamped postcard receipt. A postcard receipt which itemizes and properly identifies the items which are being filed serves as *prima facie* evidence of receipt in the Office of all items listed thereon on the date stamped thereon by the Office. See MPEP 503.

---

[1] Included with the filing of the petitions was substitute drawings.

[2] In re Mattulath, 38 App. D.C. 497, 514-15 (1912)(*quoting* Ex parte Pratt, 1887 Dec. Comm'r Pat. 31, 32-33 (1887)); see also Winkler v. Ladd, 221 F. Supp. 550, 552, 138 U.S.P.Q. 666, 167-68 (D.D.C. 1963), aff'd, 143 U.S.P.Q. 172 (D.C. Cir. 1963); Ex parte Henrich, 1913 Dec. Comm'r Pat. 139, 141 (1913).

[3] See Haines, 673 F. Supp. at 317, 5 U.S.P.Q. 2d at 1132; Vincent v. Mossinghoff, 230 U.S.P.Q. 621, 624 (D.D.C. 1985); Smith v. Diamond, 209 U.S.P.Q. 1091 (D.D.C. 1981); Potter v. Dann, 201 U.S.P.Q. 574 (D.D.C. 1978); Ex parte Murray, 1891 Dec. Comm'r Pat. 130, 131 (1891).

Accordingly, petitioner **has** established that he timely filed a declaration. However, petitioner has not accounted for the timely submission of the substitute drawings. In fact, in his original petition filed January 21, 2004, petitioner admitted that no substitute drawings were filed in response to the Notice to File Missing Parts, stating that he "erroneously concluded that the formal drawings in the instant case were already submitted." The Notice to File Missing Parts indicated that substitute drawings must be timely submitted to avoid abandonment.

In view of the above, petitioner has not shown to the satisfaction of the Commissioner that the entire period of delay in filing substitute drawings was unavoidable.

Petition to Revive Under 37 CFR 1.137(b) (Unintentional Delay):

A grantable petition under 37 CFR 1.137(b) must be accompanied by: (1) the required reply, unless previously filed; (2) the petition fee as set forth in 37 CFR 1.17(m); (3) a statement that the entire delay in filing the required reply from the due date for the reply until the filing of a grantable petition pursuant to 37 CFR 1.137(b) was unintentional; and (4) any terminal disclaimer (and fee as set forth in 37 CFR 1.20(d)) required by 37 CFR 1.137(d). The instant petition lacks item (1).

With regards to item (1), petitioner has established that he did timely file a declaration. As such, it was likely misplaced by the Office. In view thereof, petitioner still needs to submit a copy of the declaration.

Further correspondence with respect to this matter should be addressed as follows:

By mail: Mail Stop Petitions
Commissioner for Patents
P.O. Box 1450
Alexandria VA 22313-1450

By FAX: (703) 872-9306
Attn: Office of Petitions

Telephone inquiries related to this decision should be directed to the undersigned at (703) 305-0272.

Cliff Congo
Petitions Attorney
Office of Petitions

UNITED STATES PATENT AND TRADEMARK OFFICE

COMMISSIONER FOR PATENTS
UNITED STATES PATENT AND TRADEMARK OFFICE
P.O. BOX 1450
ALEXANDRIA, VA 22313-1450
www.uspto.gov

Paper No. 13

CHARLES E GRAVES ASSOCIATES PC
6818 OASIS PASS
SUITE 100
AUSTIN TX 78732

COPY MAILED
APR 19 2004
OFFICE OF PETITIONS

In re Application of	:	
Ammicht, et al.	:	
Application No. 09/872,810	:	ON PETITION
Filed: June 4, 2001	:	
Attorney Docket No. 5-3-15	:	

This is a decision on the paper filed April 12, 2004, which is being treated as a renewed petition under 37 CFR 1.137(b).

The renewed petition under 37 CFR 1.137(b) is **GRANTED**.

The above-identified application was held abandoned for failure to timely file a declaration **and** substitute drawings in response to the Notice to File Missing Parts of Nonprovisional Application mailed on July 31, 2001. This Notice set a shortened statutory period for reply of two (2) months for applicants to submit an oath or declaration, together with substitute drawings. No extensions of time under 37 CFR 1.136(a) were obtained. No reply having been received, the above-identified application became abandoned by matter of law on October 1, 2001. Applicants filed a status inquiry on July 30, 2003. In response, a courtesy Notice of Abandonment was mailed on November 24, 2003.

Applicants filed an alternative petition to withdraw the holding of abandonment under 37 CFR 1.181, petition to revive under 37 CFR 1.137(a), and petition to revive under 37 CFR 1.137(b) on January 21, 2004.[1] However, the petitions were dismissed on all three counts in a decision mailed on February 19, 2004. Applicants then filed a renewed petition under 37 CFR 1.137(a)

[1] Included with the filing of the petitions was substitute drawings.

and 37 CFR 1.137(b) on March 1, 2004. However, these petitions were again dismissed in a decision mailed on March 8, 2004. With respect to the 37 CFR 1.137(a) petition, applicants did not establish that the failure to submit substitute drawings was unavoidable. With respect to the 37 CFR 1.137(b) petition, applicants did not supply the required reply - a copy of the 37 CFR 1.63 oath or declaration.

With the instant petition, petitioner supplied a copy of the 37 CFR 1.63 declaration. Petitioner previously paid the petition fee on January 21, 2004. 37 CFR 1.137(b)(3) requires a statement that the entire delay in filing the required reply from the due date for the reply until the filing of a grantable petition pursuant to 37 CFR 1.137(b) was unintentional. The statement contained in the instant petition varies from the language required by 37 CFR 1.137(b)(3). The statement contained in the instant petition is being construed as the statement required by 37 CFR 1.137(b)(3). Petitioner must notify the Office if this is **not** a correct interpretation of the statement contained in the instant petition.

With regards to petitioner's request that the fee charges for the petition to revive be "waived", petitioner is reminded that the fee accompanying a petition to revive is a **statutory** requirement, and therefore can not be waived.[2]

Lastly, petitioner is directed to the Manual of Patent Examining Procedure, which states in pertinent part:

> The Office has revised the drawing review process to implement the eighteen-month publication of patent applications. Under the revised drawing review process, the Office of Initial Patent Examination (OIPE) will perform an initial review of drawings in new utility and plant patent applications filed on or after November 29, 2000 to see if the drawings can be effectively scanned for publication purposes. Design applications are not published. Therefore, drawings filed in design patent applications (whether filed before, on or after November 29, 2000) will be reviewed but not for publication purposes. The standard of review employed by OIPE is such that most drawings, including those that have been indicated by applicant to be informal drawings, will be accepted.
>
> OIPE inspects the drawings to see if they can be effectively scanned and adequately reproduced. If the drawings are not acceptable, OIPE will object to the drawings and notify applicant that a timely submission of acceptable drawings (e.g., drawings which can be scanned) is required. This initial review process in OIPE is necessary in order to ensure that applications can be timely published. Under the OIPE review process, OIPE may object to and require corrected drawings within a set time period, if the drawings:
>
> ...

---

[2] See 35 U.S.C. 41(a)(7).

(D) do not have the appropriate margin or are not on the correct size paper. See 37 CFR 1.84(f) and (g). Each sheet must include a top margin of at least 2.5cm. (1 inch), a left size margin of at least 2.5 cm. (1 inch), a right size margin of at least 1.5 cm. (5 /8 inch), and a bottom margin of at least 1.0 cm. (3 /8 inch). The size of the sheets on which drawings are made must be either 21.0 cm. by 29.7 cm. (DIN size A4) or 21.6 cm. by 27.9 cm. (8-1 /2 by 11 inches).[3]

The application file is being forwarded to the Office of Initial Patent Examination for pre-examination processing.

Telephone inquiries related to this decision should be directed to the undersigned at (703) 305-0272.

Cliff Congo

Cliff Congo
Petitions Attorney
Office of Petitions

[3] MPEP 507.

UNITED STATES PATENT AND TRADEMARK OFFICE

Commissioner for Patents
United States Patent and Trademark Office
P.O. Box 1450
Alexandria, VA 22313-1450
www.uspto.gov

MAIL

MAY - 4 2004

DIRECTOR OFFICE
TECHNOLOGY CENTER 2100

Paper No. 8

Thomas L. Evans
BANNER & WITCOFF, LTD.
1001 G Street, N.W.
11th Floor
Washington, DC 20001-4597

In re Application of:
Coyle Brett MARL, et al.
Application No. 09/872,859
Filed: June 1, 2001
For: METHOD AND SYSTEM FOR DETERMINING INFORMATION TO ACCESS AN ELECTRONIC MAIL ACCOUNT

DECISION ON REQUEST TO WITHDRAW AS ATTORNEY OR AGENT

This is a decision on the Request to Withdraw from Representation filed April 14, 2004.

A grantable request to withdraw as attorney of record should indicate thereon the present mailing addresses of the attorney(s) who is/are withdrawing from the record and of the applicant. The request for withdrawal must be signed by every attorney seeking to withdraw or contain a clear indication that one attorney is signing on behalf of another/others. A request to withdraw will not be approved unless at least 30 (thirty) days would remain between the date of approval and the later of the expiration date of a time to file a response or the expiration date of the maximum time period which can be extended under 37 C.F.R. § 1.136(a). The effective date of withdrawal being the date of decision and not the date of request. See M.P.E.P. § 402.06. 37 C.F.R. § 1.36 further requires that the applicant or patent owner be notified of the withdrawal of the attorney or agent.

The request is **GRANTED.**

All future communications from the Office will be directed to the below-listed address until otherwise notified by applicant. This correspondence address is provided by the withdrawn attorney(s). Applicant is reminded of the obligation to promptly notify the Patent and Trademark Office (Office) of any change in correspondence address to ensure receipt of all communications from the Office.

Vincent N. Trans
Special Program Examiner
Technology Center 2100
Computer Architecture, Software, and
Information Security
703-305-9750

cc: Robert D. Becker
MANATT, PHELPS & PHILLIPS, LLP
1001 Page Mill Road
Building 2
Palo Alto, CA 94304

UNITED STATES PATENT AND TRADEMARK OFFICE

Commissioner for Patents
United States Patent and Trademark Office
P.O. Box 1450
Alexandria, VA 22313-1450
www.uspto.gov

COPY MAILED

MAY 29 2007

OFFICE OF PETITIONS

MANATT PHELPS AND PHILLIPS
ROBERT D. BECKER
1001 PAGE MILL ROAD, BUILDING 2
PALO ALTO, CA 94304

In re Application of	:	
Coyle Brett MARL, et al	:	
Application No. 09/872,859	:	DECISION ON PETITION
Filed: June 1, 2001	:	TO WITHDRAW
Attorney Docket No. 306025US91	:	FROM RECORD
	:	

This is a decision on the Request to Withdraw as attorney or agent of record under 37 C.F.R. § 1.36(b), filed March 22, 2007.

The request is **DISMISSED** as moot.

A review of the file record indicates that the power of attorney given to Manatt Phelps and Phillips has been revoked by the assignee of the patent application on May 2, 2007. Accordingly, the request to withdraw under 37 C.F.R. § 1.36(b) is moot.

The correspondence address of record has been changed and the new correspondence address is the address indicated below.

There are pending Office actions at the present time.

Telephone inquires concerning this decision should be directed to Diane Goodwyn at 571-272-6735.

April Wise
Petitions Examiner
Office of Petitions

cc: SCOTT MCKEOWN
OBLON, SPIVAK, MCCELLAND,
MAIER & NEUSTADT, P.C.
1940 DUKE STREET
ALEXANDRIA, VA 22314-3412

UNITED STATES PATENT AND TRADEMARK OFFICE

Commissioner for Patents
United States Patent and Trademark Office
P.O. Box 1450
Alexandria, VA 22313-1450
www.uspto.gov

Samuel H. Dworetsky
AT&T CORP
P.O. Box 4110
Middletown, NJ 07748-4110

COPY MAILED
MAY 2 3 2006
OFFICE OF PETITIONS

In re Application of :
DOUGLIS *et al* :
Application No.: 09/872,893 :
Filing Date: June 1, 2001 :
Docket No.: 003493.00170 (2000-0472) :
For: ELIDING WEB PAGE CONTENT :

DECISION

ON PETITION UNDER

37 CFR 1.137(b)

This is a decision on applicants' "Petition to Revive Under 37 CFR §1.137(b)" filed on February 21, 2006. The petition is **GRANTED**.

The above-identified application became abandoned for failure to file a timely reply to a non-final Office Action mailed January 30, 2004. This Notice set a three (3) month period for reply, with extensions of time obtainable under 37 CFR 1.136(a).

Petitioners have met all requirements of 37 CFR 1.137(b). Applicants submitted amendments and remarks, the requisite $1,500.00 petition fee and provided the statement required by 37 CFR 1.137(b)(3). A terminal disclaimer is not required. Accordingly, all requirements of 37 CFR 1.137(b) have been satisfied.

This application is being forwarded to Art Unit 2173 for continued processing.

James Thomson
Attorney Advisor
Office of PCT Legal Administration

Tel: 571-272-3302

UNITED STATES PATENT AND TRADEMARK OFFICE

COMMISSIONER FOR PATENTS
UNITED STATES PATENT AND TRADEMARK OFFICE
PO BOX 1450
ALEXANDRIA, VA 22313-1450
www.uspto.gov

Paper No. 6

INTELLECTUAL PROPERTY LAW DEPARTMENT CASE LLC
700 STATE STREET
RACINE WI 53404

COPY MAILED
JUN 18 2003
OFFICE OF PETITIONS

In re Application of	:	
Arshad et al.	:	
Application No. 09/872,895	:	DECISION GRANTING PETITION
Filed: June 4, 2001	:	
Attorney Docket No. 13937	:	

This is a decision on the petition under 37 CFR 1.53, filed June 12, 2003, requesting that the above-identified application be accorded a filing date of June 4, 2001, with Figure 4 described in the specification as part of the original disclosure.

On June 4, 2001, applicants filed the above-identified application. On February 25, 2003, the Office mailed a nonfinal Office action, stating that the application had been accorded a filing date of June 4, 2001, and advising applicants that Figure 4 appeared to have been omitted.

In response, on June 12, 2003, applicants filed the present petition and a copy of applicants' postcard receipt acknowledging receipt of 4 sheets of drawings (Figures 1-4) on June 4, 2001. Additionally, applicants submitted one sheet of drawings, containing Figure 4 with the present petition.

Upon review of the record, Figure 4, deposited on June 4, 2001, has not been located among the application papers. However, the evidence is convincing that the application papers deposited on June 4, 2001, included Figure 4, which was subsequently misplaced in the United States Patent and Trademark Office. Therefore, the application, including Figure 4, was complete on filing and will be granted a filing date of June 4, 2001.

Accordingly, the petition is granted.

The requirement for the submission of omitted drawing Figure 4 was sent in error and is hereby vacated. Accordingly, the petition fee is unnecessary and will not be charged to Deposit Account.

The application file is being forwarded to the Office of Initial Patent Examination for further processing with a filing date of June 4, 2001, using Figure 4 submitted with the

present petition. The Office records should indicate that 4 sheets of drawings were submitted on filing. Thereafter, the file will be forwarded to Technology Center 2800.

Any inquiries related to this decision should be directed to the undersigned at (703) 306-5589.

Christina Tartera Donnell

Christina Tartera Donnell
Senior Petitions Attorney
Office of Petitions

UNITED STATES PATENT AND TRADEMARK OFFICE

COMMISSIONER FOR PATENTS
UNITED STATES PATENT AND TRADEMARK OFFICE
WASHINGTON, D.C. 20231
www.uspto.gov

Paper No. 7

MCDONNELL BOEHNEN HULBERT & BERGHOFF
300 SOUTH WACKER DRIVE, 32ND FLOOR
CHICAGO, IL 60606

COPY MAILED

MAY 09 2002

OFFICE OF PETITIONS

In re Application of	:
John A. Nix et al	:DECISION REFUSING TO ACCORD
Application No. 09/872,904	: STATUS UNDER 37 CFR 1.47(a)
Filed: May 31, 2001	:
Attorney Docket No. MBH00-581	:

This is in response to the petition Under 37 CFR 1.47(a), filed February 4, 2002.

The petition is dismissed.

Rule 47 applicant is given TWO MONTHS from the mailing date of this decision to reply, correcting the below-noted deficiencies. Any reply should be entitled "Request for Reconsideration of Petition Under 37 CFR 1.47(a)," and should only address the deficiencies noted below, except that the reply may include an oath or declaration executed by the nonsigning inventor. **FAILURE TO RESPOND WILL RESULT IN ABANDONMENT OF THE APPLICATION.** Any extensions of time will be governed by 37 CFR 1.136(a).

A grantable petition under 37 CFR 1.47(a) requires: (1) proof that the nonsigning inventor cannot be reached or refuses to sign the oath or declaration after having been presented with the application papers (specification, claims and drawings); (2) an acceptable oath or declaration in compliance with 35 U.S.C. §§ 115 and 116; (3) the petition fee; and (4) a statement of the last known address of the nonsigning inventor. Applicant lacks items (1) and (2) set forth above.

As to item (1), declarant John A. Nix, Jr., an officer of Go2Call.com, Inc., indicates that Mr. Wiles was contacted on "at least three instances, through mailed correspondence, electronic mail, and/or telephone communications." However, no evidence has been submitted as to what was actually mailed to Mr. Wiles or as to whether the mailing ever reached the intended addressee. Was a complete copy of the application papers (specification, claims, drawings, declaration) mailed to nonsigning inventor Wiles? See MPEP 409.03(d). Before a refusal can be alleged, it must be demonstrated that a complete copy of the application papers was

presented to Mr. Wiles. Otherwise, Mr. Wiles could not attest that he has "reviewed and understands the application papers" and therefore could not sign the declaration which he was given. Unless petitioner can show that a copy of the application papers was presented to Mr. Wiles, then petitioner will have to mail a copy of the complete application papers to Mr. Wiles' last known address, return receipt requested. A cover letter of instructions should accompany the mailing of the application papers setting a deadline or a statement that no response will constitute a refusal. This sort of ultimatum lends support to a finding of refusal by conduct.

As to the statement by Mr. Nix that an electronic mail was sent to Mr. Wiles, no evidence of this transmission and the substance thereof has been submitted to support this statement. Additionally, the record fails to state the substance of the telephone communication(s) to Mr. Wiles or as to who made the telephone communication(s) to Mr. Wiles. The substance and results of the electronic mail transmission(s) and the telephone communication(s) must be stated and made by the person having firsthand knowledge thereof.

Where there is an express or oral refusal, that fact, along with the time and place of the refusal, must be stated in an affidavit or declaration by the party to whom the refusal was made. Where there is a written refusal, a copy of the document(s) evidencing that refusal must be made part of the affidavit or declaration.

When it is concluded by the rule 47 applicant that an omitted inventor's conduct constitutes a refusal, all facts upon which that conclusion is based should be stated in an affidavit or declaration. If there is documentary evidence to support facts alleged in the affidavit or declaration, such evidence must be submitted.

Whenever an omitted inventor gives a reason for refusing to sign the application oath or declaration, that reason should be stated in the affidavit or declaration.

As to item (2), the declaration and power of attorney submitted with the petition is not in compliance with 37 CFR 1.63 and 1.64. The declaration fails to set forth inventor Wiles' citizenship, residence and mailing address. Therefore, a declaration in compliance with 37 CFR 1.63 and 1.64 signed by the signing inventors on behalf of the nonsigning inventor is required. See MPEP 409.03(a); MPEP 602 and MPEP 605.01.

In order to expedite consideration of the petition under 37 CFR 1.47(a), petitioner may wish to consider submitting the renewed petition by facsimile transmission to the telephone number indicated below and to the attention of Wan Laymon.

Further correspondence with respect to this matter should be addressed as follows:

By mail: U.S. Patent and Trademark Office
Mail Stop DAC, P.O. Box 2327
Arlington, VA 22202

OR

Commissioner for Patents
Box DAC
Washington, D.C. 20231

By FAX: (703) 308-6916
Attn: Office of Petitions

By hand: Crystal Plaza Four, Suite 3C23
2201 S. Clark Place
Arlington, VA

Telephone inquiries related to this decision should be directed to Wan Laymon at (703) 306-5685.

Frances Hicks

Frances Hicks
Lead Petitions Examiner
Office of Petitions
Office of the Deputy Commissioner
for Patent Examination Policy

UNITED STATES PATENT AND TRADEMARK OFFICE

COMMISSIONER FOR PATENTS
UNITED STATES PATENT AND TRADEMARK OFFICE
WASHINGTON, D.C. 20231
www.uspto.gov

Paper No. 10

McDONNELL BOEHNEN HULBERT & BERGHOFF
300 SOUTH WACKER DRIVE, 32ND FLOOR
CHICAGO, IL 60606

COPY MAILED

JUL 2 3 2002

OFFICE OF PETITIONS

In re Application of	:
John A. Nix et al	:
Application No. 09/872,904	: DECISION GRANTING STATUS
Filed: May 31, 2001	: UNDER 37 CFR 1.47(A)
For: PACKET-SWITCHED TELEPHONY CALL	:
SERVER	:

This is a decision on the petition filed July 9, 2002, requesting reconsideration of a decision mailed May 9, 2002, which refused to accord 37 CFR 1.47(a) status to the above-identified application.

The petition is granted.

Petitioner has shown that the non-signing inventor has refused to join in the filing of the above-identified application.

The above-identified application and papers have been reviewed and found in compliance with 37 CFR 1.47(a). This application is hereby accorded Rule 1.47(a) status. As provided in Rule 1.47(c), this Office will forward notice of this application's filing to the non-signing inventor at the address given in the petition. Notice of the filing of this application will also be published in the Official Gazette.

Telephone inquiries regarding this decision should be directed to Petitions Examiner Wan Laymon at (703) 306-5685.

This application is being forwarded to the Office of Initial Patent Examination for preexamination processing.

Frances Hicks
Lead Petitions Examiner
Office of Petitions
Office of the Deputy Commissioner
for Patent Examination Policy

UNITED STATES PATENT AND TRADEMARK OFFICE

COMMISSIONER FOR PATENTS
UNITED STATES PATENT AND TRADEMARK OFFICE
WASHINGTON, D.C. 20231
www.uspto.gov

BRIAN C. WILES
2640 CAMBRIDGE ROAD #3
CAMERON PARK, CA 95682

COPY MAILED

JUL 2 3 2002

OFFICE OF PETITIONS

In re Application of
Nix; Wiles and Mumma
Application No. 09/872,904
Filed: May 31, 2001
For: PACKET-SWITCHED TELEPHONY CALL SERVER

Dear Mr. Wiles:

You are named as a joint inventor in the above identified United States patent application, filed under the provisions of 35 U.S.C. 116 (United States Code), and 37 CFR 1.47(a), Rules of Practice in Patent Cases. Should a patent be granted on the application you will be designated therein as a joint inventor.

As a named inventor you are entitled to inspect any paper in the file wrapper of the application, order copies of all or any part thereof (at a prepaid cost per 37 CFR 1.19) or make your position of record in the application. Alternatively, you may arrange to do any of the preceding through a registered patent attorney or agent presenting written authorization from you. If you care to join in the application, counsel of record (see below) would presumably assist you. Joining in the application would entail the filing of an appropriate oath or declaration by you pursuant to 37 CFR 1.63.

Telephone inquiries regarding this communication should be directed to Wan Laymon at (703) 306-5685. Requests for information regarding your application should be directed to the File Information Unit at (703) 308-2733. Information regarding how to pay for and order a copy of the application, or a specific paper in the application, should be directed to Certification Division at (703) 308-9726 or 1 (800) 972-6382 (outside the Washington D.C. area).

Frances Hicks

Frances Hicks
Lead Petitions Examiner
Office of Petitions
Office of the Deputy Commissioner
for Patent Examination Policy

cc:
McDONNELL BOEHNEN HULBERT & BERGHOFF
300 SOUTH WACKER DRIVE, 32ND FLOOR
CHICAGO, IL 60606

UNITED STATES PATENT AND TRADEMARK OFFICE

Commissioner for Patents
United States Patent and Trademark Office
P.O. Box 1450
Alexandria, VA 22313-1450
www.uspto.gov

MCDONNEL BOEHNEN HULBERT & BERGHOFF
300 S WACKER DR
32ND FLOOR
CHICAGO IL 60606-6709

COPY MAILED
DEC 14 2005
OFFICE OF PETITIONS

In re Application of	:	
Nix, et al.	:	
Application No. 09/872,904	:	
Filed: May 31, 2001	:	DECISION ON PETITION
Attorney Docket No. MBHB00-581	:	

This is a decision on the petition to revive under 37 CFR 1.137(b), pursuant to 37 CFR 1.137(f), filed November 1, 2005.

The petition is **GRANTED**.

Petitioner states that the instant application is the subject of a PCT international application filed on May 31, 2002. However, the US Patent and Trademark Office was unintentionally not notified of this filing within 45 days subsequent to the filing of the PCT application.

In view of the above, this application became abandoned pursuant to 35 USC 122(b)(2)(B)(iii) and 37 CFR 1.213(c) for failure to timely notify the Office of the filing of an application in a foreign country, or under a multilateral international agreement, that requires publication of applications 18 months after filing.

A petition under 37 CFR 1.137(f) must be accompanied by:

(1) the reply, which is met by the notification of such filing in a foreign country or under a multinational treaty;

(2) the petition fee as set forth in 37 CFR 1.17(m); and

(3) a statement that the entire delay in filing the required reply from the due date of the reply until the filing of a grantable petition was unintentional.

The instant petition has been found to be in compliance with 37 CFR 1.137(f). Accordingly, the failure to timely notify the Office of a foreign or international filing within 45 days after the date of filing of such foreign or international application as provided by 35 USC 122(b)(2)(B)(iii) and 37 CFR 1.213(c) is accepted as having been unintentionally delayed.

The previous Request and Certification under 35 USC 122(b)(2)(B)(i) has been rescinded. A Communication Regarding Rescission of Nonpublication Request and/or Notice of Foreign Filing, indicating a projected publication date of March 23, 2006, accompanies this decision.

The matter is being forwarded to Group Art Unit 2668 for examination.

Telephone inquiries regarding this decision should be directed to the undersigned at (571)272-3207.

Cliff Congo
Petitions Attorney
Office of Petitions

Enc: Communication Regarding Rescission of Nonpublication Request and/or Notice of Foreign Filing (1 page)

SPE RESPONSE FOR CERTIFICATE OF CORRECTION

Paper No.: _____

DATE : 8/16/2007

TO SPE OF : ART UNIT 3700 (3781)

SUBJECT : Request for Certificate of Correction on Patent No.: 7,188,745

Attn: Stephen Castellano

A response is requested with respect to the accompanying request for a certificate of correction.

Please complete this form and forward within 7 days to: **Scanning customer Support**

Send copy also via PTO mail to:
Certificates of Correction Branch – 2900 South Tower 9A39A
Palm location **7580** - Tel. No. 308-8309

With respect to the change(s) requested, correcting Office and/or Applicant's errors, should the patent read as shown in the certificate of correction? No new matter should be introduced, nor should the scope or meaning of the claims be changed.

Ernest C. White, LIE - 308-9390x122
Certificates of Correction Branch

Thank You For Your Assistance

The request for issuing the above-identified correction(s) is hereby:
Note your decision on the appropriate box.

- ☐ **Approved** — **All** changes apply.
- ☐ **Approved in Part** — Specify below which changes **do not** apply.
- ☑ **Denied** — State the reasons for denial below.

Comments:

1. Certificate includes 7 pages, only 4 of which are submitted on the proper form, the other 3 pages are supporting documents.
2. The four pages submitted are illegible (typewritten is suggested).
3. Items (5) and (6) pertaining to Patent Library and Gazette updates are inappropriate in certificate; 4. Items (1), (2) and (4) are not submitted in proper format, Items (1) and (2) pertaining to Fig. 12, Fig. 12 was ~~SPE Art~~ not accepted. (continued)

SPE

~~3721~~ 3781
Art Unit

SPE response for Certificate of Correction (continued)

Patent No. 7,188,745

4(continue) Items ① and ② denied.

5. Item ③, Fig. 11 adequately depicts claimed invention, Item ③ denied.

6. Item 4, the period is in column 13, line 4 not page 13, Item 4 would be appropriate if quotation marks and double dash are used to represent deletions and additions, respectively.

UNITED STATES DEPARTMENT OF COMMERCE
COMMISSIONER FOR PATENTS
P. O. BOX 1450
ALEXANDRIA, VA 22313-1450

Date : 5/7/2008
Patent No. : 7,188,745 09/872914
Inventor(s) : Schermel
Issue Date : March 7, 2007
Title : **TILTABLE MODULAR RECYCLE CONTAINER SYSTEM**

Re: Certificate of Correction

Consideration has been given your request for a certificate of correction, for the above-identified patent under the provisions of Rule 1.322 and 1.323.

Respecting the alleged error(s) in your request, attached is the PTOL-306 form (SPE Response), explaining in full detail the status of your request along with suggestions and requirements and reason for denial(s).

Further consideration will be given concerning this matter upon receipt of a request for **Reconsideration** (reconsideration should be accompanied by supporting document(s) such as, amendment, postcard receipt, 1449/892, etc.) and should be filed and directed to Decisions & Certificates of Correction Branch, along with the appropriate fee of $100.00..

Ernest C. White, *LIE* (703) 308-9390 x122
Mary F. Diggs, *Supervisor* (703) 308-9390 x125
Decisions & Certificates of Correction Branch

Ferdinand Schermel
7741 Churchville Rd.
Brampton ON L6Y OH3 CA CANADA

ecw

UNITED STATES PATENT AND TRADEMARK OFFICE

COMMISSIONER FOR PATENTS
UNITED STATES PATENT AND TRADEMARK OFFICE
P.O. BOX 1450
ALEXANDRIA, VA 22313-1450
www.uspto.gov

NOVO NORDISK PHARMACEUTICALS, INC
100 COLLEGE ROAD WEST
PRINCETON, NJ 08540

COPY MAILED

OCT 13 2004

OFFICE OF PETITIONS

In re Application of :
Thomas Dyrberg, et al. :
Application No. 09/872,923 : ON PETITION
Filed: June 1, 2001 :
Attorney Docket No. 4401.224-US :

This is a decision on the petition under 37 CFR 1.137(b), filed August 23, 2004, to revive the above-identified application.

The petition is **DISMISSED**.

Any request for reconsideration of this decision must be submitted within TWO (2) MONTHS from the mail date of this decision. Extensions of time under 37 CFR 1.136(a) are permitted. The reconsideration request should include a cover letter entitled "Renewed Petition under 37 CFR 1.137(b)." This is **not** final agency action within the meaning of 5 U.S.C. § 704.

A grantable petition under 37 CFR 1.137(b)[1] must be accompanied by: (1) the required reply,[2] unless previously filed; (2) the petition fee as set forth in 37 CFR 1.17(m); (3) a statement that the entire delay in filing the required reply from the due date for the reply until the filing of a grantable petition pursuant to 37 CFR 1.137(b) was unintentional; and (4) any terminal disclaimer (and fee as set forth in 37 CFR 1.20(d)) required by 37 CFR 1.137(c). Where there is a question as to whether either the abandonment or the delay in filing a petition under 37 CFR 1.137 was unintentional, the Commissioner may require additional information. See MPEP 711.03(c)(III)(C) and (D). The instant petition lacks item 1. Petitioner has failed to submit an appropriate response to the non-final office action mailed October 20, 2003.

---

[1] As amended effective December 1, 1997. See Changes to Patent Practice and Procedure; Final Rule Notice, 62 Fed. Reg. 53131, 53194-95 (October 10, 1997), 1203 Off. Gaz. Pat. Office 63, 119-20 (October 21, 1997).

[2] In a nonprovisional application abandoned for failure to prosecute, the required reply may be met by the filing of a continuing application. In an application or patent, abandoned or lapsed for failure to pay the issue fee or any portion thereof, the required reply must be the payment of the issue fee or any outstanding balance thereof.

Further correspondence with respect to this matter should be addressed as follows:

By mail: Mail Stop PETITION
Commissioner for Patents
Post Office Box 1450
Alexandria, VA 22313-1450

By hand: U.S. Patent and Trademark Office
220 20th Street S.
Customer Window, Mail Stop PETITION
Crystal Plaza Two, Lobby, Room 1B03
Arlington, VA 22202

The centralized facsimile number is **(703) 872-9306**.

Any questions concerning this matter may be directed to the undersigned at (571) 272-3204.

Sherry D. Brinkley

Sherry D. Brinkley
Petitions Examiner
Office of Petitions
Office of the Deputy Commissioner
for Patent Examination Policy

UNITED STATES PATENT AND TRADEMARK OFFICE

COMMISSIONER FOR PATENTS
UNITED STATES PATENT AND TRADEMARK OFFICE
P.O. BOX 1450
ALEXANDRIA, VA 22313-1450
www.uspto.gov

Paper No. 7

COPY MAILED

NOV 0 5 2003

OFFICE OF PETITIONS

BLAKELY SOKOLOFF TAYLOR & ZAFMAN
12400 WILSHIRE BOULEVARD, SEVENTH FLOOR
LOS ANGELES, CA 90025

In re Application of
Ravi Chandra, et al.
Application No. 09/872,937
Filed: June 2, 2001
Attorney Docket No. 4906.P022

DECISION GRANTING PETITION
UNDER 37 CFR 1.137(b)

This is a decision on the petition, filed October 21, 2003, which is being treated as a petition under 37 CFR 1.137(b) to revive the instant nonprovisional application for failure to timely notify the U.S. Patent and Trademark (USPTO) of the filing of an application in a foreign country, or under a multinational treaty that requires publication of applications eighteen months after filing. *See* 37 CFR 1.137(f).

The petition is **GRANTED**.

Petitioner states that the instant nonprovisional application is the subject of an application filed in an eighteen month publication country on May 14, 2002. However, the USPTO was unintentionally not notified of this filing within 45 days subsequent to the filing of the subject application in an eighteen month publication country.

In view of the above, this application became abandoned pursuant to 35 U.S.C. § 122(b)(2)(B)(iii) and 37 CFR 1.213(c) for failure to timely notify the Office of the filing of an application in a foreign country or under a multilateral international agreement that requires publication of applications 18 months after filing.

A petition to revive an application abandoned pursuant to 35 U.S.C. 122(b)(2)(B)(iii) for failure to notify the USPTO of a foreign filing must be accompanied by:

(1) the required reply which is met by the notification of such filing in a foreign country or under a multinational treaty;
(2) the petition fee as set forth in 37 CFR 1.17(m); and
(3) a statement that the entire delay in filing the required reply from the due date of the reply until the filing of a grantable petition was unintentional.

The instant petition has been found to be in compliance with 37 CFR 1.137(b). Accordingly, the failure to timely notify the USPTO of a foreign or international filing within 45 days after the date of filing of such foreign or international application as provided by 35 U.S.C. § 122(b)(2)(B)(iii) and 37 CFR 1.213(c) is accepted as having been unintentionally delayed.

The previous Request and Certification under 35 U.S.C. § 122(b)(2)(B)(i) has been rescinded. A Notice Regarding Rescission of Nonpublication Request which sets forth the projected publication date of February 12, 2004 accompanies this decision on petition.

Any inquiries concerning this decision may be directed to Sherry D. Brinkley at (703) 305-9220.

This application is being forwarded to Technology Center Art Unit 2100 for examination in due course.

Sherry D. Brinkley
Petitions Examiner
Office of Petitions
Office of the Deputy Commissioner
for Patent Examination Policy

ATTACHMENT: Notice Regarding Rescission of Nonpublication Request

UNITED STATES PATENT AND TRADEMARK OFFICE

Commissioner for Patents
United States Patent and Trademark Office
P.O. Box 1450
Alexandria, VA 22313-1450
www.uspto.gov

9/26/07 #19

BRINKS HOFER GILSON & LIONE
P.O. BOX 10395
CHICAGO, ILLINOIS 60610

In re Application of:
Data, Paul Joseph, et al.
Serial No. 09/872,976
Filed: May 31, 2001
Docket: 659/829
Title: FULL WRAPPING DISPOSABLE REFASTENABLE AND ADJUSTABLE PANT

DECISION ON PETITION UNDER 37 CFR § 1.181

This is a decision on the petition filed on November 21, 2003 under 37 CFR § 1.181. Petitioner requests that certain comments and objections made by the examiner in the Advisory Action filed September 23, 2003 be withdrawn, stricken or otherwise corrected.

The petition is granted-in-part.

Background

The petition filed under 37 CFR § 1.181 requests a review of the examiner's challenges and objections to three different aspects of the application including, the claim of priority to the '951 application, amendments to Figure 2, and the identification of trademarks in the specification.

The first issue raised in the petition involves the claim of priority to the '951 application. In the original application filed May 31, 2001, the petitioner failed to identify the relationship between the present application and the '951 application. This issue was raised in the Office action mailed March 27, 2002. The petitioner then filed a Preliminary Amendment and Request for Corrected Filling Receipt on January 24, 2002, indicating that the present application was a continuation of the '951 application. Subsequently, in the Office action mailed July 1, 2003 the examiner noted "the disclosure of the invention in the parent application ('951) does not appear to be the same as the disclosure of the invention in the instant application." In the Advisory Action mailed September 23, 2003, the examiner stated "the applicants could change the claim of priority to one in which this application is a CIP of the '951 application or applicant could point out where there is support in the '951 application." The petitioner claims to be entitled to the benefit of priority to the '951 application based on the incorporation by reference of the '951 application into the present application.

The second issue presented in the petition concerns amendments to Figure 2. In the office Action mailed March 27, 2002, the examiner objected to element 5 in Figure 1B and Figure 2, finding them to be inconsistent. The petitioner then amended element 5 in Figure 2, changing its designation from element 5 to element 51 (designation 51 not having been used in any other figure). In the response dated September 20, 2002, the petitioner claimed that element 5 was distinct from element 51, whereby element 51 requires only the outer member of the pant to create the fastening panel (as describe on page 4, line 2), and element 5 requires a second patch of material to create the fastening panel. The examiner continued to object to Figure 2 in the Advisory Action dated September 23, 2003, arguing that that "Figure 2 would be much clearer if on page 4, line 2, after panel - see 51 in Figure 2 - could be inserted." The petitioner maintains that the examiner's comment has no legal or factual basis and requests that it be withdrawn from the record.

The final issue raised in the petition concerns the examiner's objections to the manner in which trademarks are identified in the application. In the Office action mailed March 27, 2002, the examiner noted that trademarks "should be capitalized wherever they appear and be accompanied by the generic terminology." In the response dated September 20, 2002, the petitioner amended the trademarks identification by using capitalization in conjunction with the proper trademark symbol. The examiner object to this representation in both the office Action file July 01, 2003 and the Advisory Action filed September 23, 2003, claiming that the use of capitalization *and* "®" together was improper. The petitioner maintains that such representation is appropriate and requests that the examiner's comments be withdrawn from the record.

Discussion and Decision

A review of the record indicates that the Preliminary Amendment filed on January 24, 2002 properly clarified the relationship between the present application and the '951 application as a continuation. Once the relationship was identified, the examiner objected to the classification of the present application as a continuation of the '951 application in the Office Action mailed July 1, 2003 and the Advisory Action mailed September 23, 2003. The examiner stated that the '951 application did not appear to be the same as the disclosure in the present application as "the '951 application did not appear to include the length of the side panel as claimed."

The background section of the '951 application, (line 13, page 1) states, "The present invention provides a new and useful stretchable composite that may have application in these as well as other areas. For example, this composite may also be suited for installation in disposable diapers, pants and adult incontinence articles as waistbands, stretch side panels, closure tapes, frontal tapes, back panels, leg bands, and the like." These garments described in the '951 application inherently have length. Therefore, the examiner's objection to the claim of priority is hereby withdrawn.

The second issue raised by the petitioner concerns the examiner's objection to Figure 2. In the Advisory Action mailed September 23, 2003, the examiner stated that "the invention shown in Figure 2 would be clearer if on page 4, line 2, after "panel" – see 51 in Figure 2 – could be inserted." The petitioner claims that the inclusion of such language is unnecessary based on the

description of element 51 of Figure 2 on page 4, line 2, which provides, "alternatively, an outer member may serve as the fastening panel." However, there is no indication from the language on page 4, line 2 that this description is a representation of element 51 in Figure 2, nor is there any other indication in the specification that element 51 actually represents the absence of a secondary patch of material to create a fastening panel. Essentially, there is no indication that page 4 line 2 describes element 51 in Figure 2. Therefore, the examiner's suggestion is reasonable and would in fact serve to clarify the specification.

The final issue, regarding proper identification of trademarks, is addressed in the M.P.E.P. With respect to trademarks, the M.P.E.P 608.01(v) states:

> Trademarks should be identified by capitalizing each letter of the mark (in the case of word or lettermarks) or otherwise indicating the description of the mark (in the case of marks in the form of a symbol or device or other nontextual form). Every effort should be made to prevent their use in any manner which might adversely affect their validity as trademarks. Capitalize each letter of the word in the bracket or include a proper trademark symbol, such as ™ or © following the word

This language indicates that trademarks may be identified by capitalization or the use of the proper trademark symbol. However, the M.P.E.P does not require that trademarks be identified only in the alternative. Instead, the M.P.E.P specifically states that every effort should be made to prevent the use of trademarks in any manner which might adversely affect their validity as marks. In light of this language, the use of capitalization or the use of the proper trademark symbol merely represents the minimum requirement for trademark identification and the petitioner's use of capitalization and the trademark symbol to identify trademarks is proper. Therefore, the examiner's objection to the trademark identification is hereby withdrawn.

Summary

The petitioners' request with respect to the examiner's objections to the claim of priority and to the trademark identification is granted and these objections are to be considered withdrawn. The petitioners' request for withdraw of the examiner's objections to Figure 2 is dismissed.

PETITION GRANTED-IN-PART.

Any inquiry regarding this decision should be directed to Allan N. Shoap, Special Programs Examiner, at (571) 272-4514.

Karen M Young

for Frederick R. Schmidt, Director
Technology Center 3700

UNITED STATES PATENT AND TRADEMARK OFFICE

Commissioner for Patents
United States Patent and Trademark Office
P. O. Box 1450
Alexandria, VA 22313-1450
www.uspto.gov

Paper No. 8

Blakely, Sokoloff, Taylor & Zafman LLP
12400 Wilshire Boulevard
Seventh Floor
Los Angeles, CA 90025-1030

COPY MAILED

JUL 3 0 2003

OFFICE OF PETITIONS

In re Application of :
Peter F. King :
Application No. 09/872,997 :
Filed: May 31, 2001 :
Attorney Docket No. 3399P052 :

DECISION DISMISSING PETITION
UNDER 37 CFR 1.137(b)

This is a decision on the petition, filed May 15, 2003, which is being treated as a petition under 37 CFR 1.137(b) to revive the instant nonprovisional application for failure to timely notify the U.S. Patent and Trademark Office (USPTO) of the filing of an application in a foreign country, or under a multinational treaty that requires publication of applications eighteen months after filing. *See* 37 CFR 1.137(f).

The petition is dismissed as **MOOT**.

Petitioner states that the instant nonprovisional application became the subject of a counterpart application filed in an eighteen-month country on May 27, 2002. A review of the file record discloses that a Notice to Rescind was received in the USPTO on April 22, 2002.

Where an applicant makes a nonpublication request under 35 U.S.C. 122(b)(2)(B)(i) and then rescinds (pursuant to 35 U.S.C. § 122(b)(2)(B)(ii)) the nonpublication request **before or on the date a counterpart application is filed in an eighteen-month publication country**, the nonpublication request will be treated as annulled and the application will be treated as if the nonpublication request had never been made. *See* Clarification of the United States Patent and Trademark Office's Interpretation of the Provisions of 35 U.S.C. 122(b)(2))(B)(ii)-(iv), 1272 OG 1 (July 1, 2003), available at http://www.uspto.gov/web/patents/ patog/week26/.

In the instant application, a notice to rescind was filed prior to the filing date of a counterpart application in an eighteen-month publication country. Therefore, since receipt in the USPTO of the request to rescind prior to the filing date of a counterpart application in an eighteen-month

publication country resulted in the annulling of the nonpublication request, this application is not regarded as abandoned. As such, the filing of a petition to revive is unnecessary and is dismissed as involving a moot issue.

Since this application is not in fact abandoned, for the reason stated above, the petition fee of $ is being credited to Deposit Account No. 02-2666 as authorized.

This application is being forwarded to Technology Center 2100 for examination in due course.

Any inquiries concerning this decision may be directed to the undersigned at (703) 306-3475.

Marianne E. Morgan

Marianne E. Morgan
Petitions Examiner
Office of Petitions
Office of the Deputy Commissioner
for Patent Examination Policy

UNITED STATES PATENT AND TRADEMARK OFFICE

COMMISSIONER FOR PATENTS
UNITED STATES PATENT AND TRADEMARK OFFICE
WASHINGTON, D.C. 20231
www.uspto.gov

Paper No. 8

Michael A. Davis, Jr.
Haynes and Boone, L.L.P.
600 Congress Avenue
Suite 1600
Austin, TX 78701

MAIL

OCT 2 3 2002

DIRECTOR OFFICE
TECHNOLOGY CENTER 2100

In re Application of: Mitchell T. Berg	)	
Application No. 09/873,018	)	
Filed: June 1, 2001	)	
For: METHOD AND SYSTEM FOR COMMUNICATING AN INFORMATION PACKET THROUGH MULTIPLE NETWORKS	)	**DECISION ON REQUEST FOR WITHDRAWAL AS ATTORNEY**

This is a decision on the Request To Withdraw from Representation filed October 7, 2002 and the Supplemental Request filed October 21, 2002.

A grantable request to withdraw as attorney of record should indicate thereon the present mailing addresses of the attorney(s) who is/are withdrawing from the record and of the applicant. The request for withdrawal must be signed by every attorney seeking to withdraw or contain a clear indication that one attorney is signing on behalf of another/others. A request to withdraw will not be approved unless at least 30 (thirty) days would remain between the date of approval and the later of the expiration date of a time to file a response or the expiration date of the maximum time period which can be extended under 37 C.F.R. § 1. 136(a). The effective date of withdrawal being the date of decision and not the date of request. See M.P.E.P. § 402.06. 37 C.F.R. § 1.36 further requires that the applicant or patent owner be notified of the withdrawal of the attorney or agent.

The request is **GRANTED**.

All future communications from the Office will be directed to the below-listed address until otherwise notified by applicant. This correspondence address is provided by the withdrawn attorney(s). Applicant is reminded of the obligation to promptly notify the Patent and Trademark Office (Office) of any change in correspondence address to ensure receipt of all communications from the Office.

For Vincent N. Trans
Special Programs Examiner
Technology Center 2100
Computer Architecture and Software
(703) 305-9750

cc: SEED Intellectual Property Law Group PLLC
701 Fifth Avenue
Suite 6300
Seattle, Washington 98105

UNITED STATES PATENT AND TRADEMARK OFFICE

COMMISSIONER FOR PATENTS
UNITED STATES PATENT AND TRADEMARK OFFICE
WASHINGTON, D.C. 20231
www.uspto.gov

Paper No. 8

MAILED

OCT 3 0 2002

Technology Center 2100

Haynes and Boone, L.L.P.
600 Congress Avenue, Suite 1600
Austin, TX 78701

In re Application of: Mitchell T. Berg	)	
Application No. 09/873,019	)	
Filed: June 1, 2001	)	**DECISION ON REQUEST FOR**
For: METHOD AND SYSTEM FOR	)	**WITHDRAWAL AS ATTORNEY**
INITIATING EXECUTION OF	)	
SOFTWARE IN RESPONSE TO A	)	
STATE	)	

This is a decision on the Request To Withdraw from Representation filed October 7, 2002 and the Supplemental Request To Withdraw filed October 21, 2002.

A grantable request to withdraw as attorney of record should indicate thereon the present mailing addresses of the attorney(s) who is/are withdrawing from the record and of the applicant. The request for withdrawal must be signed by every attorney seeking to withdraw or contain a clear indication that one attorney is signing on behalf of another/others. A request to withdraw will not be approved unless at least 30 (thirty) days would remain between the date of approval and the later of the expiration date of a time to file a response or the expiration date of the maximum time period which can be extended under 37 C.F.R. § 1. 136(a). The effective date of withdrawal being the date of decision and not the date of request. See M.P.E.P. § 402.06. 37 C.F.R. § 1.36 further requires that the applicant or patent owner be notified of the withdrawal of the attorney or agent.

The request is **GRANTED**.

All future communications from the Office will be directed to the below-listed address until otherwise notified by applicant. This correspondence address is provided by the withdrawn attorney(s). Applicant is reminded of the obligation to promptly notify the Patent and Trademark Office (Office) of any change in correspondence address to ensure receipt of all communications from the Office.

For Vincent N. Trans
Special Programs Examiner
Technology Center 2100
Computer Architecture and Software
(703) 305-9750

cc: SEED Intellectual Property Law Group PLLC
701 Fifth Avenue
Suite 6300
Seattle, WA 98105

UNITED STATES PATENT AND TRADEMARK OFFICE

COMMISSIONER FOR PATENTS
UNITED STATES PATENT AND TRADEMARK OFFICE
P.O. BOX 1450
ALEXANDRIA, VA 22313-1450
www.uspto.gov

Novozymes North America, Inc.
500 Fifth Avenue
Suite 1600
New York, NY 10110

COPY MAILED

SEP 2 0 2005

OFFICE OF PETITIONS

In re Application of	:	
Allan Svendsen, et al.	:	
Application No. 09/873,075	:	ON PETITION
Filed: June 1, 2001	:	
Attorney Docket No. 10038.200-US	:	

This is a decision on the petition under 37 CFR 1.137(b), filed July 25, 2005, to revive the above-identified application.

The petition is **GRANTED**.

The application became abandoned for failure to timely submit the issue and publication fees.

The petition satisfies the requirements of 37 CFR 1.137(b) in that petitioner has supplied (1) the reply in the form of the issue fee and publication fee; (2) the petition fee of $1500; and (3) an adequate statement of unintentional delay.

Telephone inquiries concerning this decision should be directed to the undersigned at (571) 272-3223.

The application file is being referred to the Publishing Division to be processed into a patent.

Marianne E. Jenkins
Petitions Examiner
Office of Petitions

UNITED STATES PATENT AND TRADEMARK OFFICE

Commissioner for Patents
United States Patent and Trademark Office
Washington, D.C. 20231
www.uspto.gov

Paper No. 4

TED WHITLOCH
REGISTERED PATENT ATTORNEY, P.A.
5323 SW 38TH AVE.
FT.LAUDERDALE, FL 33312

COPY MAILED

NOV 26 2001

OFFICE OF PETITIONS

In re Application of	:	
Mains	:	
Application No. 09/873,104	:	DECISION GRANTING
Filed: June 1, 2001	:	PETITION
Attorney Docket No. MAI-3	:	

This is a decision on the petition filed September 27, 2001, to establish that Figures 3 and 4 were part of the originally filed application.

On June 1, 2001, the application was filed.

On August 3, 2001, the Office of Initial Patent Examination mailed a "Notice of Omitted Item(s)" stating that the application had been accorded a filing date of June 1, 2001, and advising applicants that Figures 3 and 4 described in the specification appeared to have been omitted.

In response, the present petition was filed alleging that Figures 3 and 4 were deposited on June 1, 2001. In support, petitioner has submitted a postcard receipt which acknowledges receipt of "4 Sheets of Drawing" on June 1, 2001.[1] Petitioner has also submitted a copy of the missing documentation- Figures 3 and 4.

Upon review of the record, Figures 3 and 4, deposited on June 1, 2001, have not been located. However, the evidence is convincing that the application papers deposited on June 1, 2001, included Figures 3 and 4, and that Figures 3 and 4 were subsequently misplaced in the PTO.

In view of the above, the petition is **granted**. The copy of Figures 3 and 4 submitted with the petition will be used for examination purposes.

The petition fee will be scheduled to be refunded to petitioner.

---

[1] Evidence of receipt of any correspondence filed in the Patent and Trademark Office can be obtained by submitting a self addressed post card properly itemizing and identifying the paper or papers being filed. Upon receipt of the correspondence, the Patent and Trademark Office will check the listing on the post card against the papers submitted, making sure that all items listed are present and will then stamp the postcard with an Official date stamp and place the post card in the outgoing mail. "A post card receipt which itemizes and properly identifies the papers which are being filed serves as *prima facie* evidence of receipt in the PTO of all items listed thereon by the PTO." M.P.E.P. § 503.

The Notice mailed August 3, 2001 was sent in error and is hereby vacated.

The Application is being returned to the Office of Initial Patent Examination for further processing with a filing date of **June 1, 2001** (computer records, at the present time, incorrectly show a date of September 27, 2001), using the application papers filed on June 1, 2001, and the copy of Figures 3 and 4 filed on September 27, 2001.

Telephone inquiries should be directed to Petitions Attorney Steven Brantley at (703) 306-5683.

Beverly M. Flanagan
Supervisory Petitions Examiner
Office of Petitions
Office of the Deputy Commissioner
for Patent Examination Policy

UNITED STATES PATENT AND TRADEMARK OFFICE

Commissioner for Patents
United States Patent and Trademark Office
P.O. Box 1450
Alexandria, VA22313-1450
www.uspto.gov

MAYER & WILLIAMS PC
251 NORTH AVENUE WEST
2ND FLOOR
WESTFIELD NJ 07090

COPY MAILED

JUN 13 2007

OFFICE OF PETITIONS

In re Application of
Robert L. Howald et al.
Application No. 09/873,160
Filed: June 1, 2001
Attorney Docket Number: D2370

ON PETITION

This is a decision on the petition filed October 3, 2006, to withdraw the holding of abandonment under 37 CFR 1.181, in accordance with the reasoning of the decision in Delgar Inc. v. Schuyler, 172 USPQ 513.

The petition under 37 CFR 1.181 is **DISMISSED**.

The file record discloses that the Office Action mailed March 10, 2005 was mailed to what was believed to be the address of record. However, petitioner contends that it was not received as it was mailed to an incorrect address and thus returned by the United States Postal Services (USPS). Petitioner further argues that despite the filing of a Notice of Customer Number Record Change on September 24, 2001, prior to the mailing of the Office Action on March 10, 2005, the Office Action was mailed to an incorrect address. In support of their contention of non-receipt, petitioner shows evidence of the Notice of Customer Number Record Change filed September 24, 2001.

Petitioners are advised that while a Notice of Customer Number Record Change was filed September 24, 2001 changing the address for customer number 27774, the instant application was never associated with that or any other customer number on filing June 1, 2001. The address of record provided on the oath or declaration did not include a customer number and therefore, the Notice of Customer Number Record Change on September 24, 2001 was properly mailed. Petitioners are correct that customer number 27774 was provided on the application transmittal however, bibliographic data is taken from either the oath or declaration or Application Data Sheet (ADS), not the application transmittal. Thus the failure to respond to the office action based on a claim of non-receipt is not due to USPTO error but instead appears to be due to the applicants not properly associating the instant application with a customer number, specifically customer number 27774.

In the absence of petitioner showing that they acted responsibly with respect to

providing the USPTO with a proper address, the showing of record is therefore insufficient to warrant withdrawal of the holding of abandonment.

ALTERNATIVE VENUES

Petitioner may wish to consider filing a renewed petition under 37 CFR 1.137(a)[1] or 37 CFR 1.137(b),[2] which now provides that where the delay in reply was unintentional, a petition may be filed to revive an abandoned application or a lapsed patent pursuant to 37 CFR 1.137(b).

The filing of a petition under the unintentional standard cannot be intentionally delayed and therefore should be filed promptly. A person seeking revival due to unintentional delay cannot make a statement that the delay was unintentional unless the entire delay, including the delay from the date it was discovered that the application was abandoned until the filing of the petition to revive under 37 CFR 1.137(b), was

---

[1]A grantable petition under 37 CFR 1.137(a) must be accompanied by:

(1) the required reply, unless previously filed; In a nonprovisional application abandoned for failure to prosecute, the required reply may be met by the filing of a continuing application. In a nonprovisional utility or plant application filed on or after June 8, 1995, and abandoned for failure to prosecute, the required reply may also be met by the filing of a request for continued examination in compliance with § 1.114. In an application or patent, abandoned or lapsed for failure to pay the issue fee or any portion thereof, the required reply must be the payment of the issue fee or any outstanding balance thereof.

(2) the petition fee as set forth in 37 CFR 1.17(l);

(3) a showing to the satisfaction of the Commissioner that the entire delay in filing the required reply from the due date for the reply until the filing of a grantable petition pursuant to 37 CFR 1.137(a) was unavoidable; and

(4) any terminal disclaimer (and fee as set forth in 37 CFR 1.20(d)) required pursuant to 37 CFR 1.137(c)).

[2]Effective December 1, 1997, the provisions of 37 CFR 1.137(b) now provide that where the delay in reply was unintentional, a petition may be filed to revive an abandoned application or a lapsed patent pursuant to 37 CFR 1.137(b). A grantable petition filed under the provisions of 37 CFR 1.137(b) must be accompanied by:

(1) the required reply, unless previously filed. In a nonprovisional application abandoned for failure to prosecute, the required reply may be met by the filing of a continuing application. In a nonprovisional application filed on or after June 8, 1995, and abandoned for failure to prosecute, the required reply may also be met by the filing of a request for continued examination in compliance with § 1.114. In an application or patent, abandoned or lapsed for failure to pay the issue fee or any portion thereof, the required reply must be the payment of the issue fee or any outstanding balance thereof. In an application abandoned for failure to pay the publication fee, the required reply must include payment of the publication fee.

(2) the petition fee as set forth in 37 CFR 1.17(m);

(3) a statement that the entire delay in filing the required reply from the due date for the reply until the filing of a grantable petition pursuant to 37 CFR 1.137(b) was unintentional. The Commissioner may required additional information where there is a question whether the delay was unintentional; and

(4) any terminal disclaimer (and fee as set forth in 37 CFR 1.20(d)) required pursuant to 37 CFR 1.137(c)).

unintentional. A statement that the delay was unintentional is not appropriate if petitioner intentionally delayed the filing of a petition for revival under 37 CFR 1.137(b).

Further correspondence with respect to this matter should be addressed as follows:

By mail: Mail Stop Petition
Commissioner for Patents
P.O. Box 1450
Alexandria, VA 22313-1450

By FAX: (571) 273-8300

Telephone inquiries concerning this matter may be directed to the undersigned Petitions Attorney at (571) 272-3212.

Patricia Faison-Ball

Patricia Faison-Ball
Senior Petitions Attorney
Office of Petitions

UNITED STATES PATENT AND TRADEMARK OFFICE

COMMISSIONER FOR PATENTS
UNITED STATES PATENT AND TRADEMARK OFFICE
P.O. BOX 1450
ALEXANDRIA, VA 22313-1450
www.uspto.gov

Paper No. 11

REED SMITH LLP
3110 FAIRVIEW PARK DRIVE
SUITE 1400
FALLS CHURCH, VA 20042

COPY MAILED

MAR 1 5 2004

OFFICE OF PETITIONS

In re Application of
Tsuyoshi Yamamoto et al
Application No. 09/873,206
Filed: June 5, 2001
Attorney Docket No. NIPP.0001

DECISION ON PETITION
UNDER 37 CFR 1.55(c)

This is a decision on the petition under 37 CFR 1.55(a)(1)(ii), filed August 28, 2003, which is being treated as a petition under 37 CFR 1.55(c) requesting acceptance of an unintentionally delayed claim under 35 U.S.C. § 119 (a) - (d) and (f) for benefit of the filing date of the following foreign application: Japanese Application No. 10-347299, filed December 7, 1998.

The petition is **DISMISSED**.

A review of the file record, more specifically, the declaration filed with the instant application, discloses that applicant is claiming foreign priority benefits to Japanese Application No. 10-347299, but fails to claim 35 U.S.C. § 120 benefits to the PCT application; namely PCT Application No. PCT/JP99/06749. Since the filing of the Japanese application is more than one year from the date of filing of the instant nonprovisional application, this application is not entitled to a benefit claim under 37 CFR 1.55(a) to the Japanese application. However, applicant may wish to claim 35 U.S.C. § 120 benefits to the PCT application **if the PCT application was pending at the time of filing of the U.S. application.** Then, the Japanese foreign application will be filed within one year of the PCT application.

In view of the above, a petition under 37 CFR 1.78(a)(3), along with a renewed petition under 37 CFR 1.55(c), an amendment to the first line of the specification (or an Application Data Sheet in accordance with 37 CFR 1.76(b)(5)) to include the 35 U.S.C. § 120 benefits to the PCT application, a petition to withdraw from issue under 37 CFR 1.313(c)(2), and a Request for Continued Examination under 37 CFR 1.114 will be required in order for applicant to have the amendment to the specification considered by the

examiner after payment of the issue fee. Additionally, the relationship between the instant application and the PCT application must also be stated; i.e., whether the instant nonprovisional application is a continuation, division, or continuation-in-part of the PCT application.

Further correspondence with respect to this matter should be addressed as follows:

By mail: Mail Stop PETITIONS
Commissioner for Patents
Post Office Box 1450
Alexandria, VA 22313-1450

By hand: Customer Window located at:

2011 South Clark Place
Crystal Plaza Two Lobby
Room 1B03
Arlington, VA 22202

By fax: (703) 872-9306
ATTN: Office of Petitions

Any questions concerning this matter may be directed to the undersigned at (703) 305-8680.

Frances Hicks

Frances Hicks
Petitions Examiner
Office of Petitions
Office of the Deputy Commissioner
for Patent Examination Policy

UNITED STATES PATENT AND TRADEMARK OFFICE

COMMISSIONER FOR PATENTS
UNITED STATES PATENT AND TRADEMARK OFFICE
P.O. BOX 1450
ALEXANDRIA, VA 22313-1450
www.uspto.gov

Paper No.16

STANLEY P. FISHER
REED SMITH HAZEL & THOMAS LLP
3110 FAIRVIEW PARK DRIVE, SUITE 1400
FALLS CHURCH VA 22042-4503

COPY MAILED

APR 0 6 2004

OFFICE OF PETITIONS

In re Application of :
Tsuyoshi Yamamoto et al :
Application No. 09/873,206 :
Filed: June 5, 2001 :
Attorney Docket No. NIPP.0001 :

ON PETITION

This is a decision on the petition, filed March 16, 2004, under 37 CFR 1.313(c)(2) to withdraw the above-identified application from issue after payment of the issue fee.

The petition is **GRANTED.**

The above-identified application is withdrawn from issue for consideration of a submission under 37 CFR 1.114 (request for continued examination). See 37 CFR 1.313(c)(2).

Petitioner is advised that the issue fee paid on May 19, 2003 in the above-identified application cannot be refunded. If, however, the above-identified application is again allowed, petitioner may request that it be applied towards the issue fee required by the new Notice of Allowance.[1]

Telephone inquiries should be directed to the undersigned at (703) 305-8859.

After receipt of the file in the Office of Petitions, the application will be forwarded to Technology Center AU 3742 for processing of the request for continued examination under 37 CFR 1.114.

Karen Creasy

Karen Creasy
Petitions Examiner
Office of Petitions
Office of the Deputy Commissioner
for Patent Examination Policy

---

[1] The request to apply the issue fee to the new Notice may be satisfied by completing and returning the new Issue Fee Transmittal Form PTOL-85(b), which includes the following language thereon: "Commissioner for Patents is requested to apply the Issue Fee and Publication Fee (if any) or re-apply any previously paid issue fee to the application identified above." Petitioner is advised that, whether a fee is indicated as being due or not, the Issue Fee Transmittal Form **must** be completed and timely submitted to avoid abandonment. Note the language in bold text on the first page of the Notice of Allowance and Fee(s) Due (PTOL-85).

UNITED STATES PATENT AND TRADEMARK OFFICE

COMMISSIONER FOR PATENTS
UNITED STATES PATENT AND TRADEMARK OFFICE
P.O. BOX 1450
ALEXANDRIA, VA 22313-1450
www.uspto.gov

Paper No. 17

STANLEY P. FISHER
REED SMITH HAZEL & THOMAS LLP
3110 FAIRVIEW PARK DRIVE, SUITE 1400
FALLS CHURCH VA 22042-4503

COPY MAILED

APR 0 6 2004

OFFICE OF PETITIONS

In re Application of	:
Tsuyoshi Yamamoto et al	: DECISION ON PETITION
Application No. 09/873,206	: UNDER 37 CFR 1.78(a)(3)
Filed: June 5, 2001	: AND UNDER 37 CFR 1.55(c)
Attorney Docket No. NIPP.0001	:

This is a decision on the petition under 37 CFR 1.78(a)(3) and the renewed petition under 37 CFR 1.55(c), filed March 16, 2004, to accept an unintentionally delayed claim under 35 U.S.C. §§ 120 and 365(c) for the benefit of a prior-filed PCT application, and under 35 U.S.C. § 119 for the benefit of a prior-filed foreign application.

The petitions are **Dismissed**.

As to the benefit claim under 37 CFR 1.78(a)(3):

A petition for acceptance of a claim for late priority under 37 CFR 1.78(a)(3) is only applicable to those applications filed on or after November 29, 2000. Further, the petition is appropriate only after the expiration of the period specified in 37 CFR 1.78(a)(2)(ii). In addition, the petition under 37 CFR 1.78(a)(3) must be accompanied by:

(1) the reference required by 35 U.S.C. § 120 and 37 CFR 1.78(a)(2)(i) of the prior-filed application, unless previously submitted;[1]
(2) the surcharge set forth in § 1.17(t); and
(3) a statement that the entire delay between the date the claim was due under 37 CFR 1.78(a)(2)(ii) and the

[1] Any nonprovisional application or international application designating the United States of America claiming the benefit of one or more prior-filed copending applications or international applications designating the United States of America must contain or be amended to contain a reference (amendment to the first line of the specification following the title or in an application data sheet (ADS) to each such prior-filed application, identifying it by application number (consisting of the series code and serial number) or international application number and international filing date filing date and indicating the relationship of the applications. Cross references to other related applications may be made when appropriate (*see* § 1.14).

> date the claim was filed was unintentional. The Commissioner may require additional information where there is a question whether the delay was unintentional.

The instant petition does not comply with item (1).

In the Office letter mailed March 15, 2004, it stated that "the relationship between the instant application and the PCT application must also be stated; i.e., whether the instant nonprovisional application is a continuation, division, or continuation-in-part of the PCT application. This information should be provided in an amendment or an application data sheet.

As to the benefit claim under 37 CFR 1.55(c):

A petition for acceptance of a claim for foreign priority under 37 CFR 1.55(c) is only applicable to those applications filed on or after November 29, 2000. Further, the nonprovisional application must be filed within 12 months of the filing date of the foreign application. In addition, a petition under 37 CFR 1.55(c) to accept an unintentionally delayed claim for priority under 35 U.S.C. § 119(a)-(d) must be accompanied by:

> **(1)** the claim under 35 U.S.C. §119(a)-(d) to the prior foreign application, unless previously submitted;[2]
> **(2)** the surcharge set forth in § 1.17(t); and
> **(3)** a statement that the entire delay between the date the claim was due and the date the claim was filed was unintentional. The Commissioner may require additional information where there is a question whether the delay was unintentional.

The instant petition does not comply with item (1).

In the amendment submitted with the instant petition, the foreign priority claim for benefits to Japanese Application No. 10-347299, filed December 7, 1998, should not be included in the amendment claiming priority under 35 U.S.C. § 120. The foreign application, Japanese No. 10-347299, filed December 7, 1998, is included in the declaration submitted with the instant application.

---

[2] The claim must identify in the oath or declaration the foreign application for which priority is claimed, as well as any foreign application for the same subject matter and having a filing date before that of the application for which priority is claimed, by specifying the application number, country, and the filing date. *Note* also 37 CFR 1.63(c)(2).

Before the petitions can be granted, the above matters should be corrected.

Further correspondence with respect to this matter should be addressed as follows:

By mail: Mail Stop PETITIONS
Commissioner for Patents
Post Office Box 1450
Alexandria, VA 22313-1450

By hand: Customer Window located at:

2011 South Clark Place
Crystal Plaza Two Lobby
Room 1B03
Arlington, VA 22202

By fax: (703) 872-9306
ATTN: Office of Petitions

Telephone inquiries concerning this decision should be directed to the undersigned at (703) 305-8859.

Karen Creasy

Karen Creasy
Petitions Examiner
Office of Petitions
Office of the Deputy Commissioner
for Patent Examination Policy

UNITED STATES PATENT AND TRADEMARK OFFICE

Commissioner for Patents
United States Patent and Trademark Office
P.O. Box 1450
Alexandria, VA 22313-1450
www.uspto.gov

Paper No. 20

REED SMITH LLP
3110 FAIRVIEW PARK DRIVE,
SUITE 1400
FALLS CHURCH, VA 22042

COPY MAILED

OCT 0 8 2004

OFFICE OF PETITIONS

In re Application of
Tsuyoshi Yamamoto et al
Application No. 09/873,206
Filed: June 5, 2001
For: OPTICAL MEASUREMENT DEVICE

: DECISION ON PETITION
: UNDER 37 CFR 1.78(a)(3)
: AND UNDER 37 CFR 1.55(c)

This is a decision on the renewed petition under 37 CFR 1.78(a)(3) and 37 CFR 1.55(c), filed September 18, 2004, and September 22, 2004, to accept an unintentionally delayed claim under 35 U.S.C. §§ 120 and 365(c) for the benefit of priority to the prior-filed PCT application, and under 35 U.S.C. § 119 for the benefit of a prior-filed foreign application.

The petitions are **GRANTED**.

As to the benefit claim under 37 CFR 1.78(a)(3):

A petition for acceptance of a claim for late priority under 37 CFR 1.78(a)(3) is only applicable to those applications filed on or after November 29, 2000. Further, the petition is appropriate only after the expiration of the period specified in 37 CFR 1.78(a)(2)(ii). In addition, the petition under 37 CFR 1.78(a)(3) must be accompanied by:

(1) the reference required by 35 U.S.C. § 120 and 37 CFR 1.78(a)(2)(i) of the prior-filed application, unless previously submitted;[1]

---

[1] Any nonprovisional application or international application designating the United States of America claiming the benefit of one or more prior-filed copending applications or international applications designating the United States of America must contain or be amended to contain a reference (amendment to the first line of the specification following the title or in an application data sheet (ADS) to each such prior-filed application, identifying it by application number (consisting of the series code and

> **(2)** the surcharge set forth in § 1.17(t); and
> **(3)** a statement that the entire delay between the date the claim was due under 37 CFR 1.78(a)(2)(ii) and the date the claim was filed was unintentional. The Commissioner may require additional information where there is a question whether the delay was unintentional.

The instant pending application was filed on June 5, 2001, and was pending at the time of filing of the instant petition. A reference to the prior-filed application has been included in an amendment to the first sentence of the specification following the title, as required by 37 CFR 1.78(a)(2)(iii).

The instant nonprovisional application was filed after November 29, 2000, and the claim herein for the benefit of priority to the prior-filed PCTapplication is submitted after expiration of the period specified in 37 CFR 1.78(a)(2)(ii). Also, the reference to the prior-filed PCTapplication was submitted during the pendency of the instant nonprovisional application, for which the claim for benefit of priority is sought. *See* 35 U.S.C. § 120 . Accordingly, having found that the instant petition for acceptance of an unintentionally delayed claim for the benefit of priority under 35 U.S.C. §§ 120 and 365(c) to the prior-filed PCTapplication satisfies the conditions of 37 CFR 1.78(a)(3), the petition is granted.

As to the benefit claim under 37 CFR 1.55(c):

A petition for acceptance of a claim for foreign priority under 37 CFR 1.55(c) is only applicable to those applications filed on or after November 29, 2000. Further, the nonprovisional application must be filed within 12 months of the filing date of the foreign application. In addition, a petition under 37 CFR 1.55(c) to

---

serial number) or international application number and international filing date filing date and indicating the relationship of the applications. Cross references to other related applications may be made when appropriate (*see* § 1.14).

accept an unintentionally delayed claim for priority under 35 U.S.C. § 119(a)-(d) must be accompanied by:

> **(1)** the claim under 35 U.S.C. §119(a)-(d) to the prior foreign application, unless previously submitted;[2]
> **(2)** the surcharge set forth in § 1.17(t); and
> **(3)** a statement that the entire delay between the date the claim was due and the date the claim was filed was unintentional. The Commissioner may require additional information where there is a question whether the delay was unintentional.

The instant pending nonprovisional application was filed after November 29, 2000, and did not include a reference to the foreign application, for which benefit is now sought, within the later of four months from the actual filing date of the application or sixteen months from the filing date of the prior foreign application. Therefore, since the claim for priority is submitted after the period specified in 37 CFR 1.55(a)(1)(i), this is an appropriate petition under the provisions of 37 CFR 1.55(c).

The above-identified pending nonprovisional application was filed on June 5, 2001, which is after November 29, 2000 and intermediate prior-filed PCT Application No. PCT/JP99/06749 was filed on December 1, 1999, within 12 months of foreign Application No. 10-347299, filed December 7, 1998 (the filing date of the foreign application to which benefit is now being claimed). On June 5, 2001, a declaration was received which identifies the foreign application for which priority is claimed by application number, country and filing date. Lastly, petitioner has provided an adequate statement of unintentional delay.

All requirements being met, the petition under 37 CFR 1.55(c) to accept an unintentionally delayed claim for priority under 35 U.S.C. § 119(a) through (d) is granted.

---

[2] The claim must identify in the oath or declaration the foreign application for which priority is claimed, as well as any foreign application for the same subject matter and having a filing date before that of the application for which priority is claimed, by specifying the application number, country, and the filing date. *Note* also 37 CFR 1.63(c)(2).

A corrected Filing Receipt, which includes the priority claim to the prior-filed PCT application, and the foreign priority claim, accompanies this decision on petition.

The granting of the petition to accept the delayed benefit claim to the prior-filed application under 37 CFR 1.78(a)(3) should not be construed as meaning that the instant application is entitled to the benefit of the prior-filed application. In order for the instant application to be entitled to the benefit of the prior-filed application, all other requirements under 35 U.S.C. §§ 120 and 365(c) and 37 CFR 1.78(a)(1) and (a)(2) must be met. Similarly, the fact that the corrected Filing Receipt accompanying this decision on petition includes the prior-filed application should not be construed as meaning that applicant is entitled to the claim for benefit of priority to the prior-filed application noted thereon. Accordingly, the examiner will, in due course, consider this benefit claim and determine whether the instant application is entitled to the benefit of the earlier filing date.

Any inquiries concerning this decision may be directed to Karen Creasy at (571) 272-3208.

This application is being forwarded to Technology Center Art Unit 3742 for consideration by the examiner of applicant's entitlement to claim benefit of priority under 35 U.S.C. §§ 120 and 365(c) to prior-filed PCT Application No. PCT/JP99/06749, filed December 1, 1999, and for consideration of the foreign priority claim under 35 U.S.C. § 119 for the benefit of Foreign Application No. 10-347299, filed December 7, 1998.

Karen Creasy

Karen Creasy
Petitions Examiner
Office of Petitions
Office of the Deputy Commissioner
for Patent Examination Policy

ATTACHMENT: Corrected Filing Receipt

UNITED STATES PATENT AND TRADEMARK OFFICE

COMMISSIONER FOR PATENTS
UNITED STATES PATENT AND TRADEMARK OFFICE
P.O. BOX 1450
ALEXANDRIA, VA 22313-1450
www.uspto.gov

NIXON & VANDERHYE, PC
901 NORTH GLEBE ROAD, 11TH FLOOR
ARLINGTON, VA 22203

COPY MAILED

SEP 05 2006

OFFICE OF PETITIONS

In re Application of :
Maertens, et al. :
Application No. 09/873,224 : PATENT TERM ADJUSTMENT
Filed: June 5, 2001 :
Dkt. No.: 2752-45 :

This is a decision on the "APPLICATION FOR PATENT TERM ADJUSTMENT PURSUANT TO 37 CFR § 1.705(b)," filed June 5, 2006.

The Determination of Patent Term Adjustment under 35 U.S.C. 154(b) in the above-identified application, mailed March 3, 2006, indicated that the patent term adjustment (PTA) to date is 303 days. The instant application for patent term adjustment was timely filed June 5, 2006. Applicants argue the application is entitled to an additional adjustment of 53 days and an overall adjustment of 356 days.

Applicants herein have not disputed the PTA accorded to date (303 days). Instead, the instant application for PTA requests reconsideration of the PTA as it relates to the Office's failure to issue the patent within three years of the filing date of the application. A decision is being **held in abeyance** until after the actual patent date. Knowledge of the actual date the patent issues is required to calculate the amount, if any, of additional patent term for Office failure to issue the patent within three years. *See*, 37 CFR 1.703(b).

Applicants are given **TWO (2) MONTHS** from the issue date of the patent to file a written request for reconsideration of the PTA for Office failure to issue the patent within three years. A copy of this decision should accompany the request. Applicants may seek such consideration without payment of an additional fee. However, as to all other bases for seeking reconsideration of the PTA indicated in the patent, all requirements of 37 CFR 1.705(d) must be met. Requests for reconsideration on other bases must be timely filed and must include payment of the required fee.

Applicants are reminded that if an application is entitled to an adjustment under 35 USC 154(b)(1)(B), the entire period during which the application was pending (except for periods excluded under 35 USC 154(b)(1)(B)(i)-(iii)), and not just the period beginning three years after the actual filing date of the application, is the period of delay under 35 USC 154(b)(1)(B) in determining whether periods of delay overlap under 35 USC 154(b)(2)(A).

Thus, any days of delay for Office issuance of the patent more than three years after the filing date of the application that overlap with the days of patent term adjustment accorded prior to the issuance of the patent will not result in any additional patent term adjustment. *See*, 35 USC 154(b)(1)(B), 35 USC 154(b)(2)(A), and 37 CFR § 1.703(f). *See, also, Revision of Patent Term Extension and Patent Term Adjustment Provisions; Final Rule*, 69 Fed. Reg. 21704 (April 22, 2004).

The Office acknowledges receipt of the required application fee of $200.00. No additional fee will be required if applicants are solely requesting reconsideration of additional time related to failing to issue the patent within three years in accordance with 37 CFR 1.702(b).

This application is being forwarded to the Office of Patent Publication for processing into a patent.

Telephone inquiries specific to this matter should be directed to Petitions Attorney Alesia M. Brown at (571) 272-3205.

Kery A Fries

Kery Fries
Senior Legal Advisor
Office of Patent Legal Administration
Office of Deputy Commissioner
for Patent Examination Policy

UNITED STATES PATENT AND TRADEMARK OFFICE

Commissioner for Patents
United States Patent and Trademark Office
P.O. Box 1450
Alexandria, VA 22313-1450
www.uspto.gov

COPY MAILED

APR 0 5 2006

OFFICE OF PETITIONS

OLIFF & BERRIDGE
P.O. BOX 19928
ALEXANDRIA VA 22320

In re Application of :
Hiromi Ohara :
Application No. 09/873,235 : ON PETITION
Filed: June 5, 2001 :
Attorney Docket No. 109697 :

This is a decision on the petition, filed April 4, 2006, under 37 CFR 1.313(c)(2) to withdraw the above-identified application from issue after payment of the issue fee.

The petition is **GRANTED**.

The above-identified application is withdrawn from issue for consideration of a submission under 37 CFR 1.114 (request for continued examination). See 37 CFR 1.313(c)(2).

Petitioner is advised that the issue fee paid on March 24, 2006, in the above-identified application cannot be refunded. If, however, the above-identified application is again allowed, petitioner may request that it be applied towards the issue fee required by the new Notice of Allowance.[1]

Telephone inquiries should be directed to the undersigned at (571) 272-3208.

The examiner of Technology Center AU 2625 will consider the request for continued examination under 37 CFR 1.114.

Karen Creasy
Petitions Examiner
Office of Petitions
Office of the Deputy Commissioner
for Patent Examination Policy

---

[1] The request to apply the issue fee to the new Notice may be satisfied by completing and returning the new Issue Fee Transmittal Form PTOL-85(b), which includes the following language thereon: "Commissioner for Patents is requested to apply the Issue Fee and Publication Fee (if any) or re-apply any previously paid issue fee to the application identified above." Petitioner is advised that, whether a fee is indicated as being due or not, the Issue Fee Transmittal Form **must** be completed and timely submitted to avoid abandonment. Note the language in bold text on the first page of the Notice of Allowance and Fee(s) Due (PTOL-85).

#10
DW

UNITED STATES PATENT AND TRADEMARK OFFICE

NOV - 5 2004

Commissioner for Patents
United States Patent and Trademark Office
P.O. Box 1450
Alexandria, VA 22313-1450
www.uspto.gov

MAILED

NOV - 5 2004

OFFICE OF THE DIRECTOR
TC 3600

D. Doak Horne
Gowling Lafleur Hemerson LLP
700 - 2nd Street SW., Suite 1400 Scotia Centre
Calgary, Alberta
Canada, T2P 4V5

In re Application of
Thomas H Stockmann
Application Number 09/873,243
Filed: June 5, 2001
FOR: HYDRAULIC PLATFORM LIFT INCORPORATING POSITIVE DISPLACEMENT VALVE, AND POSITIVE DISPLACEMENT VALVE FOR HYDRAULIC PLATFORM LIFT

PETITION FOR SUPERVISORY REVIEW UNDER 37 CFR 1.181

This is in response to applicant's Petition 37 CFR 1.137(a) filed on November 12, 2003 to revive an application that went abandoned unavoidably. This petition is being treated as a petition for supervisory review under 37 CFR 1.181.

The petition is **DISMISSED.**

The history of the file is as follows:

- A written restriction requirement with a shortened statutory period of one month was mailed on October 29, 2002.
- On November 5, 2002 applicant responded with an amendment to the claims and in the paragraph that bridged pages 5 and 6 elected claims 13-20.
- The amendment did not include a clean version of all of the claims, as required by 37 CFR 1.121(c)(1)(i). A letter was mailed on November 5, 2002 holding the amendment non-compliant and applicant was given 30 days to file a compliant amendment.
- On November 22, 2002 applicant filed a clean copy and a marked-up copy of the claims but did not restate the election of claims 13-20.
- On February 21, 2003, the examiner held the November 22, 2003 response to be non-responsive because this amendment did not include the election and gave applicant 30 days to respond.
- Applicant did not respond in writing to the non-responsive letter. There is no record of the telephone conversation of March 11, 2003 that applicant refers to between the attorney and the examiner.
- The application was held abandoned on September 9, 2003.
- Applicant petitioned to revive the application on November 12, 2003. With this petition, applicant included a copy of the amendment filed on October 29, 2002. This is the amendment, which was held non-compliant on November 5, 2002. It is noted that the rules requiring amendments ot include a copy of all the claims changed in June 2003.

- Applicant filed an IDS on April 16, 2004 and a preliminary amendment on May 12, 2004. It is noted that the amendment filed on May 12, 2004 cancels claims 13-21 and adds new claims 22-46. This amendment does not state with claims are readable on the elected embodiment.

In summary, the examiner was in error when he held the amendment of November 22, 2002 non-responsive but it was applicant's failure to respond in writing to the letter holding the amendment non-responsive that was the reason the application was held abandoned.

It is noted that 37CFR 1.2 states:

> All business with the Patent and Trademark Office should be transacted in writing. The personal attendance of applicants or their attorneys or agents at the Patent and Trademark Office is unnecessary. The action of the Patent and Trademark Office will be based exclusively on the written record in the Office. No attention will be paid to any alleged oral promise, stipulation, or understanding in relation to which there is disagreement or doubt.

For a petition to revive under 37 CFR 1.137 to be granted, the following the requirements must be met:

(a) *Unavoidable.* If the delay in reply by applicant or patent owner was unavoidable, a petition may be filed pursuant to this paragraph to revive an abandoned application, a reexamination proceeding terminated under §§ 1.550(d) or 1.957(b) or (c), or a lapsed patent. A grantable petition pursuant to this paragraph must be accompanied by:

(1) The reply required to the outstanding Office action or notice, unless previously filed;

(2) The petition fee as set forth in § 1.17(l);

(3) A showing to the satisfaction of the Director that the entire delay in filing the required reply from the due date for the reply until the filing of a grantable petition pursuant to this paragraph was unavoidable; and

(4) Any terminal disclaimer (and fee as set forth in § 1.20(d)) required pursuant to paragraph (d) of this section.

Applicant has not complied with item (1) of 37 CFR 1.137 and 37 CFR 1.2. A telephone call to the examiner is not sufficient to respond to a letter with a statutory period. The time period continues to run until applicant responds. Furthermore, the copy of the amendment included with the petition is not in compliance with the rules as changed in June of 2003. Further, the amendment filed on May 12, 2004 does not state how the claims are readable on the elected embodiment and therefore would not be a sufficient response. Therefore, if the application were to be revived, both amendments would be non-compliant.

SUMMARY: The petition is **DISMISSED.**

Inquiries related to this decision may be directed to Supervisory Patent Examiner Eileen D. Lillis at (703) 308-3248.

Robert Oberleitner
Director TC 3600
Patent Technology Center 3600
703-308-1134

RO: edl

UNITED STATES PATENT AND TRADEMARK OFFICE

Commissioner for Patents
United States Patent and Trademark Office
P.O. Box 1450
Alexandria, VA 22313-1450
www.uspto.gov

Paper # 12

D. DOAK HORNE
c/o GOWLING LAFLEUR HENDERSON
SUITE 1400
700 - 2ND STREET S.W.
CALGARY AB T2P 4V5 CA CANADA

COPY MAILED

APR 27 2005

OFFICE OF PETITIONS

ON PETITION

In re Application of
Thomas Stockmann
Application No.09/873,243
Filed: June 5, 2001
Attorney Docket Number: A882688US
Title of Invention: HYRDRAULIC PLATFORM LIFT INCORPORATING POSITIVE DISPLACEMENT VALVE, AND POSITIVE DISPLACEMENT VALVE FOR HYDRAULIC PLATFORM LIFT

This is a decision on the petition filed November 12, 2003, under 37 CFR 1.137(a) to revive the above-identified application.

The petition to revive under 37 CFR § 1.137(a) is **DISMISSED**.

Any request for reconsideration must be submitted within TWO (2) MONTHS from the mail date of this decision. Extensions of time under 37 CFR § 1.136(a) are permitted. The reconsideration request should include a cover letter entitled "Renewed Petition under 37 CFR § 1.137(a)." This is **not** a final agency action within the meaning of 5 U.S.C. § 704.

This above-identified application became abandoned for failure to timely file a complete reply to the non-final Office Action of October 1, 2002. A Notice of Non-Compliant Amendment (37 CFR 1.121) was mailed on February 21, 2003 which set an extendable reply period of one month. This application became abandoned on March 22, 2003. A Notice of Abandonment was mailed on September 24, 2003. A petition filed under 37 CFR 1.181 requesting Supervisory Review was dismissed on November 5, 2004.

PETITION TO REVIVE UNDER 37 CFR § 1.137(a)
A grantable petition under 37 CFR § 1.137(a) must be accompanied by:

(1) the required reply,[1]
(2) the petition fee,
(3) a showing to the satisfaction of the Director that the entire delay in filing the required reply from the due date for the reply until the filing of a grantable petition pursuant to this paragraph was unavoidable, and
(4) a terminal disclaimer and fee if the application was filed on or before June 8, 1995 or if the application is a design application.

The instant petition lacks items (3).

As to item (3), the showing of record is not sufficient to establish to the satisfaction of the Director that the delay was unavoidable within the meaning of 37 CFR §1.137(a).

The Office may revive an abandoned application if the delay in responding to the relevant outstanding office requirement is shown to the satisfaction of the Commissioner to have been "unavoidable." See, 37 CFR § 1.137(a)(3). Decisions on reviving abandoned applications have adopted the reasonably prudent person standard in determining if the delay was unavoidable. Ex parte Pratt, 1887 Dec. Comm'r Pat. 31, 32-33 (Comm'r Pat. 1887) (the term "unavoidable" is applicable to ordinary human affairs, and requires no more greater care or diligence than is generally used and observed by prudent and careful men in relation to their most important business."); In re Mattullath, 38 App. D.C. 497, 514-15 (D.C. Cir. 1912); Ex parte Henrich, 1913 Dec. Comm'r Pat. 139, 141 (Comm'r Pat. 1913). In addition, decisions on revival are made on a "case by case basis, taking all the facts and circumstances into account." Smith v. Mossinghoff, 671 F.2d 533, 538, 213 USPQ 977, 982 (D.C. Cir. 1982). A petition to revive an application as unavoidably abandoned cannot be granted where petitioner has failed to meet his or her burden of establishing the cause of the unavoidable delay. Haines v. Quigg, 673 F. Supp. 314, 5 USPQ2D 1130 (N.D. Ind. 1987).

The showing of record is inadequate to establish unavoidable delay within the meaning of 35 U.S.C. § 133 and 37 CFR 1.137(a).[2] Specifically, an application is "unavoidably" abandoned only where petitioner, or counsel for petitioner, takes all action necessary for a proper response to the outstanding Office action, but through the intervention of unforeseen circumstances, such as failure of mail, telegraph, facsimile, or the negligence of otherwise reliable employees, the response is not timely received in the Office.[3]

Petitioner asserts the application was unavoidably delayed because in response to a Notice of Non-Compliance petitioner called Examiner Tran on March 11, 2003 and informed the Examiner he believed the Notice of Non-Compliance was mailed in error. Petitioner states that Examiner Tran agreed to review all the claims to see if a restriction was still required. Petitioner contends Examiner Tran stated if he determined that a restriction was not required, an Office Action on all the claims would be issued. Petitioner argues that based upon the phone call with Examiner Tran he did not believe that he needed to respond to the February 21 , 2003 Office Action. Petitioner's arguments have been considered but they are not persuasive. A "reasonably prudent person" would file papers or fees in compliance with 37 CFR 1.8 or 1.10 to ensure their timely filing in the USPTO, as well as preserve adequate evidence of such filing, a delay caused by an applicant's failure to file papers or fees in compliance with 37 CFR 1.8 and 1.10 does not constitute "unavoidable" delay. See

---

[1] In a nonprovisional application abandoned for failure to prosecute, the required reply may be met by the filing of a continuing application. In an application or patent, abandoned or lapsed for failure to pay the issue fee or any portion thereof, the required reply must be the payment of the issue fee or any outstanding balance thereof.

[2] See MPEP 711(c)(III)(c)(2) for a discussion of the requirements for a showing of unavoidable delay.

[3] Ex parte Pratt, 1887 Dec. Comm'r Pat. 31 (Comm'r Pat. 1887).

Krahn, 15 USPQ2d at 1825.

Petitioner's reliance upon a conversation with Examiner Tran is not convincing because a delay caused by an applicant's lack of knowledge or improper application of the patent statute, rules of practice or the MPEP is not rendered "unavoidable" due to: (A) the applicant's reliance upon oral advice from USPTO employees; or (B) the USPTO's failure to advise the applicant of any deficiency in sufficient time to permit the applicant to take corrective action. See In re Sivertz, 227 USPQ 255, 256 (Comm'r Pat. 1985).

Further, pursuant to 37 CFR 1.2, all business with the Patent and Trademark Office should be transacted in writing. The action of the Patent and Trademark Office will be based exclusively on the written record in the Office. No attention will be paid to any alleged oral promise, stipulation, or understanding in relation to which there is disagreement or doubt.

Accordingly, petitioner has failed to provide sufficient arguments that warrant the finding of unavoidable delay within the meaning of 37 CFR 1.137(a).

Alternative Venue

Petitioner may wish to consider filing a petition to revive based on unintentional abandonment under 37 CFR 1.137(b). A grantable petition pursuant to 37 C.F.R. § 1.137(b) must be accompanied by the required reply, the required petition fee, and a statement that the **entire** delay in filing the required reply from the due date for the reply until the filing of a grantable petition pursuant to 37 C.F.R. § 1.137(b) was unintentional.

The filing of a petition under 37 C.F.R. § 1.137(b) cannot be intentionally delayed, and therefore, must be filed promptly. A person seeking revival due to unintentional delay cannot make a statement that the delay was unintentional unless the entire delay, including the delay from the date it was discovered that the application was abandoned until the filing of the petition to revive under 37 C.F.R. § 1.137(b), was unintentional. A statement that the delay was unintentional is not appropriate if petitioner intentionally delayed the filing of a petition for revival under 37 C.F.R. § 1.137(b).

Further correspondence with respect to this matter should be addressed as follows:

By mail:	Mail Stop Petition Commissioner for Patents P.O. Box 1450 Alexandria, VA 22313-1450
By facsimile:	(703) 872-9306
By delivery service: (FedEx, UPS, DHL, etc.)	U.S. Patent and Trademark Office Randolph Building 401 Dulany Street Alexandria, VA 22314

Telephone inquiries should be directed to the undersigned at (571) 272-3215.

Charlema R. Grant
Petitions Attorney
Office of Petitions

UNITED STATES PATENT AND TRADEMARK OFFICE

Commissioner for Patents
United States Patent and Trademark Office
P.O. Box 1450
Alexandria, VA 22313-1450
www.uspto.gov

Paper # 15

D. DOAK HORNE
c/o GOWLING LAFLEUR HENDERSON
SUITE 1400
700 - 2ND STREET S.W.
CALGARY AB T2P 4V5 CA CANADA

COPY MAILED

JUN 2 2 2005

OFFICE OF PETITIONS

In re Application of
Thomas Stockmann
Application No.09/873,243
Filed: June 5, 2001
Attorney Docket Number: A882688US
Title of Invention: HYRDRAULIC PLATFORM LIFT INCORPORATING POSITIVE DISPLACEMENT VALVE, AND POSITIVE DISPLACEMENT VALVE FOR HYDRAULIC PLATFORM LIFT

ON PETITION

This is a decision on the petition filed May 26, 2005, under 37 CFR 1.137(b) to revive the above-identified application.

This above-identified application became abandoned for failure to timely file a complete reply to the non-final Office Action of October 1, 2002. A Notice of Non-Compliant Amendment (37 CFR 1.121) was mailed on February 21, 2003 which set an extendable reply period of one month. This application became abandoned on March 22, 2003. A Notice of Abandonment was mailed on September 24, 2003. A petition filed under 37 CFR 1.181 requesting Supervisory Review was dismissed on November 5, 2004. A petition under 37 CFR 1.137 (a) was dismissed on April 27, 2005.

This petition is hereby **GRANTED**.

The Office hereby acknowledges the receipt of the amendment submitted with the instant petition.

This application is being forwarded to Technology Center 3600 for further processing.

Telephone inquiries should be directed to the undersigned at (571) 272-3215.

Charlema R. Grant
Petitions Attorney
Office of Petitions

UNITED STATES PATENT AND TRADEMARK OFFICE

COMMISSIONER FOR PATENTS
UNITED STATES PATENT AND TRADEMARK OFFICE
P.O. BOX 1450
ALEXANDRIA, VA 22313-1450
www.uspto.gov

FISH & RICHARDSON P.C.
P.O. BOX 1022
MINNEAPOLIS MN 55440-1022

COPY MAILED
JUL 27 2006
OFFICE OF PETITIONS

In re Application of	:	
Appelman	:	
Application No. 09/873,272	:	DECISION ON PETITION
Filed: June 5, 2001	:	UNDER 37 CFR 1.78(a)(3)
Attorney Docket No. 06975-054001/Network 02	:	

This is a decision on the petition under 37 CFR 1.78(a)(3), filed February 13, 2006 and resubmitted March 13, 2006, to accept an unintentionally delayed claim under 35 U.S.C. § 120 for the benefit of priority to the prior-filed nonprovisional applications set forth in the amendment filed March 13, 2006.

The petition is **DISMISSED.**

A petition for acceptance of a claim for late priority under 37 CFR 1.78(a)(3) is only applicable to those applications filed on or after November 29, 2000. Further, the petition is appropriate only after the expiration of the period specified in 37 CFR 1.78(a)(2)(ii). In addition, the petition under 37 CFR 1.78(a)(3) must be accompanied by:

(1) the reference required by 35 U.S.C. § 120 and 37 CFR 1.78(a)(2)(i) of the prior-filed application(s), unless previously submitted;
(2) the surcharge set forth in § 1.17(t); and
(3) a statement that the entire delay between the date the claim was due under 37 CFR 1.78(a)(2)(ii) and the date the claim was filed was unintentional. The Director may require additional information where there is a question whether the delay was unintentional.[1]

[1] 37 CFR § 1.78(a)(3) requires a statement that the entire delay between the date the claim was due under 37 CFR § 1.78(a)(2)(ii) and the date the claim was filed was unintentional. Since the statement contained in the petition varies from the language required by 37 CFR 1.78(a)(3), the statement contained in the instant petition is being construed as the statement required by 37 CFR 1.78(a)(3). If this is not a correct interpretation, petitioner should promptly notify the Office.

The petition does not satisfy item (1) above.

The reference to add the prior-filed applications on page one following the first sentence of the specification is not acceptable as drafted since it improperly incorporates by reference prior-filed application no. 09/371,208. Petitioner's attention is directed to Dart Industries v. Banner, 636 F.2d 684, 207 USPQ 273 (C.A.D.C. 1980), where the court drew a distinction between a permissible 35 U.S.C. § 120 statement and the impermissible introduction of new matter by way of incorporation by reference in a 35 U.S.C. § 120 statement. The court specifically stated:

> Section 120 merely provides a mechanism whereby an application becomes entitled to benefit of the filing date of an earlier application disclosing the same subject matter. Common subject matter must be disclosed, in both applications, either specifically or by an express incorporation-by-reference of prior disclosed subject matter. Nothing in section 120 itself operates to carry forward any disclosure from an earlier application. In re deSeversky, supra at 674, 177 USPQ at 146-147. Section 120 contains no magical disclosure-augmenting powers able to pierce new matter barriers. It cannot, therefore, "limit" the absolute and express prohibition against new matter contained in section 251.

In order for the incorporation by reference statement to be effective as a proper safeguard against the omission of a portion of a prior application, the incorporation by reference statement must be included in the specification-as-filed, or in an amendment specifically referred to in an oath or declaration executing the application. *See* In re deSeversky, *supra*. *Note also* MPEP 201.06(c).

Before the petition under 37 CFR § 1.78(a)(3) can be granted, a renewed petition and a substitute amendment or an Application Data Sheet (complying with the provisions of 37 CFR 1.121 and 37 CFR 1.76(b)(5)) to correct the above matter is required.

Regarding fees, petitioner filed a $130.00 petition fee on February 13, 2006. This fee is unnecessary and will be refunded to deposit account no. 06-1050.

Further correspondence with respect to this matter should be addressed as follows:

By mail: Mail Stop PETITIONS
Commissioner for Patents
Post Office Box 1450
Alexandria, VA 22313-1450

By hand: Customer Service Window
Mail Stop Petitions
Randolph Building
401 Dulany Street
Alexandria, VA 22314

By fax: (571) 273-8300
ATTN: Office of Petitions

Any questions concerning this matter may be directed to Petitions Attorney Shirene Willis Brantley at (571) 272-3230.

Frances Hicks
Lead Petitions Examiner
Office of Petitions

UNITED STATES PATENT AND TRADEMARK OFFICE

Commissioner for Patents
United States Patent and Trademark Office
P.O. Box 1450
Alexandria, VA 22313-1450
www.uspto.gov

FISH & RICHARDSON P.C.
P.O. BOX 1022
MINNEAPOLIS MN 55440-1022

COPY MAILED

JAN 17 2007

OFFICE OF PETITIONS

In re Application of	:	
Appelman	:	
Application No. 09/873,272	:	DECISION ON PETITION
Filed: June 5, 2001	:	UNDER 37 CFR 1.78(a)(3)
Attorney Docket No. 06975-054001/Network 02	:	

This is a decision on the reconsideration petition under 37 CFR 1.78(a)(3), filed September 27, 2006, to accept an unintentionally delayed claim under 35 U.S.C. § 120 for the benefit of priority to the prior-filed nonprovisional applications set forth in the concurrently filed Application Data Sheet.

The petition is **DISMISSED.**

Any request for reconsideration should be submitted within two months of the mail date of this decision. No additional petition fee is required.

A final Office action was mailed in this application on September 7, 2006. The examiner of record has indicated that the proposed amendment to claim priority to the prior-filed applications raises new issues that would require further consideration and/or search.

The submission of an RCE is a condition for acceptance of the late claim for priority under 37 CFR 1.78(a)(3) in this instance. Please remember that time period for reply set in the September 7, 2006 final Office action continues to run.

Further correspondence with respect to this matter should be addressed as follows:

By mail: Mail Stop PETITION
Commissioner for Patents
Post Office Box 1450
Alexandria, VA 22313-1450

By hand: U.S. Patent and Trademark Office
Customer Service Window, Mail Stop Petition
Randolph Building
401 Dulany Street
Alexandria, VA 22314

By FAX: (571) 273-8300 - ATTN: Office of Petitions

Any inquiries concerning this decision may be directed to the undersigned at (571) 272-3230.

Shirene Willis Brantley

Shirene Willis Brantley
Office of Petitions
Office of Petitions

UNITED STATES PATENT AND TRADEMARK OFFICE

Commissioner for Patents
United States Patent and Trademark Office
P.O. Box 1450
Alexandria, VA 22313-1450
www.uspto.gov

FISH & RICHARDSON P.C.
P.O. BOX 1022
MINNEAPOLIS MN 55440-1022

COPY MAILED

MAR 1 3 2007

OFFICE OF PETITIONS

In re Application of	:	
Appelman	:	
Application No. 09/873,272	:	DECISION ON PETITION
Filed: June 5, 2001	:	UNDER 37 CFR 1.78(a)(3)
Attorney Docket No. 06975-054001/Network 02	:	

This is a decision on the reconsideration petition under 37 CFR 1.78(a)(3), filed February 7, 2007, to accept an unintentionally delayed claim under 35 U.S.C. § 120 for the benefit of priority to the prior-filed nonprovisional applications set forth in the concurrently filed Application Data Sheet.

The petition is **GRANTED.**

A petition for acceptance of a claim for late priority under 37 CFR 1.78(a)(3) is only applicable to those applications filed on or after November 29, 2000. Further, the petition is appropriate only after the expiration of the period specified in 37 CFR 1.78(a)(2)(ii). In addition, the petition under 37 CFR 1.78(a)(3) must be accompanied by:

(1) the reference required by 35 U.S.C. § 120 and 37 CFR 1.78(a)(2)(i) of the prior-filed application(s), unless previously submitted;
(2) the surcharge set forth in § 1.17(t); and
(3) a statement that the entire delay between the date the claim was due under 37 CFR 1.78(a)(2)(ii) and the date the claim was filed was unintentional. The Director may require additional information where there is a question whether the delay was unintentional.

All of the above requirements having been satisfied, the late claim for priority under 35 U.S.C. § 120 is accepted as being unintentionally delayed.

The granting of the petition to accept the delayed benefit claim to the prior-filed applications under 37 CFR 1.78(a)(3) should not be construed as meaning that this application is entitled to the benefit of the prior-filed applications. In order for this application to be entitled to the

benefit of the prior-filed applications, all other requirements under 35 U.S.C. § 120 and 37 CFR 1.78(a)(1) and (a)(2) must be met. Similarly, the fact that the corrected Filing Receipt accompanying this decision on petition includes the prior-filed applications should not be construed as meaning that applicant is entitled to the claim for benefit of priority to the prior-filed applications noted thereon. Accordingly, the examiner will, in due course, consider this benefit claim and determine whether the application is entitled to the benefit of the earlier filing date.

A corrected Filing Receipt, which includes the priority claim to the prior-filed nonprovisional applications, accompanies this decision on petition.

Petitioners submitted a second $1,370.00 fee with the September 27, 2006 petition. Only one fee is required. Deposit account no. 06-1050 will be credited $1,370.00.

Any inquiries concerning this decision may be directed to the undersigned at (571) 272-3230. All other inquiries concerning either the examination procedures or status of the application should be directed to the Technology Center.

This application is being forwarded to Technology Center Art Unit 2155for consideration by the examiner of applicant's entitlement to claim benefit of priority under 35 U.S.C. § 120 to the prior-filed applications and the concurrently filed RCE.

Shirene Willis Brantley

Shirene Willis Brantley
Office of Petitions
Office of Petitions

ATTACHMENT: Corrected Filing Receipt

UNITED STATES PATENT AND TRADEMARK OFFICE

UNITED STATES DEPARTMENT OF COMMERCE
United States Patent and Trademark Office
Address: COMMISSIONER FOR PATENTS
P.O. Box 1450
Alexandria, Virginia 22313-1450
www.uspto.gov

APPL NO.	FILING OR 371(c) DATE	ART UNIT	FIL FEE REC'D	ATTY.DOCKET NO	TOT CLMS	IND CLMS
09/873,272	06/05/2001	2155	1146	06975-054001	37	3

CONFIRMATION NO. 6031

CORRECTED FILING RECEIPT

OC000000022816230

26171
FISH & RICHARDSON P.C.
P.O. BOX 1022
MINNEAPOLIS, MN 55440-1022

Date Mailed: 03/08/2007

Receipt is acknowledged of this regular Patent Application. It will be considered in its order and you will be notified as to the results of the examination. Be sure to provide the U.S. APPLICATION NUMBER, FILING DATE, NAME OF APPLICANT, and TITLE OF INVENTION when inquiring about this application. Fees transmitted by check or draft are subject to collection. Please verify the accuracy of the data presented on this receipt. **If an error is noted on this Filing Receipt, please mail to the Commissioner for Patents P.O. Box 1450 Alexandria Va 22313-1450. Please provide a copy of this Filing Receipt with the changes noted thereon. If you received a "Notice to File Missing Parts" for this application, please submit any corrections to this Filing Receipt with your reply to the Notice. When the USPTO processes the reply to the Notice, the USPTO will generate another Filing Receipt incorporating the requested corrections (if appropriate).**

Applicant(s)

Barry Appelman, McLean, VA;

Power of Attorney:

Charles Winchester Jr--21040
John Pegram--25198
William Booth--28933
G Lee--28963
John Freeman--29066
Timothy French--30175
Ralph Mittelberger--33195
Ruffin Cordell--33487
Rene Tegtmeyer--33567
Heather Goo--37336

Domestic Priority data as claimed by applicant

This application is a CIP of 09/371,208 08/10/1999 PAT 6,385,656
which is a CON of 08/630,846 04/11/1996 PAT 6,112,250

Foreign Applications

If Required, Foreign Filing License Granted: 08/03/2001

The country code and number of your priority application, to be used for filing abroad under the Paris Convention, is US09/873,272

Projected Publication Date: Not Applicable

Non-Publication Request: No

Early Publication Request: No

Title

Caching signatures

Preliminary Class

709

PROTECTING YOUR INVENTION OUTSIDE THE UNITED STATES

Since the rights granted by a U.S. patent extend only throughout the territory of the United States and have no effect in a foreign country, an inventor who wishes patent protection in another country must apply for a patent in a specific country or in regional patent offices. Applicants may wish to consider the filing of an international application under the Patent Cooperation Treaty (PCT). An international (PCT) application generally has the same effect as a regular national patent application in each PCT-member country. The PCT process **simplifies** the filing of patent applications on the same invention in member countries, but **does not result** in a grant of "an international patent" and does not eliminate the need of applicants to file additional documents and fees in countries where patent protection is desired.

Almost every country has its own patent law, and a person desiring a patent in a particular country must make an application for patent in that country in accordance with its particular laws. Since the laws of many countries differ in various respects from the patent law of the United States, applicants are advised to seek guidance from specific foreign countries to ensure that patent rights are not lost prematurely.

Applicants also are advised that in the case of inventions made in the United States, the Director of the USPTO must issue a license before applicants can apply for a patent in a foreign country. The filing of a U.S. patent application serves as a request for a foreign filing license. The application's filing receipt contains further information and guidance as to the status of applicant's license for foreign filing.

Applicants may wish to consult the USPTO booklet, "General Information Concerning Patents" (specifically, the section entitled "Treaties and Foreign Patents") for more information on timeframes and deadlines for filing foreign patent applications. The guide is available either by contacting the USPTO Contact Center at 800-786-9199, or it can be viewed on the USPTO website at http://www.uspto.gov/web/offices/pac/doc/general/index.html.

For information on preventing theft of your intellectual property (patents, trademarks and copyrights), you may wish to consult the U.S. Government website, http://www.stopfakes.gov. Part of a Department of Commerce initiative, this website includes self-help "toolkits" giving innovators guidance on how to protect intellectual property in specific countries such as China, Korea and Mexico. For questions regarding patent enforcement issues, applicants may call the U.S. Government hotline at 1-866-999-HALT (1-866-999-4158).

LICENSE FOR FOREIGN FILING UNDER
Title 35, United States Code, Section 184
Title 37, Code of Federal Regulations, 5.11 & 5.15

GRANTED

The applicant has been granted a license under 35 U.S.C. 184, if the phrase "IF REQUIRED, FOREIGN FILING LICENSE GRANTED" followed by a date appears on this form. Such licenses are issued in all applications where the conditions for issuance of a license have been met, regardless of whether or not a license may be required as set forth in 37 CFR 5.15. The scope and limitations of this license are set forth in 37 CFR 5.15(a) unless an earlier license has been issued under 37 CFR 5.15(b). The license is subject to revocation upon written notification. The date indicated is the effective date of the license, unless an earlier license of similar scope has been granted

under 37 CFR 5.13 or 5.14.

This license is to be retained by the licensee and may be used at any time on or after the effective date thereof unless it is revoked. This license is automatically transferred to any related applications(s) filed under 37 CFR 1.53(d). This license is not retroactive.

The grant of a license does not in any way lessen the responsibility of a licensee for the security of the subject matter as imposed by any Government contract or the provisions of existing laws relating to espionage and the national security or the export of technical data. Licensees should apprise themselves of current regulations especially with respect to certain countries, of other agencies, particularly the Office of Defense Trade Controls, Department of State (with respect to Arms, Munitions and Implements of War (22 CFR 121-128)); the Bureau of Industry and Security, Department of Commerce (15 CFR parts 730-774); the Office of Foreign Assets Control, Department of Treasury (31 CFR Parts 500+) and the Department of Energy.

NOT GRANTED

No license under 35 U.S.C. 184 has been granted at this time, if the phrase "IF REQUIRED, FOREIGN FILING LICENSE GRANTED" DOES NOT appear on this form. Applicant may still petition for a license under 37 CFR 5.12, if a license is desired before the expiration of 6 months from the filing date of the application. If 6 months has lapsed from the filing date of this application and the licensee has not received any indication of a secrecy order under 35 U.S.C. 181, the licensee may foreign file the application pursuant to 37 CFR 5.15(b).

UNITED STATES PATENT AND TRADEMARK OFFICE

Commissioner for Patents
United States Patent and Trademark Office
P.O. Box 1450
Alexandria, VA 22313-1450
www.uspto.gov

PENROSE LUCAS ALBRIGHT ESQ.
MASON, MASON & ALBRIGHT
P.O. BOX 2246
ARLINGTON, VA 22202-0246

COPY MAILED

FEB 17 2006

OFFICE OF PETITIONS

In re Application of	:	
Van Der Lely, Olaf	:	
Application No. 09/873,337	:	ON PETITION
Filed: June 5, 2001	:	
Attorney Docket No. 8553/217	:	

This is a decision on the petition under 37 C.F.R. § 1.137(b), filed January 3, 2006, to revive the above-identified application.

The petition is **GRANTED.**

The petition satisfies the conditions for revival pursuant to the provisions of 37 CFR 1.137(b) in that (1) the reply in the form of an RCE and an Amendment; (2) the petition fee; and (3) the required statement of unintentional delay have been received. Accordingly, the response has been accepted as having been unintentionally delayed.

The application is being forwarded to Technology Center 3700 for processing of the Request for Continued Examination under 37 CFR 1.114 filed with the instant petition.

Telephone inquiries regarding this decision should be directed to the undersigned at (571) 272-3282.

Liana Chase
Petitions Examiner
Office of Petitions

UNITED STATES PATENT AND TRADEMARK OFFICE

Commissioner for Patents
United States Patent and Trademark Office
P.O. Box 1450
Alexandria, VA 22313-1450
www.uspto.gov

Howrey LLP-EU
c/o IP Docketing Department
2941 Fairview Park Drive
Suite 200
Falls Church, VA 22042

COPY MAILED

SEP 28 2009

OFFICE OF PETITIONS

In re Patent No. 7,082,740	:	
Issue Date: August 1, 2006	:	
Application No. 09/873,337	:	NOTICE
Filed: June 5, 2001	:	
Attorney Docket No.	:	

This is a notice regarding your request for acceptance of a fee deficiency submission under 37 CFR 1.28 filed December 12, 2008. On September 1, 1998, the Court of Appeals for the Federal Circuit held that 37 CFR 1.28(c) is the sole provision governing the time for correction of the erroneous payment of the issue fee as a small entity. **See DH Technology v. Synergystex International, Inc. 154 F.3d 1333, 47 USPQ2d 1865 (Fed. Cir. Sept. 1, 1998).**

The Office no longer investigates or rejects original or reissue applications under 37 CFR 1.56. **1098 Off. Gaz. Pat. Office 502 (January 3, 1989)**. Therefore, nothing in this Notice is intended to imply that an investigation was done.

Your fee deficiency submission under 37 CFR 1.28 is hereby accepted. The petition is **GRANTED**.

This application is no longer entitled to small entity status. Accordingly, all future fees paid in this application must be paid at the large entity rate.

This file is being forwarded to Files Repository.

Telephone inquiries related to this decision should be directed to the Kimberly Inabinet at (571) 272-4618.

Carl Friedman
Petitions Examiner
Office of Petitions

UNITED STATES PATENT AND TRADEMARK OFFICE

Commissioner for Patents
United States Patent and Trademark Office
P.O. Box 1450
Alexandria, VA 22313-1450
www.uspto.gov

GEORGE LIKOUREZOS
CARTER DELUCA FARRELL & SCHMIDT
445 BROAD HOLLOW ROAD - SUITE 225
MELVILLE, NY 11747

COPY MAILED

AUG 0 4 2004

OFFICE OF PETITIONS

In re Application of	:	
Mehul Patel et al	:	
Application No. 09/873,374	:	ON PETITION
Filed: June 5, 2001	:	
Attorney Docket No. 1400-24 DIV II	:	

This is a decision on the petition under 37 CFR 1.137(b), filed May 24, 2004, to revive the above-identified application.

The petition is **GRANTED**.

The above-identified application became abandoned for failure to submit the issue fee in a timely manner in reply to the Notice of Allowance mailed December 12, 2003, which set a statutory period for reply of three (3) months. Accordingly, the above-identified application became abandoned on March 13, 2004.

37 CFR 1.137(b)(3) requires a statement that the entire delay in filing the required reply from the due date for the reply until the filing of a grantable petition pursuant to 37 CFR 1.137(b) was unintentional. If the statement contained in the instant petition varies from the language required by 37 CFR 1.137(b)(3), the statement contained in the instant petition is being construed as the statement required by 37 CFR 1.137(b)(3) and petitioner must notify the Office if this is **not** a correct interpretation of the statement contained in the instant petition.

The Change of Attorney's Address In Application filed on May 24, 2004 is noted and made of record.

Telephone inquiries concerning this decision should be directed to Wan Laymon at (703) 306-5685.

This matter is being referred to the Publishing Division.

Wan Laymon
Wan Laymon
Petitions Examiner
Office of Petitions
Office of the Deputy Commissioner
for Patent Examination Policy

UNITED STATES PATENT AND TRADEMARK OFFICE

Commissioner for Patents
United States Patent and Trademark Office
P.O. Box 1450
Alexandria, VA 22313-1450
www.uspto.gov

PLATON N. MANDROS
BURNS, DOANE, SWECKER & MATHIS
P.O. BOX 1404
ALEXANDRIA VA 22313-1404

COPY MAILED

MAY 13 2005

OFFICE OF PETITIONS

In re Application of :
Kazuma Tanaka et al :
Application No. 09/873,375 :
Filed: June 5, 2001 :
Attorney Docket No. 018976-196 :

ON PETITION

This is a decision on the petition, filed May 10, 2005, under 37 CFR 1.313(c)(2) to withdraw the above-identified application from issue after payment of the issue fee.

The petition is **GRANTED.**

The above-identified application is withdrawn from issue for consideration of a submission under 37 CFR 1.114 (request for continued examination). See 37 CFR 1.313(c)(2).

Petitioner is advised that the issue fee paid on February 4, 2005 in the above-identified application cannot be refunded. If, however, the above-identified application is again allowed, petitioner may request that it be applied towards the issue fee required by the new Notice of Allowance.[1]

Telephone inquiries should be directed to the undersigned at (571) 272-3208.

The examiner of Technology Center AU 2854 will consider the request for continued examination under 37 CFR 1.114.

Karen Creasy

Karen Creasy
Petitions Examiner
Office of Petitions
Office of the Deputy Commissioner
for Patent Examination Policy

---

[1] The request to apply the issue fee to the new Notice may be satisfied by completing and returning the new Issue Fee Transmittal Form PTOL-85(b), which includes the following language thereon: "Commissioner for Patents is requested to apply the Issue Fee and Publication Fee (if any) or re-apply any previously paid issue fee to the application identified above." Petitioner is advised that, whether a fee is indicated as being due or not, the Issue Fee Transmittal Form **must** be completed and timely submitted to avoid abandonment. Note the language in bold text on the first page of the Notice of Allowance and Fee(s) Due (PTOL-85).

UNITED STATES PATENT AND TRADEMARK OFFICE

Commissioner for Patents
United States Patent and Trademark Office
P.O. Box 1450
Alexandria, VA 22313-1450
www.uspto.gov

Paper No.

WESTERMAN, HATTORI,
DANIELS & ADRIAN, LLP
1250 CONNECTICUT AVENUE, NW
SUITE 700
WASHINGTON DC 20036

COPY MAILED

JUN 14 2007

OFFICE OF PETITIONS

In re Application of	:	
Masahiro Shioji	:	
Application No. 09/873,413	:	LETTER REGARDING
Filed: June 5, 2001	:	PATENT TERM ADJUSTMENT
Attorney Docket No. 010728	:	

This letter is in response to the "LETTER TO THE EXAMINER REGARDING PATENT TERM ADJUSTMENT" filed February 28, 2007. Pursuant to applicant's duty of good faith and candor to the Office, applicant discloses that the initial determination of patent term adjustment mailed with the Notice of Allowance may be longer than appropriate.

The request for correction of the initial determination of patent term adjustment (PTA) is **DISMISSED**.

On November 18, 2006, the Office mailed the Determination of Patent Term Adjustment under 35 U.S.C. 154(b) in the above-identified application. The Notice stated that the patent term adjustment to date is 777 days. Applicant discloses that the Office delay in taking action on May 5, 2005 to their non-final Office action filed October 22, 2004 should be calculated as 44 days, instead of 72 days. Applicant asserts that in calculating Office delay, the Office erred in using the date of November 22, 2004 for the date of receipt of their non-final Office action.

The application history has been reviewed and it has been decided that the determination of patent term adjustment is correct. Applicant is incorrect. The Office used the October 22, 2004 date in calculating Office delay. Pursuant to 37 CFR 1.702(a)(2) and 1.703(a)(2), in this instance, the period of

delay for the Office taking more than four months to respond to a reply under 35 U.S.C. 132 is 72 days, counting the number of days in the period beginning on the day after the date that is four months after the date a reply under § 1.111 was filed, February 23, 2005 and ending on the date of mailing of either an action under 35 U.S.C. 132, May 5, 2005.

In view thereof, the determination of PTA at the time of the mailing of the notice of allowance of seven hundred seventy-seven (777) days is correct.

As this letter was submitted as an attempt to advise the Office of an error in Applicant's favor, the Office will not assess the $200.00 fee under 37 CFR 1.18(e). The Office thanks applicant for their good faith and candor in bringing this to the attention of the Office.

The Office of Patent Publication has been advised of this decision. The application is, thereby, forwarded to the Office of Patent Publication for issuance of the application. The patent term adjustment indicated on the patent (as shown on the Issue Notification mailed about three weeks prior to patent issuance) will include any additional adjustment accrued both for Office delay in issuing the patent more than four months after payment of the issue fee and satisfaction of all outstanding requirements, and for the Office taking in excess of three years to issue the patent (to the extent that the three-year period does not overlap with periods already accorded).

Telephone inquiries specific to this decision should be directed to the undersigned at (571) 272-3219.

Nancy Johnson
Senior Petitions Attorney
Office of Petitions

UNITED STATES PATENT AND TRADEMARK OFFICE

Commissioner for Patents
United States Patent and Trademark Office
P.O. Box 1450
Alexandria, VA 22313-1450
www.uspto.gov

Paper No.

WESTERMAN, HATTORI,
DANIELS & ADRIAN, LLP
1250 CONNECTICUT AVENUE, NW
SUITE 700
WASHINGTON DC 20036

COPY MAILED

JUN 25 2007

OFFICE OF PETITIONS

In re Application of	:	
Masahiro Shioji	:	**CORRECTED**
Application No. 09/873,413	:	LETTER REGARDING
Filed: June 5, 2001	:	PATENT TERM ADJUSTMENT
Attorney Docket No. 010728	:	

This letter is in response to the "LETTER TO THE EXAMINER REGARDING PATENT TERM ADJUSTMENT" filed February 28, 2007. Pursuant to applicant's duty of good faith and candor to the Office, applicant discloses that the initial determination of patent term adjustment mailed with the Notice of Allowance may be longer than appropriate.

This decision is written to correct the decision of June 14, 2007. Therein, the review of the determination did not consider that the reply was received on November 22, 2004, not October 22, 2004.

The request for correction of the initial determination of patent term adjustment (PTA) is **GRANTED.**

The Office has updated the PAIR screen to reflect that the correct Patent Term Adjustment (PTA) determination at the time of the mailing of the Notice of Allowance is seven hundred forty-nine **(749)** days. A copy of the updated PAIR screen, showing the correct determination, is enclosed.

On November 18, 2006, the Office mailed the Determination of Patent Term Adjustment under 35 U.S.C. 154(b) in the above-identified application. The Notice stated that the patent term

adjustment to date is 777 days. Applicant discloses that the Office delay in taking action on May 5, 2005 to their non-final Office action filed November 22, 2004 should be calculated as 44 days, instead of 72 days. Applicant asserts that in calculating Office delay, the Office erred in using the date of October 22, 2004 for the date of receipt of their non-final Office action.

The application history has been reviewed and it has been decided that the determination of patent term adjustment is correct. Applicants are correct. The Office used the October 22, 2004 date in calculating Office delay. Using the correct date of November 22, 2004, pursuant to 37 CFR 1.702(a)(2) and 1.703(a)(2), the period of delay for the Office taking more than four months to respond to a reply under 35 U.S.C. 132 is 44 days, counting the number of days in the period beginning on the day after the date that is four months after the date a reply under § 1.111 was filed, March 23, 2005 and ending on the date of mailing of either an action under 35 U.S.C. 132, May 5, 2005.

In view thereof, the correct determination of PTA at the time of the mailing of the notice of allowance is seven hundred forty-nine (749) days.

As this letter was submitted as an attempt to advise the Office of an error in Applicant's favor, the Office will not assess the $200.00 fee under 37 CFR 1.18(e). The Office thanks applicant for their good faith and candor in bringing this to the attention of the Office.

The Office of Patent Publication has been advised of this decision. The application is, thereby, forwarded to the Office of Patent Publication for issuance of the application.

Telephone inquiries specific to this decision should be directed to the undersigned at (571) 272-3219.

Nancy Johnson
Senior Petitions Attorney
Office of Petitions

Enclosure: Updated PALM Screen

Day : Monday
Date: 6/25/2007

PALM INTRANET

Time: 08:39:58

PTA Calculations for Application: 09/873413			
Application Filing Date:	06/05/2001	PTO Delay (PTO):	824
Issue Date of Patent:		Three Years:	0
Pre-Issue Petitions:	0	Applicant Delay (APPL):	47
Post-Issue Petitions:	0	Total PTA (days):	749
PTO Delay Adjustment:	-28		

File Contents History

Number	Date	Contents Description	PTO	APPL	START
68	06/25/2007	ADJUSTMENT OF PTA CALCULATION BY PTO	44		
67	06/25/2007	ADJUSTMENT OF PTA CALCULATION BY PTO		72	
60	11/28/2006	MAIL NOTICE OF ALLOWANCE			
59	11/28/2006	MAIL FORMAL DRAWINGS REQUIRED			
58	11/27/2006	ISSUE REVISION COMPLETED			
57	11/27/2006	FORMAL DRAWINGS REQUIRED			
56	11/27/2006	NOTICE OF ALLOWANCE DATA VERIFICATION COMPLETED			
55	11/27/2006	CASE DOCKETED TO EXAMINER IN GAU			
54	11/27/2006	NOTICE OF ALLOWABILITY			
53	11/17/2006	DATE FORWARDED TO EXAMINER			
52	11/08/2006	RCE- AF PROCESSED			
51	11/17/2006	DATE FORWARDED TO EXAMINER			
50	11/08/2006	REQUEST FOR CONTINUED EXAMINATION (RCE)		25	42
49	11/17/2006	DISPOSAL FOR A RCE/CPA/129 (EXPRESS ABANDONMENT IF CPA)			
48	11/08/2006	REQUEST FOR EXTENSION OF TIME - GRANTED			
47	11/08/2006	WORKFLOW - REQUEST FOR RCE - BEGIN			
46	10/23/2006	MAIL ADVISORY ACTION (PTOL - 303)			
45	10/19/2006	ADVISORY ACTION (PTOL-303)			
44	10/18/2006	DATE FORWARDED TO EXAMINER			
43	10/12/2006	AMENDMENT AFTER FINAL REJECTION			
42	07/14/2006	MAIL FINAL REJECTION (PTOL - 326)			
41	07/10/2006	FINAL REJECTION			
40	04/28/2006	DATE FORWARDED TO EXAMINER			

39	04/20/2006	RESPONSE AFTER NON-FINAL ACTION			
38	03/21/2006	CASE DOCKETED TO EXAMINER IN GAU			
37	01/31/2006	MAIL NON-FINAL REJECTION			
36	01/26/2006	NON-FINAL REJECTION			
35	01/20/2006	DATE FORWARDED TO EXAMINER			
34	01/13/2006	AMENDMENT AFTER FINAL REJECTION		22	30
33	01/13/2006	REQUEST FOR EXTENSION OF TIME - GRANTED			
32	12/20/2005	MAIL EXAMINER INTERVIEW SUMMARY (PTOL - 413)			
31	12/15/2005	EXAMINER INTERVIEW SUMMARY RECORD (PTOL - 413)			
30	09/22/2005	MAIL FINAL REJECTION (PTOL - 326)			
29	09/19/2005	FINAL REJECTION			
28	08/03/2005	DATE FORWARDED TO EXAMINER			
27	07/27/2005	AMENDMENT SUBMITTED/ENTERED WITH FILING OF CPA/RCE			
26	08/03/2005	DATE FORWARDED TO EXAMINER			
25	07/27/2005	REQUEST FOR CONTINUED EXAMINATION (RCE)			
24	08/03/2005	DISPOSAL FOR A RCE/CPA/129 (EXPRESS ABANDONMENT IF CPA)			
23	07/27/2005	WORKFLOW - REQUEST FOR RCE - BEGIN			
22	05/05/2005	MAIL FINAL REJECTION (PTOL - 326)	72		18
21	05/02/2005	FINAL REJECTION			
20	04/28/2005	IFW TSS PROCESSING BY TECH CENTER COMPLETE			
19	02/23/2005	DATE FORWARDED TO EXAMINER			
18	10/22/2004	RESPONSE AFTER NON-FINAL ACTION			
17	10/01/2001	OATH OR DECLARATION FILED (INCLUDING SUPPLEMENTAL)			
16	11/22/2004	WORKFLOW INCOMING AMENDMENT IFW			
15	08/26/2004	MAIL NON-FINAL REJECTION	752		-1
14	08/23/2004	NON-FINAL REJECTION			
13	07/07/2004	CASE DOCKETED TO EXAMINER IN GAU			
12	12/31/2003	CORRESPONDENCE ADDRESS CHANGE			
11	12/19/2003	INFORMATION DISCLOSURE STATEMENT (IDS) FILED			
10	06/05/2001	REQUEST FOR FOREIGN PRIORITY (PRIORITY PAPERS MAY BE INCLUDED)			

9	08/28/2001	INFORMATION DISCLOSURE STATEMENT (IDS) FILED			
8	02/12/2003	CASE DOCKETED TO EXAMINER IN GAU			
7	11/26/2001	TRANSFER INQUIRY TO GAU			
6	10/31/2001	APPLICATION DISPATCHED FROM OIPE			
5	10/29/2001	APPLICATION IS NOW COMPLETE			
4	08/03/2001	NOTICE MAILED--APPLICATION INCOMPLETE--FILING DATE ASSIGNED			
3	08/03/2001	CORRESPONDENCE ADDRESS CHANGE			
2	06/11/2001	IFW SCAN & PACR AUTO SECURITY REVIEW			
1	06/05/2001	INITIAL EXAM TEAM NN			

Search Another: Application# Search

EXPLANATION OF PTA CALCULATION

EXPLANATION OF PTE CALCULATION

To go back use Back button on your browser toolbar.

Back to PALM | ASSIGNMENT | OASIS | Home page

UNITED STATES PATENT AND TRADEMARK OFFICE

Commissioner for Patents
United States Patent and Trademark Office
P.O. Box 1450
Alexandria, VA 22313-1450
www.uspto.gov

SYNGENTA CROP PROTECTION , INC.
PATENT AND TRADEMARK DEPARTMENT
410 SWING ROAD
GREENSBORO NC 27409

MAILED

FEB 0 2 2009

OFFICE OF PETITIONS

In re Application of

Scher, et al.

Application No. 09/873,418

Filed: June 5, 2001

Attorney Docket No. RIA57700

DECISION ON PETITION

This is a decision on the petition under 37 CFR 1.137(b), filed October 30, 2007, to revive the above-identified application.

The petition is **GRANTED**.

The above-identified application became abandoned for failure to file a proper response to the final Office action mailed March 27, 2007. The final Office action set a shortened statutory period for reply of three months from its mailing date. A response was filed on September 27, 2007, with an extension of time within the third month. An Advisory Action mailed October 23, 2007, advised that the response of September 27, 2007, failed to place the application in condition for allowance. No further responses were received and the application became abandoned on August 28, 2007.

The Request for Continued Examination filed October 30, 2007, is noted.

The application file is being forwarded to Technology Center 1600, GAU 1618 for further processing.

Telephone inquiries concerning this decision should be directed to the undersigned at (571) 272-3222.

Kenya A. McLaughlin
Petitions Attorney
Office of Petitions

UNITED STATES PATENT AND TRADEMARK OFFICE

Commissioner for Patents
United States Patent and Trademark Office
P.O. Box 1450
Alexandria, VA 22313-1450
www.uspto.gov

Novak Druce Deluca & Quigg, LLP
1300 Eye Street NW
Suite 400 East
Washington DC 20005

COPY MAILED

JUN 01 2005

OFFICE OF PETITIONS

In re Application of	:	
Kolter et al.	:	
Application No. 09/873,431	:	ON PETITION
Filed: June 5, 2001	:	
Attorney Docket No. 51497	:	

This is in response to the petition under 37 CFR 1.182, filed March 7, 2005, requesting that the Office withdraw the terminal disclaimer submitted on August 10, 2004.

With the present petition, petitioner submitted a petition fee of $130.00. However, effective December 8, 2004, the fee for a petition under 37 CFR 1.182 increased to $400.00. The rules and statutory provisions governing the operations of the Office require payment of a fee upon filing a petition. In this instance, the petition fee is deficient in the amount of $270.00. Moreover, Deposit Account No. 14-1437 has insufficient funds to pay the balance due.

The petition under 37 CFR 1.182 will not be treated on its merits, but rather will remain in the file until the Office receives a renewed petition under 37 CFR 1.182, as well as the balance of the fee due in the amount of $270.00.

Petitioner must file both a request for reconsideration and pay the balance due of $270.00 within **TWO (2) MONTHS** of this decision. No extensions of time are permissible.

Further correspondence with respect to this matter should be addressed as follows and **to the attention of Senior Petitions Attorney Christina Tartera Donnell:**

By mail: Mail Stop Petition
Commissioner for Patents
P.O. Box 1450
Alexandria, VA 22313-1450

By FAX: (703) 872-9306
Attn: Office of Petitions

By hand: Customer Service Window
Randolph Building
401 Dulany Street
Alexandria, VA 22314

Telephone inquiries related to this decision may be directed to the undersigned at (571) 272-3211.

Christina Tartera Donnell

Christina Tartera Donnell
Senior Petitions Attorney
Office of Petitions

UNITED STATES PATENT AND TRADEMARK OFFICE

Commissioner for Patents
United States Patent and Trademark Office
P.O. Box 1450
Alexandria, VA 22313-1450
www.uspto.gov

Novak Druce Deluca & Quigg, LLP
1300 Eye Street NW
Suite 400 East
Washington DC 20005

COPY MAILED

JUN 2 0 2005

OFFICE OF PETITIONS

In re Application of	:	
Kolter et al.	:	
Application No. 09/873,431	:	DECISION ON PETITION
Filed: June 5, 2001	:	
Attorney Docket No. 51497	:	

This is a decision on the renewed petition under 37 CFR 1.182, filed June 10, 2005, requesting that the Office withdraw the terminal disclaimer submitted on August 10, 2004.

Petitioners assert that due to an inadvertent error on the part of petitioners' representative, the terminal disclaimer of August 10, 2004, erroneously referenced U.S. Patent No. 4,837,032, instead of U.S. Patent No. 6,635,279. Petitioners have filed a terminal disclaimer correctly referencing U.S. Patent No. 6,635,279. Thus, petitioners request that the Office withdraw the erroneously filed terminal disclaimer of August 10, 2004.

As the examiner has concurred, the requested relief can be favorably considered. Accordingly, the petition is granted.

This application is being forwarded to Technology Center Art Unit 1618 for correction of PALM and file records consistent with this decision.

Telephone inquiries relative to this decision should be directed to the undersigned at (571) 272-3211.

Christina Tartera Donnell

Christina Tartera Donnell
Senior Petitions Attorney
Office of Petitions

UNITED STATES PATENT AND TRADEMARK OFFICE

COMMISSIONER FOR PATENTS
UNITED STATES PATENT AND TRADEMARK OFFICE
P.O. BOX 1450
ALEXANDRIA, VA 22313-1450
www.uspto.gov

ERIC ROBINSON
PMB 955
21010 SOUTHBANK ST.
POTOMAC FALLS, VA 20165

COPY MAILED
APR 28 2006
OFFICE OF PETITIONS

In re Application of :
Shunpei Yamazaki, et al. :
Application No. 09/873,447 : ON PETITION
Filed: June 5, 2001 :
Attorney Docket No.: 740756-2322 :

This is a decision on the petition, filed April 28, 2006, under 37 CFR 1.313(c)(2) to withdraw the above-identified application from issue after payment of the issue fee.

The petition is **GRANTED**.

The above-identified application is withdrawn from issue for consideration of a submission under 37 CFR 1.114 (request for continued examination). See 37 CFR 1.313(c)(2).

Petitioner is advised that the issue fee paid on March 9, 2006, in the above-identified application cannot be refunded. If, however, the above-identified application is again allowed, petitioner may request that it be applied towards the issue fee required by the new Notice of Allowance. [1]

Telephone inquiries relating to this decision should be directed to the undersigned at (571) 272-3204.

The application is being referred to Technology Center AU 2822 for further processing of the request for continued examination under 37 CFR 1.114.

Sherry D. Brinkley
Petitions Examiner
Office of Petitions

[1]The request to apply the issue fee to the new Notice may be satisfied by completing and returning the new Issue Fee Transmittal Form PTOL-85(b), which includes the following language thereon: " Commissioner for Patents is requested to apply the Issue Fee and Publication Fee (if any) or re-apply any previously paid issue fee to the application identified above." Petitioner is advised that, whether a fee is indicated as being due or not, the Issue Fee Transmittal Form must be completed and timely submitted to avoid abandonment. Note the language in bold text on the first page of the Notice of Allowance and Fee(s) Due (PTOL-85).

UNITED STATES PATENT AND TRADEMARK OFFICE

Commissioner for Patents
United States Patent and Trademark Office
P.O. Box 1450
Alexandria, VA 22313-1450
www.uspto.gov

Date : April 28, 2006

TO : Director, Office of Patent Publication

FROM : Office of the Deputy Commissioner for Patent Examination Policy

SUBJECT : Withdrawal from Issue of

Applicant(s) : Shunpei Yamazaki, et al.
Application No. : 09/873,447
Filed : June 5, 2001

The above-identified application has been assigned Patent No. 7,041,517 and an issue date of May 9, 2006.

It is hereby directed that this application be withdrawn from issue at the request of the applicant.

Do not refund the issue fee.

The following erratum should be published in the Official Gazette if the above-identified application is published in the OG of May 9, 2006:

> "All reference to Patent No. 7,041,517 to SHUNPEI YAMAZAKI, ET AL. of JAPAN for DISPLAY PANEL, DISPLAY PANEL INSPECTION METHOD, AND DISPLAY PANEL MANUFACTURING METHOD appearing in the Official Gazette of May 9, 2006, should be deleted since no patent was granted."

Sherry D. Brinkley
Petitions Examiner
Office of Petitions

cc: Paul Harrison, Crystal Park 3-44l (FAX-306-2737)
Deneise Boyd, Crystal Park 2, Suite 1100 (FAX-308-5413)
Mary Louise McAskill, Crystal Park 3-910 (FAX 305-4372)
Niomi Farmer, Crystal Park 3-9l0 (FAX-305-4372)
Mary E. Johnson (Cookie), P/OCS, CM1-6D07
Duane K.Davis, P/OCS, CM1-6A07
Tamara K. Greene, PK3-910

UNITED STATES PATENT AND TRADEMARK OFFICE

Commissioner for Patents
United States Patent and Trademark Office
P.O. Box 1450
Alexandria, VA 22313-1450
www.uspto.gov

KACVINSKY LLC
C/O INTELLEVATE
P.O. BOX 52050
MINNEAPOLIS, MN 55402

COPY MAILED

OCT 3 1 2007

OFFICE OF PETITIONS

In re Application of :
John Fan :
Application No. 09/873,449 :
Filed: June 5, 2001 :
Attorney Docket No. 1020P15418 :

ON PETITION

This is a decision on the petition under 37 CFR 1.137(b), filed July 18, 2007, to revive the above-identified application.

The petition is **GRANTED**.

The above-identified application became abandoned for failure to reply in a timely manner to the Office action mailed April 4, 2006, which set a shortened statutory period for reply of one (1) month or thirty (30) days (whichever is later). Accordingly, the above-identified application became abandoned on May 5, 2006.

Telephone inquiries concerning this decision should be directed to Irvin Dingle at (571) 272-3210.

This matter is being referred to Technology Center AU 2617 for further processing.

Irvin Dingle
Petitions Examiner
Office of Petitions

SPE RESPONSE FOR CERTIFICATE OF CORRECTION

Paper No.:20100412

DATE : April 12, 2010

TO SPE OF : ART UNIT 2617

SUBJECT : Request for Certificate of Correction on Patent No.: 7,502,630

A response is requested with respect to the accompanying request for a certificate of correction.

Please complete this form and return with file, within **7** days to:
Certificates of Correction Branch - ST (South Tower) 9A22
Palm location **7590** - Tel. No. (703) 305-8309

With respect to the change(s) requested, correcting Office and/or Applicant's errors, should the patent read as shown in the certificate of correction? No new matter should be introduced, nor should the scope or meaning of the claims be changed.

Thank You For Your Assistance **Certificates of Correction Branch**

The request for issuing the above-identified correction(s) is hereby:

Note your decision on the appropriated box.

☐ **Approved** All changes apply.

☒ **Approved in Part** Specify below which changes **do not** apply.

☐ **Denied** State the reasons for denial below.

Comments:

The request for correcting the spelling of the word Transceiver is acceptable.

However, the request for changing the dependency of claim 6 is not acceptable. This is not an error on the Office's part, but, rather an attempt to alter the scope of the claim, i.e., claim 6 currently requires only the specifics of claims 1 and 4 as opposed to the proposed change in which claim 6 would also include the limitations of claim 5.

/Dwayne Bost/
Supervisory Patent Examiner.Art Unit 2617

UNITED STATES PATENT AND TRADEMARK OFFICE

Commissioner for Patents
United States Patent and Trademark Office
P.O. Box 1450
Alexandria, VA 22313-1450
www.uspto.gov

Paper No. 9

GLENN PATENT GROUP
3475 EDISON WAY, SUITE L
MENLO PARK, CA 94025

COPY MAILED

JUL 27 2005

OFFICE OF PETITIONS

In re Application of :
Cord F. Staehler et al :
Application No. 09/873,455 : ON PETITION
Filed: June 4, 2001 :
Attorney Docket No. SCHO0056 :

This is a decision on the petition under 37 CFR 1.137(b), filed June 24, 2005, to revive the above-identified application.

The petition is **GRANTED**.

The above-identified application became abandoned for failure to reply in a timely manner to the non-final Office action mailed December 22, 2003, which set a shortened statutory period for reply of three (3) months. No extension of time under the provisions of 37 CFR 1.136(a) were obtained. Accordingly, the above-identified application became abandoned on March 23, 2004.

Telephone inquiries concerning this decision should be directed to Irvin Dingle at (571) 272-3210.

This application is being forwarded to Technology Center AU 1743 for further processing.

Irvin Dingle
Petitions Examiner
Office of Petitions
Office of the Deputy Commissioner
for Patent Examination Policy

UNITED STATES PATENT AND TRADEMARK OFFICE

COMMISSIONER FOR PATENTS
UNITED STATES PATENT AND TRADEMARK OFFICE
P.O. BOX 1450
ALEXANDRIA, VA 22313-1450
www.uspto.gov

HARNESS, DICKEY & PIERCE, P.L.C.
P.O. BOX 828
BLOOMFIELD HILLS, MI 48303

COPY MAILED

OCT 3 1 2005

OFFICE OF PETITIONS

In re Patent No. 6,801,425 :
Issued: October 5, 2004 :
Application No. 09/873,468 : PATENT TERM ADJUSTMENT
Filed: June 4, 2001 :
Atty. Dkt. No.: 0275L-000453 :

This is a decision on the "PETITION TO REQUEST RECONSIDERATION OF PATENT TERM ADJUSTMENT CALCULATION PURSUANT TO 37 CFR 1.705," filed October 22, 2004. This matter is being properly treated as a timely filed application for patent term adjustment under 37 CFR 1.704(d).

The application for patent term adjustment ("PTA") under 37 CFR 1.705(d) is **GRANTED TO THE EXTENT INDICATED HEREIN**.

Applicants have two months to reply to the decision. No extensions of time under 37 CFR 1.136 will be granted.

The above-identified application matured into U.S. Patent No. 6,801,425 on October 5, 2004. The patent issued with an adjustment of 48 days. Applicants herein argue that the patent term adjustment was improperly reduced 83 days in connection with a submission on July 15, 2004.

A review of the application history reveals that an adjustment of 237 days can be attributed to the Office[1].

---

[1] An adjustment of 163 days in accordance with 37 CFR 1.702(a)(1) can be attributed to the Office for failure to mail at least one of a notification under 35 U.S.C. 132 or a notice of allowance under 35 U.S.C. 151 not later than fourteen months after the date on which the application was filed. The adjustment began August 5, 2002, the day after the date that is 14 months after the date that the application was filed, and ended January 14, 2003, the date the non-final Office action was mailed. *See*, 37 CFR 1.703(a)(1). A further adjustment of 74 days can be attributed to the Office in accordance with 37 CFR 1.702(a)(2) for failure to respond not later than four months after the date on which a reply was filed or the appeal was taken. The adjustment began February 3, 2004, the day after the date that is four months after the date that the Appeal Brief was filed, and ended April 16, 2004, the date the Notice of Allowance was mailed.

The adjustment of 237 days is properly reduced a total of 162 days in accordance with 37 CFR 1.704 for applicants' failure to engage in reasonable efforts to conclude prosecution[2].

The Office errantly reduced the adjustment 83 days in connection with the "COMMENTS ON STATEMENTS OF REASONS FOR ALLOWANCE" submitted July 15, 2004. As argued by applicants, the Office has found that papers related to comments on the examiner's statement of reasons for allowance do not constitute failures to engage in reasonable efforts to conclude prosecution. *See*, MPEP 2732 and 1247 Off. Gaz. Pat. Off. 111 (June 26, 2001). However, the reduction for the submission of drawings has been increased from 64 days to 120 days because the two reductions no longer have overlapping periods of reduction.

Therefore, at the time of issuance, the patent was entitled to an adjustment of 237 days. The adjustment, however, is properly reduced 162 days for applicants' failure to engage in reasonable efforts to conclude prosecution, resulting in an overall adjustment of 75 days.

The PTA indicated on the patent is to be corrected by issuance of a certificate of correction showing a revised Patent Term Adjustment of 75 days.

This application file will be forwarded to the Certificate of Corrections branch for issuance of a certificate of correction to indicate that the term of this patent is extended or adjusted under 35 U.S.C. 154(b) by 75 days.

---

[2] The adjustment of 237 days is reduced 14 days in accordance with 37 CFR 1.704(c)(8) in connection with the IDS submitted March 10, 2003. The reduction began February 25, 2003, the day after the date that the response to the non-final Office action was filed, and ended March 10, 2003, the date that the supplemental response (IDS) was filed. The adjustment of 237 days is further reduced 27 days in accordance with in connection with the Notice of Appeal filed July 30, 2003 in accordance with 37 CFR 1.704(b). The reduction began July 4, 2003, the day after the date that is three months after the date that the final Office action was mailed, and ended July 30, 2003, the date the Notice of Appeal was filed. The adjustment of 237 days is further reduced one day in accordance with 37 CFR 1.704(c)(8) in connection with the IDS filed October 3, 2003. The reduction began October 3, 2003, the day after the date that an initial response (appeal brief) was filed, and ended October 3, 2003, the date the IDS was filed. The adjustment of 237 days is further reduced 120 days, the maximum period of reduction allowed by law, in accordance with 37 CFR 1.704(c)(10) in connection with the drawings submitted May 12, 2004. The submission of drawings after a Notice of Allowance has been mailed is deemed a failure to engage in reasonable efforts to conclude prosecution within the meaning of 37 CFR 1.704(c)(10). *See*, MPEP 2732 and 1247 Off. Gaz. Pat. Office 111 (June 26, 2001).

Telephone inquiries specific to this matter should be directed to Petitions Attorney Alesia M. Brown at (571) 272-3205.

Kery Fries

Kery Fries
Senior Legal Advisor
Office of Patent Legal Administration
Office of Deputy Commissioner
for Patent Examination Policy

CC: Draft Certificate of Correction

UNITED STATES PATENT AND TRADEMARK OFFICE

Commissioner for Patents
United States Patent and Trademark Office
Washington, D.C. 20231
www.uspto.gov

Paper No. 5

KNOBBE MARTENS OLSON & BEAR
LLP
2040 MAIN STREET
FOURTEENTH FLOOR
IRVINE, CA 92614

COPY MAILED

APR 0 7 2003

OFFICE OF PETITIONS

In re Application of
Schaumont et al.
Application No. 09/873,553
Filed: June 4, 2001
Attorney Docket Number:
IMEC65.1CP1C1

DECISION ON PETITION

This is a decision on the petition filed August 23, 2002, requesting that the above-identified application be accorded a filing date of June 4, 2001, with drawing figures 1a-24 as part of the original disclosure.

The petition is granted.

The application was deposited on June 4, 2001. On June 20, 2002, 2002, the Office mailed a Withdrawal of Previously Sent Notice, withdrawing a Notice sent on August 8, 2001, and also mailing a "Notice of Incomplete Nonprovisional Application" stating that the application had not been accorded a filing date because the application had been deposited without drawings.

Petitioner responds with the instant petition wherein Petitioner avers that the drawings in the above-identified application were incorporated by reference to prior application 09/237,549.

Initially it is noted that a review of the file reveals that the specification contains method claims (i.e., claims 24-37 and 41-53). As stated in MPEP § 601.01(f), it is the practice of the PTO to treat an application that contains at least one process or method claim as an application for which a drawing is not necessary for an understanding of the invention under 35 U.S.C. 113 (first sentence).

MPEP § 601.01(f) also states that:

> A nonprovisional application having at least one claim, or a provisional application having at least some disclosure, directed to the subject matter discussed above for which a drawing is usually not considered essential for a filing date, describing drawing

> figure(s) in the specification, but filed without drawings will be treated as an application filed without all of the drawing figures referred to in the specification as discussed in MPEP § 601.01(g), so long as the application contains something that can be construed as a written description.

This application contains method claims; therefore, the application should have been treated as an application filed without all of the drawing figures referred to in the specification as discussed in MPEP § 601.01(g).

In applications filed without all of the drawing figure(s) referred to in the specification, the MPEP § 601.01(g) states that a "Notice of Omitted Item(s)" is mailed indicating that the application has been accorded a filing date, but is lacking some of the figures of drawings described in the specification.

In this instance, a petition is not necessary to add the drawing figures. Applicants may add figure(s) described in the specification on the basis that the drawings are not new matter. New drawings may be entered by the primary examiner without a petition so long as the drawings contain no new matter. See, MPEP § 608.02(a).

MPEP 201.06(c) states:

> . . . an applicant may incorporate by reference the prior application by including, in the continuation or divisional application-as-filed, a statement that such specifically enumerated prior application or applications are "hereby incorporated by herein by reference." The statement may appear in the specification or in the application transmittal letter . . . . The inclusion of this incorporation by reference of the prior application(s) will permit an applicant to amend the continuation or divisional application to include any subject matter in such prior application(s), <u>without the need for a petition</u> provided the continuation or divisional application is entitled to a filing date notwithstanding the incorporation by reference. (emphasis supplied).

In view of the above, the Notices mailed June 20, 2002, were mailed in error and are hereby withdrawn.

This application is being forwarded to the Office of Initial Patent Examination, Customer Corrections, for further processing, with the filing date of June 4, 2001, and an indication that no drawings were required nor present on filing.

No petition fee is required and a refund of the petition fee has been credited to Petitioner's deposit account as authorized in the instant petition.

Telephone inquiries concerning this matter should be directed to Petitions Attorney Derek L. Woods at (703) 305-0014.

Christina Tartera Donnell for

Beverly M. Flanagan
Supervisory Petitions Examiner
Office of Petitions
Office of the Deputy Commissioner
for Patent Examination Policy

Conferee: Christina Donnell

UNITED STATES PATENT AND TRADEMARK OFFICE

Commissioner for Patents
United States Patent and Trademark Office
P.O. Box 1450
Alexandria, VA 22313-1450
www.uspto.gov

PAUL H. GINSBURG
PFIZER INC., 20TH FLOOR
235 EAST 42ND STREET
NEW YORK, NY 10017-5755

COPY MAILED

NOV 12 2004

OFFICE OF PETITIONS

In re Application of :
Michael J. Luzzio et al :
Application No. 09/873,555 :
Filed: June 4, 2001 :
Attorney Docket No. PC10795A :

ON PETITION

This is a decision on the petition under 37 CFR 1.137(b), filed October 7, 2004, to revive the above-identified application.

The petition is **GRANTED**.

The above-identified application became abandoned for failure to reply in a timely manner to the non-final Office action mailed January 22, 2004, which set a shortened statutory period for reply of three (3) months. No extensions of time under the provisions of 37 CFR 1.136(a) were obtained. Accordingly, the above-identified application became abandoned on April 23, 2004.

The file does not indicate a change of address has been submitted, although the address given on the petition differs from the address of record. If appropriate, a change of address should be filed in accordance with MPEP 601.03. A courtesy copy of this decision is being mailed to the address given on the petition; however, the Office will mail all future correspondence solely to the address of record.

Telephone inquiries concerning this decision should be directed to Irvin Dingle at (571) 272-3210.

The application is being forwarded to Technology Center AU 1624 for further processing.

Irvin Dingle
Petitions Examiner
Office of Petitions
Office of the Deputy Commissioner
for Patent Examination Policy

cc:

Krishna G. Banerjee
Pfizer, Inc. – Patent Dept, 5th Floor
150 East 42nd Street
New York, NY 10017-5755

UNITED STATES PATENT AND TRADEMARK OFFICE

OCT 24 2003

COMMISSIONER FOR PATENTS
UNITED STATES PATENT AND TRADEMARK OFFICE
P.O. BOX 1450
ALEXANDRIA, VA 22313-1450
www.uspto.gov

#11

OBLON, SPIVAK, McCLELLAND
MAIER & NEUSTADT, P.C.
FOUTH FLOOR
1755 JEFFERSON DAVIS HIGHWAY
ARLINGTON, VA 22202

In re Application of	:	PETITION DECISION
Kammerer et al	:	WITHDRAWAL FROM ISSUE
Serial No. 09/873,571	:	UNDER 37CFR 1.313(b)(3)
Filed: June 4, 2001	:	
For: Surgical Instrument and Method	For:	
Treating Female Urinary Incontinence	:	

This is in response to applicants' Petition mailed on August 9, 2002 to have the above-identified application withdrawn from issue under the provisions of 37 CFR 1.313(b)(3).

The application is being withdrawn to permit reopening of prosecution due to unpatentability of one or more claims. See 37CFR 1.313(b)(3).

The issue fee is refundable upon written request. If, however, the application is again found allowable, the issue fee can be applied toward payment of the issue fee in the amount identified on the new Notice of Allowance and Issue Fee Due upon written request. This request and any balance due must be received on or before the due date noted in the new Notice of Allowance in order to prevent abandonment of the application.

Telephone inquiries should be directed to John E. Kittle at (703) 308-0873.

The above-identified application is being forwarded to the examiner for prompt appropriate action, including notifying applicant of the new status of this application.

John E. Kittle
Director
Technology Center 3700/2900

UNITED STATES PATENT AND TRADEMARK OFFICE

Commissioner for Patents
United States Patent and Trademark Office
P.O. Box 1450
Alexandria, VA 22313-1450
www.uspto.gov

Andrew s. Langsam
LEVISOHN, BERGER & LANGSAM, LLP
805 Third Avenue, 19th Floor
New York, NY 10022

MAIL

JUN 0 2 2005

DIRECTOR OFFICE
TECHNOLOGY CENTER 2100

In re Application of:	)	
Kent R. Davey	)	
Application No. 09/873,622	)	
Filed: June 04, 2001	)	**DECISION ON REQUEST FOR**
For: METHOD FOR OPTIMIZING	)	**WITHDRAWAL AS ATTORNEY**
TRANSCRANIAL MAGNETIC	)	
STIMULATIION CORES AND	)	
MAGNETIC CORES PRODUCED		
THEREBY		

This is a decision on the Request For Withdrawal As Attorney Under 37 CFR § 1. 36 and 10.40(c) filed March 18, 2005.

A Revocation Of Power Of Attorney Under 37 CFR § 1. 36 was filed on March 18, 2005. The Power Of Attorney revoked all prior Powers Of Attorney and appointed the practioners of WOODCOCK WASHBURN LLP as the attorneys of record of the instant application. The Power Of Attorney filed March 18, 2005 was accepted. Accordingly, all communications from the U.S. Patent and Trademark Office to applicant are to be conducted by WOODCOCK WASHBURN LLP.

For the above stated reasons, the request is DISMISSED AS MOOT.

No further communication to you regarding this application will be made.

for

Vincent N. Trans
Special Program Examiner
Technology Center 2100
Computer Architecture, Software, and
Information Security
571-272-3613

UNITED STATES PATENT AND TRADEMARK OFFICE

Commissioner for Patents
United States Patent and Trademark Office
P.O. Box 1450
Alexandria, VA 22313-1450
www.uspto.gov

WOODCOCK WASHBURN
ONE LIBERTY PLACE, 46TH FLOOR
1650 MARKET STREET
PHILADELPHIA, PA 19103

COPY MAILED

MAR 0 8 2006

OFFICE OF PETITIONS

In re Application of	:	
Kent Davey	:	
Application No. 09/873,622	:	DECISION ON PETITION
Filed: June 4, 2001	:	TO WITHDRAW
Attorney Docket No. 2103.047	:	FROM RECORD

This is a decision on the Request to Withdraw as attorney or agent of record under 37 C.F.R. § 1.36(b), filed November 14, 2005.

The request is **NOT APPROVED**.

A grantable request to withdraw as attorney/agent of record must be signed by every attorney/agent seeking to withdraw or contain a clear indication that one attorney is signing on behalf of another/others. A request to withdraw will not be approved unless at least 30 (thirty) days would remain between the date of approval and the later of the expiration date of a time to file a response or the expiration date of the maximum time period which can be extended under 37 C.F.R. § 1.136(a).

The petition to withdraw as attorney cannot be approved because the reason for withdrawal was not indicated.

All future communications from the Office will continue to be directed to the above-listed address until otherwise notified by applicants.

Telephone inquiries concerning this decision should be directed to Wan Laymon at 571-272-3220.

Denise Pothier
Petitions Examiner
Office of Petitions

UNITED STATES PATENT AND TRADEMARK OFFICE

COMMISSIONER FOR PATENTS
UNITED STATES PATENT AND TRADEMARK OFFICE
P.O. BOX 1450
ALEXANDRIA, VA 22313-1450
www.uspto.gov

Paper No. 11

Dickstein Shapiro Morin & Oshinsky LLP
1177 Avenue of the Americas
41st Floor
New York, NY 10036-2714

MAILED

JUL 0 7 2005

Technology Center 2100

In re Application of: Ono
Application No. 09/873,649
Attorney Docket No. A3156.0022/PO22
Filed: June 4, 2001
For: INTEGRATED CIRCUIT FOR MODEM

DECISION ON PETITION TO WITHDRAW HOLDING OF ABANDONMENT UNDER 37 CFR §1.181

This is a decision on the request for reconsideration filed August 5, 2004 by Mr. Steven I. Weisburd requesting the Withdrawal of the Holding of Abandonment of the above-identified application. The original petition, filed April 9, 2004, was dismissed July 7, 2004. This application was held abandoned for failure to respond to the Office action mailed September 23, 2003 (Paper No. 3). A Notice of Abandonment was mailed on March 31, 2004 (Paper No. 4).

Applicable Prosecution History

September 23, 2003	FAOM mailed to Ostrolenk Faber Gerb & Soffen (Paper no. 3)
March 31, 2004	Notice of Abandonment mailed
April 9, 2004	Petition to withdraw abandonment filed
May 28, 2004	Change of address submitted for Dickstein et al.
October 28, 2004	Revocation of power of attorney filed

Evidence in Support of Original Petition

In the original petition, Mr. Weisburd provided a declaration that the Office action was not received; that the practitioner filed a change of address "on or about February 6, 2002"; and that the practitioner became aware of the Office action when the examiner contacted the practitioner (date not specified). The petition further contained a statement from the practitioner that a search of the file jacket and the docket records indicates the Office action was not received. A copy of the Dickstein docket record was included.

The petition stated Mr. Weisburd transferred his practice from Ostrolenk Faber Gerb & Soffen, LLP (hereinafter "Ostrolenk") to the firm of Dickstein Shapiro Morin & Oshinsky, LLP (hereinafter "Dickstein") on January 2, 2002. The original petition stated that subsequent to the change in firms, an employee of Dickstein, Mr. David Andres, picked up mail received for Mr.

4) a reference to the docket record in the practitioner's statement.

The request remains defective. In the latest submission, the declaration by Mr. Moskowitz and the accompanying docket records fail to encompass the time period around the period of the mailing of the Office action. Specifically, the "true copy of said docket records" from Ostrolenk appear to span the period of 01 June 2001 to 10 January 2002. As Mr. Weisburd has already stated in the previous petition that he joined Dickstein in January 2002, it is not surprising that the records of Ostrolenk would not reflect any communications after January 2002. The evidence submitted to date still has not overcome the presumption of receipt.

There remains the issue of the involvement of Morgan Stanley Mail Services because of the markings on the envelope. Mr. Moskowitz can only make the statement that "[t]o the best of my knowledge and belief, Morgan Stanley Mail Services has not had any operations at 1180 Avenue of the Americas during the period from January 1, 2002 to the current date." This statement does not reflect any knowledge other than that of a managing partner of Ostrolenk. It does not serve to establish anything other than what was in the personal knowledge of one person with no particular expertise in matters of mail delivery in an office complex in New York City.

Finally, there is the matter of Mr. Weisburd's failure to promptly notify the Office of his new correspondence address. All of the statements and evidence provided point to the fact that no address change was submitted until May 28, 2004, *two and a half years* after Mr. Weisburd departed Ostrolenk. Mr. Weisburd stated in the original petition that "[a]ny mail received for Mr. Weisburd at Ostrolenk was picked up by an employee of Dickstein and brought to the Dickstein docketing department" (see page 3 of original petition). Mr. Weisburd states that Ostrolenk "has not moved."

The resulting returned mail appears to have occurred because of factors involving mail delivery problems created either by the practitioner (for failure to properly and timely file a change of address request) or by persons other than employees of the US Postal Service. Therefore, the record submitted is not adequately probative of non-receipt. It is just as equally supportive of the likelihood of the Office communication going astray after receipt at the correspondence address of record.

The petition is **DENIED**.

The petitioner may wish to consider filing a petition to revive under 37 CFR § 1.137. Telephone inquiries should be directed to the Pinchus Laufer at (571) 272-3599.

Paul Sewell
Acting Director
Technology Center 2100
Computer Architecture, Software, and Information Security

UNITED STATES PATENT AND TRADEMARK OFFICE

COMMISSIONER FOR PATENTS
UNITED STATES PATENT AND TRADEMARK OFFICE
P.O. BOX 1450
ALEXANDRIA, VA 22313-1450
www.uspto.gov

MAIL

JUL 07 2004

DIRECTOR OFFICE
TECHNOLOGY CENTER 2100

Paper No. 6

Ostrolenk Faber Gerb & Soffen
1180 Avenue of the Americas
New York, NY 10036-8403

In re Application of: Ono	)	
Application No. 09/873,649	)	**DECISION ON PETITION TO**
Attorney Docket No. A3156.0022/PO22	)	**WITHDRAW HOLDING OF**
Filed: June 4, 2001	)	**ABANDONMENT UNDER 37 CFR**
For: INTEGRATED CIRCUIT FOR	)	**§1.181**
MODEM	)	

This is a decision on the petition, filed April 9, 2004, by Mr. Steven I. Weisburd requesting the Withdrawal of the Holding of Abandonment of the above-identified application. The petition is being considered under 37 CFR §1.181. This application was held abandoned for failure to respond to the Office action mailed September 23, 2003 (Paper No. 3). A Notice of Abandonment was mailed on March 31, 2004 (Paper No. 4).

Evidence in Support of Petition

In support of the petition, Mr. Weisburd has provided a declaration that the Office action was not received; that the practitioner filed a change of address "on or about February 6, 2002"; and that the practitioner became aware of the Office action when the examiner contacted the practitioner (date not specified). The petition further contains a statement from the practitioner that a search of the file jacket and the docket records indicates the Office action was not received. A copy of the Dickstein docket record has been included.

The petition states Mr. Weisburd transferred his practice from Ostrolenk Faber Gerb & Soffen, LLP (hereafter "Ostrolenk") to the firm of Dickstein Shapiro Morin & Oshinsky, LLP (hereafter "Dickstein") on January 2, 2002. Subsequent to the change in firms, an employee of Dickstein, Mr. David Andres, picked up mail received for Mr. Weisburd at Ostrolenk. A declaration by Ms. Henrietta Marron has also been included regarding the Dickstein docketing records.

Issues Involving Address Changes

Unraveling this file's address change and powers of attorney is complicated by the practitioners' use of a customer number. A review of the file jacket reveals an original declaration that set forth the address of record as

Ostrolenk, Faber, Gerb & Soffen, LLP
1180 Avenue of the Americas
New York, New York 10036-8403
Customer No. 2352

There is no evidence found relating to the filing of a change of address and Mr. Weisburd has not provided any additional proof of a change of address filed after January 2002. In addition, there

is no statement made relating to changes associated with the customer number for this application.

The following guidelines were set forth in the Official Gazette Notice, 1191 OG 187, "Extension of the Payor Number Practice (through 'Customer Numbers') to Matters Involving Pending Patent Applications" dated October 15, 1996.

> As the PTO will not recognize more than on correspondence address (37 CFR 1.34(c)), any inconsistencies between the correspondence address resulting from a Customer Number being provided in an application for the correspondence address and any other correspondence address provided in that application would be resolved in favor of the address of the Customer Number. Where an applicant appoints all of the practitioners associated with a Customer Number as well as a list of individually named practitioners such action would be treated as only an appointment of all of the practitioners associated with a Customer Number due to the potential for confusion and data entry errors in entering registration number from plural sources.

Essentially, it is reasonable to assume Mr. Weisburd could not correct the correspondence address via separate letter once the customer number was established for this application. Any changes to the correspondence address would need to be made by updating the customer number information.

The practitioner is invited to provide copies of the information submitted to the Office relating to the change of address and the customer number to determine whether the Office in fact made a mistake. Absent a showing by the practitioner that an Office error occurred in the the correspondence address associated with Customer Number 2352; the address is presumed to be correct, Mr. Weisburd's statements notwithstanding.

Issues involving Nonreceipt of Correspondence

All of this is still secondary as to the proof necessary set forth in MPEP §711.03(c), the showing required to establish nonreceipt of an Office action includes the following:

> *1) a statement from the practitioner that the Office action was not received,*
> *2) a statement from the practitioner that the file jacket and docket records were searched,*
> *3) a copy of the docket record **at the address of record**, and*
> *4) a reference to the docket record in the practitioner's statement.*
> [Emphasis added.]

The petition fails to fully comply with the requirements set forth above. Mr. Weisburd's evidence fails because it relates to matters involving the firm of Dickstein, while the Office action was mailed to Ostrolenk based upon the address associated with the customer number. Therefore, the evidence submitted to date has not overcome the presumption of receipt.

In fact, there is clear evidence the Office communication was, in fact, received at the address for Ostrolenk. The Office action of September 23, 2003 has been returned to the Office and has been found in the file wrapper. While this seems to confirm nonreceipt by the practitioner (see MPEP § 707.13), a close review of the returned envelope suggests the problem is not based upon an Office failure to use a proper address or upon a failure of the US Postal Service to deliver the communication. Rather, the markings on the envelope suggest that the Ostrolenk firm was employing the services of "Morgan Stanley Mail Services" ***who did not deliver the package to Ostrolenk*** because the "Addressee can not be located in the directory." The full label reads, "Mail Services received the attached item from your company. Please be informed that this item is being returned for the reason indicated below: [Box marked] Addressee can not be located in

directory. We are sorry for any inconvenience this may have caused. Your records should be updated to prevent future communications from being returned." Such a statement even suggests there was no reason to believe that the action would reach applicant with a remailing. Therefore, the evidence appears to confirm receipt, but not necessarily delivery to the address of record.

The practitioner may wish to consider providing proof of the filing of a change of address prior to the mailing of the September 23, 2003 communication. Such proof should include evidence that the customer number was being updated along with the address change and change in powers of attorney. In addition, the practitioner will need statements from the firm of Ostrolenk explaining mail delivery and the processing of mail by Morgan Stanley Mail Services at the time of the mailing of this Office communication in order to explain the nondelivery of the Office communication.

The petition is **DISMISSED**. Since the Office still does not have a proper change of address for Mr. Weisburd, this decision is being mailed to the Ostrolenk address with a courtesy copy being sent to Dickstein.

Petitioner is being granted an additional opportunity to resolve the issues raised in this decision within two (2) months of the mailing date of this decision. In the alternative, the petitioner may wish to consider filing a petition to revive under 37 CFR § 1.137. Telephone inquiries should be directed to the undersigned at (703) 308-0269.

Josie A. Ballato
Special Programs Examiner
Technology Center 2100
Computer Architecture, Software, and Information Security

CC: Steven I. Weisburd
Dickstein Shapiro Morin & Oshinsky LLP
1177 Avenue of the Americas – 41st Floor
New York, New York 10036-2714

UNITED STATES PATENT AND TRADEMARK OFFICE

Commissioner for Patents
United States Patent and Trademark Office
P.O. Box 1450
Alexandria, VA 22313-1450
www.uspto.gov

Paper No. 13

Dickstein Shapiro Morin & Oshinsky, LLP
1177 Avenue of the Americas
New York, New York 10036-2714

MAILED

AUG 3 0 2005

Technology Center 2100

In re Application of: Mitsuhiro Ono	)	
Application No.: 09/873,649	)	**DECISION ON PETITION**
Filed: Ojune 4, 2001	)	**UNDER 37 CFR §1.181 TO**
For: INTEGRATED CIRCUIT FOR	)	**WITHDRAW HOLDING OF**
MODEM	)	**ABANDONMENT**

This is a decision in response to the request for reconsideration, filed August 15, 2005, of the decision on petition mailed July 7, 2005 denying a request for withdrawal of the holding of abandonment.

The petition is **GRANTED**.

This application was held abandoned for failure to timely respond to the Office communication mailed September 23, 2003. A Notice of Abandonment was mailed on March 31, 2004.

In the absence of any apparent irregularity associated with the mailing of an Office communication, the Office may presume that the communication was properly mailed to the address of record. This presumption may be overcome by showing that the Office communication was not received.

M.P.E.P. § 711.03(c), section II states:

> The showing required to establish nonreceipt of an Office communication must include a statement from the practitioner stating that the Office communication was not received by the practitioner and attesting to the fact that a search of the file jacket and docket records indicates that the Office communication was not received. A copy of the docket record where the nonreceived Office communication would have been entered had it been received and docketed must be attached to and referenced in practitioner's statement. For example, if a three month period for reply was set in the nonreceived Office action, a copy of the docket report showing all replies docketed for a date three months from the mail date of the nonreceived Office action must be submitted as documentary proof of nonreceipt of the Office action. See Notice entitled "Withdrawing the Holding of Abandonment When Office Actions Are Not Received," 1156 O.G. 53 (November 16, 1993).

The previous petitions were denied because it was not clear that the docket records provided would have reflected incoming correspondence for this application at the relevant time period.

In support of the request for reconsideration, Applicant's attorney, Steven I. Weisburd, attests that although he had changed affiliation, the docket record remained open at Ostrolenk and that this is where the record would have been entered in the firm's docketing system had the Office action been received and docketed.

Petitioner has met the criteria of set out in MPEP 711.03(c) for establishing failure to receive an Office action. The petition is **GRANTED**. The Notice of Abandonment is **WITHDRAWN**.

The application is being forwarded to the Technology Center support staff to remail the Office communication, originally mailed September 23, 2003 with the two month shortened statutory period restarted to run from the date of the remailing.

Any inquiries with respect to this decision may be addressed to Pinchus M. Laufer at (571) 272-3599.

Paul Sewell
Acting Director
Technology Center 2100
Computer Architecture, Software, and Information Security
(571) 272-3599

Under the Paperwork Reduction Act of 1995, no persons are required to respond to a collection of information unless it displays valid OMB control number.

PETITION TO ACCEPT UNINTENTIONALLY DELAYED PAYMENT OF MAINTENANCE FEE IN AN EXPIRED PATENT (37 CFR 1.378(c))

Patent Number	Issue Date (YYYY-MM-DD)	Application Number	Filing Date (YYYY-MM-DD)	Docket Number (if applicable)
6,709,380	2004-03-23	09/873,666	2001-05-31	320528918

CAUTION: Maintenance fee (and surcharge, if any) payment must correctly identify: (1) the patent number and (2) the application number of the actual U.S. application leading to issuance of that patent to ensure the fee(s) is/are associated with the correct patent. 37 CFR 1.366(c) and (d).

SMALL ENTITY
☐ Patentee claims, or has previously claimed, small entity status. See 37 CFR 1.27.

LOSS OF ENTITLEMENT TO SMALL ENTITY STATUS
☐ Patentee is no longer entitled to small entity status. See 37 CFR 1.27(g)

NOT Small Entity		Small Entity	
Fee	Code	Fee	Code
◉ 3 ½ year	(1551)	○ 3 ½ year	(2551)
○ 7 ½ year	(1552)	○ 7 ½ year	(2552)
○ 11 ½ year	(1553)	○ 11 ½ year	(2553)

SURCHARGE
The surcharge required by 37 CFR 1.20(i)(2) (Fee Code 1558) must be paid as a condition of accepting unintentionally delayed payment of the maintenance fee.

MAINTENANCE FEE (37 CFR 1.20(e)-(g))
The appropriate maintenance fee must be submitted with this petition.

STATEMENT
THE UNDERSIGNED CERTIFIES THAT THE DELAY IN PAYMENT OF THE MAINTENANCE FEE TO THIS PATENT WAS UNINTENTIONAL

PETITIONER(S) REQUEST THAT THE DELAYED PAYMENT OF THE MAINTENANCE FEE BE ACCEPTED AND THE PATENT REINSTATED

THIS PORTION MUST BE COMPLETED BY THE SIGNATORY OR SIGNATORIES

37 CFR 1.378(d) states: "Any petition under this section must be signed by an attorney or agent registered to practice before the Patent and Trademark Office, or by the patentee, the assignee, or other party in interest."

I certify, in accordance with 37 CFR 1.4(d)(4) that I am

◉ An attorney or agent registered to practice before the Patent and Trademark Office

○ A sole patentee

○ A joint patentee; I certify that I am authorized to sign this submission on behalf of all the other patentees.

○ A joint patentee; all of whom are signing this e-petition

○ The assignee of record of the entire interest

Patent Practitioner			
A signature of the applicant or representative is required in accordance with 37 CFR 1.33 and 10.18. Please see 37 CFR 1.4(d) for the form of the signature			
Signature	/Robert G. Woolston/	Date (YYYY-MM-DD)	2008-06-26
Name	Robert G. Woolston	Registration Number	37263

This collection of information is required by 37 CFR 1.378(c). The information is required to obtain or retain a benefit by the public which is to file (and by the USPTO to process) an application. Confidentiality is governed by 35 U.S.C. 122 and 37 CFR 1.11 and 1.14. This collection is estimated to take 1 hour to complete, including gathering, preparing, and submitting the completed application form to the USPTO. Time will vary depending upon the individual case. Any comments on the amount of time you require to complete this form and/ or suggestions for reducing this burden, should be sent to the Chief Information Officer, U.S. Patent and Trademark Office, U.S. Department of Commerce, P.O. Box 1450, Alexandria, VA 22313-1450. DO NOT SEND FEES OR COMPLETED FORMS TO THIS ADDRESS. **This form can only be used when in conjunction with EFS-Web. If this form is mailed to the USPTO, it may cause delays in reinstating the patent.**

Privacy Act Statement

The Privacy Act of 1974 (P.L. 93-579) requires that you be given certain information in connection with your submission of the attached form related to a patent application or patent. Accordingly, pursuant to the requirements of the Act, please be advised that: (1) the general authority for the collection of this information is 35 U.S.C. 2(b)(2); (2) furnishing of the information solicited is voluntary; and (3) the principal purpose for which the information is used by the U.S. Patent and Trademark Office is to process and/or examine your submission related to a patent application or patent. If you do not furnish the requested information, the U.S. Patent and Trademark Office may not be able to process and/or examine your submission, which may result in termination of proceedings or abandonment of the application or expiration of the patent.

The information provided by you in this form will be subject to the following routine uses:

1. The information on this form will be treated confidentially to the extent allowed under the Freedom of Information Act (5 U.S.C. 552) and the Privacy Act (5 U.S.C. 552a). Records from this system of records may be disclosed to the Department of Justice to determine whether the Freedom of Information Act requires disclosure of these record s.

2. A record from this system of records may be disclosed, as a routine use, in the course of presenting evidence to a court, magistrate, or administrative tribunal, including disclosures to opposing counsel in the course of settlement negotiations.

3. A record in this system of records may be disclosed, as a routine use, to a Member of Congress submitting a request involving an individual, to whom the record pertains, when the individual has requested assistance from the Member with respect to the subject matter of the record.

4. A record in this system of records may be disclosed, as a routine use, to a contractor of the Agency having need for the information in order to perform a contract. Recipients of information shall be required to comply with the requirements of the Privacy Act of 1974, as amended, pursuant to 5 U.S.C. 552a(m).

5. A record related to an International Application filed under the Patent Cooperation Treaty in this system of records may be disclosed, as a routine use, to the International Bureau of the World Intellectual Property Organization, pursuant to the Patent Cooperation Treaty.

6. A record in this system of records may be disclosed, as a routine use, to another federal agency for purposes of National Security review (35 U.S.C. 181) and for review pursuant to the Atomic Energy Act (42 U.S.C. 218(c)).

7. A record from this system of records may be disclosed, as a routine use, to the Administrator, General Services, or his/her designee, during an inspection of records conducted by GSA as part of that agency's responsibility to recommend improvements in records management practices and programs, under authority of 44 U.S.C. 2904 and 2906. Such disclosure shall be made in accordance with the GSA regulations governing inspection of records for this purpose, and any other relevant (i.e., GSA or Commerce) directive. Such disclosure shall not be used to make determinations about individuals.

8. A record from this system of records may be disclosed, as a routine use, to the public after either publication of the application pursuant to 35 U.S.C. 122(b) or issuance of a patent pursuant to 35 U.S.C. 151. Further, a record may be disclosed, subject to the limitations of 37 CFR 1.14, as a routine use, to the public if the record was filed in an application which became abandoned or in which the proceedings were terminated and which application is referenced by either a published application, an application open to public inspections or an issued patent.

9. A record from this system of records may be disclosed, as a routine use, to a Federal, State, or local law enforcement agency, if the USPTO becomes aware of a violation or potential violation of law or regulation.

UNITED STATES PATENT AND TRADEMARK OFFICE

Commissioner for Patents
United States Patent and Trademark Office
P.O. Box 1450
Alexandria, VA 22313-1450
www.uspto.gov

In re Patent No. 6709380
Issue Date: March 23,2004
Application No. 09873666
Filed: May 31,2001
Attorney Docket No. NEO-005

:

:DECISION GRANTING PETITION
:UNDER 37 CFR 1.378(c)

:

This is a decision on the electronic petition, filed June 26,2008 ,under 37 CFR 1.378(c) to accept the unintentionally delayed payment of the 3.5 year maintenance fee for the above-identified patent.

The petition is GRANTED.

The maintenance fee is accepted, and the above-identified patent reinstated as of June 26,2008 . This decision also constitutes notice that the fee has been accepted. An electronic copy of the petition and this decision has been created as an entry in an Image File Wrapper. Nevertheless, petitioner should print and retain an independent copy

Telephone inquires related to this electronic decision should be directed to the Electronic Business Center at 1-866-217-9197.

UNITED STATES PATENT AND TRADEMARK OFFICE

COMMISSIONER FOR PATENTS
UNITED STATES PATENT AND TRADEMARK OFFICE
WASHINGTON, DC 20231
www.uspto.gov

Paper No. 7

JOHN S. PRATT, ESQ.
KILPATRICK STOCKTON LLP
1100 PEACHTREE STREET
SUITE 2800
ATLANTA GA 30309

MAILED

MAR 2 5 2003

Technology Center 2600

In re Application of:
Lanny Gilbert
Application No. 09/873,709
Filed: June 4, 2001
For: **SYSTEMS AND METHODS FOR SETTING FUTURE TELECONFERENCE CALLS**

ON PETITION

This is a decision on the request filed November 20, 2002, to withdraw the holding of abandonment. No fee is required.

The Notice of Abandonment was mailed July 3, 2002 because of a letter of express abandonment.

Petitioner alleges that no such letter of express abandonment has been submitted in this application. A review of the file record indicates that the petitioner is correct. The letter of express abandonment in the file belongs to the parent of the present application and was entered in the instant file in error.

Accordingly, the petition is **GRANTED**.

The Notice of Abandonment is hereby vacated and the holding of abandonment withdrawn. The application file will be forwarded to the TC 2600 Central File and will await further action from examiner.

Jin F. Ng, Director
Technology Center 2600
Communications

UNITED STATES PATENT AND TRADEMARK OFFICE

Commissioner for Patents
United States Patent and Trademark Office
P.O. Box 1450
Alexandria, VA 22313-1450
www.uspto.gov

ROSS PRODUCTS DIVISION OF ABBOTT
LABORATORIES
DEPARTMENT 108140-DS/1
625 CLEVELAND AVENUE
COLUMBUS, OH 43215-1724

COPY MAILED

AUG 1 0 2005

OFFICE OF PETITIONS

In re Application of :
Kenneth M. Phillips et al :
Application No. 09/873,751 :
Filed: June 4, 2001 :
Attorney Docket No. 6807US01 :

ON PETITION

This is a decision on the petition under 37 CFR 1.137(b), filed June 24, 2005, to revive the above-identified application.

The petition is **GRANTED**.

The above-identified application became abandoned for failure to reply in a timely manner to the non-final Office action mailed June 17, 2004, which set a shortened statutory period for reply of three (3) months. No extension of time under the provisions of 37 CFR 1.136(a) were obtained. Accordingly, the above-identified application became abandoned on September 18, 2004.

Telephone inquiries concerning this decision should be directed to Irvin Dingle at (571) 272-3210.

This matter is being referred to Technology Center AU 1623 for further processing.

Irvin Dingle
Petitions Examiner
Office of Petitions
Office of the Deputy Commissioner
for Patent Examination Policy

UNITED STATES PATENT AND TRADEMARK OFFICE

Commissioner for Patents
United States Patent and Trademark Office
P.O. Box 1450
Alexandria, VA 22313-1450
www.uspto.gov

NELSON MULLINS RILEY & SCARBOROUGH
1320 MAIN STREET, 17TH FLOOR
COLUMBIA, SC 29201

COPY MAILED

JUL 28 2005

OFFICE OF PETITIONS

In re Application of	:	
Joseph E. Johnson	:	
Application No. 09/873,768	:	ON PETITION
Filed: June 4, 2001	:	
Attorney Docket No. 16627/09000	:	

This is a decision on the petition under 37 CFR 1.137(b), filed July 8, 2005, to revive the above-identified application.

The petition is **GRANTED**.

The above-identified application became abandoned for failure to reply in a timely manner to the non-final Office action mailed April 20, 2004, which set a shortened statutory period for reply of three (3) months. No extensions of time under the provisions of 37 CFR 1.136(a) were obtained. Accordingly, the above-identified application became abandoned on July 21, 2004.

An extension of time under 37 CFR 1.136 must be filed prior to the expiration of the maximum extendable period for reply. See In re Application of S., 8 USPQ2d 1630, 1631 (Comm'r Pats. 1988). Accordingly, since the $510 extension of time submitted with the petition on July 8, 2005 was subsequent to the maximum extendable period for reply, this fee is unnecessary and will be credited to petitioner's deposit account.

Telephone inquiries concerning this decision should be directed to Wan Laymon at (571) 272-3220.

This matter is being referred to Technology Center AU 2191.

Wan Laymon
Petitions Examiner
Office of Petitions
Office of the Deputy Commissioner
for Patent Examination Policy

COMMISSIONER FOR PATENTS
UNITED STATES PATENT AND TRADEMARK OFFICE
WASHINGTON, D.C. 20231
www.uspto.gov

Paper No. 9

KLAUBER & JACKSON
411 HACKENSACK AVENUE
HACKENSACK NJ 07601

COPY MAILED

AUG 0 6 2002

OFFICE OF PETITIONS

In re Application of		
Choi, et al.		
Application No.	09/873,829	DECISION ON PETITION
Filed:	June 4, 2001	
Attorney Docket No.	040144.05	

This is a decision on the "Petition and Response to Notice of Omitted Items(s) in a Nonprovisional Application and Request for Inclusion of Omitted Item(s), filed May 9, 2002, in response to the "Notice of Omitted Items in Nonprovisional Application (the 'Notice").

The petition is **dismissed**.

Any request for reconsideration of this decision must be submitted within two (2) months from the mail date of this decision. Extensions of time under 37 CFR 1.136(a) are permitted. The reconsideration request should include a cover letter entitled "Renewed Petition under 37 CFR 1.182." This is not a final agency decision.

The application was filed on June 4, 2001. The Notice, mailed March 14, 2002, indicated that the application had been granted a filing date, but stated that pages 119 of the specification appeared to have been omitted from the application.

The Notice permits applicant to either: (1) promptly establish prior receipt in the Office of the items at issue (generally by way of a date-stamped postcard receipt (MPEP 503)), or (2) promptly submit the omitted items and accept the date of such submission as the application filing date. An applicant asserting that the missing items were in fact deposited in the Office with the application papers must file a petition (and the appropriate petition fee) with evidence of such deposit. An applicant desiring to submit the omitted items in a nonprovisional application and accept the date of such submission as the application filing date must file any omitted items with an oath or declaration in compliance with 37 CFR 1.63 and 1.64 referring to such omitted items and a petition under 37 CFR 1.182 (with the petition fee under 37 CFR 1.17(h) requesting the later filing date within two months of the date of the Notice (37 CFR 1.181(f)).

As evidence that page 119 of the specification was filed on June 4, 2001, petitioner indicates that a copy of an Office date-stamped postcard receipt showing receipt of 130 pages of specification was enclosed with the instant petition. A review of the application file revealed no such copy of the evidentiary postcard receipt. Petitioner further asserts, however, that application filed June 4, 2001, included a transmittal sheet that identified the above-cited application as a continuation application of application No. 09/210,115 and specifically incorporated by reference the entire disclosure of the prior application.

An applicant may incorporate by reference the prior application by including in the application-as-filed, a statement that such specifically enumerated prior application or application are "hereby incorporated by reference." The statement may appear in the specification or in the application transmittal letter. The inclusion of this incorporation by reference of the prior applications(s) will permit an applicant to amend the continuation application to include any subject matter in such prior application(s), without the need for a petition. See MPEP 201.06(c).

In view of the incorporation by reference of the prior application, page 119 is not new matter if they were a part of the disclosure of the prior application.

The application is being returned to the Office of Initial Patent Examination for further processing with a filing date of June 4, 2001.

Thereafter, the application will be forwarded to the appropriate group art unit for consideration by the examiner of the petition filed May 9, 2002, as a supplemental preliminary amendment requesting entry of page 119 of the specification.

Further correspondence with respect to this matter should be addressed as follows:

By mail: Commissioner of Patents and Trademarks
Box DAC
Washington, DC 20231

By FAX: (703) 308-6916
Attn: Office of Petitions

By Hand: Office of Petitions
Crystal Plaza 4, 3C23
2201 South Clark Place
Arlington, VA 22202

Telephone inquiries should be directed to Kenya A. McLaughlin, Petitions Attorney, at (703) 305-0010.

Beverly M. Flanagan
Supervisory Petitions Examiner
Office of Petitions
Office of the Deputy Commissioner
for Patent Examination Policy

UNITED STATES PATENT AND TRADEMARK OFFICE

COMMISSIONER FOR PATENTS
UNITED STATES PATENT AND TRADEMARK OFFICE
P.O. BOX 1450
ALEXANDRIA, VA 22313-1450
www.uspto.gov

MAIL

FEB 0 9 2004

DIRECTOR OFFICE
TECHNOLOGY CENTER 2100

Paper No. 4

David L. McCombs
HAYNES AND BOONE LLP
Suite 3100
901 Main Street
Dallas, TX 75202-3789

In re Application of:
Jabri
Application No. 09/873,830
Filed: June 4, 2001
For: METHOD AND SYSTEM FOR DEVELOPING AND EXECUTING SOFTWARE APPLICATIONS AT AN ABSTRACT DESIGN LEVEL

DECISION ON REQUEST FOR WITHDRAWAL AS ATTORNEY

This is a decision on the Request To Withdraw from Representation filed December 29, 2003.

A grantable request to withdraw as attorney of record should indicate thereon the present mailing addresses of the attorney(s) who is/are withdrawing from the record and of the applicant. The request for withdrawal must be signed by every attorney seeking to withdraw or contain a clear indication that one attorney is signing on behalf of another/others. A request to withdraw will not be approved unless at least 30 (thirty) days would remain between the date of approval and the later of the expiration date of a time to file a response or the expiration date of the maximum time period which can be extended under 37 C.F.R. § 1. 136(a). The effective date of withdrawal being the date of decision and not the date of request. See M.P.E.P. § 402.06. **37 C.F.R. § 1.36 further requires that the applicant or patent owner be notified of the withdrawal of the attorney or agent**.

There is no indication that Applicant has been notified of the request for withdrawal.

Accordingly, the request is **DENIED**.

All future communications from the United States Patent and Trademark Office (Office) will continue to be directed to the above-listed address until otherwise notified by applicant. Applicant is reminded of the obligation to promptly notify the Office of any change in correspondence address to ensure receipt of all communications from the Office.

for James R. Matthews
Vincent N. Trans
Special Programs Examiner
Technology Center 2100
Computer Architecture and Software
(703)305-9750

UNITED STATES PATENT AND TRADEMARK OFFICE

COMMISSIONER FOR PATENTS
UNITED STATES PATENT AND TRADEMARK OFFICE
P.O. BOX 1450
ALEXANDRIA, VA 22313-1450
www.uspto.gov

Paper No. 6

MAIL

MAR 2 3 2004

DIRECTOR OFFICE
TECHNOLOGY CENTER 2100

HAYNES AND BOONE, LLP
901 Main Street, Suite 3100
Dallas, Texas 75202-3789

In re Application of:
Mohamed I. JABRI
Application No. 09/873,830
Filed: June 4, 2001
For: METHOD AND SYSTEM FOR DEVELOPING AND EXECUTING SOFTWARE APPLICATIONS AT AN ABSTRACT DESIGN LEVEL

DECISION ON REQUEST TO WITHDRAW AS ATTORNEY OR AGENT

This is a decision on the Request to Withdraw from Representation filed February 27, 2004.

A grantable request to withdraw as attorney of record should indicate thereon the present mailing addresses of the attorney(s) who is/are withdrawing from the record and of the applicant. The request for withdrawal must be signed by every attorney seeking to withdraw or contain a clear indication that one attorney is signing on behalf of another/others. A request to withdraw will not be approved unless at least 30 (thirty) days would remain between the date of approval and the later of the expiration date of a time to file a response or the expiration date of the maximum time period which can be extended under 37 C.F.R. § 1.136(a). The effective date of withdrawal being the date of decision and not the date of request. See M.P.E.P. § 402.06. 37 C.F.R. § 1.36 further requires that the applicant or patent owner be notified of the withdrawal of the attorney or agent.

The request is **GRANTED.**

All future communications from the Office will be directed to the below-listed address until otherwise notified by applicant. This correspondence address is provided by the withdrawn attorney(s). Applicant is reminded of the obligation to promptly notify the Patent and Trademark Office (Office) of any change in correspondence address to ensure receipt of all communications from the Office.

Vincent N. Trans
Special Program Examiner
Technology Center 2100
Computer Architecture, Software, and
Information Security
703-305-9750

cc: Mr. Iyad Jabri
Intellium Corporation
555 Republic Drive, Suite 109
Plano, Texas 75074

UNITED STATES PATENT AND TRADEMARK OFFICE

Commissioner for Patents
United States Patent and Trademark Office
P.O. Box 1450
Alexandria, VA 22313-1450
www.uspto.gov

IYAD JABRI, INTELLIUN
5800 GRANITE PARKWAY
#300
PLANO, TX 75024

COPY MAILED
NOV 02 2005
OFFICE OF PETITIONS

In re Application of :
Mohamed I. Jabri :
Application No. 09/873,830 :
Filed: June 4, 2001 :
Title of Invention: :
METHOD AND SYSTEM FOR :
DEVELOPING AND EXECUTING :
SOFTWARE APPLICATIONS AT AN :
ABSTRACT DESIGN LEVEL :

This is a decision on the petition under 37 CFR 1.137(b), filed October 2, 2005, to revive the above-identified application.

The petition is **DISMISSED**.

Any further petition to revive the above-identified application (under 37 CFR 1.137(a)), must be submitted within TWO (2) MONTHS from the mail date of this decision. Extensions of time under 37 CFR 1.136(a) are permitted. The reconsideration request should include a cover letter entitled "Request for Reconsideration of Petition under 37 CFR 1.137. This is **not** final agency action within the meaning of 5 U.S.C. § 704.

The above-identified application became abandoned for failure to timely reply to the non-final Office action, mailed December 14, 2004. The Notice set a statutory period for reply of three (3) months. Extensions of time under 37 CFR 1.136(a) were available. No reply having been received, the above-identified application became abandoned March 15, 2005. A Notice of Abandonment was mailed on August 25, 2005.

Applicant files the instant petition, and therein avers that a reply is enclosed. However, a review of the papers filed on October 2, 2005, reveal that no reply to the December 14, 2004 Office action has been included.

A further review of the petition papers reveals that the petition is unexecuted. Applicant has used PTO form PYTO/SB/64, but the second page of the form that contains a signature block is missing from the petition papers.

Before the petition may be addressed, the petition must be executed by a proper party in interest. A proper party in interest would be the inventor, an Assignee[1], or a representative of the inventor licensed to practice before the PTO.

Applicant is also advised that a grantable petition to revive an abandoned application under 37 CFR 1.137(b) must be accompanied by: (**1**) the required reply (unless previously filed); (**2**) the petition fee required by 37 CFR 1.17(m); (**3**) a statement that the entire delay in filing the required reply from the due date for the reply until the filing of a grantable petition pursuant to 37 CFR 1.137(b) was unintentional; and (**4**) if required, a terminal disclaimer (and fee as set forth in 37 CFR 1.20(d)). Applicant lacks item (**1**).

As to item (**1**), Applicant has not submitted a reply to the December 14, 2004 Office action. Applicant must submit a reply to the Office action as part of the requirement for granting a petition under 37 CFR 1.137(b).

Further correspondence with respect to this matter should be addressed as follows:

By mail: Commissioner for Patents
PO Box 1450
Alexandria, VA 22313-1450

By FAX: (703) 872-9306
Attn: Office of Petitions

By hand: 2201 South Clark Place
Customer Window
Crystal Plaza Two, Lobby Room 1B03
Arlington, VA 22202

---

[1] Before an Assignee is able to act in an application, the proper documentation evidencing an assignment and a statement under 37 CFR 3.73 must be filed.

Telephone inquiries concerning this decision should be directed to the undersigned at 703-305-0014.

Derek L. Woods
PAttorney
Office of Petitions

UNITED STATES PATENT AND TRADEMARK OFFICE

COMMISSIONER FOR PATENTS
UNITED STATES PATENT AND TRADEMARK OFFICE
P.O. BOX 1450
ALEXANDRIA, VA 22313-1450
www.uspto.gov

IYAD JABRI, INTELLIUN
5800 GRANITE PARKWAY
#300
PLANO, TX 75024

COPY MAILED

MAR 22 2006

OFFICE OF PETITIONS

In re Application of :
Mohamed I. Jabri :
Application No. 09/873,830 :
Filed: June 4, 2001 :
Title of Invention: :
METHOD AND SYSTEM FOR :
DEVELOPING AND EXECUTING :
SOFTWARE APPLICATIONS AT AN :
ABSTRACT DESIGN LEVEL :

This is a decision on the petition under 37 CFR 1.137(b), filed October 2, 2005, to revive the above-identified application.

The petition is **DISMISSED**.

Any further petition to revive the above-identified application (under 37 CFR 1.137(a)), must be submitted within TWO (2) MONTHS from the mail date of this decision. Extensions of time under 37 CFR 1.136(a) are permitted. The reconsideration request should include a cover letter entitled "Request for Reconsideration of Petition under 37 CFR 1.137. This is **not** final agency action within the meaning of 5 U.S.C. § 704.

The above-identified application became abandoned for failure to timely reply to the non-final Office action, mailed December 14, 2004. The Notice set a statutory period for reply of three (3) months. Extensions of time under 37 CFR 1.136(a) were available. No reply having been received, the above-identified application became abandoned March 15, 2005. A Notice of Abandonment was mailed on August 25, 2005.

Applicant filed a petition to revive under 37 CFR 1.137(b) on October 2, 2005, wherein Applicant asserted that a reply was enclosed. However, a review of the papers filed on October 2, 2005, revealed that no reply to the December 14, 2004 Office action had been included.

A further review of the petition papers revealed that the petition was unexecuted. Applicant had used PTO form PYTO/SB/64, but the second page of the form that contains a signature block was missing from the petition papers.

The petition was dismissed in a Decision mailed November 2, 2005. Applicant was advised that, before the petition may be addressed, the petition must be executed by a proper party in interest. Applicant was also advised that he had not submitted a reply to the December 14, 2004 Office action. Applicant was informed that he must submit a reply to the Office action as part of the requirement for granting a petition under 37 CFR 1.137(b).

The instant petition

Applicant files the instant petition and provides that 1) the last page of the October 2, 2005 petition apparently did not go through the fax correctly. Applicant also provides that they had not received the Office action until recently, and now file the fee for a three (3) month extension of time in order to prepare a proper reply to the Office action. No reply to the Office action has been included with the petition or extension of time fees.

A grantable petition to revive an abandoned application under 37 CFR 1.137(b) must be accompanied by: (**1**) the required reply (unless previously filed); (**2**) the petition fee required by 37 CFR 1.17(m); (**3**) a statement that the entire delay in filing the required reply from the due date for the reply until the filing of a grantable petition pursuant to 37 CFR 1.137(b) was unintentional; and (**4**) if required, a terminal disclaimer (and fee as set forth in 37 CFR 1.20(d)). Applicant lacks item (**1**).

As to item (**1**), Applicant has not submitted a reply to the December 14, 2004 Office action. Applicant must submit a reply to the Office action as part of the requirement for granting a petition under 37 CFR 1.137(b).

Regarding the extension of time, Applicant is advised that the necesary extension of time should be filed with the reply to the Office action.

Applicant is further advised to contact the Office of Independent Inventors, at 703-306-5568, and the Patent Assistance Center, at 1-800-786-9199, for assistance in prosecuting his patent application.

Further correspondence with respect to this matter should be addressed as follows:

By mail: Commissioner for Patents
PO Box 1450
Alexandria, VA 22313-1450

By FAX: (703) 872-9306
Attn: Office of Petitions

By hand: 2201 South Clark Place
Customer Window
Crystal Plaza Two, Lobby Room 1B03
Arlington, VA 22202

Telephone inquiries concerning this decision should be directed to the undersigned at 703-305-0014.

Derek L. Woods
Attorney
Office of Petitions

UNITED STATES PATENT AND TRADEMARK OFFICE

Commissioner for Patents
United States Patent and Trademark Office
P.O. Box 1450
Alexandria, VA 22313-1450
www.uspto.gov

IYAD JABRI, INTELLIUN
5800 GRANITE PARKWAY # 300
PLANO TX 75024

COPY MAILED

MAR 19 2007

OFFICE OF PETITIONS

ON PETITION

In re Application of
Mohamed I. Jabri
Application No. 09/873830
Filing or 371(c) Date: 06/04/2001
Title of Invention: METHOD AND SYSTEM FOR DEVELOPING AND EXECUTING SOFTWARE APPLICATIONS AT AN ABSTRACT DESIGN LEVEL

This is a decision on the third petition to revive the application under 37 CFR 1.137(b), filed November 6, 2006, to revive the above-identified application. The delay in treating this petition is regretted.

This Petition is hereby **dismissed**.

Any further petition to revive the above-identified application must be submitted within TWO (2) MONTHS from the mail date of this decision. Extensions of time under 37 CFR 1.136(a) are permitted. The reconsideration request should include a cover letter entitled "Request for Reconsideration of Petition under [insert the applicable code section]". This is **not** final agency action within the meaning of 5 U.S.C. § 704.

Background

The above-identified application became abandoned for failure to timely and properly reply to the non-final Office action, mailed December 14, 2004. The Office action set a three (3) month period for reply from the mail date of the Office action. Extensions of time were available under 37 CFR 1.136(a). No reply having been received, the application became abandoned on March 15, 2005. A Notice of Abandonment was mailed August 25, 2005.

The October 2, 2005 petition

Applicant filed a petition to revive the application on October 2, 2005, that was dismissed in a Decision mailed November 2, 2005, because the petition had not been executed by a proper party in interest.

The second petition

Applicant filed a second petition on December 30, 2005; January 3, 2006; January 26, 2006 and February 1, 2006, which was dismissed in a Decision mailed March 22, 2006, because a reply to the December 14, 2004 Office action had not been filed.

The present petition

Applicant files the present petition and a new petition fee; however, no reply to the Office action has been filed.

Applicable law

As provided in 37 CFR 1.137(b):

> A grantable petition pursuant to this paragraph must be accompanied by:
> (1) The reply required to the outstanding Office action or notice, unless previously filed;
> (2) The petition fee as set forth in § 1.17(m);
> (3) A statement that the entire delay in filing the required reply from the due date for the reply until the filing of a grantable petition pursuant to this paragraph was unintentional. The Director may require additional information where there is a question whether the delay was unintentional; and (4) Any terminal disclaimer (and fee as set forth in § 1.20(d)) required pursuant to paragraph (d) of this section.

The required reply may be met by the filing of a continuing application. In a nonprovisional utility or plant application filed on or after June 8, 1995, and abandoned for failure to prosecute, the required reply may also be met by the filing of a request for continued examination in compliance with § 1.114. In an application or patent, abandoned or lapsed for failure to pay the issue fee or any portion thereof, the required reply must include payment of the issue fee or any outstanding balance. In an application, abandoned for failure to pay the publication fee, the required reply must include payment of the publication fee.

Analysis and conclusion

Applicant has again failed to file a reply to the outstanding Office action. The petition is dismissed.

It is noted that the petition is signed by a registered practitioner. As such, the petition is dismissed without prejudice. Applicant may file a request for reconsideration of petition and include the necessary reply.

It is also noted that the application file does not indicate a change of address has been filed in this case, although the address given on the petition differs from the address of record. A change of address should be filed in this case in accordance with MPEP 601.03. A courtesy copy of this decision is being mailed to the address noted on the petition. However, until otherwise instructed, all future correspondence regarding this application will be mailed solely to the address of record.

Finally, there is no fee for a petition for reconsideration. A refund of the petition fee may be obtained by writing to the Office of finance: Refund Section. A copy of this Decision should accompany the request.

Further correspondence with respect to this matter should be addressed as follows:

By mail: Director for Patents
PO Box 1450
Alexandria, VA 22313-1450

By FAX: (571) 273-8300
Attn: Office of Petitions

By hand: Customer Service Window
Randolph Building
401 Dulany Street
Alexandria, VA 22314

Telephone inquiries concerning this petition Decision should be directed to the undersigned at (571) 272-3232.

Derek L. Woods
Attorney
Office of Petitions

CC: RAFFI GOSTANIAN
1103 TWIN CREEKS, STE. 120
ALLEN, TX 75013

UNITED STATES PATENT AND TRADEMARK OFFICE

Commissioner for Patents
United States Patent and Trademark Office
P.O. Box 1450
Alexandria, VA 22313-1450
www.uspto.gov

IYAD JABRI, INTELLIUN
5800 GRANITE PARKWAY # 300
PLANO TX 75024

COPY MAILED

JUL 11 2007

OFFICE OF PETITIONS

In re Application of	:	
Mohamed I. Jabri	:	
Application No. 09/873830	:	
Filing or 371(c) Date: 06/04/2001	:	ON PETITION
Title of Invention: METHOD AND	:	
SYSTEM FOR DEVELOPING AND	:	
EXECUTING SOFTWARE	:	
APPLICATIONS AT AN ABSTRACT	:	
DESIGN LEVEL	:	

This is a decision on the third petition to revive the application under 37 CFR 1.137(b), filed November 6, 2006, to revive the above-identified application. The delay in treating this petition is regretted.

This Petition is hereby **granted**.

Background

The above-identified application became abandoned for failure to timely and properly reply to the non-final Office action, mailed December 14, 2004. The Office action set a three (3) month period for reply from the mail date of the Office action. Extensions of time were available under 37 CFR 1.136(a). No reply having been received, the application became abandoned on March 15, 2005. A Notice of Abandonment was mailed August 25, 2005.

Applicant filed a petition to revive the application on October 2, 2005, that was dismissed in a Decision mailed November 2, 2005, because the petition had not been executed by a proper party in interest.

Applicant filed a second petition on December 30, 2005; January 3, 2006; January 26, 2006 and February 1, 2006, which was dismissed in a Decision mailed March 22, 2006, because a reply to the December 14, 2004 Office action had not been filed.

Applicant filed a third petition to revive the application under 37 CFR 1.137(b) on November 6, 2006, this time the petition was executed by a registered practitioner; however, again no reply to the Office action was filed. The petition was again dismissed without prejudice.

The present petition

Applicant files the present petition and includes an Amendment in response to the Office action. The petition satisfies the conditions for revival pursuant to the provisions of 37 CFR 1.137(b) in that (1) the reply in the form of an Amendment is filed with the present petition; (2) the petition fee (previously submitted); and (3) the required statement of unintentional delay (previously submitted[1]). Accordingly, the reply is accepted as having been unintentionally delayed.

The application file does not indicate a change of address has been filed in this case, although the address given on the petition differs from the address of record. A change of address should be filed in this case in accordance with MPEP 601.03. A courtesy copy of this decision is being mailed to the address noted on the petition. However, until otherwise instructed, all future correspondence regarding this application will be mailed solely to the address of record.

This application is being referred to Technology Center Art Unit 2191 for processing of the Amendment filed with the petition in due course.

Telephone inquiries concerning this decision should be directed to the undersigned at (571) 272-3232.

Derek L. Woods
Attorney
Office of Petitions

CC: RG & ASSOCIATES
1103 TWIN CREEKS
SUITE 120
ALLEN, TX 75013

[1] 37 CFR 1.137(b)(3) requires a statement that "the entire delay in filing the required reply from the due date for the reply until the filing of a grantable petition pursuant to 37 CFR 1.137(b) was unintentional." Since the statement appearing in the renewed petition varies from the language required by 37 CFR 1.137(b)(3), the statement is being construed as the required statement. Petitioner must notify the Office if this is **not** a correct reading of the statement appearing in the petition.

UNITED STATES PATENT AND TRADEMARK OFFICE

Commissioner for Patents
United States Patent and Trademark Office
P.O. Box 1450
Alexandria, VA 22313-1450
www.uspto.gov

John G. Shudy, Jr.
Patent Services
Honeywell International Inc.
101 Colombia Road
Morristown, NJ 07962

COPY MAILED

JUL 2 7 2004

OFFICE OF PETITIONS

In re Application of	:	
Robert D. Horning, et al.	:	
Application No. 09/873,931	:	ON PETITION
Filed: June 4, 2001	:	
Attorney Docket No. H16-16009 US	:	

This is a decision on the petition under 37 CFR 1.137(b), filed July 6, 2004, to revive the above-identified application. The application became abandoned for failure to timely reply to a final Office action mailed December 4, 2002.

Extensions of time under 37 CFR 1.136 are available only if asked for prior to or with the response. In no case, however, may an applicant respond later than the maximum time period set by statute. Accordingly, if the question of abandonment arises when the provisions of 37 CFR 1.136 can no longer be used, then the application is abandoned when the unextended time for response has expired. Therefore, no extension of time fees are due on a petition for revival. Petitioner may request a refund of the $110 extension fee in writing. A copy of this decision should accompany petitioner's request.

The petition is found to comply with the requirements of 37 CFR 1.137(b). Accordingly, the petition is **GRANTED**.

The application is revived for consideration of a submission under 37 CFR 1.114 (request for continued examination).

The application file does not indicate a change of address has been filed in this case, although the address given on the petition differs from the address of record. A change of address should be filed in this case in accordance with MPEP 601.03. A courtesy copy of this decision is being mailed to the address noted on the petition. However, until otherwise instructed, all future correspondence regarding this application will be mailed solely to the address of record.

Telephone inquiries concerning this decision should be directed to the undersigned at (703) 305-9220.

The application is being forwarded to Technology Center AU 2814, for further processing of the request for continued examination under 37 CFR 1.114 filed July 6, 2004.

Sherry D. Brinkley
Petitions Examiner
Office of Petitions
Office of the Deputy Commissioner
for Patent Examination Policy

cc: John S. Munday
Law Offices of John S. Munday
P.O. Box 423
Isanti, MN 55050

Application No. 09/460,818

UNITED STATES PATENT AND TRADEMARK OFFICE

COMMISSIONER FOR PATENTS
UNITED STATES PATENT AND TRADEMARK OFFICE
P.O. BOX 1450
ALEXANDRIA, VA 22313-1450
www.uspto.gov

Paper No. 9

SONNENSCHEIN NATH & ROSENTHAL
SEARS TOWER
WACKER DRIVE STATION
P.O. BOX 061080
CHICAGO, IL 60606-1080

COPY MAILED

FEB 2 5 2004

OFFICE OF PETITIONS

In re Application of	:	
Robert M. Lund et al	:	
Application No. 09/873,933	:	ON PETITION
Filed: June 4, 2001	:	
Attorney Docket No. 09775810-0035	:	

This is a decision on the petition under 37 CFR 1.137(b), filed February 17, 2004, to revive the above-identified application.

The petition is **GRANTED**.

The above-identified application became abandoned for failure to reply in a timely manner to the non-final Office action mailed January 16, 2003, which set a shortened statutory period for reply of three (3) months. No extensions of time under the provisions of 37 CFR 1.136(a) were obtained. Accordingly, the above-identified application became abandoned on April 17, 2003.

Telephone inquiries concerning this decision should be directed to Wan Laymon at (703) 305-9282.

The application file is being forwarded to Technology Center AU 2643.

Wan Laymon

Wan Laymon
Petitions Examiner
Office of Petitions
Office of the Deputy Commissioner
for Patent Examination Policy

UNITED STATES PATENT AND TRADEMARK OFFICE

Commissioner for Patents
United States Patent and Trademark Office
P.O. Box 1450
Alexandria, VA 22313-1450
www.uspto.gov

Vincent J. Gnoffo
BRINKS HOFER GILSON & LIONE
P. O. BOX 10395
CHICAGO, IL 60610

COPY MAILED

JUN 0 2 2005

OFFICE OF PETITIONS

In re Application of	:	
Huang et al.	:	
Application No.09/873,943	:	DECISION ON APPLICATION
Filed: June 4, 2001	:	FOR
Attorney Docket No. 8285/412	:	PATENT TERM ADJUSTMENT
	:	

This is a decision on the "REQUEST FOR RECONSIDERATION OF PATENT TERM ADJUSTMENT UNDER 37 C.F.R. § 1.705(d)," filed March 24, 2005. Applicants request that at least an additional 214 days should be added to the patent term adjustment solely on the basis that the Office will take in excess of three years to issue the patent[1].

The instant application for patent term adjustment requests reconsideration of the patent term adjustment as it relates to the Office's failure to issue the patent within 3 years of the filing date. A decision is being **held in abeyance** until after the actual patent date. Knowledge of the actual date the patent issues is required to calculate the amount, if any, of additional patent term patentee is entitled to for Office failure to issue the patent within 3 years. See § 1.703(b).

Patentees are given **TWO (2) MONTHS** from the issue date of the patent to file a written request for reconsideration of the patent term adjustment for Office failure to issue the patent within 3 years. A copy of this decision should accompany the request. Patentees may seek such consideration without payment

[1] Otherwise, applicants agree with the initial determination of patent term adjustment at the time of the mailing of the notice of allowance.

of an additional fee. However, as to all other bases for seeking reconsideration of the patent term adjustment indicated in the patent, all requirements of § 1.705(d) must be met. Requests for reconsideration on other bases must be timely filed and must include payment of the required fee.

Petitioner is reminded that if an application is entitled to an adjustment under 35 U.S.C. 154(b)(1)(B), the entire period during which the application (except for periods excluded under 35 U.S.C. 154(b)(1)(B)(i)-(iii)), and not just the period beginning three years after the actual filing date of the application, is the period of delay under 35 U.S.C. 154(b)(1)(B) in determining whether periods of delay overlap under 35 U.S.C. 154(b)(2)(A). Thus, any days of delay for Office issuance of the patent more than 3 years after the filing date of the application, which overlap, with the days of patent term adjustment accorded prior to the issuance of the patent will not result in any additional patent term adjustment. See 35 U.S.C. 154(b)(1)(B), 35 U.S.C. 154(b)(2)(A), and 37 CFR § 1.703(f). See also *Revision of Patent Term Extension and Patent Term Adjustment Provisions; Final Rule*, 69 Fed. Reg. 21704 (April 22, 2004).

The Office acknowledges submission of the $200.00 fee set forth in 37 CFR 1.18(e). No additional fees are required.

The application file is being forwarded to the Office of Patent Publication for issuance of the patent.

Telephone inquiries specific to this matter should be directed to Nancy Johnson, Senior Petitions Attorney, at (571) 272-3219.

Karin A Ferriter
for

Karin Ferriter
Senior Legal Advisor
Office of Patent Legal Administration
Office of Deputy Commissioner
for Patent Examination Policy

UNITED STATES PATENT AND TRADEMARK OFFICE

Commissioner for Patents
United States Patent and Trademark Office
P.O. Box 1450
Alexandria, VA 22313-1450
www.uspto.gov
DIW Sep-06

Paper No. 5

PAUL H. GINSBURG
PFIZER INC.
20TH FLOOR
235 EAST 42ND STREET
NEW YORK NY 10017-5755

COPY MAILED

SEP 05 2006

OFFICE OF PETITIONS

In re Application of	:	
Prakash et al.	:	
Application No. 09/873,973	:	DECISION ON PETITION
Filed: 4 June, 2001	:	
Atty Docket No. PC11029A.KXD	:	

This is a decision on the petition filed on 13 March, 2006 (certificate of mailing date 27 May, 2004), under 37 CFR 1.137(b),[1] to revive the above-identified application.

The petition is **GRANTED**.

---

[1] Effective December 1, 1997, the provisions of 37 CFR 1.137(b) now provide that where the delay in reply was unintentional, a petition may be filed to revive an abandoned application or a lapsed patent pursuant to 37 CFR 1.137(b). A grantable petition filed under the provisions of 37 CFR 1.137(b) must be accompanied by:

(1) the required reply, unless previously filed. In a nonprovisional application abandoned for failure to prosecute, the required reply may be met by the filing of a continuing application. In a nonprovisional utility or plant application filed on or after June 8, 1995, and abandoned for failure to prosecute, the required reply may also be met by the filing of a request for continuing examination in compliance with § 1.114. In an application or patent, abandoned or lapsed for failure to pay the issue fee or any portion thereof, the required reply must be the payment of the issue fee or any outstanding balance thereof. In an application, abandoned for failure to pay the publication fee, the required reply must include payment of the publication fee.

(2) the petition fee as set forth in 37 CFR 1.17(m);

(3) a statement that the entire delay in filing the required reply from the due date for the reply until the filing of a grantable petition pursuant to 37 CFR 1.137(b) was unintentional. The Commissioner may required additional information where there is a question whether the delay was unintentional; and

(4) any terminal disclaimer (and fee as set forth in 37 CFR 1.20(d)) required pursuant to 37 CFR 1.137(c)).

The application became abandoned on 3 October, 2001, for failure to timely reply to the Notice to File Missing Parts of Nonprovisional Application mailed on 2 August, 2001, which set a two (2) month shortened period for reply. No extensions of time under 37 CFR 1.136(a) were obtained. Notice of Abandonment was mailed on 6 November, 2003.

The address on the petition is different than the address in Office records. A courtesy copy of this decision will be mailed to the address listed in the petition. All future correspondence, however, will be mailed solely to the address of record.

This application is being referred to the Office of Initial Patent Examination for further processing.

Telephone inquiries concerning this matter may be directed to the undersigned at (571)272-3231.

Douglas I. Wood
Senior Petitions Attorney
Office of Petitions

cc: Pfizer, Inc.
Global Intellectual Property
150 East 42nd Street, 5th Floor
New York NY 10017-5755

UNITED STATES PATENT AND TRADEMARK OFFICE

Commissioner for Patents
United States Patent and Trademark Office
P.O. Box 1450
Alexandria, VA 22313-1450
www.uspto.gov

MAIL

SEP - 9 2004

DIRECTOR OFFICE
TECHNOLOGY CENTER 2100

John W. L. Ogilvie
1320 East Laird Avenue
Salt Lake City, UT 84105

In re Application of:
Ron McCABE, et al.
Application No. 09/873,977
Filed: June 2, 2001
For: FLEXIBLE REMOTE DATA MIRRORING

DECISION ON REQUEST TO WITHDRAW AS ATTORNEY OR AGENT

This is a decision on the Request to Withdraw from Representation filed May 11, 2004.

A grantable request to withdraw as attorney of record should indicate thereon the present mailing addresses of the attorney(s) who is/are withdrawing from the record and of the applicant. The request for withdrawal must be signed by every attorney seeking to withdraw or contain a clear indication that one attorney is signing on behalf of another/others. A request to withdraw will not be approved unless at least 30 (thirty) days would remain between the date of approval and the later of the expiration date of a time to file a response or the expiration date of the maximum time period which can be extended under 37 C.F.R. § 1.136(a). The effective date of withdrawal being the date of decision and not the date of request. See M.P.E.P. § 402.06. 37 C.F.R. § 1.36 further requires that the applicant or patent owner be notified of the withdrawal of the attorney or agent.

The request is **GRANTED.**

All future communications from the Office will be directed to the below-listed address until otherwise notified by applicant. This correspondence address is provided by the withdrawn attorney(s). Applicant is reminded of the obligation to promptly notify the Patent and Trademark Office (Office) of any change in correspondence address to ensure receipt of all communications from the Office.

BEST AVAILABLE COPY

Vincent N. Trans
Special Program Examiner
Technology Center 2100
Computer Architecture, Software, and
Information Security
703-305-9750

cc: Ron McCabe
MiraLink Corporation
28 SW 1st Avenue, Ste 410
Portland, OR 97204

BEST AVAILABLE COPY

UNITED STATES PATENT AND TRADEMARK OFFICE

UNDER SECRETARY OF COMMERCE FOR INTELLECTUAL PROPERTY AND
DIRECTOR OF THE UNITED STATES PATENT AND TRADEMARK OFFICE
WASHINGTON, DC 20231
www.uspto.gov

Robert E. Bushnell
Suite 300
1522 K. Street, N.W.
Washington, DC 20005

MAILED

JUL 16 2002

DIRECTOR'S OFFICE
TECHNOLOGY CENTER 3600

In re Application of Shigeharu Nakagawa SERIAL NO: 09/874,010 FILED: June 6, 2001 FOR: APPARATUS AND TECHNIQUE FOR ON-DEMAND PRINTING, AND ON-DEMAND PRINTING SERVICES	: : : :	DECISION ON PETITION TO MAKE APPLICATION SPECIAL (AGE)

This is a decision on your petition submitted on June 11, 2002 to make the above-referenced application special on the basis that applicant is over 65 years of age.

The petition has been found to comply with all requirements of section 708.02, part IV of the Manual of Patent Examining Procedures, and will be GRANTED for that reason.

The Examiner is directed (1) to make an interference search for possible interfering applications, (2) to promptly examine this application out of turn, and (3) if any interfering application is discovered, to examine such application simultaneously and state in the first official letter of such application that it is being taken out of turn because of a possible interference.

Petitioner is advised that this application will continue to be special, throughout its entire prosecution and pendency, including interference or appeal, if any, only if Petitioner makes a prompt bona fide effort, in response to each office action, to place the application in condition for allowance, even if it is necessary to conduct an interview with the Examiner to accomplish this purpose.

The application is being forwarded to the examiner for accelerated examination consistent with the provisions of section 708.02 of the MPEP.

Kenneth J. Dorner
Special Programs Examiner
Technology Center 3600

UNITED STATES PATENT AND TRADEMARK OFFICE

Commissioner for Patents
United States Patent and Trademark Office
P.O. Box 1450
Alexandria, VA 22313-1450
www.uspto.gov

Paper No. 7

Brian Kinnear
Holland & Hart, LLP
Suite 3200
555 Seventeenth Street
Denver, CO 80202

COPY MAILED

JUL 1 3 2004

OFFICE OF PETITIONS

In re Application of	:	
Samuel Alan Johnson	:	
Application No. 09/874,026	:	ON PETITION
Filed: June 6, 2001	:	
Attorney Docket No. 46473.830009.US0	:	

This is a decision on the petition under 37 CFR 1.137(b), filed June 7, 2004, to revive the above-identified application.

The above-identified application became abandoned for failure to reply in a timely manner to the Notice to File Corrected Application Papers (Notice) mailed August 6, 2001. The Notice set a period for reply of two (2) months from the mail date of the Notice. No extensions of time under the provisions of 37 CFR 1.136(a) were obtained. Accordingly, the above-identified application became abandoned after midnight October 6, 2001. A Notice of Abandonment was mailed February 9, 2004.

In response, petitioner submitted with the instant petition $640 for the petition to revive fee, and a substitute specification, along with the abstract and claims commencing on a separate sheet. However, petitioner should note that effective October 1, 2003, the petition to revive fee was increased from $650 to $665. Therefore, per authorization given in the instant petition, the fee deficiency of $25 has been charged to petitioner's deposit account.

37 CFR 1.137(b)(3) requires a statement that the entire delay in filing the required reply from the due date for the reply until the filing of a grantable petition pursuant to 37 CFR 1.137(b) was unintentional. Since the statement contained in the instant petition varies from the language required by 37 CFR 1.137(b)(3), the statement is being construed as the statement required by 37 CFR 1.137(b)(3) and petitioner must notify the Office if this is **not** a correct interpretation of the statement.

The petition is **GRANTED**.

The file does not indicate a change of address has been submitted, although the address given on the petition differs slightly from the address of record. If appropriate, a change of address should be filed in accordance with MPEP 601.03. A courtesy copy of this decision is being mailed to the address given on the petition; however, the Office will mail all future correspondence solely to the address of record.

The application file is being forwarded to the Office of Initial Patent Examination for further processing.

Telephone inquiries concerning this decision should be directed to the undersigned at (703) 308-6711.

Andrea Smith
Petitions Examiner
Office of Petitions
Office of the Deputy Commissioner
for Patent Examination Policy

CC: Brian Kinnear
Holland & Hart, LLP
555 17th Street, Suite 2900
P.O. Box 8749
Denver, CO 80201

UNITED STATES PATENT AND TRADEMARK OFFICE

Commissioner for Patents
United States Patent and Trademark Office
P.O. Box 1450
Alexandria, VA 22313-1450
www.uspto.gov

ARENT FOX KINTNER PLOTKIN & KAHN, PLLC
1050 CONNECTICUT AVENUE, N.W., SUITE 600
WASHINGTON, DC 20036-5339

COPY MAILED

FEB 0 9 2007

OFFICE OF PETITIONS

In re Application of :
Matsuzaki, Yasurou :
Application No. 09/874,037 :
Filed: June 6, 2001 :
Attorney Docket No. 100353-00064 :

ON PETITION

This is a decision on the petition under 37 C.F.R. § 1.137(b), filed August 10, 2006, to revive the above-identified application.

The petition is **GRANTED.**

The petition satisfies the conditions for revival pursuant to the provisions of 37 CFR 1.137(b) in that (1) the reply in the form of a Request for Continued Examination (RCE) and a Preliminary Amendment; (2) the petition fee; and (3) the required statement of unintentional delay have been received. Accordingly, the response has been accepted as having been unintentionally delayed.

The above-identified application has been abandoned for an extended period of time. The Patent and Trademark Office is relying on petitioner's duty of candor and good faith and accepting the statement that the entire delay in filing the required reply from the due date for the reply until the filing of a grantable petition pursuant to 37 CFR 1.137(b) was unintentional.[1]

This matter is being referred to Technology Center 2800 for processing of the Request for Continued Examination under 37 CFR 1.114 filed with the instant petition.

Telephone inquiries regarding this decision should be directed to the undersigned at (571) 272-3282.

Liana Walsh
Petitions Examiner
Office of Petitions

[1] See Changes to Patent Practice and Procedure, 62 Fed. Reg. at 53160 and 53178; 1203 Off. Gaz. Pat. Office at 88 and 103 (responses to comments 64 and 109) (applicant obligated under 37 CFR 10.18 to inquire into the underlying facts and circumstances when providing the statement required by 37 CFR 1.137(b) to the Patent and Trademark Office).

SPE RESPONSE FOR CERTIFICATE OF CORRECTION

Paper No.: _____

DATE : March 23, 2006

TO SPE OF : ART UNIT 2124

SUBJECT : Request for Certificate of Correction for Appl. No.: 09/874044 Patent No.: 6,981,012

Please respond to this request for a certificate of correction within 7 days.

Please review the requested changes/corrections as shown in the **COCIN** document(s) in the IFW application image. No new matter should be introduced, nor should the scope or meaning of the claims be changed.

Please complete the response (see below) and forward the completed response to scanning using document code **COCX**.

Magdalene Talley

Certificates of Correction Branch

703-308-9390 ext. 116

Thank You For Your Assistance

The request for issuing the above-identified correction(s) is hereby:

Note your decision on the appropriate box.

TAN V. MAI
A.U. 2193

- [x] **Approved** — **All** changes apply.
- [ ] **Approved in Part** — Specify below which changes **do not** apply.
- [ ] **Denied** — State the reasons for denial below.

Comments: _____

SPE

2193
Art Unit

UNITED STATES PATENT AND TRADEMARK OFFICE

Commissioner for Patents
United States Patent and Trademark Office
P.O. Box 1450
Alexandria, VA 22313-1450
www.uspto.gov

TOM VAN ZANDT
BLAKELY SOKOLOFF TAYLOR & ZAFMAN
12400 WILSHIRE BOULEVARD, SEVENTH FLOOR
LOS ANGELES, CA 90025

COPY MAILED

MAR 1 5 2005

OFFICE OF PETITIONS

In re Application of	:	
Emir Gurer et al	:	
Application No. 09/874,073	:	ON PETITION
Filed: June 4, 2001	:	
Attorney Docket No. 06601.P036C	:	

This is a decision on the petition under 37 CFR 1.137(b), filed March 7, 2004, to revive the above-identified application.

The petition is **GRANTED**.

The above-identified application became abandoned for failure to submit the issue fee and publication fee in a timely manner in reply to the Notice of Allowance mailed September 22, 2004, which set a statutory period for reply of three (3) months. Accordingly, the above-identified application became abandoned on December 23, 2004.

The Change of Correspondence address and Request for Change of Attorney Docket Number have been entered and made of record.

Telephone inquiries concerning this decision should be directed to Wan Laymon at (571) 272-3220.

This matter is being referred to Publishing Division.

Wan Laymon

Wan Laymon
Petitions Examiner
Office of Petitions
Office of the Deputy Commissioner
for Patent Examination Policy

UNITED STATES PATENT AND TRADEMARK OFFICE

COMMISSIONER FOR PATENTS
UNITED STATES PATENT AND TRADEMARK OFFICE
P.O. BOX 1450
ALEXANDRIA, VA 22313-1450
www.uspto.gov

Paper No. 8

ROBERT B. O'ROURKE
BLAKELY, SOKOLOFF, TAYLOR & ZAFMAN LLP
SEVENTH FLOOR
12400 WILSHIRE BLVD.
LOS ANGELES, CA 90025-1026

COPY MAILED

DEC 22 2003

OFFICE OF PETITIONS

In re Application of
Lund, et al.
Application No. 09/874,088
Filing date: June 4, 2001
Attorney Docket No. 05043.P007
For: METHOD AND APPARATUS FOR LINE AND PATH SELECTION WITHIN SONET/SDH BASED NETWORKS

: DECISION ON PETITION

This is a decision on the petition under 37 CFR 1.182, filed December 12, 2003 (certificate of mailing date December 10, 2003), to change the name of the first listed joint inventor.

The petition is **GRANTED**.

The last name of the first listed joint inventor will be changed from "Frannhagen" to "Lund." A replacement filing receipt reflecting this change is enclosed.

After the mailing of this decision, the application file will be forwarded to Technology Center 2600 for examination in due course.

Telephone inquiries concerning this matter may be directed to the undersigned at 703-308-6712.

E. Shirene Willis
Senior Petitions Attorney
Office of Petitions

enclosure: replacement filing receipt

UNITED STATES PATENT AND TRADEMARK OFFICE

UNITED STATES DEPARTMENT OF COMMERCE
United States Patent and Trademark Office
Address: COMMISSIONER FOR PATENTS
P.O. Box 1450
Alexandria, Virginia 22313-1450
www.uspto.gov

APPLICATION NO.	FILING DATE	FIRST NAMED INVENTOR	ATTORNEY DOCKET NO.	CONFIRMATION NO.
09/874,117	06/04/2001	Carol Wright	JJI-51	8772

27777 7590 02/14/2007
PHILIP S. JOHNSON
JOHNSON & JOHNSON
ONE JOHNSON & JOHNSON PLAZA
NEW BRUNSWICK, NJ 08933-7003

EXAMINER
GHERBI, SUZETTE JAIME J

ART UNIT	PAPER NUMBER
3738	

MAIL DATE	DELIVERY MODE
02/14/2007	PAPER

Please find below and/or attached an Office communication concerning this application or proceeding.

UNITED STATES PATENT AND TRADEMARK OFFICE

COMMISSIONER FOR PATENTS
UNITED STATES PATENT AND TRADEMARK OFFICE
P.O. BOX 1450
ALEXANDRIA, VA 22313-1450
www.uspto.gov

In re Patent No. WRIGHT ET AL.	:	
Issue Date: July 1, 2003	:	**DECISION GRANTING**
Appl No.: 09/874,117	:	**PETITION**
Filed: June 04, 2001	:	*37 CFR 1.324*
For: STENT WITH THERAPEUTICALLY ACTIVE	:	
DOSAGE OF RAPAMYCIN COATED THEREON	:	
	:	
	:	

This is a decision on the petition filed January 9, 2007 to correct inventorship under 37 CFR 1.324.

The petition is granted.

The patented file is being forwarded to Certificate of Corrections Branch for issuance of a certificate naming only the actual inventor or inventors.

Corrine M. McDermott
Supervisory Patent Examiner
Art Unit 3738
Technology Center 3700

PHILIP S. JOHNSON
JOHNSON & JOHNSON
ONE JOHNSON & JOHNSON PLAZA
NEW BRUNSWICK, NJ 08933-7003

UNITED STATES PATENT AND TRADEMARK OFFICE

COMMISSIONER FOR PATENTS
UNITED STATES PATENT AND TRADEMARK OFFICE
P.O. BOX 1450
ALEXANDRIA, VA 22313-1450
www.uspto.gov

DATE: February 7, 2007
TO: Certificates of Correction Branch
FROM: Corrine M. McDermott
SPE, Art Unit 3738
SUBJECT: REQUEST FOR CERTIFICATE OF CORRECTION

Please issue a Certificate of Correction in U. S. Letters Patent No. 6,585,764 as specified on the attached Certificate.

Corrine M. McDermott, SPE
Art Unit 3738

UNITED STATES PATENT AND TRADEMARK OFFICE

CERTIFICATE

Patent No. 6,585,764
Patented: July 1, 2003

On petition requesting issuance of a certificate for correction of inventorship pursuant to 35 U.S.C. 256, it has been found that the above identified patent, through error and without deceptive intent, improperly sets forth the inventorship. Accordingly, it is hereby certified that the correct inventorship of this patent is:

Carol Wright, Somerset; Gerard H. Llanos, Stewartsville; Ronald Rakos, Middlesex County; Kristen King, Hoboken; Robert Falotico; Bell Mead, all of NJ.

Corrine M. McDermott
Supervisory Patent Examiner
Art Unit 3738

UNITED STATES PATENT AND TRADEMARK OFFICE

Commissioner for Patents
United States Patent and Trademark Office
P. O. Box 1450
Alexandria, VA 22313-1450
www.uspto.gov

Paper No. 10

Stanley R. Moore
Jenkens and Gilchrist PC
1445 Ross Avenue
Suite 3200
Dallas, TX 75202

COPY MAILED

MAY 2 0 2003

OFFICE OF PETITIONS

In re Application of	:	
Per-Olof Brandt	:	
Application No. 09/874,130	:	DECISION GRANTING PETITION
Filed: June 5, 2001	:	UNDER 37 CFR 1.137(f)
Attorney Docket No. 53807-00004USPT	:	

This is a decision on the petition filed April 29, 2003, to revive the instant nonprovisional application under the unintentional provisions of 37 CFR 1.137(f).

The petition is **GRANTED**.

Petitioner states that the instant non-provisional application is the subject of an application filed in a foreign country on May 22, 2002. However, the U. S. Patent and Trademark Office was unintentionally not notified of this filing within 45 days subsequent to the filing of the subject application in a foreign country.

In view of the above, this application became abandoned pursuant to 35 U.S.C. § 122(b)(2)(B)(iii) and 37 CFR 1.213(c) for failure to timely notify the Office of the filing of an application in a foreign country, or under a multilateral international agreement, that requires publication of applications 18 months after filing.

A petition under 37 CFR 1.137(f) must be accompanied by:

(1) the reply which is met by notification of such filing in a foreign country or under a multinational treaty;

(2) the petition fee as set forth in 37 CFR 1.17(m); and

(3) a statement that the entire delay in filing the required reply from the due date for the reply until the filing of a grantable petition was unintentional.

The instant petition has been found in compliance with the 37 CFR 1.137(f). Accordingly, the failure to timely notify the Office of a foreign or international filing within 45 days after the date of filing of such foreign or international application as provided by 35 USC 122(b)(2)(B)(iii) and 37 CFR 1.213(c) is accepted as having been unintentionally delayed.

Telephone inquiries concerning this decision should be directed to Marianne Morgan at (703) 306-3475.

This application is being forwarded to Technology Center Art Unit 2681 for examination in due course.

Frances Hicks

Frances M. Hicks
Lead Petitions Examiner
Office of Petitions
Office of the Deputy Commissioner
for Patent Examination Policy

UNITED STATES PATENT AND TRADEMARK OFFICE

Commissioner for Patents
United States Patent and Trademark Office
Washington, D.C. 20231
www.uspto.gov

Paper No. 8

FITCH EVEN TABIN AND FLANNERY
120 SOUTH LA SALLE STREET
SUITE 1600
CHICAGO IL 60603-3406

COPY MAILED

JUL 2 3 2002

OFFICE OF PETITIONS

In re Application of
Sakamoto, et al.
Application No. 09/874,137
Filed: June 5, 2001
Attorney Docket No. DKT00123

DECISION ON PETITION

This is a decision on the "Petition to Accept Declaration", filed May 8, 2002 (Certificate of Mailing dated April 29, 2002), requesting that the Commissioner find that the declaration has been properly filed and that the application be accorded a filing date of June 5, 2001.

The petition is **GRANTED**.

Application papers in the above-identified application were filed on June 5, 2001. However, as no oath or declaration was submitted, the Initial Patent Examination Division mailed a "Notice to File Missing Parts of Nonprovisional Application - Filing Date Granted" on August 3, 2001. This Notice set a shortened statutory period of two months for Applicant to file and executed oath or declaration (and the surcharge for its late filing). On February 14, 2002, applicant obtained a four month extension of time and filed a reply to the Notice.[1] On March 11, 2002, a "Notice of Incomplete Reply (Nonprovisional) - Filing Date Granted) was mailed. According to this Notice, applicant failed to submit an oath or declaration with his February 14th reply. A search of the application file does not reveal an oath or declaration filed on February 14, 2002.

Applicant argues that he did submit a declaration on February 14, 2002. In response, applicant has included a copy of a postcard receipt, identifying a "Declaration (4 pgs.)" as enclosed, and bearing a United States Patent and Trademark Office date stamp of February 14, 2002.

A postcard receipt which itemizes and properly identifies the items which are being filed serves as *prima facie* evidence of

[1] The reply was also made timely by including a Certificate of Mailing dated January 29, 2002.

receipt in the Office of all items listed thereon on the date stamped thereon by the Office.[2]

Therefore, it follows that since the declaration submitted on February 14, 2002 is not in the application file, it must have been lost by the Office.

In view thereof, the Notice of Incomplete Reply mailed March 11, 2002 is hereby **VACATED**.

The declaration submitted with the petition on May 8, 2002 is acknowledged and made of record.

Given the basis for granting this decision, no petition fee was required, and none has been charged.

The application file is being forwarded to the Office of Initial Patent Examination for completion of pre-examination processing.

Telephone inquiries related to this decision should be directed to Petitions Attorney Cliff Congo at 703-305-0272.

Beverly M. Flanagan
Supervisory Petitions Examiner
Office of Petitions
Office of the Deputy Commissioner
for Patent Examination Policy

---

[2] See MPEP 503.

UNITED STATES PATENT AND TRADEMARK OFFICE

COMMISSIONER FOR PATENTS
UNITED STATES PATENT AND TRADEMARK OFFICE
P.O. BOX 1450
ALEXANDRIA, VA 22313-1450
www.uspto.gov

Paper No. None

FISH & RICHARDSON PC
P.O. BOX 1022
MINNEAPOLIS MN 55440-1022

COPY MAILED
DEC 12 2006
OFFICE OF PETITIONS

In re Patent No. 7,098,311 :	
Koontz et al. :	DECISION ON REQUEST
Issue Date: August 29, 2006 :	FOR
Application No. 09/874,162 :	RECONSIDERATION OF
Filed: June 4, 2001 :	PATENT TERM ADJUSTMENT
Attorney Docket No. 05311-024001 :	
Title: FUSION OF JAZF1 AND JJAZ1 :	
GENES IN ENDOMETRIAL :	
STROMAL TUMORS :	

This is a decision on the "LETTER REGARDING PATENT TERM ADJUSTMENT," filed November 6, 2006. Patentees request that the patent term adjustment indicated on the face of the Letters Patent be corrected from one hundred and eighty-two (182) days. Petitioner has not set forth what length of term he believes to be correct, and merely states that 182 days "appears to be longer than appropriate."

The request for correction of the patent term adjustment indicated in the patent is **DISMISSED**.

Patentees are given **TWO MONTHS** to respond to this decision. No extensions of time will be granted under § 1.136.

On August 29, 2006, the above-identified application matured into U.S. Patent No. 7,098,311, with a revised Patent Term Adjustment of 182 days. It appears that patentees are pointing to the calculation of 703 days of PTO delay as being calculated

for issuance beyond three years from the filing of the application and as an error.

A review of the record confirms that eight-hundred and sixteen (816) days were entered for Office delay in issuing the patent pursuant to § 1.702(b). Furthermore, this is the correct period of adjustment for the delay. It is noted that the instant patent issued 3 years and 816 days after its filing date. However, any days of delay for Office issuance of the patent more than 3 years after the filing date of the application which overlap with the days of patent term adjustment accorded prior to the issuance of the patent will not result in any additional patent term adjustment. Further, in considering the overlap, the entire period during which the application was pending (except for periods excluded under 35 U.S.C. 154(b)(1)(B)(i)-(iii), and not just the period beginning three years after the actual filing date of the application, is the period of delay under 35 U.S.C. 154(b)(1)(B) in determining whether periods of delay overlap under 35 U.S.C. 154(b)(2)(A). See 35 U.S.C. 154(b) (1)(B); 35 U.S.C. 154(b)(2)(A); and 37 CFR 1.703(f). In this instance, it was properly concluded that a total of 113 days overlapped. Thus, the additional non-overlapping period of 703 days was entered for Office delay in issuing the patent.

In view thereof, the patent properly issued with a revised patent term adjustment of 182 days (816 days of Office delay reduced by 634 days of applicant delay).

To the extent that this letter was submitted as an advisement to the Office of an error in Patentees' favor, the Office will not assess the $200.00 fee under 37 CFR 1.18(e). The Office thanks patentees for their good faith and candor in bringing this to the attention of the Office.

Telephone inquiries specific to this matter should be directed to Senior Attorney Paul Shanoski at (571) 272-3225.

Nancy Johnson
Senior Petitions Attorney
Office of Petitions

UNITED STATES PATENT AND TRADEMARK OFFICE

COMMISSIONER FOR PATENTS
UNITED STATES PATENT AND TRADEMARK OFFICE
P.O. BOX 1450
ALEXANDRIA, VA 22313-1450
www.uspto.gov

Paper No. 10

Polsinelli Shalton & Welte, P.C.
700 W. 47th Street, Suite 1000
Kansas City, MO 64112-1802

COPY MAILED

JAN 14 2004

OFFICE OF PETITIONS

In re Application of
Lee M. Greenberg, et. al.
Application No. 09/874,178
Filed: June 4, 2001
Attorney Docket No. 53914

ON PETITION

This is a decision on the petition under 37 CFR 1.137(b), filed August 13, 2003, to revive the above-identified application.

The petition is **Dismissed**.

The above-identified application became abandoned for failure to reply in a timely manner to the non-final Office action mailed April 8, 2002, which set a shortened statutory period for reply of three (3) months. No extensions of time under the provisions of 37 CFR 1.136(a) were obtained. Accordingly, the above-identified application became abandoned after midnight July 8, 2002.

A grantable petition to revive an abandoned application under 37 CFR 1.137(b) must be accompanied by: (**1**) the required reply (unless previously filed), which may met by the filing of a continuing application in a nonprovisional application abandoned for failure to prosecute, but must be the payment of the issue fee or any outstanding balance thereof in an application or patent, abandoned or lapsed for failure to pay the issue fee or any portion thereof; (**2**) the petition fee required by 37 CFR 1.17(m); (**3**) a statement that the entire delay in filing the required reply from the due date for the reply until the filing of a grantable petition pursuant to 37 CFR 1.137(b) was unintentional; and (**4**) a terminal disclaimer (and fee as set forth in 37 CFR 1.20(d)). This petition lacks items (2), (3) and (4) above.

As to item (2), effective October 1, 2003, the small entity petition fee was increased to $665. Therefore, in order for the Office to consider the instant petition, the required $665 petition to revive fee must be submitted.

As to item (3), the instant petition is signed by Lee Greenberg, who appears to be one of two inventors. 37 CFR 1.33(b) states:

> Amendments and other papers filed in the application must be signed by:
>
> (1) An attorney or agent of record appointed in compliance with § 1.34(b);
>
> (2) A registered attorney or agent not of record who acts in a representative capacity under the provisions of § 1.34(a);
>
> (3) The assignee of record of the entire interest, if there is an assignee of record of the entire interest;

(4) An assignee of record of an undivided part interest, and any assignee(s) of the remaining interest and any applicant retaining an interest, if there is an assignee of record of an undivided part interest; or

(5) **All of the applicants (§§ 1.42. 1.43 and 1.47) for patent, unless there is an assignee of record of the entire interest and such assignee has taken action in the application in accordance with §§ 3.71 and 3.73**.

If the instant petition is signed on behalf of the assignee, the petition does not comply with 37 CFR 3.73(b). **37 CFR 3.73(b) provides that: (1) when an assignee seeks to take action in a matter before the Office, the assignee must establish its ownership of the property to the satisfaction of the Commissioner; (2) ownership is established by submitting to the Office, in the Office file related to the matter in which action is sought to be taken, documentary evidence of a chain of title from the original owner to the assignee (*e.g.*, copy of an executed assignment submitted for recording) or by specifying (*e.g.*, reel and frame number) where such evidence is recorded in the Office; (3) the submission establishing ownership must be signed by a party authorized to act on behalf of the assignee; and (4) documents submitted to establish ownership may be required to be recorded as a condition to permitting the assignee to take action in a matter pending before the Office**. A 37 CFR 3.73(b) statement is enclosed with this decision.

As to item (4), the terminal disclaimer filed August 13, 2003, cannot be accepted since it is signed by only one (1) inventor, and it lacks the required $55 terminal disclaimer fee.

Petitioner should note that the power of attorney filed August 13, 2003, has been acknowledged. However, since it is also signed by only one inventor, it will not be entered.

Petitioner, Lee Greenberg, is asked to submit the $665 petition fee, $55 terminal disclaimer fee, and to either re-submit the petition, terminal disclaimer, and power of attorney filed August 13, 2003, to include the signature of Judy Smith or prove rightful ownership by submitting the enclosed Statement under 37 CFR 3.73(b), in accordance with 37 CFR 3.73(b), as stated above.

Any request for reconsideration of this decision must be submitted within **TWO (2) MONTHS** from the mail date of this decision. Extensions of time under 37 CFR 1.136(a) are permitted. The reconsideration request should include the lacking items noted above and a cover letter entitled "Renewed Petition under 37 CFR 1.137(b)."

Further correspondence with respect to this matter should be addressed as follows:

By Mail: Mail Stop PETITION
Commissioner for Patents
Post Office Box 1450
Alexandria, VA 22313-1450

Effective December 1, 2003, the Office of Petitions can no longer receive hand-carried correspondence, or facsimile transmissions of correspondence. The centralized location for hand-carried correspondence is the Customer Window located at:

2011 South Clark Place
Crystal Plaza Two, Lobby
Room 1B03
Arlington, VA 22202

The centralized facsimile number is (703) 872-9306.

Any questions concerning this matter may be directed to Andrea Smith at (703) 308-6711.

Andrea Smith
Petitions Examiner
Office of Petitions
Office of the Deputy Commissioner
for Patent Examination Policy

Enclosure: Statement Under 37 CFR 3.73(b)

CC: Lee Greenberg
12058 Craigview Court
St. Louis, MO 63146

UNITED STATES PATENT AND TRADEMARK OFFICE

Commissioner for Patents
United States Patent and Trademark Office
P.O. Box 1450
Alexandria, VA 22313-1450
www.uspto.gov

GREEN, SCHAAF AND JACOBSON P.C.
SUITE 700; PIERRE LACLEDE CENTER
7733 FORSYTH BOULEVARD
ST. LOUIS MO 63105

COPY MAILED

APR 0 7 2005

OFFICE OF PETITIONS

In re Application of
Greenberg & Smith
Application No. 09/874,178
Filed: June 4, 2001
Attorney Docket No. 53914
For: SYNTHETIC MULCH

ON PETITION

This is a decision on the reconsideration petition under 37 CFR 1.137(b), filed on June 14, 2004, to revive the above-identified application.

The above-identified application became abandoned for failure to reply in a timely manner to the April 8, 2002 non-final Office action which set an extendable three (3) month period for reply. No extensions of time having been obtained pursuant to 37 CFR 1.136(a) and no reply being received in the Office, this application became abandoned on July 9, 2002. A Notice of Abandonment was mailed on December 23, 2002.

Applicant has submitted an amendment/election in reply to the April 8, 2002 non-final Office action, an acceptable statement of the unintentional nature of the delay in responding to the April 8, 2002 non-final Office action, and the petition fee.

The petition is **GRANTED**.

As this application was filed after June 8, 1995, no terminal disclaimer is required to revive the application. Therefore, the $55.00 terminal disclaimer fee submitted on June 14, 2004 will be credited to deposit account no. 20-0823. The fee was paid from deposit account no. 20-0823.

After the mailing of this decision the application will be forwarded to Technology Center 1700's technical support staff for entry of the amendment filed on June 14, 2004.

Telephone inquiries pertaining to this decision may be directed to the undersigned at (571) 272-3230.

E. Shirene Willis

E. Shirene Willis
Senior Petitions Attorney
Office of Petitions

Approved for use through 04/30/2009. OMB 0651-0016
U.S. Patent and Trademark Office: U.S. DEPARTMENT OF COMMERCE
Under the Paperwork Reduction Act of 1995, no persons are required to respond to a collection of information unless it displays valid OMB control number.

PETITION TO ACCEPT UNINTENTIONALLY DELAYED PAYMENT OF MAINTENANCE FEE IN AN EXPIRED PATENT (37 CFR 1.378(c))

Patent Number	Issue Date (YYYY-MM-DD)	Application Number	Filing Date (YYYY-MM-DD)	Docket Number (if applicable)
6,466,009	2002-10-15	09874233	2001-06-06	P09463US00/RFH

CAUTION: Maintenance fee (and surcharge, if any) payment must correctly identify: (1) the patent number and (2) the application number of the actual U.S. application leading to issuance of that patent to ensure the fee(s) is/are associated with the correct patent. 37 CFR 1.366(c) and (d).

SMALL ENTITY
☐ Patentee claims, or has previously claimed, small entity status. See 37 CFR 1.27.

LOSS OF ENTITLEMENT TO SMALL ENTITY STATUS
☐ Patentee is no longer entitled to small entity status. See 37 CFR 1.27(g)

NOT Small Entity		Small Entity	
Fee	Code	Fee	Code
◉ 3 ½ year	(1551)	○ 3 ½ year	(2551)
○ 7 ½ year	(1552)	○ 7 ½ year	(2552)
○ 11 ½ year	(1553)	○ 11 ½ year	(2553)

SURCHARGE
The surcharge required by 37 CFR 1.20(i)(2) (Fee Code 1558) must be paid as a condition of accepting unintentionally delayed payment of the maintenance fee.

MAINTENANCE FEE (37 CFR 1.20(e)-(g))
The appropriate maintenance fee must be submitted with this petition.

STATEMENT
THE UNDERSIGNED CERTIFIES THAT THE DELAY IN PAYMENT OF THE MAINTENANCE FEE TO THIS PATENT WAS UNINTENTIONAL

PETITIONER(S) REQUEST THAT THE DELAYED PAYMENT OF THE MAINTENANCE FEE BE ACCEPTED AND THE PATENT REINSTATED

THIS PORTION MUST BE COMPLETED BY THE SIGNATORY OR SIGNATORIES

37 CFR 1.378(d) states: "Any petition under this section must be signed by an attorney or agent registered to practice before the Patent and Trademark Office, or by the patentee, the assignee, or other party in interest."

I certify, in accordance with 37 CFR 1.4(d)(4) that I am

◉ An attorney or agent registered to practice before the Patent and Trademark Office

○ A sole patentee

○ A joint patentee; I certify that I am authorized to sign this submission on behalf of all the other patentees.

○ A joint patentee; all of whom are signing this e-petition

○ The assignee of record of the entire interest

Patent Practitioner			
A signature of the applicant or representative is required in accordance with 37 CFR 1.33 and 10.18. Please see 37 CFR 1.4(d) for the form of the signature			
Signature	/ROSS F. HUNT, JR./	Date (YYYY-MM-DD)	2008-08-04
Name	Ross F. Hunt, Jr.	Registration Number	24082

This collection of information is required by 37 CFR 1.378(c). The information is required to obtain or retain a benefit by the public which is to file (and by the USPTO to process) an application. Confidentiality is governed by 35 U.S.C. 122 and 37 CFR 1.11 and 1.14. This collection is estimated to take 1 hour to complete, including gathering, preparing, and submitting the completed application form to the USPTO. Time will vary depending upon the individual case. Any comments on the amount of time you require to complete this form and/ or suggestions for reducing this burden, should be sent to the Chief Information Officer, U.S. Patent and Trademark Office, U.S. Department of Commerce, P.O. Box 1450, Alexandria, VA 22313-1450. DO NOT SEND FEES OR COMPLETED FORMS TO THIS ADDRESS. **This form can only be used when in conjunction with EFS-Web. If this form is mailed to the USPTO, it may cause delays in reinstating the patent.**

Privacy Act Statement

The Privacy Act of 1974 (P.L. 93-579) requires that you be given certain information in connection with your submission of the attached form related to a patent application or patent. Accordingly, pursuant to the requirements of the Act, please be advised that: (1) the general authority for the collection of this information is 35 U.S.C. 2(b)(2); (2) furnishing of the information solicited is voluntary; and (3) the principal purpose for which the information is used by the U.S. Patent and Trademark Office is to process and/or examine your submission related to a patent application or patent. If you do not furnish the requested information, the U.S. Patent and Trademark Office may not be able to process and/or examine your submission, which may result in termination of proceedings or abandonment of the application or expiration of the patent.

The information provided by you in this form will be subject to the following routine uses:

1. The information on this form will be treated confidentially to the extent allowed under the Freedom of Information Act (5 U.S.C. 552) and the Privacy Act (5 U.S.C. 552a). Records from this system of records may be disclosed to the Department of Justice to determine whether the Freedom of Information Act requires disclosure of these record s.

2. A record from this system of records may be disclosed, as a routine use, in the course of presenting evidence to a court, magistrate, or administrative tribunal, including disclosures to opposing counsel in the course of settlement negotiations.

3. A record in this system of records may be disclosed, as a routine use, to a Member of Congress submitting a request involving an individual, to whom the record pertains, when the individual has requested assistance from the Member with respect to the subject matter of the record.

4. A record in this system of records may be disclosed, as a routine use, to a contractor of the Agency having need for the information in order to perform a contract. Recipients of information shall be required to comply with the requirements of the Privacy Act of 1974, as amended, pursuant to 5 U.S.C. 552a(m).

5. A record related to an International Application filed under the Patent Cooperation Treaty in this system of records may be disclosed, as a routine use, to the International Bureau of the World Intellectual Property Organization, pursuant to the Patent Cooperation Treaty.

6. A record in this system of records may be disclosed, as a routine use, to another federal agency for purposes of National Security review (35 U.S.C. 181) and for review pursuant to the Atomic Energy Act (42 U.S.C. 218(c)).

7. A record from this system of records may be disclosed, as a routine use, to the Administrator, General Services, or his/her designee, during an inspection of records conducted by GSA as part of that agency's responsibility to recommend improvements in records management practices and programs, under authority of 44 U.S.C. 2904 and 2906. Such disclosure shall be made in accordance with the GSA regulations governing inspection of records for this purpose, and any other relevant (i.e., GSA or Commerce) directive. Such disclosure shall not be used to make determinations about individuals.

8. A record from this system of records may be disclosed, as a routine use, to the public after either publication of the application pursuant to 35 U.S.C. 122(b) or issuance of a patent pursuant to 35 U.S.C. 151. Further, a record may be disclosed, subject to the limitations of 37 CFR 1.14, as a routine use, to the public if the record was filed in an application which became abandoned or in which the proceedings were terminated and which application is referenced by either a published application, an application open to public inspections or an issued patent.

9. A record from this system of records may be disclosed, as a routine use, to a Federal, State, or local law enforcement agency, if the USPTO becomes aware of a violation or potential violation of law or regulation.

UNITED STATES PATENT AND TRADEMARK OFFICE

Commissioner for Patents
United States Patent and Trademark Office
P.O. Box 1450
Alexandria, VA 22313-1450
www.uspto.gov

In re Patent No. 6466009
Issue Date: October 15,2002
Application No. 09874233
Filed: June 6,2001
Attorney Docket No. REC-3684

:

:DECISION GRANTING PETITION
:UNDER 37 CFR 1.378(c)

:

This is a decision on the electronic petition, filed August 4,2008 ,under 37 CFR 1.378(c) to accept the unintentionally delayed payment of the 3.5 year maintenance fee for the above-identified patent.

The petition is GRANTED.

The maintenance fee is accepted, and the above-identified patent reinstated as of August 4,2008 . This decision also constitutes notice that the fee has been accepted. An electronic copy of the petition and this decision has been created as an entry in an Image File Wrapper. Nevertheless, petitioner should print and retain an independent copy

Telephone inquires related to this electronic decision should be directed to the Electronic Business Center at 1-866-217-9197.

PTO/SB/66 (03-09)
Approved for use through 03/31/2012. OMB 0651-0016
U.S. Patent and Trademark Office: U.S. DEPARTMENT OF COMMERCE
Under the Paperwork Reduction Act of 1995, no persons are required to respond to a collection of information unless it displays valid OMB control number.

PETITION TO ACCEPT UNINTENTIONALLY DELAYED PAYMENT OF MAINTENANCE FEE IN AN EXPIRED PATENT (37 CFR 1.378(c))

Patent Number	Issue Date (YYYY-MM-DD)	Application Number	Filing Date (YYYY-MM-DD)	Docket Number (if applicable)
6,823,737	2004-11-30	09/874,235	2001-06-06	G000001917/DEJ

CAUTION: Maintenance fee (and surcharge, if any) payment must correctly identify: (1) the patent number and (2) the application number of the actual U.S. application leading to issuance of that patent to ensure the fee(s) is/are associated with the correct patent. 37 CFR 1.366(c) and (d).

SMALL ENTITY
☐ Patentee claims, or has previously claimed, small entity status. See 37 CFR 1.27.

LOSS OF ENTITLEMENT TO SMALL ENTITY STATUS
☐ Patentee is no longer entitled to small entity status. See 37 CFR 1.27(g)

NOT Small Entity		Small Entity	
Fee	Code	Fee	Code
◉ 3 ½ year	(1551)	○ 3 ½ year	(2551)
○ 7 ½ year	(1552)	○ 7 ½ year	(2552)
○ 11 ½ year	(1553)	○ 11 ½ year	(2553)

SURCHARGE
The surcharge required by 37 CFR 1.20(i)(2) (Fee Code 1558) must be paid as a condition of accepting unintentionally delayed payment of the maintenance fee.

MAINTENANCE FEE (37 CFR 1.20(e)-(g))
The appropriate maintenance fee must be submitted with this petition.

STATEMENT
THE UNDERSIGNED CERTIFIES THAT THE DELAY IN PAYMENT OF THE MAINTENANCE FEE TO THIS PATENT WAS UNINTENTIONAL

PETITIONER(S) REQUEST THAT THE DELAYED PAYMENT OF THE MAINTENANCE FEE BE ACCEPTED AND THE PATENT REINSTATED

THIS PORTION MUST BE COMPLETED BY THE SIGNATORY OR SIGNATORIES

37 CFR 1.378(d) states: "Any petition under this section must be signed by an attorney or agent registered to practice before the Patent and Trademark Office, or by the patentee, the assignee, or other party in interest."

I certify, in accordance with 37 CFR 1.4(d)(4) that I am

◉ An attorney or agent registered to practice before the Patent and Trademark Office

○ A sole patentee

○ A joint patentee; I certify that I am authorized to sign this submission on behalf of all the other patentees.

○ A joint patentee; all of whom are signing this e-petition

○ The assignee of record of the entire interest

Patent Practitioner			
A signature of the applicant or representative is required in accordance with 37 CFR 1.33 and 10.18. Please see 37 CFR 1.4(d) for the form of the signature			
Signature	/Douglas E. Jackson/	Date (YYYY-MM-DD)	2010-02-19
Name	Douglas E. Jackson	Registration Number	28518

This collection of information is required by 37 CFR 1.378(c). The information is required to obtain or retain a benefit by the public which is to file (and by the USPTO to process) an application. Confidentiality is governed by 35 U.S.C. 122 and 37 CFR 1.11 and 1.14. This collection is estimated to take 1 hour to complete, including gathering, preparing, and submitting the completed application form to the USPTO. Time will vary depending upon the individual case. Any comments on the amount of time you require to complete this form and/ or suggestions for reducing this burden, should be sent to the Chief Information Officer, U.S. Patent and Trademark Office, U.S. Department of Commerce, P.O. Box 1450, Alexandria, VA 22313-1450. DO NOT SEND FEES OR COMPLETED FORMS TO THIS ADDRESS. **This form can only be used when in conjunction with EFS-Web. If this form is mailed to the USPTO, it may cause delays in reinstating the patent.**

Privacy Act Statement

The Privacy Act of 1974 (P.L. 93-579) requires that you be given certain information in connection with your submission of the attached form related to a patent application or patent. Accordingly, pursuant to the requirements of the Act, please be advised that: (1) the general authority for the collection of this information is 35 U.S.C. 2(b)(2); (2) furnishing of the information solicited is voluntary; and (3) the principal purpose for which the information is used by the U.S. Patent and Trademark Office is to process and/or examine your submission related to a patent application or patent. If you do not furnish the requested information, the U.S. Patent and Trademark Office may not be able to process and/or examine your submission, which may result in termination of proceedings or abandonment of the application or expiration of the patent.

The information provided by you in this form will be subject to the following routine uses:

1. The information on this form will be treated confidentially to the extent allowed under the Freedom of Information Act (5 U.S.C. 552) and the Privacy Act (5 U.S.C. 552a). Records from this system of records may be disclosed to the Department of Justice to determine whether the Freedom of Information Act requires disclosure of these records.

2. A record from this system of records may be disclosed, as a routine use, in the course of presenting evidence to a court, magistrate, or administrative tribunal, including disclosures to opposing counsel in the course of settlement negotiations.

3. A record in this system of records may be disclosed, as a routine use, to a Member of Congress submitting a request involving an individual, to whom the record pertains, when the individual has requested assistance from the Member with respect to the subject matter of the record.

4. A record in this system of records may be disclosed, as a routine use, to a contractor of the Agency having need for the information in order to perform a contract. Recipients of information shall be required to comply with the requirements of the Privacy Act of 1974, as amended, pursuant to 5 U.S.C. 552a(m).

5. A record related to an International Application filed under the Patent Cooperation Treaty in this system of records may be disclosed, as a routine use, to the International Bureau of the World Intellectual Property Organization, pursuant to the Patent Cooperation Treaty.

6. A record in this system of records may be disclosed, as a routine use, to another federal agency for purposes of National Security review (35 U.S.C. 181) and for review pursuant to the Atomic Energy Act (42 U.S.C. 218(c)).

7. A record from this system of records may be disclosed, as a routine use, to the Administrator, General Services, or his/her designee, during an inspection of records conducted by GSA as part of that agency's responsibility to recommend improvements in records management practices and programs, under authority of 44 U.S.C. 2904 and 2906. Such disclosure shall be made in accordance with the GSA regulations governing inspection of records for this purpose, and any other relevant (i.e., GSA or Commerce) directive. Such disclosure shall not be used to make determinations about individuals.

8. A record from this system of records may be disclosed, as a routine use, to the public after either publication of the application pursuant to 35 U.S.C. 122(b) or issuance of a patent pursuant to 35 U.S.C. 151. Further, a record may be disclosed, subject to the limitations of 37 CFR 1.14, as a routine use, to the public if the record was filed in an application which became abandoned or in which the proceedings were terminated and which application is referenced by either a published application, an application open to public inspections or an issued patent.

9. A record from this system of records may be disclosed, as a routine use, to a Federal, State, or local law enforcement agency, if the USPTO becomes aware of a violation or potential violation of law or regulation.

UNITED STATES PATENT AND TRADEMARK OFFICE

Commissioner for Patents
United States Patent and Trademark Office
P.O. Box 1450
Alexandria, VA 22313-1450
www.uspto.gov

In re Patent No. 6823737
Issue Date: November 30,2004
Application No. 09874235
Filed: June 6,2001
Attorney Docket No. REC-3651

:
:DECISION GRANTING PETITION
:UNDER 37 CFR 1.378(c)
:

This is a decision on the electronic petition, filed February 19,2010 ,under 37 CFR 1.378(c) to accept the unintentionally delayed payment of the 3.5 year maintenance fee for the above-identified patent.

The petition is **GRANTED**.

The maintenance fee is accepted, and the above-identified patent reinstated as of February 19,2010 . This decision also constitutes notice that the fee has been accepted. An electronic copy of the petition and this decision has been created as an entry in the Image File Wrapper. Nevertheless, petitioner should print and retain an independent copy.

Telephone inquiries related to this electronic decision should be directed to the Electronic Business Center at 1-866-217-9197.

UNITED STATES PATENT AND TRADEMARK OFFICE

COMMISSIONER FOR PATENTS
UNITED STATES PATENT AND TRADEMARK OFFICE
P.O. BOX 1450
ALEXANDRIA, VA 22313-1450
www.uspto.gov

NOV 23 2003

Benoit Castel
745 South 23rd Street
Arlington, VA 22202

In re Application of	:
Edvard SMITH et al	:
Serial No.: 09/874,270	: Decision on Petition
Filed: June 6, 2001	:
Attorney Docket No.: 1506-1049-1	

This is in response to applicants' "Petition under 37 CFR 1.181 to Withdraw the Holding of Abandonment" filed on May 23, 2003. The delay is regretted.

On September 3, 2002, an Office action was mailed. On May 6, 2003, a Notice of Abandonment for failure to timely file a response was mailed. On May 23, 2003, the present petition was filed. Applicants assert that a response was timely filed with the Office. The petition was accompanied with a copy of the postcard receipt bears the U.S. PTO OIPE stamp of October 1, 2002, and a copy of the complete response which was previously filed on October 1, 2003.

Applicants' statement and evidence show that a amendment was timely filed with the Office on October 1, 2002 in response to the office action mailed September 3, 2002. Accordingly, the petition is Granted.

The application has been returned to pending status. The amendment previously filed October 1, 2002 will be entered and the application will be forwarded to examiner for consideration.

Petition GRANTED.

Should there be any questions with respect to this decision, please contact Cecilia Tsang, by mail addressed to: Director, Technology Center 1600, Alexandria, VA 22313-1450, or by telephone at (703) 308-0254 or by facsimile transmission at (703) 305-7230.

Cecilia Tsang for
John Doll
Director, Technology Center 1600

COMMISSIONER FOR PATENTS
UNITED STATES PATENT AND TRADEMARK OFFICE
P.O. BOX 1450
ALEXANDRIA, VA 22313-1450
www.uspto.gov

NOV 23 2003

DOCKETED
For-Up 2-23-04
sh

Benoit Castel
745 South 23rd Street
Arlington, VA 22202

In re Application of
Edvard SMITH et al
Serial No.: 09/874,270
Filed: June 6, 2001
Attorney Docket No.: 1506-1049-1

: Decision on Petition

This is in response to applicants' "Petition under 37 CFR 1.181 to Withdraw the Holding of Abandonment" filed on May 23, 2003. The delay is regretted.

On September 3, 2002, an Office action was mailed. On May 6, 2003, a Notice of Abandonment for failure to timely file a response was mailed. On May 23, 2003, the present petition was filed. Applicants assert that a response was timely filed with the Office. The petition was accompanied with a copy of the postcard receipt bears the U.S. PTO OIPE stamp of October 1, 2002, and a copy of the complete response which was previously filed on October 1, 2003.

Applicants' statement and evidence show that a amendment was timely filed with the Office on October 1, 2002 in response to the office action mailed September 3, 2002. Accordingly, the petition is Granted.

The application has been returned to pending status. The amendment previously filed October 1, 2002 will be entered and the application will be forwarded to examiner for consideration.

Petition GRANTED.

Should there be any questions with respect to this decision, please contact Cecilia Tsang, by mail addressed to: Director, Technology Center 1600, Alexandria, VA 22313-1450, or by telephone at (703) 308-0254 or by facsimile transmission at (703) 305-7230.

Cecilia Tsang for
John Doll
Director, Technology Center 1600

UNITED STATES PATENT AND TRADEMARK OFFICE

Commissioner for Patents
United States Patent and Trademark Office
Washington, D.C. 20231
www.uspto.gov

Paper No. 7

JAECKLE FLEISCHMANN & MUGEL, LLP
39 STATE STREET
ROCHESTER NY 14614-1310

COPY MAILED

JUL 15 2002

OFFICE OF PETITIONS

In re Application of Fortin, Petronis, Berrill, Barota, Allen, and Moon Application No. 09/874,271 Filed: June 5, 2001 Attorney Docket No. 87711.080301 For: High-Performance Location Management Platform	DECISION GRANTING PETITION UNDER 37 CFR 1.47(a)

This is in response to the petition under 37 CFR 1.47(a), filed March 18, 2002 (certificate of mailing March 6, 2002).

The petition is granted.

Petitioners have shown that the non-signing inventor, Mr. Fortin, has refused to join in the filing of the above-identified application after having been presented with the application papers. Specifically, petitioners' attorney stated that the application papers were sent to Mr. Fortin, on at least two occasions; however, Mr. Fortin did not sign the Declaration. Additionally, petitioners' attorney indicated that he placed a phone call to Mr. Fortin and spoke with his spouse, but Mr. Fortin did not return the telephone call.

The above-identified application and papers have been reviewed and found in compliance with 37 CFR 1.47(a). This application is hereby accorded Rule 1.47(a) status.

As provided in Rule 1.47(c), this Office will forward notice of this application's filing to the non-signing inventor at the address given in the present petition. Notice of the filing of this application will also be published in the Official Gazette.

The application file is being forwarded to Technology Center 2100 for examination in due course.

Telephone inquiries regarding this decision should be directed to the undersigned at (703) 306-5589.

Christina Tartera Donnell

Christina Tartera Donnell
Petitions Attorney
Office of Petitions
Office of the Deputy Commissioner
for Patent Examination Policy

UNITED STATES PATENT AND TRADEMARK OFFICE

Commissioner for Patents
United States Patent and Trademark Office.
Washington, D.C. 20231
www.uspto.gov

Stephen E. Fortin
10 Bear Club Crossing
Saratoga Springs, NY 12866-5787

COPY MAILED

JUL 1 5 2002

OFFICE OF PETITIONS

In re Application of
Fortin, Petronis, Berrill,
Barota, Allen, and Moon
Application No. 09/874,271
Filed: June 5, 2001
Attorney Docket No.
87711.080301
For: High-Performance Location
Management Platform

LETTER

Mr. Fortin:

You are named as a joint inventor in the above-identified United States patent application filed under the provisions of 35 U.S.C. 116 (United States Code) and 37 CFR 1.47(a), Rules of Practice in Patent Cases. Should a patent be granted on the application you will be designated therein as a joint inventor.

As a named inventor you are entitled to inspect any paper in the file wrapper of the application, order copies of all or any part thereof (at a prepaid cost per 37 CFR 1.19) or make your position of record in the application. Alternatively, you may arrange to do any of the preceding through a registered patent attorney or agent presenting written authorization from you. If you care to join the application, counsel of record (see below) would presumably assist you. Joining in the application would entail the filing of an appropriate oath or declaration by you pursuant to 37 CFR 1.63.

Telephone inquiries regarding this communication should be directed to Petitions Attorney Christina Tartera Donnell at (703) 306-5589. Requests for information regarding your application should be directed to the File Information Unit at (703) 308-2733. Information regarding how to pay for and order a copy of the application, or a specific paper in the application, should be directed to Certification Division at (703) 308-9726 or 1-800-972-6382 (outside the Washington D.C. area).

Christina Tartera Donnell

Christina Tartera Donnell
Petitions Attorney
Office of Petitions
Office of the Deputy Commissioner
for Patent Examination Policy

Jaeckle Fleischmann & Mugel, LLP
39 State Street
Rochester, NY 14614-1310

UNITED STATES
PATENT AND
TRADEMARK OFFICE

UNDER SECRETARY OF COMMERCE FOR INTELLECTUAL PROPERTY
AND DIRECTOR OF THE UNITED STATES PATENT AND TRADEMARK OFFICE
PO BOX 1450, ALEXANDRIA, VA 22313-1450
WWW.USPTO.GOV

SEP 24 2003

#10

ANTONELLI, TERRY, STOUT & KRAUS, LLP
1300 NORTH SEVENTEENTH STREET
SUITE 1800
ARLINGTON VA 22209-9889

In re Application of	:
Teruyuki Ninomiya et al	:
Serial No.: 09/874,276	: WITHDRAWAL OF ABANDONMENT
Filed: June 6, 2001	:
Attorney Docket No.: 396.40193X99	:

This is in response to the petition under 37 CFR 1.181, filed July 16, 2002, requesting withdrawal of the holding of abandonment of the above identified application. The delay in acting on this petition is regretted.

A review of the file history shows that the examiner mailed a Notice of Allowance and Issue Fee Due and a Notice of Allowability to applicants on January 31, 2002, setting a three month statutory period for payment of the Issue Fee. A Notice of Abandonment was mailed to applicants on May 31, 2002, when no Issue Fee had been received. Applicant states that the Notices were never received and provides statements and docket record evidence to confirm non-receipt. In addition, the mailed copy of the Notices was returned to the Office by the US Postal Service for unknown reasons and the Office failed to remail the Notices. In view of the evidence presented, the Notice of Abandonment is withdrawn and the application is restored to pending status with the mailing of this decision.

Applicants' petition is **GRANTED**.

The application will be forwarded to the examiner for mailing of a new Notice of Allowance and Issue Fee Due and a new Notice of Allowability.

Should there be any questions with regard to this letter please contact William R. Dixon, Jr. by letter addressed to the Director, Technology Center 1600, PO BOX 1450, ALEXANDRIA, VA 22313-1450, or by telephone at (703) 308-3824 or by facsimile transmission at (703) 305-7230.

Bruce M. Kisliuk
Director, Technology Center 1600

UNITED STATES PATENT AND TRADEMARK OFFICE

Commissioner for Patents
United States Patent and Trademark Office
P.O. Box 1450
Alexandria, VA 22313-1450
www.uspto.gov

FISH & NEAAVE IP GROUP
ROPES & GRAY LLP
ONE INTERNATIONAL PLACE
BOSTON, MA 02110-2624

COPY MAILED

FEB 09 2006

OFFICE OF PETITIONS

In re Application of	:
Robert F. Rioux	:
Application No. 09/874,302	: DECISION GRANTING PETITION
Filed: June 5, 2001	: UNDER 37 CFR 1.313(c)(2)
Attorney Docket No. MIY-P01-011	:

This is a decision on the petition, filed January 14, 2005, under 37 CFR 1.313(c)(2) to withdraw the above-identified application from issue after payment of the issue fee.

The petition is **GRANTED**.

The above-identified application is withdrawn from issue for consideration of a submission under 37 CFR 1.114 (request for continued examination). See 37 CFR 1.313(c)(2).

Petitioner is advised that the issue fee paid on October 29, 2004 in the above-identified application cannot be refunded. If, however, the above-identified application is again allowed, petitioner may request that it be applied towards the issue fee required by the new Notice of Allowance.[1]

Telephone inquiries should be directed to the undersigned at (571) 272-3218.

This matter is being referred to Technology Center AU 3743 for processing of the request for continued examination under 37 CFR 1.114 and for consideration of the Information Disclosure Statement (and the amendment filed April 21, 2005).

Frances Hicks
Frances Hicks
Petitions Examiner
Office of Petitions

---

[1] *The request to apply the issue fee to the new Notice may be satisfied by completing and returning the new Issue Fee Transmittal Form PTOL-85(b) (along with any balance due at the time of payment), which includes the following language thereon: "Commissioner for Patents is requested to apply the Issue Fee and Publication Fee (if any) or re-apply any previously paid issue fee to the application identified above." Petitioner is advised that, whether a fee is indicated as being due or not, the Issue Fee Transmittal Form* ***must*** *be completed and timely submitted to avoid abandonment. Note the language in bold text on the first page of the Notice of Allowance and Fee(s) Due (PTOL-85).*

UNITED STATES PATENT AND TRADEMARK OFFICE

COMMISSIONER FOR PATENTS
UNITED STATES PATENT AND TRADEMARK OFFICE
P.O. BOX 1450
ALEXANDRIA, VA 22313-1450
www.uspto.gov

SUGHRUE, MION, ZINN,
MACPEAK & SEAS, PLLC
2100 Pennsylvania Avenue, N.W.
Washington DC 20037

COPY MAILED
MAR 17 2006
OFFICE OF PETITIONS

In re Application of	:	
Inoue et al.	:	
Application No. 09/874,314	:	
Filed: June 6, 2001	:	DECISION ON
Attorney Docket Number:	:	
Q64575	:	

This is a decision in response to the Petition for Withdrawal of Holding of Abandonment Under 37 C.F.R. § 1.181, filed December 19, 2005, to withdraw the holding of abandonment in the above-identified application.

This Petition is **dismissed**.

Any further petition to revive the above-identified application must be submitted within TWO (2) MONTHS from the mail date of this decision. Extensions of time under 37 CFR 1.136(a) are permitted. The reconsideration request should include a cover letter entitled "Renewed Petition under 37 CFR 1.181." This is **not** final agency action within the meaning of 5 U.S.C. § 704.

The above-identified application became abandoned as a result of a Decision by the Board of Patent Appeals and Interferences ("the Board"), mailed September 29, 2005. No claims were allowed, and the period for seeking court review of the Decision expired on November 30, 2005. (Emphasis supplied).

Applicant files the instant petition and asserts that a response to the Decision to wit - a Request for Continued Examinaion and an Amendment, were timely filed on November 29, 2005.

A review of the application file reveals that there were only two (2) claims pending in the application, and both claims were rejected by the Examiner. Both claims were subsequently upheld on appeal by the Board. As such, no claims were allowed.

As provided in the MPEP § 1214.06 (I) (Rev. 2 August 2005), when no claims stand allowed, "the proceedings in an application or ex parte reexamination proceeding are terminated as of the date of the expiration of the time for filing court action. The application is no longer considered as pending. It is to be stamped abandoned and sent to abandoned files."

Applicant is advised that there is no option to file an RCE in response to the Board's decision where no claims stand allowed. The application is abandoned and must be revived in order to continue examination.

Further correspondence with respect to this matter should be addressed as follows:

By mail: Commissioner for Patents
PO Box 1450
Alexandria, VA 22313-1450

By FAX: (571) 273-8300
Attn: Office of Petitions

By hand: Customer Service Window
Randolph Building
401 Dulany Street
Alexandria, VA 22314

Telephone inquiries concerning this matter should be directed to the undersigned at (571) 272-3232.

Derek L. Woods
Attorney
Office of Petitions

UNITED STATES PATENT AND TRADEMARK OFFICE

Commissioner for Patents
United States Patent and Trademark Office
P.O. Box 1450
Alexandria, VA 22313-1450
www.uspto.gov

SUGHRUE, MION, ZINN,
MACPEAK & SEAS, PLLC
2100 Pennsylvania Avenue, N.W.
Washington DC 20037

COPY MAILED

MAR 27 2006

OFFICE OF PETITIONS

In re Application of	:	
Inoue et al.	:	
Application No. 09/874,314	:	CORRECTED
Filed: June 6, 2001	:	DECISION
Attorney Docket Number:	:	
Q64575	:	

This is a corrected decision in response to the Petition for Withdrawal of Holding of Abandonment Under 37 C.F.R. § 1.181, filed December 19, 2005, to withdraw the holding of abandonment in the above-identified application.

This Petition is **granted**.

The above-identified application became abandoned as a result of a Decision by the Board of Patent Appeals and Interferences ("the Board"), mailed September 29, 2005. No claims were allowed, and the period for seeking court review of the Decision expired on November 30, 2005. (Emphasis supplied).

Applicant files the instant petition and asserts that a response to the Decision to wit - a Request for Continued Examinaion ("RCE") and an Amendment, were timely filed on November 29, 2005.

A review of the file reveals that Applicant is correct. A RCE and Amendment were timely filed on November 29, 2005[1].

[1] The filing of an RCE (accompanied by the fee and a submission) after a decision by the Board of Patent Appeals and Interferences, but before the filing of a Notice of Appeal to the Court of Appeals for the Federal Circuit (Federal Circuit) or the commencement of a civil action in federal district court, will also result in the finality of the rejection or action being withdrawn and the submission being considered. Generally, the time period for filing a notice of appeal to the Federal Circuit or for commencing a civil action is within two months of the Board's decision. See 37 CFR 1.304 and MPEP § 1216. Thus, an RCE filed within this two month time period and before the filing of a notice of appeal to the Federal Circuit or the commencement of a civil action would be timely filed. MPEP 706.07(h)

In view of the above the petition is granted. The file is being referred to Technology Center Art Unit 1771 for processing of the RCE and Amendment.

Telephone inquiries concerning this matter should be directed to the undersigned at (571) 272-3232.

Derek L. Woods
Attorney
Office of Petitions

UNITED STATES PATENT AND TRADEMARK OFFICE

Commissioner for Patents
United States Patent and Trademark Office
P.O. Box 1450
Alexandria, VA 22313-1450
www.uspto.gov

Joseph S. Tripoli
THOMSON Licensing, Inc.
Two Independence Way
P.O. Box 5312
Princeton NJ 08543

COPY MAILED

APR 24 2007

OFFICE OF PETITIONS

In re Application of	:	
Hirtzlin et al.	:	
Application No. 09/874,341	:	DECISION ON PETITION
Filed: 06-05-2001	:	
Attorney Docket No. PF000056	:	

This is a decision on the petition under 37 CFR 1.181, filed January 12, 2007, to withdraw the holding of abandonment for the above-identified application.

This application was held abandoned for failure to respond timely to the final Office Action mailed on May 12, 2006, which set a three-month shortened statutory period for reply. In the apparent absence of a timely filed response, the application was held abandoned and a Notice of Abandonment was mailed on November 14, 2006.

Petitioners asserted that they filed a timely response to the final Office action on Monday, November 13, 2006. A copy of the response in the form of a RCE, an amendment, and a request for an extension of time for response within the third month, bearing a certificate of transmission dated Monday, November 13, 2006, accompany the petition. Additionally, petitioners provided the Office with a copy of the Auto-Reply Facsimile Transmission and a copy of the sending unit report showing a successful transmission.

Upon a review of the record, the Office has located the RCE, an amendment, and a request for an extension of time for response within the third month (and fee) filed on Monday, November 13, 2006. As petitioners filed the reply and a three-month extension of time on the next business day succeeding the last day of the six-month statutory period for response pursuant to 37 CFR 1.7(a),[1] the petition is **granted**.

[1] When the day, or the last day fixed by statute or by or under this part for taking any action or paying any fee in the United States Patent and Trademark Office falls on Saturday, Sunday, or on a Federal holiday within the District of Columbia, the action may be taken, or the fee paid, on the next succeeding business day which is not a Saturday, Sunday, or a Federal holiday." 37 CFR 1.7(a).

The Notice of Abandonment was mailed in error and is hereby withdrawn. The application is restored to pending status in view of the fact that a response was timely filed and received on Monday, November 13, 2006.

The matter is being referred to the Technology Center Art Unit 2614 for a review of the reply submitted on Monday, November 13, 2006.

Telephone inquiries concerning this matter may be directed to the undersigned at (571) 272-3211.

Christina Tartera Donnell

Christina Tartera Donnell
Senior Petitions Attorney
Office of Petitions

PTO/SB/66 (03-09)
Approved for use through 03/31/2012. OMB 0651-0016
U.S. Patent and Trademark Office: U.S. DEPARTMENT OF COMMERCE
Under the Paperwork Reduction Act of 1995, no persons are required to respond to a collection of information unless it displays valid OMB control number.

PETITION TO ACCEPT UNINTENTIONALLY DELAYED PAYMENT OF MAINTENANCE FEE IN AN EXPIRED PATENT (37 CFR 1.378(c))

Patent Number	Issue Date (YYYY-MM-DD)	Application Number	Filing Date (YYYY-MM-DD)	Docket Number (if applicable)
6995004	2006-02-07	09874390	2001-06-04	4305/0J425

CAUTION: Maintenance fee (and surcharge, if any) payment must correctly identify: (1) the patent number and (2) the application number of the actual U.S. application leading to issuance of that patent to ensure the fee(s) is/are associated with the correct patent. 37 CFR 1.366(c) and (d).

SMALL ENTITY
☐ Patentee claims, or has previously claimed, small entity status. See 37 CFR 1.27.

LOSS OF ENTITLEMENT TO SMALL ENTITY STATUS
☐ Patentee is no longer entitled to small entity status. See 37 CFR 1.27(g)

NOT Small Entity		Small Entity	
Fee	Code	Fee	Code
◉ 3 ½ year	(1551)	○ 3 ½ year	(2551)
○ 7 ½ year	(1552)	○ 7 ½ year	(2552)
○ 11 ½ year	(1553)	○ 11 ½ year	(2553)

SURCHARGE
The surcharge required by 37 CFR 1.20(i)(2) (Fee Code 1558) must be paid as a condition of accepting unintentionally delayed payment of the maintenance fee.

MAINTENANCE FEE (37 CFR 1.20(e)-(g))
The appropriate maintenance fee must be submitted with this petition.

STATEMENT
THE UNDERSIGNED CERTIFIES THAT THE DELAY IN PAYMENT OF THE MAINTENANCE FEE TO THIS PATENT WAS UNINTENTIONAL

PETITIONER(S) REQUEST THAT THE DELAYED PAYMENT OF THE MAINTENANCE FEE BE ACCEPTED AND THE PATENT REINSTATED

THIS PORTION MUST BE COMPLETED BY THE SIGNATORY OR SIGNATORIES

37 CFR 1.378(d) states: "Any petition under this section must be signed by an attorney or agent registered to practice before the Patent and Trademark Office, or by the patentee, the assignee, or other party in interest."

I certify, in accordance with 37 CFR 1.4(d)(4) that I am

◉ An attorney or agent registered to practice before the Patent and Trademark Office

○ A sole patentee

○ A joint patentee; I certify that I am authorized to sign this submission on behalf of all the other patentees.

○ A joint patentee; all of whom are signing this e-petition

○ The assignee of record of the entire interest

Patent Practitioner			
A signature of the applicant or representative is required in accordance with 37 CFR 1.33 and 10.18. Please see 37 CFR 1.4(d) for the form of the signature			
Signature	/Kendal M. Sheets/	Date (YYYY-MM-DD)	2010-07-23
Name	Kendal M. Sheets	Registration Number	47077

This collection of information is required by 37 CFR 1.378(c). The information is required to obtain or retain a benefit by the public which is to file (and by the USPTO to process) an application. Confidentiality is governed by 35 U.S.C. 122 and 37 CFR 1.11 and 1.14. This collection is estimated to take 1 hour to complete, including gathering, preparing, and submitting the completed application form to the USPTO. Time will vary depending upon the individual case. Any comments on the amount of time you require to complete this form and/ or suggestions for reducing this burden, should be sent to the Chief Information Officer, U.S. Patent and Trademark Office, U.S. Department of Commerce, P.O. Box 1450, Alexandria, VA 22313-1450. DO NOT SEND FEES OR COMPLETED FORMS TO THIS ADDRESS. **This form can only be used when in conjunction with EFS-Web. If this form is mailed to the USPTO, it may cause delays in reinstating the patent.**

Privacy Act Statement

The Privacy Act of 1974 (P.L. 93-579) requires that you be given certain information in connection with your submission of the attached form related to a patent application or patent. Accordingly, pursuant to the requirements of the Act, please be advised that: (1) the general authority for the collection of this information is 35 U.S.C. 2(b)(2); (2) furnishing of the information solicited is voluntary; and (3) the principal purpose for which the information is used by the U.S. Patent and Trademark Office is to process and/or examine your submission related to a patent application or patent. If you do not furnish the requested information, the U.S. Patent and Trademark Office may not be able to process and/or examine your submission, which may result in termination of proceedings or abandonment of the application or expiration of the patent.

The information provided by you in this form will be subject to the following routine uses:

1. The information on this form will be treated confidentially to the extent allowed under the Freedom of Information Act (5 U.S.C. 552) and the Privacy Act (5 U.S.C. 552a). Records from this system of records may be disclosed to the Department of Justice to determine whether the Freedom of Information Act requires disclosure of these records.

2. A record from this system of records may be disclosed, as a routine use, in the course of presenting evidence to a court, magistrate, or administrative tribunal, including disclosures to opposing counsel in the course of settlement negotiations.

3. A record in this system of records may be disclosed, as a routine use, to a Member of Congress submitting a request involving an individual, to whom the record pertains, when the individual has requested assistance from the Member with respect to the subject matter of the record.

4. A record in this system of records may be disclosed, as a routine use, to a contractor of the Agency having need for the information in order to perform a contract. Recipients of information shall be required to comply with the requirements of the Privacy Act of 1974, as amended, pursuant to 5 U.S.C. 552a(m).

5. A record related to an International Application filed under the Patent Cooperation Treaty in this system of records may be disclosed, as a routine use, to the International Bureau of the World Intellectual Property Organization, pursuant to the Patent Cooperation Treaty.

6. A record in this system of records may be disclosed, as a routine use, to another federal agency for purposes of National Security review (35 U.S.C. 181) and for review pursuant to the Atomic Energy Act (42 U.S.C. 218(c)).

7. A record from this system of records may be disclosed, as a routine use, to the Administrator, General Services, or his/her designee, during an inspection of records conducted by GSA as part of that agency's responsibility to recommend improvements in records management practices and programs, under authority of 44 U.S.C. 2904 and 2906. Such disclosure shall be made in accordance with the GSA regulations governing inspection of records for this purpose, and any other relevant (i.e., GSA or Commerce) directive. Such disclosure shall not be used to make determinations about individuals.

8. A record from this system of records may be disclosed, as a routine use, to the public after either publication of the application pursuant to 35 U.S.C. 122(b) or issuance of a patent pursuant to 35 U.S.C. 151. Further, a record may be disclosed, subject to the limitations of 37 CFR 1.14, as a routine use, to the public if the record was filed in an application which became abandoned or in which the proceedings were terminated and which application is referenced by either a published application, an application open to public inspections or an issued patent.

9. A record from this system of records may be disclosed, as a routine use, to a Federal, State, or local law enforcement agency, if the USPTO becomes aware of a violation or potential violation of law or regulation.

UNITED STATES PATENT AND TRADEMARK OFFICE

Commissioner for Patents
United States Patent and Trademark Office
P.O. Box 1450
Alexandria, VA 22313-1450
www.uspto.gov

In re Patent No. 6995004
Issue Date: February 7,2006
Application No. 09874390
Filed: June 4,2001
Attorney Docket No. 4305/0J425

:DECISION GRANTING PETITION
:UNDER 37 CFR 1.378(c)

This is a decision on the electronic petition, filed July 23,2010 ,under 37 CFR 1.378(c) to accept the unintentionally delayed payment of the 3.5 year maintenance fee for the above-identified patent.

The petition is **GRANTED**.

The maintenance fee is accepted, and the above-identified patent reinstated as of July 23,2010 . This decision also constitutes notice that the fee has been accepted. An electronic copy of the petition and this decision has been created as an entry in the Image File Wrapper. Nevertheless, petitioner should print and retain an independent copy.

Telephone inquiries related to this electronic decision should be directed to the Electronic Business Center at 1-866-217-9197.

UNITED STATES PATENT AND TRADEMARK OFFICE

Commissioner for Patents
United States Patent and Trademark Office
P.O. Box 1450
Alexandria, VA 22313-1450
www.uspto.gov

In re Patent No. 6842178
Issue Date: January 11,2005
Application No. 09874414
Filed: June 5,2001
Attorney Docket No. GB 000069

:
:DECISION GRANTING PETITION
:UNDER 37 CFR 1.378(c)
:

This is a decision on the electronic petition, filed June 11,2009 ,under 37 CFR 1.378(c) to accept the unintentionally delayed payment of the 3.5 year maintenance fee for the above-identified patent.

The petition is **GRANTED**.

The maintenance fee is accepted, and the above-identified patent reinstated as of June 11,2009 .
This decision also constitutes notice that the fee has been accepted. An electronic copy of the petition and this decision has been created as an entry in the Image File Wrapper. Nevertheless, petitioner should print and retain an independent copy.

Telephone inquiries related to this electronic decision should be directed to the Electronic Business Center at 1-866-217-9197.

PTO/SB/66 (03-09)
Approved for use through 03/31/2012. OMB 0651-0016
U.S. Patent and Trademark Office: U.S. DEPARTMENT OF COMMERCE
Under the Paperwork Reduction Act of 1995, no persons are required to respond to a collection of information unless it displays valid OMB control number.

PETITION TO ACCEPT UNINTENTIONALLY DELAYED PAYMENT OF MAINTENANCE FEE IN AN EXPIRED PATENT (37 CFR 1.378(c))

Patent Number	Issue Date (YYYY-MM-DD)	Application Number	Filing Date (YYYY-MM-DD)	Docket Number (if applicable)
6842178	2005-01-11	09874414	2001-06-05	

CAUTION: Maintenance fee (and surcharge, if any) payment must correctly identify: (1) the patent number and (2) the application number of the actual U.S. application leading to issuance of that patent to ensure the fee(s) is/are associated with the correct patent. 37 CFR 1.366(c) and (d).

SMALL ENTITY
☐ Patentee claims, or has previously claimed, small entity status. See 37 CFR 1.27.

LOSS OF ENTITLEMENT TO SMALL ENTITY STATUS
☐ Patentee is no longer entitled to small entity status. See 37 CFR 1.27(g)

NOT Small Entity		Small Entity	
Fee	Code	Fee	Code
◉ 3 ½ year	(1551)	○ 3 ½ year	(2551)
○ 7 ½ year	(1552)	○ 7 ½ year	(2552)
○ 11 ½ year	(1553)	○ 11 ½ year	(2553)

SURCHARGE
The surcharge required by 37 CFR 1.20(i)(2) (Fee Code 1558) must be paid as a condition of accepting unintentionally delayed payment of the maintenance fee.

MAINTENANCE FEE (37 CFR 1.20(e)-(g))
The appropriate maintenance fee must be submitted with this petition.

STATEMENT
THE UNDERSIGNED CERTIFIES THAT THE DELAY IN PAYMENT OF THE MAINTENANCE FEE TO THIS PATENT WAS UNINTENTIONAL

PETITIONER(S) REQUEST THAT THE DELAYED PAYMENT OF THE MAINTENANCE FEE BE ACCEPTED AND THE PATENT REINSTATED

THIS PORTION MUST BE COMPLETED BY THE SIGNATORY OR SIGNATORIES

37 CFR 1.378(d) states: "Any petition under this section must be signed by an attorney or agent registered to practice before the Patent and Trademark Office, or by the patentee, the assignee, or other party in interest."

I certify, in accordance with 37 CFR 1.4(d)(4) that I am

◉ An attorney or agent registered to practice before the Patent and Trademark Office

○ A sole patentee

○ A joint patentee; I certify that I am authorized to sign this submission on behalf of all the other patentees.

○ A joint patentee; all of whom are signing this e-petition

○ The assignee of record of the entire interest

Patent Practitioner			
A signature of the applicant or representative is required in accordance with 37 CFR 1.33 and 10.18. Please see 37 CFR 1.4(d) for the form of the signature			
Signature	/Michael E Marion/	Date (YYYY-MM-DD)	2009-06-11
Name	Michael E. Marion	Registration Number	32266

This collection of information is required by 37 CFR 1.378(c). The information is required to obtain or retain a benefit by the public which is to file (and by the USPTO to process) an application. Confidentiality is governed by 35 U.S.C. 122 and 37 CFR 1.11 and 1.14. This collection is estimated to take 1 hour to complete, including gathering, preparing, and submitting the completed application form to the USPTO. Time will vary depending upon the individual case. Any comments on the amount of time you require to complete this form and/ or suggestions for reducing this burden, should be sent to the Chief Information Officer, U.S. Patent and Trademark Office, U.S. Department of Commerce, P.O. Box 1450, Alexandria, VA 22313-1450. DO NOT SEND FEES OR COMPLETED FORMS TO THIS ADDRESS. **This form can only be used when in conjunction with EFS-Web. If this form is mailed to the USPTO, it may cause delays in reinstating the patent.**

Privacy Act Statement

The Privacy Act of 1974 (P.L. 93-579) requires that you be given certain information in connection with your submission of the attached form related to a patent application or patent. Accordingly, pursuant to the requirements of the Act, please be advised that: (1) the general authority for the collection of this information is 35 U.S.C. 2(b)(2); (2) furnishing of the information solicited is voluntary; and (3) the principal purpose for which the information is used by the U.S. Patent and Trademark Office is to process and/or examine your submission related to a patent application or patent. If you do not furnish the requested information, the U.S. Patent and Trademark Office may not be able to process and/or examine your submission, which may result in termination of proceedings or abandonment of the application or expiration of the patent.

The information provided by you in this form will be subject to the following routine uses:

1. The information on this form will be treated confidentially to the extent allowed under the Freedom of Information Act (5 U.S.C. 552) and the Privacy Act (5 U.S.C. 552a). Records from this system of records may be disclosed to the Department of Justice to determine whether the Freedom of Information Act requires disclosure of these records.

2. A record from this system of records may be disclosed, as a routine use, in the course of presenting evidence to a court, magistrate, or administrative tribunal, including disclosures to opposing counsel in the course of settlement negotiations.

3. A record in this system of records may be disclosed, as a routine use, to a Member of Congress submitting a request involving an individual, to whom the record pertains, when the individual has requested assistance from the Member with respect to the subject matter of the record.

4. A record in this system of records may be disclosed, as a routine use, to a contractor of the Agency having need for the information in order to perform a contract. Recipients of information shall be required to comply with the requirements of the Privacy Act of 1974, as amended, pursuant to 5 U.S.C. 552a(m).

5. A record related to an International Application filed under the Patent Cooperation Treaty in this system of records may be disclosed, as a routine use, to the International Bureau of the World Intellectual Property Organization, pursuant to the Patent Cooperation Treaty.

6. A record in this system of records may be disclosed, as a routine use, to another federal agency for purposes of National Security review (35 U.S.C. 181) and for review pursuant to the Atomic Energy Act (42 U.S.C. 218(c)).

7. A record from this system of records may be disclosed, as a routine use, to the Administrator, General Services, or his/her designee, during an inspection of records conducted by GSA as part of that agency's responsibility to recommend improvements in records management practices and programs, under authority of 44 U.S.C. 2904 and 2906. Such disclosure shall be made in accordance with the GSA regulations governing inspection of records for this purpose, and any other relevant (i.e., GSA or Commerce) directive. Such disclosure shall not be used to make determinations about individuals.

8. A record from this system of records may be disclosed, as a routine use, to the public after either publication of the application pursuant to 35 U.S.C. 122(b) or issuance of a patent pursuant to 35 U.S.C. 151. Further, a record may be disclosed, subject to the limitations of 37 CFR 1.14, as a routine use, to the public if the record was filed in an application which became abandoned or in which the proceedings were terminated and which application is referenced by either a published application, an application open to public inspections or an issued patent.

9. A record from this system of records may be disclosed, as a routine use, to a Federal, State, or local law enforcement agency, if the USPTO becomes aware of a violation or potential violation of law or regulation.

UNITED STATES PATENT AND TRADEMARK OFFICE

Commissioner for Patents
United States Patent and Trademark Office
P.O. Box 1450
Alexandria, VA 22313-1450
www.uspto.gov

STEINBERG & RASKIN, P.C.
1140 AVENUE OF THE AMERICAS, 15th FLOOR
NEW YORK, NY 10036-5803

COPY MAILED

JAN 0 3 2006

OFFICE OF PETITIONS

In re Application of	:	
Paunonen	:	
Application No. 09/874,459	:	ON PETITION
Filed: June 5, 2001	:	
Attorney Docket No. 989.1032	:	

This is a decision on the petition under 37 CFR 1.181, filed April 29, 2005, to withdraw the holding of abandonment.

The petition is **granted.**

Facts:

A final Office action was mailed June 30, 2004.

An amendment and payment for a one month extension of time were filed in response to the final Office action on November 4, 2004.

A RCE and payment for a two month extension of time were filed on November 22, 2004. Unfortunately, the application number was incorrectly listed on both papers as 10/874,459. The papers were both placed in the file wrapper for 10/874,459. The fees paid were also credited to 10/874,459.

The examiner mailed an Advisory Action on January 4, 2005, based on the November 4, 2004 amendment not placing the application in condition for allowance.

A Notice of Abandonment was mailed on April 19, 2005.

Analysis:

At the discretion of the Commissioner, if a paper having an incorrect serial number contains sufficient information to identify the correct application and the paper was timely received at the PTO, the holding of abandonment may be withdrawn. In reviewing the papers which were submitted, it is concluded that there was sufficient information thereon to associate the papers with the instant file. In view of the above, the RCE and extension of time are considered timely filed.

Additionally, the RCE and extension of time fee are considered to have been timely paid since they were timely received but applied to another application. The fees will be appropriately applied and credited to the instant application.

The Notice of Abandonment is hereby vacated and the holding of abandonment withdrawn.

The examiner will be informed the application has been revived so that the application may be further examined in due course.

Copied from 09187459 on 01/13/2006

Telephone inquiries may be directed to Petitions Attorney Steven Brantley at (571) 272-3203.

Charles Steven Brantley
Petitions Attorney
Office of Petitions

Copied from 09187459 on 01/13/2006

UNITED STATES PATENT AND TRADEMARK OFFICE

COMMISSIONER FOR PATENTS
UNITED STATES PATENT AND TRADEMARK OFFICE
P.O. BOX 1450
ALEXANDRIA, VA 22313-1450
www.uspto.gov

Paper No.

NAVAL UNDERSEA WARFARE CENTER
DIVISION NEWPORT
OFFICE OF COUNSEL, BLDG 112T
1176 HOWELL STREET
NEWPORT, RI 02841-1708

COPY MAILED

MAR 0 1 2004

OFFICE OF PETITIONS

In re Application of	:	
James C. Butts et al	:	
Application No. 09/874,465	:	ON PETITION
Filed: June 4, 2001	:	
Attorney Docket No. 78757	:	

This is a decision on the petition under 37 CFR 1.137(b), filed January 28, 2004, to revive the above-identified application.

The petition is **GRANTED**.

The above-identified application became abandoned for failure to submit the issue fee/publication fee in a timely manner in reply to the Notice of Allowance mailed September 16, 2002, which set a statutory period for reply of three (3) months. Accordingly, the above-identified application became abandoned on December 17, 2002.

Telephone inquiries concerning this decision should be directed to Wan Laymon at (703) 305-9282.

The application file is being forwarded to Technology Center AU 3641.

Wan Laymon

Wan Laymon
Petitions Examiner
Office of Petitions
Office of the Deputy Commissioner
for Patent Examination Policy

UNITED STATES PATENT AND TRADEMARK OFFICE

COMMISSIONER FOR PATENTS
UNITED STATES PATENT AND TRADEMARK OFFICE
WASHINGTON, DC 20231
www.uspto.gov

Paper No. 3

BEYER WEAVER & THOMAS LLP
P.O. BOX 778
BERKELEY CA 94704-0778

MAILED

DEC 26 2002

DIRECTOR'S OFFICE
TECHNOLOGY CENTER 2600

In re Application of:
Ji Zhang et al
Application No.: 09/874,467
Filed: June 4, 2001
For: **EFFICIENT SYSTEMS AND METHODS FOR TRANSMITTING COMPRESSED VIDEO DATA HAVING DIFFERENT RESOLUTIONS**

DECISION ON REQUEST TO WITHDRAW AS ATTORNEY

This is a decision on the Request To Withdraw from Representation filed November 5, 2002.

A grantable request to withdraw as attorney of record should indicate thereon the present mailing addresses of the attorney(s) who is/are withdrawing from the record and of the applicant. The request for withdrawal must be signed by every attorney seeking to withdraw or contain a clear indication that one attorney is signing on behalf of another/others. A request to withdraw will not be approved unless at least 30 (thirty) days would remain between the date of approval and the later of the expiration date of a time to file a response or the expiration date of the maximum time period which can be extended under 37 C.F.R. 1.136(a). The effective date of withdrawal being the date of decision and not the date of request. See M.P.E.P. 402.06. 37 C.F.R. 1.36 further requires that the applicant or patent owner be notified of the withdrawal of the attorney or agent.

The signer of the petition, William J. Plut, is not appointed as an attorney or agent of record since the petitioner's limited recognition under 37 CFR 10.9(b) expired June 10, 2002.
For the above stated reasons, the request is **DISMISSED AS MOOT**.

All future communications from the Office will continue to be directed to the above-listed address unless the Office receives proper notification of a change in Power of Attorney and/or correspondence address.

Krista Zele
Special Program Examiner
Technology Center 2600
Communications & Information Processing
(703) 305-4701

COPY OF PAPERS
ORIGINALLY FILED

3300

SECTOR

AA

Dkt. 59597-E/JPW/AJM

JAN 22 2002
PATENT & TRADEMARK OFFICE

IN THE UNITED STATES PATENT AND TRADEMARK OFFICE

Applicants	:	Neil T. Parkin and Rainer A. Ziermann
U.S. Serial No.	:	09/874,472
Filed	:	June 4, 2001
For	:	MEANS AND METHODS FOR MONITORING PROTEASE INHIBITOR ANTIRETROVIRAL THERAPY AND GUIDING THERAPEUTIC DECISIONS IN THE TREATMENT OF HIV/AIDS

1185 Avenue of the Americas
New York, New York 10036
November 16, 2001

Assistant Commissioner For Patents
Washington, D.C. 20231

ATTN: Box Missing Parts

SIR:

COMMUNICATION IN RESPONSE TO
AUGUST 17, 2001 NOTICE TO FILE MISSING PARTS
AND PETITION FOR A ONE-MONTH EXTENSION OF TIME

This Communication is submitted in response to an August 17, 2001 Notice To File Missing Parts Of Nonprovisional Application issued in connection with the above-identified application. A response to the Notice was originally due on October 17, 2001. Applicants hereby request a one-month extension of time for responding. The fee for a one-month extension is $55.00 for a small entity, and small entity status has already been established. A check for $120.00 is enclosed, which amount includes the $55.00 extension fee and a $65.00 declaration surcharge. A response to the Notice is now due on November 17, 2001, and accordingly, this Communication is being timely filed.

01/25/2002 BSAYASI1 00000096 09874472

02 FC:215 55.00 OP

The Notice, a copy of which is attached hereto as Exhibit A, indicates that the oath or declaration is unsigned. In response, applicants submit as Exhibit B a signed Declaration and Power of Attorney pursuant to 37 C.F.R. §1.53(f). In compliance with 37 C.F.R. §1.63, the Declaration refers to the application's above-identified serial number and filing date. The Notice also requires payment of a $65.00 surcharge, and this surcharge amount is included in the enclosed check for $120.00.

No fee, other than the enclosed $120.00 sum, is deemed necessary in connection with the filing of this Communication. If any additional fee is required, authorization is hereby given to charge the amount of such fee to Deposit Account No. 03-3125.

Respectfully submitted,

John P. White
Registration No. 28,678
Alan J. Morrison
Registration No. 37,399
Attorneys for Applicants
Cooper & Dunham, LLP
1185 Avenue of the Americas
New York, New York 10036
(212) 278-0400

I hereby certify that this correspondence is being deposited this date with the U.S. Postal Service with sufficient postage as first class mail in an envelope addressed to:
Assistant Commissioner for Patents, Washington, D.C. 20231.

11/16/01

Alan J. Morrison — Date
Reg. No. 37,399

UNITED STATES PATENT AND TRADEMARK OFFICE

COMMISSIONER FOR PATENTS
UNITED STATES PATENT AND TRADEMARK OFFICE
WASHINGTON, D.C. 20231
www.uspto.gov

APPLICATION NUMBER	FILING/RECEIPT DATE	FIRST NAMED APPLICANT	ATTORNEY DOCKET NUMBER
09/874,472	06/04/2001	Neil T. Parkin	2793/59597-E

CONFIRMATION NO. 9210

FORMALITIES LETTER

OC000000006439238

Cooper & Dunham, LLP
1185 Avenue of the Americas
New York, NY 10036

OIPE JC86
JAN 2 2 2002
PATENT & TRADEMARK OFFICE

Date Mailed: 08/17/2001

NOTICE TO FILE MISSING PARTS OF NONPROVISIONAL APPLICATION

FILED UNDER 37 CFR 1.53(b)

Filing Date Granted

An application number and filing date have been accorded to this application. The item(s) indicated below, however, are missing. Applicant is given **TWO MONTHS** from the date of this Notice within which to file all required items and pay any fees required below to avoid abandonment. Extensions of time may be obtained by filing a petition accompanied by the extension fee under the provisions of 37 CFR 1.136(a).

- The oath or declaration is unsigned.
- To avoid abandonment, a late filing fee or oath or declaration surcharge as set forth in 37 CFR 1.16(e) of $65 for a small entity in compliance with 37 CFR 1.27, must be submitted with the missing items identified in this letter.
- **The balance due by applicant is $ 65.**

The application is informal since it does not comply with the regulations for the reason(s) indicated below.

The required item(s) identified below must be timely submitted to avoid abandonment:

- Substitute drawings in compliance with 37 CFR 1.84 because:
    - drawing sheets do not have the appropriate margin(s) (see 37 CFR 1.84(g)). Each sheet must include a top margin of at least 2.5 cm. (1 inch), a left side margin of at least 2.5 cm. (1 inch), a right side margin of at least 1.5 cm. (5/8 inch), and a bottom margin of at least 1.0 cm. (3/8 inch);
- This application clearly fails to comply with the requirements of 37 C.F.R. 1.821-1.825. Applicant's attention is directed to the final rulemaking notice published at 55 FR 18230 (May 1, 1990), and 1114 OG 29 (May 15, 1990). If the effective filing date is on or after July 1, 1998, see the final rulemaking notice published at 63 FR 29620 (June 1, 1998) and 1211 OG 82 (June 23, 1998). If the effective filing date is on or after September 8, 2000, see the final rulemaking notice published in the Federal Register at 65 FR 54604 (September 8, 2000) and 1238 OG 145 (September 19, 2000). Applicant must provide an initial computer readable form (CRF) copy of the "Sequence Listing", an initial paper or compact disc copy of the "Sequence Listing", as well as an amendment directing its entry into the application. Applicant must also provide a statement that the content of the sequence listing information recorded in computer readable

01/25/2002 BSAYAS11 00000036 09874472
01 FC:205 65.00 OP

form is identical to the written (on paper or compact disc) sequence listing and, where applicable, includes no new matter, as required by 37 CFR 1.821(e), 1.821(f), 1.821(g), 1.825(b), or 1.825(d). If applicant desires the sequence listing in the instant application to be identical with that of another application on file in the U.S. Patent and Trademark Office, such request in accordance with 37 CFR 1.821(e) may be submitted in lieu of a new CRF.

For questions regarding compliance to these requirements, please contact:

- **For Rules Interpretation, call (703) 308-4216**
- **To Purchase PatentIn Software, call (703) 306-2600**
- **For PatentIn Software Program Help, call (703) 306-4119 or e-mail at patin21help@uspto.gov or patin3help@uspto.gov**

A copy of this notice MUST be returned with the reply.

Customer Service Center
Initial Patent Examination Division (703) 308-1202
PART 2 - COPY TO BE RETURNED WITH RESPONSE

09874472 .101702

UNITED STATES PATENT AND TRADEMARK OFFICE

COMMISSIONER FOR PATENTS
UNITED STATES PATENT AND TRADEMARK OFFICE
WASHINGTON, D.C. 20231
www.uspto.gov

APPLICATION NUMBER	FILING/RECEIPT DATE	FIRST NAMED APPLICANT	ATTORNEY DOCKET NUMBER
09/874,472	06/04/2001	Neil T. Parkin	59597-E/JPW/AJM

OIPE JC21
OCT 17 2002
PATENT & TRADEMARK OFFICE

CONFIRMATION NO. 9210

FORMALITIES LETTER

OC000000008082574

John P. White
Cooper & Dunham, LLP
1185 Avenue of the Americas
New York, NY 10036

Date Mailed: 05/10/2002

NOTICE TO FILE CORRECTED APPLICATION PAPERS

Filing Date Granted

This application has been accorded an Application Number and Filing Date. The application, however, is informal since it does not comply with the regulations for the reason(s) indicated below. Applicant is given **TWO MONTHS** from the date of this Notice within which to correct the informalities indicated below. Extensions of time may be obtained by filing a petition accompanied by the extension fee under the provisions of 37 CFR 1.136(a)

The required item(s) identified below must be timely submitted to avoid abandonment:

- Substitute drawings in compliance with 37 CFR 1.84 because:
  - drawing sheets do not have the appropriate margin(s) (see 37 CFR 1.84(g)). Each sheet must include a top margin of at least 2.5 cm. (1 inch), a left side margin of at least 2.5 cm. (1 inch), a right side margin of at least 1.5 cm. (5/8 inch), and a bottom margin of at least 1.0 cm. (3/8 inch);

- This application clearly fails to comply with the requirements of 37 C.F.R. 1.821-1.825. Applicant's attention is directed to the final rulemaking notice published at 55 FR 18230 (May 1, 1990), and 1114 OG 29 (May 15, 1990). If the effective filing date is on or after July 1, 1998, see the final rulemaking notice published at 63 FR 29620 (June 1, 1998) and 1211 OG 82 (June 23, 1998). If the effective filing date is on or after September 8, 2000, see the final rulemaking notice published in the Federal Register at 65 FR 54604 (September 8, 2000) and 1238 OG 145 (September 19, 2000). Applicant must provide an initial computer readable form (CRF) copy of the "Sequence Listing", an initial paper or compact disc copy of the "Sequence Listing", as well as an amendment directing its entry into the application. Applicant must also provide a statement that the content of the sequence listing information recorded in computer readable form is identical to the written (on paper or compact disc) sequence listing and, where applicable, includes no new matter, as required by 37 CFR 1.821(e), 1.821(f), 1.821(g), 1.825(b), or 1.825(d). If applicant desires the sequence listing in the instant application to be identical with that of another application on file in the U.S. Patent and Trademark Office, such request in accordance with 37 CFR 1.821(e) may be submitted in lieu of a new CRF.

For questions regarding compliance to these requirements, please contact:

- **For Rules Interpretation, call (703) 308-4216**
- **To Purchase PatentIn Software, call (703) 306-2600**

- **For Patentin Software Program Help, call (703) 308-[illegible]119 or e-mail at patin21help@uspto.gov or patin3help@uspto.gov**

A copy of this notice MUST be returned with the reply.

Customer Service Center
Initial Patent Examination Division (703) 308-1202
PART 2 - COPY TO BE RETURNED WITH RESPONSE

UNITED STATES PATENT AND TRADEMARK OFFICE

COMMISSIONER FOR PATENTS
UNITED STATES PATENT AND TRADEMARK OFFICE
WASHINGTON, D.C. 20231
www.uspto.gov

Paper No.

In re Application of Neil T. Parkin et al :
: DECISION GRANTING PETITION
Application No. 09/874,472 : TO REMAIL AN OFFICE
Filed: June 4, 2001 : COMMUNICATION AND RESTART
Attorney Docket No. 59597/-E/JPW/AJM/DRM : PERIOD FOR REPLY

This is a decision on the petition filed on May 8, 2002, requesting that the Office communication mailed on April 3, 2002 be remailed and the shortened statutory period for reply set forth in the Office communication be restarted on the new mail date.

The petition is granted.

Petitioner provided a statement that the Office communication in question was received at the correspondence address of record well after the period of reply had expired due to the PTO delay in responding to the November 16, 2001 communication from applicant. The petition was filed within two weeks of receipt of the Office communication. The entire period to reply had expired.

Accordingly, the Office communication in question will be remailed and the period for reply that was originally set forth in the Office communication will be restarted to run from the new mail date of the Office communication.

Kevin Little

Kevin Little
Office of Initial Patent Examination
(703) 308-1863

UNITED STATES PATENT AND TRADEMARK OFFICE

COMMISSIONER FOR PATENTS
UNITED STATES PATENT AND TRADEMARK OFFICE
WASHINGTON, D.C. 20231
www.uspto.gov

Paper No.

In re Application of Neil T. Parkin et al :
: DECISION GRANTING PETITION
Application No. 09/874,472 : TO REMAIL AN OFFICE
Filed: June 4, 2001 : COMMUNICATION AND RESTART
Attorney Docket No. 59597/-E/JPW/AJM/DRM : PERIOD FOR REPLY

This is a decision on the petition filed on May 8, 2002, requesting that the Office communication mailed on April 3, 2002 be remailed and the shortened statutory period for reply set forth in the Office communication be restarted on the new mail date.

The petition is granted.

Petitioner provided a statement that the Office communication in question was received at the correspondence address of record well after the period of reply had expired due to the PTO delay in responding to the November 16, 2001 communication from applicant. The petition was filed within two weeks of receipt of the Office communication. The entire period to reply had expired.

Accordingly, the Office communication in question will be remailed and the period for reply that was originally set forth in the Office communication will be restarted to run from the new mail date of the Office communication.

Kevin Little

Kevin Little
Office of Initial Patent Examination
(703) 308-1863

SPE RESPONSE FOR CERTIFICATE OF CORRECTION

Paper No.: _____

DATE : 5/11/09

TO SPE OF : ART UNIT 2625

SUBJECT : Request for Certificate of Correction for Appl. No.: 09874482 Patent No.: 7042586 B2

Please respond to this request for a certificate of correction within 7 days.

FOR IFW FILES:

Please review the requested changes/corrections as shown in the **COCIN** document(s) in the IFW application image. No new matter should be introduced, nor should the scope or meaning of the claims be changed.

Please complete the response (see below) and forward the completed response to scanning using document code **COCX**.

FOR PAPER FILES:

Please review the requested changes/corrections as shown in the attached certificate of correction. Please complete this form (see below) and forward it with the file to:

Certificates of Correction Branch (CofC)
South Tower - 9A22
Palm Location 7580
You can fax the Director's SPE response to 571-270-9990

LAMONTE NEWSOME
Certificates of Correction Branch
703-308-9390 ext. 112

Thank You For Your Assistance

The request for issuing the above-identified correction(s) is hereby:
Note your decision on the appropriate box.

- ☒ **Approved** — **All** changes apply.
- ☐ **Approved in Part** — Specify below which changes **do not** apply.
- ☐ **Denied** — State the reasons for denial below.

Comments: _____

2625

UNITED STATES PATENT AND TRADEMARK OFFICE

COMMISSIONER FOR PATENTS
UNITED STATES PATENT AND TRADEMARK OFFICE
WASHINGTON, D.C. 20231
www.uspto.gov

Paper No. 7

HARNESS DICKEY & PIERCE
7700 BONHOMME
SUITE 400
ST LOUIS, MO 63105

COPY MAILED

MAR - 4 2002

OFFICE OF PETITIONS

In re Application of
Tugrul T. Kararli et al
Application No. 09/874,504
Filed: June 5, 2001
For: CYCLOOXYGENASE-2 INHIBITOR COMPOSITIONS HAVING RAPID ONSET OF THERAPEUTIC EFFECT

DECISION GRANTING STATUS UNDER 37 CFR 1.47(A)

This is in response to the "Petition Under 37 CFR 1.47(a)," filed February 5, 2002 and the communication filed by facsimile transmission on February 26, 2002.

The petition is granted.

Petitioner has shown that the non-signing inventor has refused to join in the filing of the above-identified application.

The above-identified application and papers have been reviewed and found in compliance with 37 CFR 1.47(a). This application is hereby accorded Rule 1.47(a) status. As provided in Rule 1.47(c), this Office will forward notice of this application's filing to the non-signing inventor at the address given in the petition. Notice of the filing of this application will also be published in the Official Gazette.

Telephone inquiries regarding this decision should be directed to Petitions Examiner Wan Laymon at (703) 306-5685.

This application is being forwarded to Initial Patent Examination Division.

Frances Hicks

Frances Hicks
Lead Petitions Examiner
Office of Petitions
Office of the Deputy Commissioner
for Patent Examination Policy

UNITED STATES PATENT AND TRADEMARK OFFICE

COMMISSIONER FOR PATENTS
UNITED STATES PATENT AND TRADEMARK OFFICE
WASHINGTON, D.C. 20231
www.uspto.gov

SUBHASH DESAI
1011 GREENWOOD AVENUE
WILMETTE, IL 60091

COPY MAILED

MAR - 4 2002

OFFICE OF PETITIONS

In re Application of
Kararli; Kontny; Desai; Hageman; Haskell; Hassan; and Forbes
Application No. 09/874,504
Filed: June 5, 2001
For: CYCLOOXYGENASE-2 INHIBITOR COMPOSITIONS HAVING RAPID ONSET OF THERAPEUTIC EFFECT

Dear Mr. Desai:

You are named as a joint inventor in the above identified United States patent application, filed under the provisions of 35 U.S.C. 116 (United States Code), and 37 CFR 1.47(a), Rules of Practice in Patent Cases. Should a patent be granted on the application you will be designated therein as a joint inventor.

As a named inventor you are entitled to inspect any paper in the file wrapper of the application, order copies of all or any part thereof (at a prepaid cost per 37 CFR 1.19) or make your position of record in the application. Alternatively, you may arrange to do any of the preceding through a registered patent attorney or agent presenting written authorization from you. If you care to join in the application, counsel of record (see below) would presumably assist you. Joining in the application would entail the filing of an appropriate oath or declaration by you pursuant to 37 CFR 1.63.

Telephone inquiries regarding this communication should be directed to Wan Laymon at (703) 306-5685. Requests for information regarding your application should be directed to the File Information Unit at (703) 308-2733. Information regarding how to pay for and order a copy of the application, or a specific paper in the application, should be directed to Certification Division at (703) 308-9726 or 1 (800) 972-6382 (outside the Washington D.C. area).

Frances Hicks

Frances Hicks
Lead Petitions Examiner
Office of Petitions
Office of the Deputy Commissioner
for Patent Examination Policy

cc:
HARNESS DICKEY & PIERCE
7700 BONHOMME
SUITE 400
ST LOUIS, MO 63105

UNITED STATES PATENT AND TRADEMARK OFFICE

Commissioner for Patents
United States Patent and Trademark Office
P.O. Box 1450
Alexandria, VA 22313-1450
www.uspto.gov

MORRISON & FOERSTER LLP
3811 VALLEY CENTRE DRIVE
SUITE 500
SAN DIEGO CA 92130-2332

COPY MAILED

SEP 17 2004

OFFICE OF PETITIONS

ON PETITION

In re Application of	:	
Daniel Santi et al	:	
Application No. 09/847,526	:	
Filed: May 1, 2001	:	
Attorney Docket No. 300622005400	:	

This is a decision on the petition, filed August 18, 2004, under 37 CFR 1.313(c)(2) to withdraw the above-identified application from issue after payment of the issue fee.

The petition is **GRANTED**.

The above-identified application is withdrawn from issue for consideration of a submission under 37 CFR 1.114 (request for continued examination). See 37 CFR 1.313(c)(2).

Petitioner is advised that the issue fee paid on July 2, 2004 in the above-identified application cannot be refunded. If, however, the above-identified application is again allowed, petitioner may request that it be applied towards the issue fee required by the new Notice of Allowance.[1]

Telephone inquiries should be directed to the undersigned at (703) 305-8859.

The examiner of Technology Center AU 1636 will consider the request for continued examination under 37 CFR 1.114.

Karen Creasy

Karen Creasy
Petitions Examiner
Office of Petitions
Office of the Deputy Commissioner
for Patent Examination Policy

---

[1] The request to apply the issue fee to the new Notice may be satisfied by completing and returning the new Issue Fee Transmittal Form PTOL-85(b), which includes the following language thereon: "Commissioner for Patents is requested to apply the Issue Fee and Publication Fee (if any) or re-apply any previously paid issue fee to the application identified above." Petitioner is advised that, whether a fee is indicated as being due or not, the Issue Fee Transmittal Form **must** be completed and timely submitted to avoid abandonment. Note the language in bold text on the first page of the Notice of Allowance and Fee(s) Due (PTOL-85).

#8
DW

UNITED STATES PATENT AND TRADEMARK OFFICE

COMMISSIONER FOR PATENTS
UNITED STATES PATENT AND TRADEMARK OFFICE
P.O. BOX 1450
ALEXANDRIA, VA 22313-1450
www.uspto.gov

JUN - 7 2004

MAILED
JUN - 7 2004
OFFICE OF THE DIRECTOR
TC 3600

JACKSON WALKER, L.L.P.
SUITE 2100
112 EAST PECAN ST.
SAN ANTONIO TX 78205

In re Application of
Chun Lung Kwok
Application No. 09/874,541
Filed: June 4, 2001
For: KICK BOARDS

DECISION ON PETITION TO WITHDRAW THE HOLDING OF ABANDONMENT

This is in response to applicant's petition to withdraw the holding of abandonment, filed in the United States Patent and Trademark Office on March 2, 2004.

The petition is **GRANTED**.

A review of the file record indicates that this application was held abandoned for failure to timely respond to the non-final Office action mailed on September 13, 2002.

The applicant submits that the Office action was never received.

A review of the file reveals that a Change of Correspondence Address was filed June 17, 2002 and that the Office action and Notice of Abandonment were mailed to the new address. However, petitioner states that no such address change was filed by the attorney of record and that the discrepancy was not discovered until the attorney contacted the examiner to inquire about the status of the application.

The application is being forwarded to the Supervisory Legal Instruments Examiner with instructions to withdraw the holding of abandonment and restore the application to pending status before re-dating and re-mailing the Office action of September 13, 2002 to the correct correspondence address noted above.

Randolph A. Reese

Randolph A. Reese
Special Programs Examiner
Technology Center 3600
(703) 308-2121

RAR/mjz: 5/18/04

UNITED STATES PATENT AND TRADEMARK OFFICE

COMMISSIONER FOR PATENTS
UNITED STATES PATENT AND TRADEMARK OFFICE
WASHINGTON, D.C. 20231
www.uspto.gov

Paper No. 7

W. Scott Petty
KING & SPALDING
191 Peachtree Street
45th Floor
Atlanta, GA 30303-1763

MAILED

SEP 25 2002

Technology Center 2100

In re Application of: Robert David Graham	)	
Application No. 09/874,574	)	
Filed: June 4, 2001	)	**DECISION ON REQUEST FOR**
For: SYSTEM AND METHOD FOR	)	**WITHDRAWAL AS ATTORNEY**
PREVENTING NETWORK MISUSE	)	

This is a decision on the Request To Withdraw from Representation filed September 4, 2002.

A grantable request to withdraw as attorney of record should indicate thereon the present mailing addresses of the attorney(s) who is/are withdrawing from the record and of the applicant. The request for withdrawal must be signed by every attorney seeking to withdraw or contain a clear indication that one attorney is signing on behalf of another/others. A request to withdraw will not be approved unless at least 30 (thirty) days would remain between the date of approval and the later of the expiration date of a time to file a response or the expiration date of the maximum time period which can be extended under 37 C.F.R. § 1. 136(a). The effective date of withdrawal being the date of decision and not the date of request. See M.P.E.P. § 402.06. 37 C.F.R. § 1.36 further requires that the applicant or patent owner be notified of the withdrawal of the attorney or agent.

The request is **GRANTED**.

All future communications from the Office will be directed to the below-listed address until otherwise notified by applicant. This correspondence address is provided by the withdrawn attorney(s). Applicant is reminded of the obligation to promptly notify the Patent and Trademark Office (Office) of any change in correspondence address to ensure receipt of all communications from the Office.

Vincent N. Trans
for Special Programs Examiner
Technology Center 2100
Computer Architecture and Software
(703) 305-9750

UNITED STATES PATENT AND TRADEMARK OFFICE

COMMISSIONER FOR PATENTS
UNITED STATES PATENT AND TRADEMARK OFFICE
P.O. BOX 1450
ALEXANDRIA, VA 22313-1450
www.uspto.gov

MCKENNA LONG & ALDRIDGE, LLP
1900 K STREET, NW
WASHINGTON, DC 20006

COPY MAILED

FEB 22 2008

OFFICE OF PETITIONS

In re Patent No. 6,523,680	:	
Issue Date: February 25, 2003	:	
Application No. 09/874,589	:	ON PETITION
Filed: June 5, 2001	:	
Patentee(s): Dieter Guldenfels	:	

This is a decision on the petition under 37 CFR 1.378(c), filed on May 9, to accept the delayed payment of a maintenance fee for the above-identified patent.

Since petitioner has demonstrated to the satisfaction of the Commissioner that the delay in timely paying the maintenance fee was unintentional, the petition under 37 CFR 1.378(c) is hereby **GRANTED**.

The maintenance fee is hereby accepted and the above-identified patent is reinstated as of the mail date of this decision.

This patented file is being forwarded to Files Repository.

Telephone inquiries should be directed to the undersigned at (571) 272-3226.

Andrea Smith
Petitions Examiner
Office of Petitions

OIPE IAP97
MAY 09 2007
PATENT & TRADEMARK OFFICE

DAC Mos
JFW

PTO/SB/66 (10-05)
Approved for use through 04/30/2009. OMB 0651-0016
U.S. Patent and Trademark Office; U.S. DEPARTMENT OF COMMERCE
Under the Paperwork Reduction Act of 1995, no persons are required to respond to a collection of information unless it displays a valid OMB control number.

PETITION TO ACCEPT UNINTENTIONALLY DELAYED PAYMENT OF MAINTENANCE FEE IN AN EXPIRED PATENT (37 CFR 1.378(c))

Docket Number (Optional): 4319.016.20

Mail to: Mail Stop Petition
Commissioner for Patents
P.O. Box 1450
Alexandria, VA 22313-1450
Fax: (571) 273-8300

NOTE: If information or assistance is needed in completing this form, please contact Petitions Information at (571) 272-3282.

Patent No. 6,523,680 Application Number 09/874,589

Issue Date February 25, 2003 Filing Date June 5, 2001

CAUTION: Maintenance fee (and surcharge, if any) payment must correctly identify: (1) the patent number (or reissue patent number, if a reissue) and (2) the application number of the actual U.S. application (or reissue application) leading to issuance of that patent to ensure the fee(s) is/are associated with the correct patent. 37 CFR 1.366(c) and (d).

Also complete the following information, if applicable

The above - identified patent:

☐ is a reissue of original Patent No. _____, original issue date _____; original application number _____, original filing date _____.

☐ resulted from the entry into the U.S. under 35 U.S.C. 371 of international application _____ filed on _____.

CERTIFICATE OF MAILING (37 CFR 1.8(a))

I hereby certify that this paper (along with any paper referred to as being attached or enclosed) is being deposited with the United States Postal Service on the date shown below with sufficient postage as first class mail in an envelope addressed to Mail Stop Petition, Commissioner for Patents, P.O. Box 1450, Alexandria, VA 22313-1450, or facsimile transmitted to the U.S. Patent and Trademark Office on the date shown below.

Adjustment date: 02/22/2008 CKHLOK
05/23/2007 DLINDSEY 00000003 6523680
01 FC:1599 -2540.00 OP

Date Signature

02/22/2008 CKHLOK 00000013 6523680
01 FC:1551 900.00 OP
02 FC:1558 1640.00 OP

Typed or printed name of person signing Certificate

05/10/2007 YPULITEI 00000012 6523680
01 FC:1599 2540.00 OP

This collection of information is required by 37 CFR 1.378(c). The information is required to obtain or retain a benefit by the public which is to file (and by the USPTO to process) an application. Confidentiality is governed by 35 U.S.C. 122 and 37 CFR 1.11 and 1.14. This collection is estimated to take 1 hour to complete, including gathering, preparing, and submitting the completed application form to the USPTO. Time will vary depending upon the individual case. Any comments on the amount of time you require to complete this form and/or suggestions for reducing this burden, should be sent to the Chief Information Officer, U.S. Patent and Trademark Office, U.S. Department of Commerce, P.O. Box 1450, Alexandria, VA 22313-1450. DO NOT SEND FEES OR COMPLETED FORMS TO THIS ADDRESS. **SEND TO: Mail Stop Petition, Commissioner for Patents, P.O. Box 1450, Alexandria, VA 22313-1450.**

If you need assistance in completing the form, call 1-800-PTO-9199 and select option 2.

Under the Paperwork Reduction Act of 1995, no persons are required to respond to a collection of information unless it displays a valid OMB control number.

1. SMALL ENTITY

☐ Patentee claims, or has previously claimed, small entity status. See 37 CFR 1.27.

2. LOSS OF ENTITLEMENT TO SMALL ENTITY STATUS

☐ Patentee is no longer entitled to small entity status. See 37 CFR 1.27(g).

3. MAINTENANCE FEE (37 CFR 1.20(e)-(g))

The appropriate maintenance fee must be submitted with this petition, unless it was paid earlier.

NOT Small Entity			Small Entity		
Amount	Fee	(Code)	Amount	Fee	(Code)
☑ $ 900.00	3 1/2 yr fee	(1551)	☐ $ _____	3 1/2 yr fee	(2551)
☐ $ _____	7 1/2 yr fee	(1552)	☐ $ _____	7 1/2 yr fee	(2552)
☐ $ _____	11 1/2 yr fee	(1553)	☐ $ _____	11 1/2 yr fee	(2553)

MAINTENANCE FEE BEING SUBMITTED $ 900.00

4. SURCHARGE

The surcharge required by 37 CFR 1.20(i)(2) of $ 1,640.00 (Fee Code 1558) must be paid as a condition of accepting unintentionally delayed payment of the maintenance fee.

SURCHARGE BEING SUBMITTED $ 1,640.00

5. MANNER OF PAYMENT

☑ Enclosed is a check for the sum of $ 2,540.00.

☐ Please charge Deposit Account No._____ the sum of $_____. A duplicate copy of this authorization is attached.

☐ Payment by credit card. Form PTO-2038 is attached.

6. AUTHORIZATION TO CHARGE ANY FEE DEFICIENCY

☑ The Director is hereby authorized to charge any maintenance fee, surcharge or petition deficiency to Deposit Account No. 50-0911. A duplicate copy of this authorization is attached.

Under the Paperwork Reduction Act of 1995, no persons are required to respond to a collection of information unless it displays a valid OMB control number

7. OVERPAYMENT

As to any overpayment made please

☑ Credit to Deposit Account No. 50-0911.

OR

☐ Send refund check.

WARNING:

Petitioner/applicant is cautioned to avoid submitting personal information in documents filed in a patent application that may contribute to identity theft. Personal information such as social security numbers, bank account numbers, or credit card numbers (other than a check or credit card authorization form PTO-2038 submitted for payment purposes) is never required by the USPTO to support a petition or an application. If this type of personal information is included in documents submitted to the USPTO, petitioners/applicants should consider redacting such personal information from the documents before submitting them to the USPTO. Petitioner/applicant is advised that the record of a patent application is available to the public after publication of the application (unless a non-publication request in compliance with 37 CFR 1.213(a) is made in the application) or issuance of a patent. Furthermore, the record from an abandoned application may also be available to the public if the application is referenced in a published application or an issued patent (see 37 CFR 1.14). Checks and credit card authorization forms PTO-2038 submitted for payment purposes are not retained in the application file and therefore are not publicly available.

8. STATEMENT

The delay in payment of the maintenance fee to this patent was unintentional.

9. PETITIONER(S) REQUEST THAT THE DELAYED PAYMENT OF THE MAINTENANCE FEE BE ACCEPTED AND THE PATENT REINSTATED.

Signature(s) of Petitioner(s) — Date: May 9, 2007

Matthew T. Bailey
Typed or printed name(s)

33,829
Registration Number, if applicable

(202) 496-7500
Telephone Number

1900 K St., NW
Address

Washington, DC 20006
Address

37 CFR 1.378(d) states: "Any petition under this section must be signed by an attorney or agent registered to practice before the Patent and Trademark Office, or by the patentee, the assignee, or other party in interest."

ENCLOSURES:

☑ Maintenance Fee payment

☑ Surcharge under 37 CFR 1.20(i)(2) (fee for filing the maintenance fee petition)

☑ Copy of Patent Expiration

UNITED STATES PATENT AND TRADEMARK OFFICE

COMMISSIONER FOR PATENTS
UNITED STATES PATENT AND TRADEMARK OFFICE
P.O. BOX 1450
ALEXANDRIA, VA 22313-1450
www.uspto.gov

ALLEN C. TURNER
TRASK BRITT, P.C.
P.O. BOX 2550
SALT LAKE CITY, UTAH 84110-2550

COPY MAILED

FEB 19 2004

OFFICE OF PETITIONS

In re Application of
Johanna Jacoba Maria et al
Application No. 09/874,626
Filed: June 5, 2001
Attorney Docket No. 4041.1US

NOTICE

This is a notice regarding your request for acceptance of a fee deficiency submission under 37 CFR 1.28. On September 1, 1998, the Court of Appeals for the Federal Circuit held that 37 CFR 1.28(c) is the sole provision governing the time for correction of the erroneous payment of the issue fee as a small entity. **See DH Technology v. Synergystex International, Inc. 154 F.3d 1333, 47 USPQ2d 1865 (Fed. Cir. Sept. 1, 1998).**

The Office no longer investigates or rejects original or reissue applications under 37 CFR 1.56. **1098 Off. Gaz. Pat. Office 502 (January 3, 1989).** Therefore, nothing in this Notice is intended to imply that an investigation was done.

Your fee deficiency submission under 37 CFR 1.28 is hereby **ACCEPTED**.

Inquiries related to this communication should be directed to the Office of Petitions Staff at (703) 305-9285.

This file is being forwarded to the Technology Center AU 1648.

Irvin Dingle
Petitions Examiner
Office of Petitions
Office of the Deputy Commissioner
for Patent Examination Policy

Mailing Month

Decision Count Sheet

Office of Petitions Internal Document

Application No. 09/874626

☑ GRANTED	**Deciding Official** Irvin Dingle
☐ DISMISSED	
☐ DENIED	Time Period for Reply: ___ None ___ Two (2) Months ___ Other _____

Notes:

12/31/2003

OIPE JC160
APR 19 2004
PATENT & TRADEMARK OFFICE

UNITED STATES PATENT AND TRADEMARK OFFICE

COMMISSIONER FOR PATENTS
UNITED STATES PATENT AND TRADEMARK OFFICE
P.O. BOX 1450
ALEXANDRIA, VA 22313-1450
WWW.USPTO.GOV

RECEIVED
JUL 16 2003
Trask Britt

Paper No.

COPY MAILED

JUL 11 2003

OFFICE OF PETITIONS

TRASK BRITT
P.O. BOX 2550
SALT LAKE CITY UT 84110

In re Application of
Ow Chee Moon et al
Application No. 09/874,631
Filed: June 5, 2001
Attorney Docket No. 4368US(99-0959)

ON PETITION

This is a decision on the petition, filed July 11, 2003, under 37 CFR 1.313(c)(2) to withdraw the above-identified application from issue after payment of the issue fee.

The petition is **GRANTED.**

The above-identified application is withdrawn from issue for consideration of a submission under 37 CFR 1.114 (request for continued examination). See 37 CFR 1.313(c)(2).

Petitioner is advised that the issue fee paid on December 26, 2002 in the above-identified application cannot be refunded. If, however, the above-identified application is again allowed, petitioner may request that it be applied towards the issue fee required by the new Notice of Allowance.[1]

Telephone inquiries should be directed to the undersigned at (703) 305-8859.

After receipt of the file in the Office of Petitions, the application will be forwarded to Technology Center AU 2815 for processing of the request for continued examination under 37 CFR 1.114.

Karen Creasy

Karen Creasy
Petitions Examiner
Office of Petitions
Office of the Deputy Commissioner
for Patent Examination Policy

---

[1] The request to apply the issue fee to the new Notice may be satisfied by completing and returning the new Issue Fee Transmittal Form PTOL-85(b), which includes the following language thereon: "Commissioner for Patents is requested to apply the Issue Fee and Publication Fee (if any) or re-apply any previously paid issue fee to the application identified above." Petitioner is advised that, whether a fee is indicated as being due or not, the Issue Fee Transmittal Form **must** be completed and timely submitted to avoid abandonment. Note the language in bold text on the first page of the Notice of Allowance and Fee(s) Due (PTOL-85).

UNITED STATES PATENT AND TRADEMARK OFFICE

Commissioner for Patents
United States Patent and Trademark Office
P.O. Box 1450
Alexandria, VA 22313-1450
www.uspto.gov

Paper No. ____

TRASK BRITT
P O BOX 2550
SALT LAKE CITY, UT 84110

COPY MAILED

SEP 2 9 2004

OFFICE OF PETITIONS

In re Application of	:	
Ow Chee Moon et al	:	
Application No. 09/874,631	:	DECISION GRANTING PETITION
Filed: June 5, 2001	:	UNDER 37 CFR 1.313(c)(2)
Attorney Docket No. 4368US (99-0959)	:	

This is a decision on the petition, filed September 24, 2004, under 37 CFR 1.313(c)(2) to withdraw the above-identified application from issue after payment of the issue fee.

The petition is **GRANTED**.

The above-identified application is withdrawn from issue for consideration of a submission under 37 CFR 1.114 (request for continued examination). See 37 CFR 1.313(c)(2).

Petitioner is advised that the issue fee paid in the above-identified application cannot be refunded. If, however, the above-identified application is again allowed, petitioner may request that it be applied towards the issue fee required by the new Notice of Allowance.[1]

Telephone inquiries should be directed to the undersigned at (703) 305-8680.

This matter is being referred to Technology Center AU 2815 for processing of the request for continued examination under 37 CFR 1.114 and for consideration of the concurrently filed Information Disclosure Statement.

Frances Hicks
Petitions Examiner
Office of Petitions
Office of the Deputy Commissioner
for Patent Examination Policy

---

[1] *The request to apply the issue fee to the new Notice may be satisfied by completing and returning the new Issue Fee Transmittal Form PTOL-85(b), which includes the following language thereon: "Commissioner for Patents is requested to apply the Issue Fee and Publication Fee (if any) or re-apply any previously paid issue fee to the application identified above." Petitioner is advised that, whether a fee is indicated as being due or not, the Issue Fee Transmittal Form* ***must*** *be completed and timely submitted to avoid abandonment. Note the language in bold text on the first page of the Notice of Allowance and Fee(s) Due (PTOL-85).*

UNITED STATES PATENT AND TRADEMARK OFFICE

COMMISSIONER FOR PATENTS
UNITED STATES PATENT AND TRADEMARK OFFICE
P.O. BOX 1450
ALEXANDRIA, VA 22313-1450
WWW.USPTO.GOV

Paper No. 19

TRASK BRITT
P.O. BOX 2550
SALT LAKE CITY UT 84110

COPY MAILED

JUL 1 1 2003

OFFICE OF PETITIONS

In re Application of
Ow Chee Moon et al
Application No. 09/874,631
Filed: June 5, 2001
Attorney Docket No. 4368US(99-0959)

ON PETITION

This is a decision on the petition, filed July 11, 2003, under 37 CFR 1.313(c)(2) to withdraw the above-identified application from issue after payment of the issue fee.

The petition is **GRANTED.**

The above-identified application is withdrawn from issue for consideration of a submission under 37 CFR 1.114 (request for continued examination). See 37 CFR 1.313(c)(2).

Petitioner is advised that the issue fee paid on December 26, 2002 in the above-identified application cannot be refunded. If, however, the above-identified application is again allowed, petitioner may request that it be applied towards the issue fee required by the new Notice of Allowance.[1]

Telephone inquiries should be directed to the undersigned at (703) 305-8859.

After receipt of the file in the Office of Petitions, the application will be forwarded to Technology Center AU 2815 for processing of the request for continued examination under 37 CFR 1.114.

Karen Creasy

Karen Creasy
Petitions Examiner
Office of Petitions
Office of the Deputy Commissioner
for Patent Examination Policy

---

[1] The request to apply the issue fee to the new Notice may be satisfied by completing and returning the new Issue Fee Transmittal Form PTOL-85(b), which includes the following language thereon: "Commissioner for Patents is requested to apply the Issue Fee and Publication Fee (if any) or re-apply any previously paid issue fee to the application identified above." Petitioner is advised that, whether a fee is indicated as being due or not, the Issue Fee Transmittal Form **must** be completed and timely submitted to avoid abandonment. Note the language in bold text on the first page of the Notice of Allowance and Fee(s) Due (PTOL-85).

UNITED STATES PATENT AND TRADEMARK OFFICE

Commissioner for Patents
United States Patent and Trademark Office
P.O. Box 1450
Alexandria, VA 22313-1450
www.uspto.gov

Paper No. 33

TRASK BRITT
P O BOX 2550
SALT LAKE CITY, UT 84110

COPY MAILED

SEP 2 9 2004

OFFICE OF PETITIONS

In re Application of	:	
Ow Chee Moon et al	:	
Application No. 09/874,631	:	DECISION GRANTING PETITION
Filed: June 5, 2001	:	UNDER 37 CFR 1.313(c)(2)
Attorney Docket No. 4368US (99-0959)	:	

This is a decision on the petition, filed September 24, 2004, under 37 CFR 1.313(c)(2) to withdraw the above-identified application from issue after payment of the issue fee.

The petition is **GRANTED**.

The above-identified application is withdrawn from issue for consideration of a submission under 37 CFR 1.114 (request for continued examination). See 37 CFR 1.313(c)(2).

Petitioner is advised that the issue fee paid in the above-identified application cannot be refunded. If, however, the above-identified application is again allowed, petitioner may request that it be applied towards the issue fee required by the new Notice of Allowance.[1]

Telephone inquiries should be directed to the undersigned at (703) 305-8680.

This matter is being referred to Technology Center AU 2815 for processing of the request for continued examination under 37 CFR 1.114 and for consideration of the concurrently filed Information Disclosure Statement.

Frances Hicks
Frances Hicks
Petitions Examiner
Office of Petitions
Office of the Deputy Commissioner
for Patent Examination Policy

---

[1] *The request to apply the issue fee to the new Notice may be satisfied by completing and returning the new Issue Fee Transmittal Form PTOL-85(b), which includes the following language thereon: "Commissioner for Patents is requested to apply the Issue Fee and Publication Fee (if any) or re-apply any previously paid issue fee to the application identified above." Petitioner is advised that, whether a fee is indicated as being due or not, the Issue Fee Transmittal Form must be completed and timely submitted to avoid abandonment. Note the language in bold text on the first page of the Notice of Allowance and Fee(s) Due (PTOL-85).*

Under the Paperwork Reduction Act of 1995, no persons are required to respond to a collection of information unless it displays valid OMB control number.

PETITION TO ACCEPT UNINTENTIONALLY DELAYED PAYMENT OF MAINTENANCE FEE IN AN EXPIRED PATENT (37 CFR 1.378(c))

Patent Number	Issue Date (YYYY-MM-DD)	Application Number	Filing Date (YYYY-MM-DD)	Docket Number (if applicable)
6907875	2005-06-21	09874642	2001-06-05	EOD-114-A

CAUTION: Maintenance fee (and surcharge, if any) payment must correctly identify: (1) the patent number and (2) the application number of the actual U.S. application leading to issuance of that patent to ensure the fee(s) is/are associated with the correct patent. 37 CFR 1.366(c) and (d).

SMALL ENTITY
☒ Patentee claims, or has previously claimed, small entity status. See 37 CFR 1.27.

LOSS OF ENTITLEMENT TO SMALL ENTITY STATUS
☐ Patentee is no longer entitled to small entity status. See 37 CFR 1.27(g)

NOT Small Entity		Small Entity	
Fee	Code	Fee	Code
○ 3 ½ year	(1551)	◉ 3 ½ year	(2551)
○ 7 ½ year	(1552)	○ 7 ½ year	(2552)
○ 11 ½ year	(1553)	○ 11 ½ year	(2553)

SURCHARGE
The surcharge required by 37 CFR 1.20(i)(2) (Fee Code 1558) must be paid as a condition of accepting unintentionally delayed payment of the maintenance fee.

MAINTENANCE FEE (37 CFR 1.20(e)-(g))
The appropriate maintenance fee must be submitted with this petition.

STATEMENT
THE UNDERSIGNED CERTIFIES THAT THE DELAY IN PAYMENT OF THE MAINTENANCE FEE TO THIS PATENT WAS UNINTENTIONAL

PETITIONER(S) REQUEST THAT THE DELAYED PAYMENT OF THE MAINTENANCE FEE BE ACCEPTED AND THE PATENT REINSTATED

THIS PORTION MUST BE COMPLETED BY THE SIGNATORY OR SIGNATORIES

37 CFR 1.378(d) states: "Any petition under this section must be signed by an attorney or agent registered to practice before the Patent and Trademark Office, or by the patentee, the assignee, or other party in interest."

I certify, in accordance with 37 CFR 1.4(d)(4) that I am

◉ An attorney or agent registered to practice before the Patent and Trademark Office

○ A sole patentee

○ A joint patentee; I certify that I am authorized to sign this submission on behalf of all the other patentees.

○ A joint patentee; all of whom are signing this e-petition

○ The assignee of record of the entire interest

Patent Practitioner			
A signature of the applicant or representative is required in accordance with 37 CFR 1.33 and 10.18. Please see 37 CFR 1.4(d) for the form of the signature			
Signature	/William Blackman/	Date (YYYY-MM-DD)	2009-04-03
Name	William Blackman	Registration Number	32397

This collection of information is required by 37 CFR 1.378(c). The information is required to obtain or retain a benefit by the public which is to file (and by the USPTO to process) an application. Confidentiality is governed by 35 U.S.C. 122 and 37 CFR 1.11 and 1.14. This collection is estimated to take 1 hour to complete, including gathering, preparing, and submitting the completed application form to the USPTO. Time will vary depending upon the individual case. Any comments on the amount of time you require to complete this form and/ or suggestions for reducing this burden, should be sent to the Chief Information Officer, U.S. Patent and Trademark Office, U.S. Department of Commerce, P.O. Box 1450, Alexandria, VA 22313-1450. DO NOT SEND FEES OR COMPLETED FORMS TO THIS ADDRESS. **This form can only be used when in conjunction with EFS-Web. If this form is mailed to the USPTO, it may cause delays in reinstating the patent.**

Privacy Act Statement

The Privacy Act of 1974 (P.L. 93-579) requires that you be given certain information in connection with your submission of the attached form related to a patent application or patent. Accordingly, pursuant to the requirements of the Act, please be advised that: (1) the general authority for the collection of this information is 35 U.S.C. 2(b)(2); (2) furnishing of the information solicited is voluntary; and (3) the principal purpose for which the information is used by the U.S. Patent and Trademark Office is to process and/or examine your submission related to a patent application or patent. If you do not furnish the requested information, the U.S. Patent and Trademark Office may not be able to process and/or examine your submission, which may result in termination of proceedings or abandonment of the application or expiration of the patent.

The information provided by you in this form will be subject to the following routine uses:

1. The information on this form will be treated confidentially to the extent allowed under the Freedom of Information Act (5 U.S.C. 552) and the Privacy Act (5 U.S.C. 552a). Records from this system of records may be disclosed to the Department of Justice to determine whether the Freedom of Information Act requires disclosure of these record s.

2. A record from this system of records may be disclosed, as a routine use, in the course of presenting evidence to a court, magistrate, or administrative tribunal, including disclosures to opposing counsel in the course of settlement negotiations.

3. A record in this system of records may be disclosed, as a routine use, to a Member of Congress submitting a request involving an individual, to whom the record pertains, when the individual has requested assistance from the Member with respect to the subject matter of the record.

4. A record in this system of records may be disclosed, as a routine use, to a contractor of the Agency having need for the information in order to perform a contract. Recipients of information shall be required to comply with the requirements of the Privacy Act of 1974, as amended, pursuant to 5 U.S.C. 552a(m).

5. A record related to an International Application filed under the Patent Cooperation Treaty in this system of records may be disclosed, as a routine use, to the International Bureau of the World Intellectual Property Organization, pursuant to the Patent Cooperation Treaty.

6. A record in this system of records may be disclosed, as a routine use, to another federal agency for purposes of National Security review (35 U.S.C. 181) and for review pursuant to the Atomic Energy Act (42 U.S.C. 218(c)).

7. A record from this system of records may be disclosed, as a routine use, to the Administrator, General Services, or his/her designee, during an inspection of records conducted by GSA as part of that agency's responsibility to recommend improvements in records management practices and programs, under authority of 44 U.S.C. 2904 and 2906. Such disclosure shall be made in accordance with the GSA regulations governing inspection of records for this purpose, and any other relevant (i.e., GSA or Commerce) directive. Such disclosure shall not be used to make determinations about individuals.

8. A record from this system of records may be disclosed, as a routine use, to the public after either publication of the application pursuant to 35 U.S.C. 122(b) or issuance of a patent pursuant to 35 U.S.C. 151. Further, a record may be disclosed, subject to the limitations of 37 CFR 1.14, as a routine use, to the public if the record was filed in an application which became abandoned or in which the proceedings were terminated and which application is referenced by either a published application, an application open to public inspections or an issued patent.

9. A record from this system of records may be disclosed, as a routine use, to a Federal, State, or local law enforcement agency, if the USPTO becomes aware of a violation or potential violation of law or regulation.

UNITED STATES PATENT AND TRADEMARK OFFICE

Commissioner for Patents
United States Patent and Trademark Office
P.O. Box 1450
Alexandria, VA 22313-1450
www.uspto.gov

In re Patent No. 6907875
Issue Date: June 21,2005
Application No. 09874642
Filed: June 5,2001
Attorney Docket No. EOD-114-A

:DECISION GRANTING PETITION
:UNDER 37 CFR 1.378(c)

This is a decision on the electronic petition, filed April 3,2009 ,under 37 CFR 1.378(c) to accept the unintentionally delayed payment of the 3.5 year maintenance fee for the above-identified patent.

The petition is **GRANTED**.

The maintenance fee is accepted, and the above-identified patent reinstated as of April 3,2009 . This decision also constitutes notice that the fee has been accepted. An electronic copy of the petition and this decision has been created as an entry in the Image File Wrapper. Nevertheless, petitioner should print and retain an independent copy.

Telephone inquiries related to this electronic decision should be directed to the Electronic Business Center at 1-866-217-9197.

UNITED STATES PATENT AND TRADEMARK OFFICE

Commissioner for Patents
United States Patent and Trademark Office
P.O. Box 1450
Alexandria, VA 22313-1450
www.uspto.gov

CARRIER BLACKMAN AND ASSOCIATES
24101 NOVI ROAD
SUITE 100
NOVI MI 48375

MAILED

JUN 30 2009

OFFICE OF PETITIONS

In re Patent No. 6,907,875	:	
Issue Date: June 21, 2005	:	
Application No. 09/874,642	:	DECISION ON REQUEST FOR REFUND
Filed: June 5, 2001	:	
Attorney Docket No. EOD-114-A	:	

This is a decision on the Request For Refund filed May 11, 2009.

The request is **GRANTED**.

Applicant states that "The above-mentioned application issued as a patent on 21 June 2005. The maintenance fee was due 21 December 2008. We sent in a Petition to Accept Unintentionally Delayed Payment of Maintenance Fee in an Expired Patent (37 CFR 1.378(c) on 03 April 2009 erroneously requesting $1640.00 (1558) be charged to revive the patent instead of the $65.00 (2553 1.20(h)) surcharge-Late payment with 6 months. $1640.00 minus $65.00 = $1575".

Applicant requested that the $1,575.00 be refunded to the deposit account. However, since the above fees were paid by Credit Card, the $1,575.00 will be credited to applicant's credit card account and the amount of $65.00 (late payment within 6 months under fee code 2556) will be applied.

It is noted that the petition submitted by EFS on April 3, 2009 was automatically processed and granted by EFS on April 3, 2009.

Any questions concerning this matter may be directed to the undersigned at (571) 272-3208.

/Karen Creasy/
Karen Creasy
Petitions Examiner
Office of Petitions

UNITED STATES PATENT AND TRADEMARK OFFICE

Under Secretary of Commerce for Intellectual Property and
Director of the United States Patent and Trademark Office
Washington, D.C. 20231
www.uspto.gov

Paper No. 4

BLAKELY SOKOLOFF TAYLOR & ZAFMAN LLP
12400 WILSHIRE BOULEVARD, SEVENTH FLOOR
LOS ANGELES, CA 90035

COPY MAILED

OCT 1 8 2001

OFFICE OF PETITIONS

In re Application of :
Suresh Ramalingam et al :
Application No. 09/874,666 :
Filed: June 5, 2001 :
Attorney Docket No. 42390P7045D :

ON PETITION

This is a decision on the "Petition to Request Waiver of Declaration Surcharge," filed August 13, 2001, which is being treated as a petition under 37 CFR 1.181 (no fee) to vacate the Notice to File Missing Parts of Nonprovisional Application (hereafter Notice) mailed June 26, 2001.

The petition is **granted**.

The Notice of June 26, 2001 required the submission of an executed oath or declaration and a surcharge of $130 for its late filing.

Petitioner states that a declaration was filed with the application on June 5, 2001. To support this assertion, petitioner has submitted a copy of a stamped return postcard which acknowledges receipt by the Patent and Trademark Office (PTO) on June 5, 2001 of, *inter alia*, a declaration and power of attorney having three pages.

The declaration acknowledged as having been received in the PTO on June 5, 2001 is not of record in the application file and cannot be located. However, MPEP 503 states that "A post card receipt which itemizes and properly identifies the papers which are being filed serves as *prima facie* evidence of receipt in the PTO of all the items listed thereon on the date stamped thereon by the PTO." Accordingly, it is concluded that the declaration and power of attorney was received in the PTO on June 5, 2001, but lost after receipt thereof. In view of thereof, the Notice of June 26, 2001 is vacated. Consequently, no surcharge fee is required.

It appears that a $80 independent claim fee was charged to petitioner's deposit account on August 15, 2001, which appears to be in error since this fee was previously paid on June 11, 2001. Accordingly, the duplicate $80 claim fee will be credited to petitioner's deposit account in due course.

Any questions concerning this decision on petition may be directed to the undersigned at (703) 305-8680.

This application is being returned to the Office of Initial Patent Examination Division for preexamination processing.

Frances Hicks

Frances Hicks
Petitions Examiner
Office of Petitions
Office of the Deputy Commissioner
for Patent Examination Policy

UNITED STATES PATENT & TRADEMARK OFFICE
Washington, D.C. 20231

REQUEST FOR **PATENT** FEE REFUND

1 Date of Request: 10-16-01 | 2 Serial/Patent # 09/874666

3 Please refund the following fee(s):		4 PAPER NUMBER	5 DATE FILED	6 AMOUNT
✓	Filing	3	8/13/01	$ 80
	Amendment			$
	Extension of Time			$
	Notice of Appeal/Appeal			$
	Petition			$
	Issue			$
	Cert of Correction/Terminal Disc.			$
	Maintenance			$
	Assignment			$
	Other			$

7 TOTAL AMOUNT OF REFUND $ 80

8 TO BE REFUNDED BY:

- [ ] Treasury Check
- [x] Credit Deposit A/C #:

9 02--2606

10 REASON:

- [x] Overpayment
- [x] Duplicate Payment
- [ ] No Fee Due (Explanation):

11 REFUND REQUESTED BY:

TYPED/PRINTED NAME: F. Hicks TITLE: Pats Ex'N

SIGNATURE: F. Hicks PHONE: 305-8680

OFFICE: 4700

****

THIS SPACE RESERVED FOR FINANCE USE ONLY:

APPROVED: Alicia Kelly DATE: 10-18-01

Instructions for completion of this form appear on the back. After completion, attach white and yellow copies to the official file and mail or hand-carry to:

Office of Finance
Refund Branch
Crystal Park One, Room 802B

FORM PTO 1577
(01/90)

INSTRUCTIONS FOR USING REQUEST FOR PATENT FEE REFUND FORMS [FORM NUMBER PTO-1577]

Fill out the form completely, and print or type all information.

1. **DATE OF REQUEST:** Enter the date you fill out the form.

2. **SERIAL/PATENT #:** Enter the Serial or Patent Number.

3. Enter a check mark or an X in the box preceding the type of fee to be refunded. If the fee you are refunding is not listed, place a check mark or an X in the box preceding **"Other** _____ _____" and print or type the fee type on the following blank line.

4. **PAPER NUMBER:** Enter the **PAPER NUMBER** of the document for which a refund is requested. [**PAPER NUMBER** refers to the sequential number (on the outside of the official file wrapper) assigned to the document. If the document has no number assigned to it, you may leave this box blank.]

5. **DATE FILED:** Enter the Mailroom Date of the document for which a refund is requested.

6. **AMOUNT:** Enter the dollar amount of the refund.

7. **TOTAL AMOUNT OF REFUND:** Add the dollar amounts in the column labeled **AMOUNT** and enter the total in the box.

8. **TO BE REFUNDED BY:** Enter a check mark or an X in the box preceding **TREASURY CHECK** OR **CREDIT DEPOSIT A/C #** to indicate how the refund is to be made. Requests to credit a Deposit Account must be accompanied by formal authorization to credit the account. Formal authorization to credit a deposit account consists of a copy of the signed statement by the owner of the Deposit Account granting the Commissioner permission to credit their account, **stamped with the FEE ACCOUNTABILITY STAMP with the amount of the refund circled.**

9. **DEPOSIT ACCOUNT NUMBER:** If refund is by credit to a Deposit Account, enter the Deposit Account Number.

10. **REASON:** Enter a check mark or an X in the box preceding the reason the refund is being requested. If there is no fee due, enter the reason on the 3 blank lines provided.

11. **REFUND REQUESTED BY:** Only PTO personnel formally authorized to request refunds should enter their **NAME**, **TITLE**, **PHONE NUMBER**, **OFFICE** and **SIGNATURE** on these blanks. Supervisors shall provide the Office of Finance with an advance list of personnel authorized to sign this form.

COPIES:	**WHITE:**	*Attach to the official file.*
	YELLOW:	*Attach to the official file.*
	PINK:	*Retain for originating office.*

Mail or hand-carry the completed form with attachment(s) to:

Office of Finance
Refund Branch
Crystal Park One, Room 802B

UNITED STATES PATENT AND TRADEMARK OFFICE

COMMISSIONER FOR PATENTS
UNITED STATES PATENT AND TRADEMARK OFFICE
P.O. BOX 1450
ALEXANDRIA, VA 22313-1450
www.uspto.gov

MAILED

JUL 27 2004

Director's Office
Group 3700

Paper No. 12

In re Application of
Paul Justus Rodgers
Application No. 09/874,695
Filed: June 4, 2001
Attorney Docket No. 31043-pa

: DECISION ON PETITION

This is a decision on the petition filed on August 15, 2003 by which petitioner requests withdrawal of the examiner's holding that this application stands abandoned for failure to file a proper and timely request to rescind a previously filed nonpublication request. It is noted that petitioner previously filed a similar petition on October 10, 2002 which was not acted upon. The petition is considered pursuant to 37 CFR 1.181, and no fee is required.

The petition is granted.

Petitioner alleges that this application is not abandoned because a timely and proper request to rescind petitioner's previously filed nonpublication request was in fact filed on June 11, 2004. In support of this allegation, petitioner has furnished a copy of the nonpublication request and a post card receipt dated June 11, 2004 for the filing thereof. The copy of the nonpublication request that was filed on June 11, 2004 has now been reviewed and approved. Based upon this evidence, it is clear that this application is not abandoned.

Accordingly, the Notice of Abandonment is hereby vacated, the holding of abandonment is withdrawn, and the application is restored to pending status. After this decision is mailed and the application is restored to pending status, the application will be forwarded to the examiner for appropriate action.

PETITION GRANTED.

Richard A. Bertsch

Richard A. Bertsch, Director
Technology Center 3700

Bernhard Kreten, Esq & Associates
1331 Garden Highway
Suite 300
Sacramento, CA 95833

UNITED STATES PATENT AND TRADEMARK OFFICE

Commissioner for Patents
United States Patent and Trademark Office
P.O. Box 1450
Alexandria, VA 22313-1450
www.uspto.gov

Paper No. 11

BASF CORPORATION
ANNE GERRY SABOURIN
26701 TELEGRAPH ROAD
SOUTHFIELD, MI 48034-2442

COPY MAILED

APR 0 2 2004

OFFICE OF PETITIONS

In re Application of
Craig J. McClanahan
Application No. 09/874,698
Filed: June 5, 2001
Attorney Docket No. IN-5392

ON PETITION

This is a decision on the petition, filed March 25, 2004, to revive the above-identified application under the provisions of 37 CFR 1.137(b).

There is no indication that the person signing the instant petition was ever given a power of attorney or authorization of agent to prosecute the above-identified application. However, in accordance with 37 CFR 1.34(a), the signature of James R. Yee appearing on the petition shall constitute a representation to the United States Patent and Trademark Office that he is authorized to represent the particular party in whose behalf he acts. However, if Mr. Yee desires to receive future correspondence regarding this application, the appropriate power of attorney or authorization of agent must be submitted. A courtesy copy of this decision is being mailed to petitioner. Nevertheless, all future correspondence regarding this application file will be directed solely to the address of record until otherwise instructed.

The petition is **GRANTED**.

A review of the record discloses that the application became abandoned for a failure to reply in a timely manner to the non-final Office action mailed August 27, 2003, which set a shortened statutory period for reply of three (3) months. No extension of time under the provisions of 37 CFR 1.136(a) were obtained. A Notice of Abandonment was mailed on March 8, 2004. On March 25, 2004, an amendment and the present petition were filed.

37 CFR 1.137(b)(3) requires a statement that the entire delay in filing the required reply from the due date for the reply until the filing of a grantable petition pursuant to 37 CFR 1.137(b) was unintentional. While it is not apparent whether the person signing the statement of unintentional delay was in a position to have firsthand or direct knowledge of the facts and circumstances of the delay at issue, such statement is being treated as having been made as the result of a reasonable inquiry into the facts and circumstances of such delay. See 37 CFR 10.18(b) and Changes to Patent Practice and Procedure; Final Rule Notice, 62 Fed. Reg. 53131, 53178 (October 10, 1997), 1203 Off. Gaz. Pat. Office 63, 103 (October 21, 1997). In the event that such an inquiry has not been made, petitioner must make such an inquiry. If such inquiry results in the discovery that it is not correct that the entire delay in filing the required reply from the due date for the reply until the filing of a grantable petition pursuant to 37 CFR 1.137(b) was unintentional, petitioner must notify the Office.

Telephone inquiries concerning this decision may be directed to the undersigned at (703) 305-9220. All other inquiries regarding this application should be directed to the Technology Center.

The application file is being forwarded to Technology Center AU 2121 for consideration of the amendment filed March 25, 2004.

Sherry D. Brinkley

Sherry D. Brinkley
Petitions Examiner
Office of Petitions
Office of the Deputy Commissioner
for Patent Examination Policy

UNITED STATES
PATENT AND
TRADEMARK OFFICE

UNDER SECRETARY OF COMMERCE FOR INTELLECTUAL PROPERTY AND
DIRECTOR OF THE UNITED STATES PATENT AND TRADEMARK OFFICE
WASHINGTON, D.C. 20231
WWW.USPTO.GOV

MAR 1 2002

#5

DAVID M. CROMPTON
331 SECOND AVENUE SOUTH,
SUITE 895
MINNEAPOLIS, MN 55401

In re Application of Robert K. Rowe et al Serial No.: 09/874,740 Filed: June 5, 2001 For:Apparatus and Method of Biometric Determination Using Specialized Optical Spectroscopy Systems	PETITION DECISION

This is in response to applicants' petition filed December 3, 2001, to make the above-identified application special under the provisions of 37 CFR 1.102(d), as an invention for countering terrorism.

Applicant has satisfied the provisions set forth in M.P.E.P. 708.02 XI. Therefore the petition is **GRANTED**.

The application will be forwarded to the examiner for action on the merits commensurate with this decision.

Should there be any questions with regard to this letter please contact John E. Kittle by letter addressed to the Director, Technology Center 3700/2900, Washington, DC 20231, or by telephone at (703) 308-0873 or by facsimile transmission at (703) 308-3139.

John E. Kittle
Director, Technology Center 3700/2900

UNITED STATES PATENT AND TRADEMARK OFFICE

COMMISSIONER FOR PATENTS
UNITED STATES PATENT AND TRADEMARK OFFICE
WASHINGTON, D.C. 20231
www.uspto.gov

Paper No. 5

PAUL W MARTIN
NCR CORPORATION
LAW DEPARTMENT, ECD-2
101 W SCHANTZ AVENUE
DAYTON, OH 45479-0001

COPY MAILED

DEC 1 1 2001

OFFICE OF PETITIONS

In re Application of	:	
Tom R. Deaton	:	DECISION DISMISSING
Application No. 09/874,745	:	PETITION
Filed: June 5, 2001	:	
Attorney Docket No. WAB 01253	:	

This is a decision on the communication filed October 12, 2001, requesting that the above-identified application be accorded a filing date of June 4, 2001.

Petitioner alleges that the application was deposited in Express Mail service on June 4, 2001, under 37 CFR 1.10, and should be accorded that date as the filing date instead of the presently accorded filing date of June 5, 2001. In support, petitioner submits a copy of the Express Mail label receipt No. EL647402618US. The same Express Mail number appears on the copy of the original transmittal letter submitted with the present application.

37 CFR 1.10(a) states that:

> Any correspondence received by the Patent and Trademark Office (Office) that was delivered by the "Express Mail Post Office to Addressee" service of the United States Postal Service (USPS) will be considered filed in the Office on the date of deposit with the USPS. The date of deposit with the USPS is shown by the "date-in" on the "Express Mail" mailing label or other official USPS notation. If the USPS deposit date cannot be determined, the correspondence will be accorded the Office receipt date as the filing date. See § 1.6(a).

37 CFR 1.10(c) states that:

> (c) Any person filing correspondence under this section that was received by the Office and delivered by the "Express Mail Post Office to Addressee" service of the USPS, who can

BEST AVAILABLE COPY

show that there is a discrepancy between the filing date accorded by the Office to the correspondence and the date of deposit as shown by the "date-in" on the "Express Mail" mailing label or other official USPS notation, may petition the Commissioner to accord the correspondence a filing date as of the "date-in" on the "Express Mail" mailing label or other official USPS notation, provided that:

(1) The petition is filed promptly after the person becomes aware that the Office has accorded, or will accord, a filing date other than the USPS deposit date;

(2) The number of the "Express Mail" mailing label was placed on the paper(s) or fee(s) that constitute the correspondence prior to the original mailing by "Express Mail;" and

(3) The petition includes a true copy of the "Express Mail" mailing label showing the "date-in," and of any other official notation by the USPS relied upon to show the date of deposit.

As clearly stated in 37 CFR 1.10(a), the date of deposit with the United States Postal Service (USPS) is shown by the "date-in" on the "Express Mail" mailing label or other official USPS notation. Thus, any petition alleging that the PTO did not accord a paper the date of deposit in Express Mail service as the filing date must be accompanied by "a true copy of the 'Express Mail' mailing label showing the 'date-in,' and of any other official notation by the USPS relied upon to show the date of deposit." 37 CFR 1.10(c)(3).

In this case, the express mailing label provided does not establish a "date-in" pursuant to 37 CFR 1.10, as the "date-in" was left blank. In fact, all the spaces on the label that are normally filled in by an USPS employee are completely blank. Since the present petition is not accompanied by the evidence required by 37 CFR 1.10, the petition is <u>dismissed</u>.

Any request for reconsideration of this decision should be filed within **TWO MONTHS** of the date of this decision in order to be considered timely (see 37 CFR 1.181(f)) and should be addressed as follows:

By mail: U.S. Patent and Trademark Office
Box DAC
P.O. Box 2327
Arlington, VA 22202

By facsimile: (703) 308-6916
Attn: Office of Petitions

By hand: Office of Petitions
2201 South Clark Place
Crystal Plaza 4, Suite 3C23
Arlington, VA 22202

The application is being returned to Technology Center AU 2876 for examination in due course with the presently accorded filing date of June 5, 2001.

Telephone inquires specific to this matter should be directed to Wan Laymon at (703) 306-5685.

Sherry Brinkley
Petitions Examiner
Office of Petitions
Office of the Deputy Commissioner
for Patent Examination Policy

UNITED STATES PATENT AND TRADEMARK OFFICE

Commissioner for Patents
United States Patent and Trademark Office
P.O. Box 1450
Alexandria, VA 22313-1450
www.uspto.gov

Paper No. 7

Attn: Nestor F. Ho
Office of Intellectual Property Counsel
3M Innovative Properties Company
PO Box 33427
St. Paul, Minnesota 55133-3427

COPY MAILED

NOV 1 2 2003

OFFICE OF PETITIONS

In re Application of :
James M. Battiato et al. :
Application No. 09/874,784 : ON PETITION
Filed: June 5, 2001 :
Attorney Docket No. 55173US002 :

This is a decision on the petition under 37 CFR 1.137(b), filed November 3, 2003, to revive the above-identified application.

The petition is granted.

The above-identified application became abandoned for failure to reply in a timely manner to the Notice to File Missing Parts of Application (Notice) mailed August 6, 2001, which set a period for reply of Two Months from the mail date of the Notice. No extensions of time under the provisions of 37 CFR 1.136 has been obtained. Accordingly, the application became abandoned on October 7, 2001.

The application file is being forwarded to the Office of Initial Patent Examination Division for further processing.

Telephone inquiries concerning this decision should be directed to Latrice Bond at (703) 308-6911.

Latrice Bond

Latrice Bond
Petitions Examiner
Office of Petitions
Office of the Deputy Commissioner
for Patent Examination Policy

UNITED STATES PATENT AND TRADEMARK OFFICE

COMMISSIONER FOR PATENTS
UNITED STATES PATENT AND TRADEMARK OFFICE
WASHINGTON, D.C. 20231
www.uspto.gov

Paper No. 3

Needham James Boddie, II
MYERS BIGEL SIBLEY & SAJOVEC
P.O. Box 37428
Raleigh,, NC 27627

MAILED

MAY 09 2002

Technology Center 2100

In re Application of:	)	
Brian Webb, et al.	)	
Application No. 09/874,802	)	
Filed: June 5, 2001	)	
For: SYSTEMS, METHODS AND COMPUTER PROGRAM PRODUCTS FOR ACCESSING DEVICES ON PRIVATE NETWORKS VIA CLIENTS ON A PUBLIC NETWORK	)	**DECISION ON REQUEST FOR WITHDRAWAL AS ATTORNEY**

This is a decision on the Request To Withdraw from Representation filed February 22, 2002.

A grantable request to withdraw as attorney of record should indicate thereon the present mailing addresses of the attorney(s) who is/are withdrawing from the record and of the applicant. The request for withdrawal must be signed by every attorney seeking to withdraw or contain a clear indication that one attorney is signing on behalf of another/others. A request to withdraw will not be approved unless at least 30 (thirty) days would remain between the date of approval and the later of the expiration date of a time to file a response or the expiration date of the maximum time period which can be extended under 37 C.F.R. § 1. 136(a). The effective date of withdrawal being the date of decision and not the date of request. See M.P.E.P. § 402.06. **37 C.F.R. § 1.36 further requires that the applicant or patent owner be notified of the withdrawal of the attorney or agent.**

The request does not indicate thereon the present mailing address of the attorney(s) who is/are withdrawing from the record. The request is signed by Needham James Boddie, II alone and does not contain a clear indication that Mr. Boddie is authorized to sign on behalf of the other attorneys of record and is signing on behalf of the other attorneys of record. Furthermore, there is no indication that Applicant has been notified of the request for withdrawal.

Accordingly, the request is **DENIED**.

All future communications from the United States Patent and Trademark Office (Office) will continue to be directed to the above-listed address until otherwise notified by applicant. Applicant is reminded of the obligation to promptly notify the Office of any change in correspondence address to ensure receipt of all communications from the Office.

Vincent N. Trans
Special Programs Examiner
Technology Center 2100
Computer Architecture, Software,
and Electronic Commerce
(703) 305-9750

UNITED STATES PATENT AND TRADEMARK OFFICE

COMMISSIONER FOR PATENTS
UNITED STATES PATENT AND TRADEMARK OFFICE
WASHINGTON, D.C. 20231
www.uspto.gov

Paper No. 6

Myers Bigel Sibley & Sajovec
P. O. Box 37428
Raleigh, NC 27627

MAILED

JUN 1 4 2002

Technology Center 2100

In re Application of: Brian T. Webb, et al.)
Application No. 09/874,802)
Filed: June 5, 2001)
For: SYSTEMS, METHODS AND)
COMPUTER PROGRAM)
PRODUCTS FOR ACCESSING)
DEVICES ON PRIVATE)
NETWORKS VIA CLIENTS ON A)
PUBLIC NETWORK)

DECISION ON REQUEST FOR WITHDRAWAL AS ATTORNEY

This is a decision on the Request To Withdraw from Representation filed May 2, 2002 and the Supplemental Request to Withdraw filed June 11, 2002.

A grantable request to withdraw as attorney of record should indicate thereon the present mailing addresses of the attorney(s) who is/are withdrawing from the record and of the applicant. The request for withdrawal must be signed by every attorney seeking to withdraw or contain a clear indication that one attorney is signing on behalf of another/others. A request to withdraw will not be approved unless at least 30 (thirty) days would remain between the date of approval and the later of the expiration date of a time to file a response or the expiration date of the maximum time period which can be extended under 37 C.F.R. § 1. 136(a). The effective date of withdrawal being the date of decision and not the date of request. See M.P.E.P. § 402.06. 37 C.F.R. § 1.36 further requires that the applicant or patent owner be notified of the withdrawal of the attorney or agent.

The request is **GRANTED**.

All future communications from the Office will be directed to the below-listed address until otherwise notified by applicant. This correspondence address is provided by the withdrawn attorney(s). Applicant is reminded of the obligation to promptly notify the Patent and Trademark Office (Office) of any change in correspondence address to ensure receipt of all communications from the Office.

Vincent N. Trans
Special Programs Examiner
Technology Center 2100
Computer Architecture, Software,
and Electronic Commerce
(703) 305-9750

cc: Don Witmer, Chairman and CEO
Home Director, Inc. C/o Digital Interiors, Inc.
7132 Santa Teresa Blvd.
San Jose, CA 95139

UNITED STATES PATENT AND TRADEMARK OFFICE

Commissioner for Patents
United States Patent and Trademark Office
Washington, D.C. 20231
www.uspto.gov

Paper No. 3

Needham James Boddie, II
MYERS BIGEL SIBLEY & SOJOVEC
Post Office Box 37428
Raleigh, NC 27627

MAIL

MAY 0 7 2002

DIRECTOR OFFICE
TECHNOLOGY CENTER 2100

In re Application of:)
KNOLES et al.)
Application No. 09/874,803)
Filed: June 5, 2001)
For: SYSTEMS, METHODS AND)
COMPUTER PROGRAM)
PRODUCTS FOR RESPONDING TO)
CLIENT REQUESTS DIRECTED TO
NETWORKED EMBEDDED
DEVICES VIA PROXY SERVICES

DECISION ON REQUEST FOR WITHDRAWAL AS ATTORNEY

This is a decision on the Request To Withdraw from Representation filed February 21, 2002..

A grantable request to withdraw as attorney of record should indicate thereon the present mailing addresses of the attorney(s) who is/are withdrawing from the record and of the applicant. **The request for withdrawal must be signed by every attorney seeking to withdraw or contain a clear indication that one attorney is signing on behalf of another/others**. A request to withdraw will not be approved unless at least 30 (thirty) days would remain between the date of approval and the later of the expiration date of a time to file a response or the expiration date of the maximum time period which can be extended under 37 C.F.R. § 1. 136(a). The effective date of withdrawal being the date of decision and not the date of request. See M.P.E.P. § 402.06. **37 C.F.R. § 1.36 further requires that the applicant or patent owner be notified of the withdrawal of the attorney or agent.**

The request is signed by Needham James Boddie, II alone and does not contain a clear indication that Mr. Boddie is authorized to sign on behalf of the other attorneys of record and is signing on behalf of the other attorneys of record. Furthermore, there is no indication that Applicant has been notified of the request for withdrawal.

Accordingly, the request is **DENIED**.

All future communications from the United States Patent and Trademark Office (Office) will continue to be directed to the above-listed address until otherwise notified by applicant. Applicant is reminded of the obligation to promptly notify the Office of any change in correspondence address to ensure receipt of all communications from the Office.

Vincent N. Trans
Special Programs Examiner
Technology Center 2100
Computer Architecture, Software,
and Electronic Commerce
(703) 305-9750

UNITED STATES PATENT AND TRADEMARK OFFICE

COMMISSIONER FOR PATENTS
UNITED STATES PATENT AND TRADEMARK OFFICE
WASHINGTON, D.C. 20231
www.uspto.gov

Paper No. 5

Needham James Boddie, II
MYERS BIGEL SIBLEY & SAJOVEC
Post Office Box 37428
Raleigh, NC 27627

MAIL

JUL 17 2002

DIRECTOR OFFICE
TECHNOLOGY CENTER 2100

In re Application of: Knowles, et al.	)	
Application No. 09/874,803	)	
Filed: June 5, 2001	)	
For: SYSTEMS, METHODS AND COMPUTER PROGRAM PRODUCTS FOR RESPONDING TO CLIENT REQUESTS DIRECTED TO NETWORKED EMBEDDED DEVICES VIA PROXY SERVICES	)	**DECISION ON REQUEST FOR WITHDRAWAL AS ATTORNEY**

This is a decision on the Request To Withdraw from Representation filed June 11, 2002.

A grantable request to withdraw as attorney of record should indicate thereon the present mailing addresses of the attorney(s) who is/are withdrawing from the record and of the applicant. The request for withdrawal must be signed by every attorney seeking to withdraw or contain a clear indication that one attorney is signing on behalf of another/others. A request to withdraw will not be approved unless at least 30 (thirty) days would remain between the date of approval and the later of the expiration date of a time to file a response or the expiration date of the maximum time period which can be extended under 37 C.F.R. § 1. 136(a). The effective date of withdrawal being the date of decision and not the date of request. See M.P.E.P. § 402.06. 37 C.F.R. § 1.36 further requires that the applicant or patent owner be notified of the withdrawal of the attorney or agent.

The request is **GRANTED**.

All future communications from the United States Patent and Trademark Office (Office) will be directed to the below-listed address until otherwise notified by applicant. Applicant is reminded of the obligatio to promptly notify the Office of any change in correspondence address to ensure receipt of all communications from the Office.

Vincent N. Trans
Special Programs Examiner
Technology Center 2100
Computer Architecture and Software
(703) 305-9750

cc: Don Witmer, Chairman and CEO
Home Director, Inc. c/o Digital Interiors, Inc.
7132 Santa Teresa Blvd.
San Jose, CA 95139

UNITED STATES PATENT AND TRADEMARK OFFICE

Commissioner for Patents
United States Patent and Trademark Office
Washington, D.C. 20231
www.uspto.gov

Paper No. 4

WARE FRESSOLA VAN DER SLUYS &
ADOLPHSON, LLP
BRADFORD GREEN BUILDING 5
755 MAIN STREET, P O BOX 224
MONROE CT 06468

COPY MAILED

JUL 1 7 2002

OFFICE OF PETITIONS

In re Application of :
Herbert Bechtold and Jochen :
Gabriel :
Application No. 09/874,844 : DECISION ON PETITION
Filed: June 5, 2001 :
Attorney Docket No. 870-003- :
109.2 :
Title: INJECTION DEVICE :

This is a decision on the "Response to Notice of Omitted Items", filed January 28, 2002, which is properly treated as a petition requesting that Figures 22, 23, and 24 (drawing sheets 12/17 and 13/17) be accorded a filing date of June 5, 2001, as part of the original disclosure. Alternatively, the petitioner requests that since the current application is a divisional, and the parent was incorporated by reference, the drawings (which are identical to that found in the parent application) should not constitute new matter if submitted after filing.

On June 5, 2001, the above-identified application was filed. On November 6, 2001, the Office of Initial Patent Examination mailed a Notice of Omitted Items (Notice), stating that the application had been accorded a filing date of June 5, 2001, and advising applicant that Figures 22, 23, and 24 (drawings sheets 12/17 and 13/17) appeared to have been omitted.

In response, on January 28, 20021, applicants filed the present petition, along with an authorization to charge the deposit

1 With a certificate of mailing dated November 20, 2001.

account for the petition fee. The petition is further accompanied by the missing drawings, as well as a copy of applicants' postcard receipt acknowledging receipt of seventeen (17) sheets of drawings in the United States Patent and Trademark Office (Office) on June 5, 2001. Applicants request that Figures 22, 23, and 24 be accorded a filing date of June 5, 2001.

Upon review of the record, Figures 22, 23, and 24, deposited on June 5, 2001, have not been located among the application papers. However, the evidence is convincing that seventeen sheets of drawings were filed on June 5, 2001, and subsequently misplaced by the Office. Therefore, the application is entitled to a filing date of June 5, 2001, with Figures 22, 23, and 24 as part of the original disclosure.

Accordingly, the petition is **GRANTED**.

As this petition was granted, the alternate petition will not be considered.

The Notice mailed November 6, 2001 was sent in error and is hereby **VACATED**. Therefore, no petition fee is necessary, and petitioner's Deposit Account has not been charged in the amount of $130.00 for the petition fee.

The application file is being returned to the Office of Initial Patent Examination for further processing with a filing date of June 5, 2001, using Figures 1-21 and 25-31 which have been located in the file, in addition to Figures 22, 23, and 24 which were included with the instant petition, and indicating in the Office records that all seventeen (17) sheets of drawings were present in the application on filing.

Any inquiries related to this decision should be directed to Petitions Attorney Paul Shanoski at (703) 305-0011.

Beverly M. Flanagan
Supervisory Petitions Examiner
Office of Petitions
Office of the Deputy Commissioner
for Patent Examination Policy

UNITED STATES PATENT AND TRADEMARK OFFICE

Commissioner for Patents
United States Patent and Trademark Office
P.O. Box 1450
Alexandria, VA 22313-1450
www.uspto.gov

WARE FRESSOLA VAN DER SLUYS & ADOLPHSON, LLP
BRADFORD GREEN, BUILDING 5
755 MAIN STREET, P.O. 224
MONROE, CT 06468

COPY MAILED
AUG 1 8 2008

In re Application of	:	
Kurt KLEMM	:	
Application No. 09/874,844	:	DECISION ON PETITION
Filed: June 5, 2001	:	
Docket No. 870-003-109.2	:	

This is a decision on the petition under the unintentional provisions of 37 CFR 1.137(b), filed March 24, 2008, to revive the above-identified application.

The petition is **GRANTED**.

The application became abandoned for failure to reply in a timely manner to the non-final Office action mailed, January 8, 2007, which set a shortened statutory period for reply of three (3) months. No extensions of time under the provisions of 37 CFR 1.136(a) were obtained. Accordingly, the application became abandoned on April 9, 2007.

The petition satisfies the requirements of 37 CFR 1.137(b) in that petitioner has supplied (1) the reply in the form of an amendment, (2) the petition fee of $770; and (3) an the required statement of unintentional delay.

Telephone inquiries concerning this decision should be directed to Diane Goodwyn at (571) 272-6735.

This application is being referred to Technology Center AU 3767 for appropriate action by the Examiner in the normal course of business on the reply received March 24, 2008.

Thurman Page
Petitions Examiner
Office of Petitions

UNITED STATES PATENT AND TRADEMARK OFFICE

Commissioner for Patents
United States Patent and Trademark Office
P.O. Box 1450
Alexandria, VA 22313-1450
www.uspto.gov

WARE FRESSOLA VAN DER SLUYS & ADOLPHSON, LLP
BRADFORD GREEN, BUILDING 5
755 MAIN STREET, P.O. 224
MONROE, CT 06468

COPY MAILED

SEP 22 2008

OFFICE OF PETITIONS

In re Application of	:	
Herbert **BECHTOLD**, et al	:	CORRECTED
Application No. 09/874,844	:	DECISION ON PETITION
Filed: June 5, 2001	:	
Docket No. 870-003-109.2	:	

This is a decision on the petition under the unintentional provisions of 37 CFR 1.137(b), filed March 24, 2008, to revive the above-identified application.

The petition is **GRANTED**.

The application became abandoned for failure to reply in a timely manner to the non-final Office action mailed, January 8, 2007, which set a shortened statutory period for reply of three (3) months. No extensions of time under the provisions of 37 CFR 1.136(a) were obtained. Accordingly, the application became abandoned on April 9, 2007.

The petition satisfies the requirements of 37 CFR 1.137(b) in that petitioner has supplied (1) the reply in the form of an amendment, (2) the petition fee of $770; and (3) an the required statement of unintentional delay.

Telephone inquiries concerning this decision should be directed to Diane Goodwyn at (571) 272-6735.

This application is being referred to Technology Center AU 3767 for appropriate action by the Examiner in the normal course of business on the reply received March 24, 2008.

Thurman K. Page

Thurman Page
Petitions Examiner
Office of Petitions

UNITED STATES PATENT AND TRADEMARK OFFICE

Commissioner for Patents
United States Patent and Trademark Office
P.O. Box 1450
Alexandria, VA 22313-1450
www.uspto.gov

Michael P. Farrell
1937 Fays Lane
Sugar Grove IL 60554

COPY MAILED

JUN 1 2 2008

OFFICE OF PETITIONS

In re Application of :
Michael Farrell :
Application No. 09/874,849 : ON PETITION
Filed: June 5, 2001 :
Title: Methods For Producing Nucleic Acid Hybridization Probes that Amplify Hybridization Signal by Promoting Network Formation

This is a decision on the petition under 37 CFR 1.181 to withdraw the holding of abandonment, filed April 22, 2008. Petitioner has also filed a requested treatment under 37 CFR 1.137(a).

The petition to withdraw the holding of abandonment is **Dismissed**.

The petition to revive under 37 CFR 1.137(a) is **Dismissed**.

Petitioner maintains that the inventor who filed the application pro se changed his correspondence address on two occasions but failed to submit a change of address with the U.S. Post Office the second time he moved. Petitioner failed to submit a change of address with the Office. Petitioner maintains that he did not receive the restriction requirement mailed on September 16, 2002 and the Notice of Abandonment mailed on December 23, 2003. Petitioner maintains he was not aware that he should submit a change of address with the Office.

Petition Under 37 CFR 1.181 To Withdraw the Holding of Abandonment

Any request for reconsideration should be filed within **TWO MONTHS** of the mailing date of this decision in order to be considered timely. 37 CFR 1.181(f). This time period may not be extended pursuant to 37 CFR 1.136.

This above-identified application was held abandoned for failure to timely file a response to the restriction requirement which was mailed on September 16, 2002. The restriction requirement set a one (1) month shortened statutory period for reply. A reply was not received. Accordingly, this application became abandoned on October 17, 2002. A Notice of Abandonment was mailed on December 23, 2003.

The submission of the petition to withdraw the holding of abandonment is untimely. 37 CFR 1.181(f) provides that, inter alia, except as otherwise provided, any petition not filed within 2 months of the mail date of a notice of abandonment (the action complained of) of may be dismissed as untimely. The Notice of Abandonment was mailed on December 23, 2003, a petition was not filed in this application until April 22, 2008, over four years after the mailing of the Notice of Abandonment. Thus, the petition is untimely and will not be considered under 37 CFR 1.181.

Petition Under 37 CFR 1.137(a) To Revive Under the Unavoidable Standard.

The petition under 37 CFR 1.137(a) is **Dismissed**.

Any request for reconsideration must be submitted within TWO (2) MONTHS from the mail date of this decision. Extensions of time under 37 CFR § 1.136(a) are permitted. The reconsideration request should include a cover letter entitled "Renewed Petition under 37 CFR § 1.137(a)." This is **not** a final agency action within the meaning of 5 U.S.C. § 704.

A grantable petition under 37 CFR 1.137(a) must be accompanied by: (1) the required reply, unless previously filed; (2) the petition fee as set forth in 37 CFR 1.17(l); (3) a showing to the satisfaction of the Director that the entire delay in filing the required reply from the due date for the reply until the filing of a grantable petition pursuant to 37 CFR 1.137(a) was unavoidable; and (4) any terminal disclaimer (and fee as set forth in 37 CFR 1.20(d)) required pursuant to 37 CFR 1.137(d). The instant petition lacks item(s) (3).

Pursuant to petitioner's request deposit account no. 02-4550 will be charged the $255.00 petition fee. If petitioner is no longer entitled to small entity status, a statement and authorization to charge the appropriate fee should be provided.

As to item (3), the showing of record is not sufficient to establish to the satisfaction of the Director that the delay was unavoidable within the meaning of 37 CFR §1.137(a).

The Office may revive an abandoned application if the delay in responding to the relevant outstanding office requirement is shown to the satisfaction of the Commissioner to have been "unavoidable." See, 37 CFR § 1.137(a)(3). Decisions on reviving abandoned applications have adopted the reasonably prudent person standard in determining if the delay was unavoidable. Ex parte Pratt, 1887 Dec. Comm'r Pat. 31, 32-33 (Comm'r Pat. 1887) (the term "unavoidable" is applicable to ordinary human affairs, and requires no more greater care or diligence than is generally used and observed by prudent and careful men in relation to their most important business."); In re Mattullath, 38 App. D.C. 497, 514-15 (D.C. Cir. 1912); Ex parte Henrich, 1913 Dec. Comm'r Pat. 139, 141 (Comm'r Pat. 1913). In addition, decisions on revival are made on a "case by case basis, taking all the facts and circumstances into account." Smith v. Mossinghoff, 671 F.2d 533, 538, 213 USPQ 977, 982 (D.C. Cir. 1982). A petition to revive an application as unavoidably abandoned cannot be granted where petitioner has failed to meet his or her burden of establishing the cause of the unavoidable delay. Haines v. Quigg, 673 F. Supp. 314, 5 USPQ2D 1130 (N.D. Ind. 1987).

The showing of record is inadequate to establish unavoidable delay within the meaning of 35 U.S.C. § 133 and 37 CFR 1.137(a).[1] Specifically, an application is "unavoidably" abandoned only where petitioner, or counsel for petitioner, takes all action necessary for a proper response to the outstanding Office action, but through the intervention of unforeseen circumstances, such as failure of mail, telegraph, facsimile, or the negligence of otherwise reliable employees, the response is not timely received in the Office.[2]

Where an application becomes abandoned as a consequence of a change of correspondence address (the Office action being mailed to the old, uncorrected address and failing to reach the applicant in sufficient time to permit a timely reply) an adequate showing of "unavoidable" delay will require a showing that due care was taken to adhere to the requirement for prompt notification in each concerned application of the change of address (see MPEP § 601.03), and must include an adequate showing that a timely notification of the change of address was filed in the application concerned, and in a manner reasonably calculated to call attention to the fact that it was a notification of a change of address. The lack of notification, or belated notification, to the U.S. Patent and Trademark Office of the change in correspondence address does not constitute unavoidable delay. See MPEP 711.03(c).

Inventor Farrell's failure to change the correspondence address with the Office because he was not aware that he should is not unavoidable. A delay resulting from the lack of

---

[1]See MPEP 711(c)(III)(c)(2) for a discussion of the requirements for a showing of unavoidable delay.

[2]Ex parte Pratt, 1887 Dec. Comm'r Pat. 31 (Comm'r Pat. 1887).

knowledge or improper application of the patent statue,rules of practice or the MPEP does not constitute an "unavoidable" delay.[3]

Accordingly, a finding of unavoidable delay is not warranted.

ALTERNATIVE VENUE

Petitioner is strongly encouraged to consider filing a petition under 37 CFR 1.137(b) to revive an unintentionally abandoned application instead of filing a renewed petition under 37 CFR 1.181 or a petition under 37 CFR 1.137(a).

A grantable petition pursuant to 37 CFR 1.137(b) must be accompanied by:

> (1) The reply required to the outstanding Office action or notice, unless previously filed. In nonprovisional utility application abandoned for failure to respond to a non-final Office action, the required reply may be met by filing either (A) an argument or amendment under 37 CFR 1.111 or (B) a continuing application under 37 CFR 1.53(b).
>
> (2) The petition fee as set forth in 37 CFR 1.17(m), $770.00 for a small entity;
>
> (3) A statement that the entire delay in filing the required reply from the due date for the reply until the filing of a grantable petition was unintentional. The Director may require additional information where there is a question whether the delay was unintentional.

A form for filing a petition to revive an unintentionally abandoned application accompanies this decision for petitioner's convenience. If petitioner desires to file a petition under 37 CFR 1.137(b) instead of filing a request for reconsideration, petitioner must complete the enclosed petition form (PTO/SB/64) and pay the $770.00 (for small entity) petition fee.

Further correspondence with respect to this matter should be addressed as follows:

---

[3]See Haines v. Quigg, 673 F. Supp. 314, 317, 5 USPQ2D 1130, 1132 (N.D. Ind. 1987); Vincent v. Mossinghoff, 230 USPQ 621, 624 (D.D.C. 1985) Smith v. Diamond, 209 USPQ 1091 (D.D.C. 1978); Ex parte Murray, 1891 Dec. Comm'r Pat. 130,131 (1891).

By mail:	Mail Stop Petition Commissioner for Patents P.O. Box 1450 Alexandria, VA 22313-1450
By facsimile:	(571) 273-8300
By delivery service: (FedEx, UPS, DHL, etc.)	U.S. Patent and Trademark Office Customer Service Window, Randolph Building 401 Dulany Street Alexandria, VA 22314

Telephone inquiries concerning this matter should be directed to the undersigned at (571) 272-3215.

Charlema R. Grant

Charlema R. Grant
Petitions Attorney
Office of Petitions

Best Available Copy

UNITED STATES PATENT AND TRADEMARK OFFICE

Commissioner for Patents
United States Patent and Trademark Office
P.O. Box 1450
Alexandria, VA 22313-1450
www.uspto.gov

KLARQUIST SPARKMAN, LLP
121 S.W. SALMON STREET
SUITE 1600
PORTLAND, OR 97204

COPY MAILED
SEP 15 2008

In re Application of
Michael Farrell
Application No. 09/874,849
Filed: June 5, 2001
Title: Methods For Producing Nucleic Acid Hybridization Probes that Amplify Hybridization Signal by Promoting Network Formation

ON PETITION

This is a decision on the petition under the unintentional provisions of 37 CFR 1.137(b), filed August 28, 2008, to revive the above-identified application.

The petition to revive under 37 CFR 1.137(b) is **GRANTED**.

This above-identified application became abandoned for failure to timely file a reply to a Restriction Requirement mailed September 16, 2002. The Office Action set a one (1) month shortened statutory period for reply. No extensions of time were obtained under the provisions of 37 CFR 1.136(a). Accordingly, this application became abandoned on October 17, 2002. A Notice of Abandonment was mailed on December 23, 2003. Petitions under 37 CFR 1.181 and 1.137(a) were dismissed on June 12, 2008.

The petition satisfies the requirements of 37 CFR 1.137(b) in that petitioner has supplied (1) the reply in the form of a reply to the restriction requirement , (2) the petition fee of 1540.00 , and (3) a proper statement of unintentional delay.

It is not apparent whether the person signing the statement of unintentional delay was in a position to have firsthand or direct knowledge of the facts and circumstances of the delay at issue. Nevertheless, such statement is being treated as having been made as the result of a reasonable inquiry into the facts and circumstances of such delay. See 37 CFR 10.18(b). In the event that such an inquiry has not been made, petitioner must make such an inquiry. If such inquiry results in the discovery that it is not correct that

Best Available Copy

the entire delay in filing the required reply from the due date for the reply until the filing of a grantable petition pursuant to 37 CFR 1.137(b) was unintentional, petitioner must notify the Office.

This application is being referred to Technology Center AU 1634 for appropriate action by the Examiner in the normal course of business on the reply received

Telephone inquiries concerning this decision should be directed to the undersigned at (571) 272- 3215.

Charlema Grant

Charlema R. Grant
Petitions Attorney
Office of Petitions

UNITED STATES PATENT AND TRADEMARK OFFICE

#7

UNITED STATES DEPARTMENT OF COMMERCE
United States Patent and Trademark Office
Address: COMMISSIONER FOR PATENTS
P.O. Box 1450
Alexandria, Virginia 22313-1450
www.uspto.gov

APPLICATION NO.	FILING DATE	FIRST NAMED INVENTOR	ATTORNEY DOCKET NO.	CONFIRMATION NO.
09/874,891	06/04/2001	Janick Bergeron	51029-P001	3751

25943 7590 02/26/2004

SCHWABE, WILLIAMSON & WYATT, P.C.
PACWEST CENTER, SUITES 1600-1900
1211 SW FIFTH AVENUE
PORTLAND, OR 97204

EXAMINER
LEROUX, ETIENNE PIERRE

ART UNIT	PAPER NUMBER
2171	

DATE MAILED: 02/26/2004

Please find below and/or attached an Office communication concerning this application or proceeding.

UNITED STATES PATENT AND TRADEMARK OFFICE

COMMISSIONER FOR PATENTS
UNITED STATES PATENT AND TRADEMARK OFFICE
P.O. BOX 1450
ALEXANDRIA, VA 22313-1450
www.uspto.gov

Paper No. 7

SCHWABE WILLIAMSON & WYATT, P.C.
PACWEST CENTER, SUITE 1600-1900
1211 SW FIFTH AVENUE
PORTLAND, OR 97204

COPY MAILED

FEB 26 2004

OFFICE OF PETITIONS

In re Application of	:DECISION GRANTING PETITION
Janick Bergeron	:UNDER 37 CFR 1.137(b) AND
Application No. 09/874,891	:NOTICE RESETTING PERIOD FOR
Filed: June 4, 2001	:REPLY TO NONFINAL OFFICE
Attorney Docket No. 51029-P001	:ACTION

This is a decision on the petition, filed June 11, 2003, which is being treated as a petition under 37 CFR 1.137(b) to revive the instant nonprovisional application for failure to timely notify the U.S. Patent and Trademark Office (USPTO) of the filing of an application in a foreign country or under a multinational treaty that requires publication of applications eighteen months after filing. *See* 37 CFR 1.137(f).

The petition is **GRANTED**.

Petitioner states that the instant nonprovisional application is the subject of an application filed in an eighteen month publication country on June 4, 2002. However, the USPTO was unintentionally not notified of this filing within 45 days subsequent to the filing of the subject application in an eighteen month publication country.

In view of the above, this application became abandoned pursuant to 35 U.S.C. § 122(b)(2)(B)(iii) and 37 CFR 1.213(c) for failure to timely notify the USPTO of the filing of a counterpart application in a foreign country or under a multinational treaty that requires publication of applications eighteen months after filing.

A petition to revive an application abandoned pursuant to 35 U.S.C. 122(b)(2)(B)(iii) for failure to notify the Office of a foreign filing must be accompanied by:

(1) the required reply which is met by the notification of such filing in a foreign country or under a multinational treaty;

(2) the petition fee as set forth in 37 CFR 1.17(m); and
(3) a statement that the entire delay in filing the required reply from the due date of the reply until the filing of a grantable petition was unintentional.

The instant petition has been found to be in compliance with 37 CFR 1.137(b). Accordingly, the failure to timely notify the USPTO of a foreign or international filing within 45 days after the date of filing of such foreign or international application as provided by 35 U.S.C. § 122(b)(2)(B)(iii) and 37 CFR 1.213(c) is accepted as having been unintentionally delayed.

The previous Request and Certification under 35 U.S.C. § 122(b)(2)(B)(i) has been previously rescinded.

There is no indication that a reply to the non-final Office action of September 8, 2003 has been filed. Accordingly, a shortened statutory period of three (3) months for reply to the non-final Office action of September 8, 2003 is restarted with the mailing date of this decision. Extensions of time pursuant to the provisions of 37 CFR 1.136(a) are permitted. Failure to timely reply within the period restarted by this decision will result in the abandonment of this application.

Any inquiries concerning this decision may be directed to Wan Laymon at (703) 306-5685.

This application is being forwarded to Technology Center Art Unit 2171 to await a reply to the non-final Office action, the period of which is restarted to run from the mailing date of this decision on petition as noted above.

Frances Hicks
Lead Petitions Examiner
Office of Petitions
Office of the Deputy Commissioner
for Patent Examination Policy

UNITED STATES PATENT AND TRADEMARK OFFICE

Commissioner for Patents
United States Patent and Trademark Office
P.O. Box 1450
Alexandria, VA 22313-1450
www.uspto.gov

Paper No.

OSHA LIANG L.L.P./SUN
1221 MCKINNEY
SUITE 2800
HOUSTON TX 77010

COPY MAILED

FEB 16 2007

OFFICE OF PETITIONS

In re Patent No.	:	DECISION ON REQUEST
Von Klopp et al.	:	FOR RECONSIDERATION OF
Issue Date: August 29, 2006	:	PATENT TERM ADJUSTMENT
Application No. 09/874,893	:	and
Filed: June 5, 2001	:	NOTICE OF INTENT TO ISSUE
Atty Docket No. 16159/007001	:	CERTIFICATE OF CORRECTION

This is a decision on the "REQUEST FOR REINSTATEMENT OF PATENT TERM ADJUSTMENT UNDER 37 C.F.R. § 1.705(d)" filed October 30, 2006. Patentees request reinstatement of 99 days of PTA to correct the Patent Term Adjustment shown in the Issue Notification (and on the patent) from eight hundred seventy-four (874) days to nine hundred seventy-three (973) days.

The request for reconsideration of the patent term adjustment indicated in the patent is **GRANTED**.

The patent term adjustment indicated in the patent is to be corrected by issuance of a certificate of correction showing a revised Patent Term Adjustment of nine hundred seventy-three (973) days.

On August 29, 2006, the above-identified application matured into U.S. Patent No. 7,099,939. The instant request for reconsideration filed Monday, October 30, 2006 was timely filed within 2 months of the date the patent issued. See § 1.705(d). The Patent issued with a revised Patent Term Adjustment of 874 days. Patentees dispute the reduction of 99 days associated with the filing of a declaration after the mailing of the notice of allowance. Patentees argue that no reduction is warranted, as the declaration filed after the mailing of the notice of allowance was a courtesy copy of the declaration originally filed on August 24, 2001, which was resubmitted at the request of the examiner. Patentees submit evidence to support a

conclusion that the original declaration was filed with a certificate of mailing dated August 24, 2001 in response to the Notice to File Missing Parts mailed August 3, 2001; no Notice was ever sent to applicants that the Office had not received a response to the Notice to File Missing Parts (i.e., the application was never abandoned by the Office), and that the declaration faxed to the examiner on May 23, 2006 is an exact duplicate of the originally submitted declaration.

Patentees' contention is well taken. The record supports a conclusion that the originally submitted declaration was lost by the Office. Under the circumstances of the resubmission, it is appropriate to treat the declaration as submitted on or about August 24, 2001, prior to the mailing of the Notice of Allowance on April 10, 2006. Moreover, the resubmission of the missing declaration on May 23, 2006 did not constitute a failure to engage within the meaning of 37 CFR 1.704(c)(10).

In view thereof, the patent term adjustment indicated on the patent should be nine hundred seventy-three (973) days.

The Office acknowledges submission of the $200.00 fee set forth in 37 CFR 1.18(e). No additional fees are required.

The application file is being forwarded to the Certificates of Correction Branch for issuance of a certificate of correction in order to rectify this error. The Office will issue a certificate of correction indicating that the term of the above-identified patent is extended or adjusted by NINE HUNDRED SEVENTY-THREE (973) days.

Telephone inquiries specific to this matter should be directed to the undersigned at (571) 272-3219.

Nancy Johnson
Senior Petitions Attorney
Office of Petitions

Enclosure: Copy of DRAFT Certificate of Correction

UNITED STATES PATENT AND TRADEMARK OFFICE

CERTIFICATE OF CORRECTION

PATENT : 7,099,939 B2

DATED : August 29, 2006

INVENTOR(S) : von Klopp et al.

DRAFT

It is certified that error appears in the above-identified patent and that said Letters Patent is hereby corrected as shown below:

On the cover page,

[*] Notice: Subject to any disclaimer, the term of this patent is extended or adjusted under 35 USC 154(b) by (874) days

Delete the phrase "by 874" and insert – by 973 days--

UNITED STATES PATENT AND TRADEMARK OFFICE

Commissioner for Patents
United States Patent and Trademark Office
P.O. Box 1450
Alexandria, VA 22313-1450
www.uspto.gov

MACMILLAN SOBANSKI & TODD
ONE MARITIME PLAA FOURTH FLOOR
720 WATER STREET
TOLEDO OH 43604-1619

COPY MAILED

SEP 20 2005

OFFICE OF PETITIONS

In re Application of	:	
Forrest P. Gauthier et al	:	
Application No. 09/874,895	:	ON PETITION
Filed: June 5, 2001	:	
Attorney Docket No. 1-27274	:	

This is a decision on the petition, filed September 16, 2005, under 37 CFR 1.313(c)(3) to withdraw the above-identified application from issue after payment of the issue fee.

The petition is **GRANTED**.

The above-identified application is withdrawn from issue for express abandonment. See 37 CFR 1.313(c)(3). The above-identified application is expressly abandoned in favor of a continuing application filed September 14, 2005.

Telephone inquiries should be directed to the undersigned at (571) 272-3208.

This matter is being referred to Files Repository.

Karen Creasy

Karen Creasy
Petitions Examiner
Office of Petitions
Office of the Deputy Commissioner
for Patent Examination Policy

UNITED STATES PATENT AND TRADEMARK OFFICE

JUN - 8 2005

Commissioner for Patents
United States Patent and Trademark Office
P.O. Box 1450
Alexandria, VA 22313-1450
www.uspto.gov

COGNIS CORPORATION
PATENT DEPARTMENT
300 BROOKSIDE AVENUE
AMBLER PA 19002

In re Application of	:
Stephen Heck et al	:
Serial No.: 09/874,899	: PETITION DECISION
Filed: June 5, 2001	:
Attorney Docket No.: H3193A	:

This is in response to the petition under 37 CFR 1.181, filed August 16, 2004, for withdrawal of abandonment of the above identified application. The delay in acting on this petition is regretted.

A review of the file history shows that the examiner mailed an Office action to applicants on November 21, 2003, setting a three month shortened statutory period for reply and reopening prosecution following filing of an Appeal Brief. Applicants were given the option of replying under 37 CFR 1.111 or requesting reinstatement of the Appeal with accompanying Appeal Brief. Applicants filed a request for reinstatement of the Appeal and an Appeal Brief on May 21, 2004, accompanied by a three month extension of time. The examiner mailed a Notice of Abandonment to applicants on June 3, 2004. In view of the above facts the Notice of Abandonment was mailed in error and is withdrawn and the application is restored to pending status with the mailing of this decision

The petition is **GRANTED**.

The application will be forwarded to the examiner for further action.

Applicants' terminal disclaimer filed with the petition is deemed unnecessary in view of the Office error and is dismissed. The fee of $110.00 will be credited to applicants' Deposit Account, 50-1177, as directed.

Should there be any questions about this decision please contact William R. Dixon, Jr., by letter addressed to Director, TC 1600, at the address listed above, or by telephone at 571-272-0519 or by facsimile sent to the general Office facsimile number 571-273-8300.

Bruce M. Kisliuk
Director, Technology Center 1600

UNITED STATES PATENT AND TRADEMARK OFFICE

Commissioner for Patents
United States Patent and Trademark Office
P.O. Box 1450
Alexandria, VA 22313-1450
www.uspto.gov

EDWARDS ANGELL PALMER & DODGE LLP
P.O. BOX 55874
BOSTON MA 02205

COPY MAILED

AUG 07 2008

OFFICE OF PETITIONS

In re Application of :
Weidanz et al. :
Application No. 09/874,907 :
Filed: June 5, 2001 :
Attorney Docket No. 49890(48340) :

ON PETITION

This is a decision on the petition under the unintentional provisions of 37 CFR 1.137(b), filed March 19, 2008, to revive the above-identified application.

The petition is **GRANTED**.

The application became abandoned for failure to timely file a reply within the meaning of 37 CFR 1.113 to the final Office action of July 10, 2007. The proposed reply required for consideration of a petition to revive must be a Notice of Appeal (and appeal fee required by 37 CFR 41.20(b)(2), an amendment that *prima facie* places the application in condition for allowance, a Request for Continued Examination and submission (37 CFR 1.114), or the filing of a continuing application under 37 CFR 1.53(b). See MPEP 711.03(c)(III)(A)(2). No extensions of time pursuant to the provisions of 37 CFR 1.136(a) were obtained. Accordingly, the date of abandonment of this application is October 11, 2007.

The petition satisfies the requirements of 37 CFR 1.137(b) in that petitioner has supplied (1) the reply in the form of a Request for Continued Examination (RCE) and fee of $405.00, and the submission required by 37 CFR 1.114; (2) the petition fee of $770.00; and (3) a proper statement of unintentional delay.

An extension of time under 37 CFR 1.136 must be filed prior to the expiration of the maximum extendable period for reply. *See* In re Application of S., 8 USPQ2d 1630, 1631 (Comm'r Pats. 1988). Since the $525.00 extension of time fee submitted with the petition on March 19, 2008 was subsequent to the maximum extendable period for reply. Deposit account 04-1105 will be refunded the $525.00.

Telephone inquiries concerning this decision should be directed to the undersigned at (571) 272-3215.

This application is being referred to Technology Center AU 1644 for processing of the RCE and for appropriate action by the Examiner in the normal course of business on the amendment submitted in accordance with 37 CFR 1.114.

Charlema Grant

Charlema Grant
Petitions Attorney
Office of Petitions

UNITED STATES PATENT AND TRADEMARK OFFICE

Commissioner for Patents
United States Patent and Trademark Office
Washington, D.C. 20231
www.uspto.gov

Paper No. 7

FULBRIGHT & JAWORSKI LLP
R ROSS VIGUET
2200 ROSS AVENUE, SUITE 2800
DALLAS TEXAS 75201

COPY MAILED

JUL 0 8 2002

OFFICE OF PETITIONS

In re Application of Piu B. Wong et al Application No. 09/874,932 Filed: June 5, 2001 Attorney Docket No. 47586/P062US/10026079	DECISION GRANTING PETITION UNDER 37 CFR 1.137(f)

This is a decision on the petition, filed March 1, 2002 and supplemented on June 17, 2002, to revive the instant nonprovisional application under the unintentional provisions of 37 CFR 1.137(f).

The petition is **GRANTED**.

Petitioner states that the instant nonprovisional application is the subject of an application filed in a foreign country on July 13, 2001. However, the U.S. Patent and Trademark Office was unintentionally not notified of this filing within 45 days subsequent to the filing of the subject application in a foreign country.

In view of the above, this application became abandoned pursuant to 35 U.S.C. § 122(b)(2)(B)(iii) and 37 CFR 1.213(c) for failure to timely notify the Office of the filing of an application in a foreign country, or under a multilateral international agreement, that requires publication of applications 18 months after filing.

A petition under 37 CFR 1.137(f) must be accompanied by:

(1) the reply which is met by the notification of such filing in a foreign country or under a multinational treaty;

(2) the petition fee as set forth in 37 CFR 1.17(m); and

(3) a statement that the entire delay in filing the required reply from the due date of the reply until the filing of a grantable petition was unintentional.

The instant petition has been found to be in compliance with 37 CFR 1.137(f). Accordingly, the failure to timely notify the Office of a foreign or international filing within 45 days after the date of filing of such foreign or international application as provided by 35 U.S.C. § 122(b)(2)(B)(iii) and 37 CFR 1.213(c) is accepted as having been unintentionally delayed.

The previous Request and Certification under 35 U.S.C. § 122(b)(2)(B)(i) has been rescinded. A Corrected Filing Receipt which sets forth the projected publication date of October 17, 2002 accompanies this decision on petition.

Any inquiries concerning this decision may be directed to the undersigned at (703) 305-8680.

This application is being forwarded to Technology Center Art Unit 2665 for examination in due course.

Frances Hicks
Petitions Examiner
Office of Petitions
Office of the Deputy Commissioner
for Patent Examination Policy

ATTACHMENT: Corrected Filing Receipt

UNITED STATES PATENT AND TRADEMARK OFFICE

Commissioner for Patents
United States Patent and Trademark Office
P. O. Box 1450
Alexandria, VA 22313-1450
www.uspto.gov

Paper No. 13

KRISTIN C. CASTLE
SIERRA PATENT GROUP
P O BOX 6149
STATELINE, NV 89449

COPY MAILED
MAY 23 2003
OFFICE OF PETITIONS

In re Application of Bruce M. Ruana Application No. 09/874,940 Filed: June 4, 2001 Attorney Docket No. RUANA-001	DECISION GRANTING PETITION UNDER 37 CFR 1.137(f)

This is a decision on the petition, filed May 12, 2003, to revive the instant nonprovisional application under the unintentional provisions of 37 CFR 1.137(f).

The petition is **GRANTED**.

Petitioner states that the instant nonprovisional application is the subject of an application filed in a foreign country on May 23, 2002. However, the U.S. Patent and Trademark Office was unintentionally not notified of this filing within 45 days subsequent to the filing of the subject application in a foreign country.

In view of the above, this application became abandoned pursuant to 35 U.S.C. § 122(b)(2)(B)(iii) and 37 CFR 1.213(c) for failure to timely notify the Office of the filing of an application in a foreign country, or under a multilateral international agreement, that requires publication of applications 18 months after filing.

A petition under 37 CFR 1.137(f) must be accompanied by:

(1) the reply which is met by the notification of such filing in a foreign country or under a multinational treaty;

(2) the petition fee as set forth in 37 CFR 1.17(m); and

(3) a statement that the entire delay in filing the

required reply from the due date of the reply until the filing of a grantable petition was unintentional.

The instant petition has been found to be in compliance with 37 CFR 1.137(f). Accordingly, the failure to timely notify the Office of a foreign or international filing within 45 days after the date of filing of such foreign or international application as provided by 35 U.S.C. § 122(b)(2)(B)(iii) and 37 CFR 1.213(c) is accepted as having been unintentionally delayed.

The previous Request and Certification under 35 U.S.C. § 122(b)(2)(B)(i) has been rescinded. A Notice Regarding Rescission of Nonpublication Request which sets forth the projected publication date of August 28, 2003 has been mailed under separate cover.

Any inquiries concerning this decision may be directed to the undersigned at (703) 305-8680.

This application is being forwarded to Technology Center Art Unit 3671 to await a reply to the nonfinal Office action mailed March 3, 2003. Failure to timely reply will again result in the abandonment of the application.

Frances Hicks

Frances Hicks
Petitions Examiner
Office of Petitions
Office of the Deputy Commissioner
for Patent Examination Policy

UNITED STATES PATENT AND TRADEMARK OFFICE

Commissioner for Patents
United States Patent and Trademark Office
P.O. Box 1450
Alexandria, VA 22313-1450
www.uspto.gov

Rebecca Goldman Rudich
McKenna, Long & Aldridge, LLP
1900 K Street, NW
Washington, DC 20006

COPY MAILED
APR 27 2006
OFFICE OF PETITIONS

In re Application of:
Ju Chun YEO, et al.
Application No.: 09/874,960
Filed: June 7, 2001
Atty's Docket No.: 8734.002.00

DECISION ON PETITION UNDER
37 CFR 1.137(b)

This is a decision on the petition for revival of the above-entitled application under 37 CFR 1.137(b) filed December 12, 2005.

The petition is **GRANTED**.

The above-identified application became abandoned for failure to submit the issue and publication fees in a timely manner in reply to the Notice Of Allowance mailed April 4, 2005, which set a statutory period for reply of three (3) months. Accordingly, the above-identified application became abandoned at midnight on July 5, 2005.

On December 12, 2005, applicant filed the petition for revival under 37 CFR 1.137(b) considered herein. The petition satisfies the conditions for revival pursuant to the provisions of 37 CFR 1.137(b) in that it includes: (1) the petition fee; (2) the required statement of unintentional delay; and (3) the required reply in the form of payment of the issue and publication fees. Accordingly, the issue and publication fee payments are accepted as having been unintentionally delayed.

The application is being referred to the Office Of Publications.

Telephone inquiries concerning this decision should be directed to the undersigned.

Derek A. Putonen
Attorney Advisor
(571) 272-3294

UNITED STATES PATENT AND TRADEMARK OFFICE

UNDER SECRETARY OF COMMERCE FOR INTELLECTUAL PROPERTY AND
DIRECTOR OF THE UNITED STATES PATENT AND TRADEMARK OFFICE
WASHINGTON, DC 20231
www.uspto.gov

MAILED

MAR 21 2003

DIRECTOR'S OFFICE
TECHNOLOGY CENTER 3600

Finnegan, Henderson, Farabow, Garrett & Dunner, LLP
1300 I Street, NW
Washington, DC 20005-3315

In re application of
Kimberly Patrick Farrow et al.
Application No. 09/875,053 :
Filed: June 7, 2001 :
For: EMBEDDED PRODUCT OFFERING WITH REAL-TIME PRICING AND AVAILABILITY :

DECISION ON REQUEST FOR WITHDRAWAL OF ATTORNEY

This is a decision on the request filed on December 2, 2002, under 37 CFR 1.36 and MPEP 402.06, requesting permission to withdraw as the attorney of record in the above-identified application.

The request is **NOT APPROVED**.

Under 37 CFR 1.36 an attorney may withdraw only upon application to and approval by the Commissioner. It should be noted that a withdrawal is effective when approved, not when filed. Besides giving due notice to his or her client and delivering to the client all papers and property to which the client is entitled as specified under 37 CFR 10.40, approval of such a request requires that the following conditions be met:

A) Each attorney of record must sign the notice of withdrawal, or the notice must contain a clear indication of one attorney signing on behalf of another, because the Office does not recognize law firms;

B) A proper reason for the withdrawal as enumerated in 37 CFR 10.40(b) or subsection (1)-(6) of 37 CFR 10.40(c) must be provided; and

C) If withdrawal is requested in accordance with 37 CFR 10.40(c) above, there must be at least 30 days between approval of the withdrawal and the later of the expiration date of a time period for reply or the expiration date of the period which can be obtained by a petition and fee for extension of time under 37 CFR 1.136(a).

The request to withdraw as attorney is not accepted in the above-identified application because the request lacks conditions A) and B) above.

As to condition A), the attorney signing the request does not have power of attorney in this application. Furthermore, in the original declaration, Debbie Segers of Sabre, Inc. was also given power in this application and the request fails to list this attorney. If only the attorneys of Finnegan, Henderson, Farabow, Garrett & Dunner listed in the original declaration are to have power withdrawn and Debbie Segers is intended to remain having power of attorney for this case, this needs to be made clear in any supplemental request; otherwise the above-noted attorney would need to be added to the request.

As to condition B), a proper reason for withdrawal as enumerated in 37 CFR 10.40(b) or subsection (1)-(6) of 37 CFR 10.40(c) must be provided.

Randolph A. Reese
Special Programs Examiner
Patent Technology Center 3600
(703) 308-2121
(703) 605-0586 (facsimile)

RAR/tpl: 3/19/03

UNITED STATES PATENT AND TRADEMARK OFFICE

COMMISSIONER FOR PATENTS
UNITED STATES PATENT AND TRADEMARK OFFICE
P.O. BOX 1450
ALEXANDRIA, VA 22313-1450
www.uspto.gov

JUL 29 2004

Paper No. 13

In re Application of
Warren M. Farnworth *et al*
Application No. 09/875,063
Filed: June 6; 2001
Attorney Docket No. 4245US(98-0288)

: DECISION ON PETITION

This is a decision on the petition filed on July 19, 2004 by which petitioners request withdrawal of the examiner's holding that this application stands abandoned for failure to file a proper and timely reply to the final Office action dated October 8, 2003. The petition is considered pursuant to 37 CFR 1.181, and no fee is required.

The petition is granted.

Petitioners allege that the application is not abandoned because a timely and reply to the Office letter in question was actually filed November 24, 2003. Petitioners have supported this allegation by furnishing a copy of the reply, which is a 37 CFR 1.114 Request for Continued Examination (RCE) and a copy of a filing receipt for the reply which shows that the reply was in fact received in the Office on November 24, 2003, a date within the period set for filing a reply to the Office letter in question. Therefore, it is clear that this application is not abandoned. Office financial records show that the fee for the RCE was received and processed.

Accordingly, the Notice of Abandonment is hereby vacated, the holding of abandonment is withdrawn, and the application is restored to pending status. The application is being forwarded to the Head Supervisory Applications Examiner for entry of the RCE filed on November 24, 2003. Thereafter, the application will be forwarded to the examiner for appropriate action.

PETITION GRANTED.

E. Rollins-Cross, Director
Technology Center 3700

Trask Britt
P.O. Box 2550
Salt Lake City, UT 84110

UNITED STATES PATENT AND TRADEMARK OFFICE

COMMISSIONER FOR PATENTS
UNITED STATES PATENT AND TRADEMARK OFFICE
P.O. BOX 1450
ALEXANDRIA, VA 22313-1450
WWW.USPTO.GOV

Paper No. None

TRASK BRITT
P.O. BOX 2550
SALT LAKE CITY UT 84110

COPY MAILED
SEP 0 6 2006
OFFICE OF PETITIONS

In re Application of	:	
Warren M. Farnworth et al.	:	
Application No. 09/875,063	:	DECISION ON PETITION
Filed: June 6, 2001	:	UNDER 37 C.F.R. §1.181
Attorney Docket No.: 4245US	:	
(98-0288)	:	
Title: GROUP ENCAPSULATED	:	
DICING CHUCK	:	

This is a decision on the petition filed July 18, 2006, pursuant to 37 C.F.R. §1.181, requesting that the holding of abandonment in the above-identified application be withdrawn.

The above-identified application became abandoned for failure to reply in a timely manner to the non-final Office action, mailed November 14, 2005, which set a shortened statutory period for reply of three months. No response was received, and no extensions of time under the provisions of 37 C.F.R. §1.136(a) were requested. Accordingly, the above-identified application became abandoned on February 15, 2006. A notice of abandonment was mailed on July 5, 2006.

With the present petition, Petitioner has asserted that a response was submitted on February 14, 2006, and has submitted a postcard receipt which contains a date stamp from the Office of Initial Patent Examination dated February 16, 2006.

Petitioner has submitted a copy of this submission, and it is noted that it contains a certificate of mailing dated February 14, 2006.

The electronic file has been reviewed, and a copy of this response has been located in the same.

Petitioner has requested that the holding of abandonment in the above-identified application be withdrawn. It is clear that a response was timely submitted on February 14, 2006. Considering the facts and circumstances of the delay at issue, as set forth on petition, it is concluded that Petitioner has met his burden of establishing that a submission was timely submitted.

Accordingly, the petition under 37 C.F.R. §1.181(a) is **GRANTED**. The holding of abandonment is **WITHDRAWN**

The Technology Center will be notified of this decision. The Technology Center's support staff will notify the Examiner of this decision, so that the amendment which was received on February 16, 2006can be processed.

The Power of Attorney has been entered and made of record.

Telephone inquiries regarding *this decision* should be directed to the undersigned at (571) 272-3225[1]. All other inquiries concerning examination procedures or status of the application should be directed to the Technology Center.

Paul Shanoski
Senior Attorney
Office of Petitions
United States Patent and Trademark Office

1 Petitioner will note that all practice before the Office should be in writing, and the action of the Office will be based exclusively on the written record in the Office. See 37 C.F.R. §1.2. As such, Petitioner is reminded that no telephone discussion may be controlling or considered authority for Petitioner's further action(s).

UNITED STATES PATENT AND TRADEMARK OFFICE

Commissioner for Patents
United States Patent and Trademark Office
P.O. Box 1450
Alexandria, VA 22313-1450
www.uspto.go

BERNHARD KRETEN
WEINTRAUB GENSHLEA CHEDIAK SPROULE
400 CAPITOL MALL, 11TH FLOOR
SACRAMENTO, CA 95814

Paper No. 10

MAILED

NOV 08 2005

Director's Office
Group 3700

In re Application of
SCALESE ET AL.
Appl No.: 09/875,065
Filed: June 05, 2001
For: MICROWAVE MOISTURE ANALYZER: APPARATUS AND METHOD
Attorney Docket Number: 31027-pa

DECISION GRANTING PETITION
37 CFR 1.181

This is a decision on the petition filed March 11, 2003 requesting that the office action mailed November 29, 2002 be remailed. The petition is considered pursuant to 37 CFR 1.181 and no fee is required for this petition.

The petition is granted.

A review of the record indicates that a change of address was filed on April 2, 2002. However, the change of address was not entered into the file until after the mailing of the office action of November 29, 2002. Accordingly, it appears that petitioner is entitled to have the Office action of November 29, 2002 remailed. However, petitioner has obtained the copy of the office action and subsequently filed a response on June 2, 2003. Therefore, physical remailing of the office action is not necessary and the amendment filed June 2, 2003 will be accepted as timely filed.

The application will be forwarded to the Technical Support Staff to have an entry in the PALM system made to show the office action of November 29, 2002 has been remailed prior to the filing of the amendment of June 2, 2003. The amendment of June 2, 2003 will be entered into the file and the application will then be forwarded to the examiner for action on the amendment.

Richard A. Bertsch

Richard A. Bertsch, Director
Technology Center 3700

UNITED STATES PATENT AND TRADEMARK OFFICE

COMMISSIONER FOR PATENT
UNITED STATES PATENT AND TRADEMARK OFFIC
WASHINGTON, D.C. 20231
www.uspto.go

COZEN O'CONNER, P.C.
1900 MARKET STREET
PHILADELPHIA PA 19103-3508

COPY MAILED

APR 1 0 2003

OFFICE OF PETITIONS

Applicant: Chen et al.
Appl. No.: 09/875,076
Filing Date: June 6, 2001
Title: HUMAN ORPHAN G PROTEIN-COUPLED RECEPTORS
Attorney Docket No.: 11.US7REG (AREN-0239)
Pub. No.: US 2003/00017528 A1
Pub. Date: January 23, 2003

This is in response to the request for correction of patent application publication under 37 CFR 1.221(b), which was received on March 21, 2003.

The request is DISMISSED.

The instant request is that the application be republished because Figs. 2A, 2B, 3, 4 and 5 are not readable in the published application and are believed to be material to understanding results of the dot-blot and RT-PCT analyses reported in the patent application.

A patent application publication is based on the application papers as originally filed, according to 37 CFR 1.215(a), which says the following, in part:

> (a) . . . The patent application publication will be based upon the application papers deposited on the filing date of the application, as well as the executed oath or declaration submitted to complete the application . . . The patent application publication will not include any amendments, including preliminary amendments, unless applicant supplies a copy of the application containing the amendment pursuant to paragraph (c) of this section.

§ 1.215(c) says the following:

> (c) At applicant's option, the patent application publication will be based upon the copy of the application (specification, drawings, and oath or declaration) as amended during examination, provided that applicant supplies such a copy in compliance with the Office electronic filing system requirements within one month of the actual filing date of the application or fourteen months of the earliest filing date for which is sought under title 35, United States Code, whichever is later.

37 CFR 1.221(b) is applicable "only when the Office makes a material mistake which is apparent from Office records." A material mistake must affect the public's ability to appreciate the technical disclosure of the patent application publication, to determine the scope of the patent application publication, or to determine the scope of the provisional rights that an applicant may seek to enforce upon issuance of a patent.[1] The instant request does not identify a material mistake in the publication made by the Office:

The errors in Figs. 2A, 2B, 3, 4 and 5 in the request will not be corrected as the Office correctly published the application including the drawings in accordance with § 1.215(a), see the figures on

---

[1] Changes to Implement Eighteen-Month Publication of Patent Applications, 65 FR 57023, 57038 (Sept. 20, 2000), 1239 Off. Gaz. Pat. Office Notices 63, 75 (Oct. 10, 2000) (final rule).

pages 3/4 and 4/4 respectively, which depict the Figures as shown in the published application.

If applicant desires to have better drawings included in a patent application publication than the drawings which were submitted with the application on filing, applicant may supply a copy of the application in compliance with § 1.215(c) or applicant may submit replacement drawings on paper within the later of one month from the filing date of the application or fourteen months from the earliest filing date for which a benefit is sought under title 35, United States Code.[2] The replacement paper drawings must be filed in an envelope addressed to Mail Stop PGPUB DRAWINGS, Commissioner for Patents, P.O. Box 1450, Alexandria, VA 22313-1450,[3] with a petition under 37 CFR 1.182 requesting entry of the drawings, and the petition fee set forth in 37 CFR 1.17(h), in the time period set forth above. Replacement drawings that are received later than this date may be included in the patent application publication, where practicable, if the USPTO has not started the patent application publication process.

The applicant is advised that a "request for republication of an application previously published" may be filed under 37 CFR 1.221(a). Such a request for republication "must include a copy of the application in compliance with the Office's electronic filing system requirements and be accompanied by the publication fee set forth in § 1.18(d) and the processing fee set forth in § 1.17(i)." If the request for republication does not comply with the electronic filing system requirements, the republication will not take place and the publication fee set forth in § 1.18(d) will be refunded. The processing fee will be retained.

Any request for republication under 37 CFR 1.221(b), should be submitted via the EFS system and questions should be addressed as follows:

By mail to: Mail Stop PGPUB
Commissioner for Patents
P.O. Box 1450
Alexandria, VA 22313-1450

By facsimile: 703-305-8568

The application is being forwarded to Technology Center 1600 to await further examination in due course.

Inquires concerning this communication should be directed to Mark Polutta at (703) 308-8122 (voice) or (703) 746-3465 (facsimile).

Mark O. Polutta
Office of Patent Legal Administration
Office of the Deputy Commissioner
for Patent Examination Policy

---

[2] Drawings in Patent Application Publications and Patents, 1242 Off. Gaz. Pat. Office Notices 114 (Jan.16, 2001).

[3] Correspondence with the United States Patent and Trademark Office, 68 Fed. Reg. 14332 (March 25, 2003).

UNITED STATES PATENT AND TRADEMARK OFFICE

UNITED STATES DEPARTMENT OF COMMERCE
United States Patent and Trademark Office
Address: COMMISSIONER FOR PATENTS
P.O. Box 1450
Alexandria, Virginia 22313-1450
www.uspto.gov

DICKSTEIN SHAPIRO LLP
1825 EYE STREET NW
Washington, DC 20006-5403

Mail Date: 04/21/2010

Applicant	: Carlo Dall'Aglio	: DECISION ON REQUEST FOR
Patent Number	: 7607239	: RECALCULATION of PATENT
Issue Date	: 10/27/2009	: TERM ADJUSTMENT IN VIEW
Appliction No	: 09/875,137	: OF WYETH AND NOTICE OF INTENT TO
Filed	: 06/07/2001	: ISSUE CERTIFICATE OF CORRECTION
		:

The Request for Recalculation is **GRANTED** to the extent indicated.

The patent term adjustment has been determined to be **2484** days. The USPTO will *sua sponte* issue a certificate of correction reflecting the amount of PTA days determined by the recalculation.

Prior to the issuance of the certificate of correction, the USPTO will afford patentee an opportunity to be heard and request reconsideration. Accordingly, patentee has **one month or thirty (30) days**, whichever is longer, to file a request for reconsideration of this patent term adjustment calculation. See 35 U.S.C. 154(b)(3)(B)(ii) and 37 CFR 1.322(a)(4). No extensions of time will be granted under 37 CFR 1.136.

Patentee should use document code PET.OP if electronically filing a request for reconsideration of this patent term adjustment calculation. The patentee must also include the information required by 37 CFR 1.705(b)(2) and the fee required by 37 CFR 1.18(e). If patentee does not file a timely request for reconsideration of this patent term adjustment calculation including the information required by 37 CFR 1.705(b)(2) and the fee required by 37 CFR 1.18(e), the USPTO will issue a certificate of correction reflecting the PTA determination noted above.

Patentee should be aware that in order to preserve the right to review in the United States District Court for the District of Columbia of the USPTO patent term adjustment determination, patentee must ensure that he or she also take the steps required under 35 U.S.C. 154(b)(4)(A) in a timely manner. Nothing in the request for recalculation should be construed as providing an alternative time frame for commencing a civil action under 35 U.S.C. 154(b)(4)(A).

Any questions concerning this decision should be directed to the Office of Patent Legal Administration at 571-272-7702.

UNITED STATES PATENT AND TRADEMARK OFFICE

Commissioner for Patents
United States Patent and Trademark Office
P.O. Box 1450
Alexandria, VA 22313-1450
www.uspto.gov

Paper No. 13

CHRISTOPHER S. MARCHESE
FISH & RICHARDSON P.C.
4350 LA JOLLA VILLAGE DRIVE,
SUITE 500
SAN DIEGO, CA 92122

COPY MAILED

JUN 1 8 2004

OFFICE OF PETITIONS

In re Application of	:
Neal A. Brown et al	:
Application No. 09/875,209	: DECISION ON PETITION
Filed: June 4, 2001	: UNDER 37 CFR 1.78(a)(3)
Attorney Docket No. 10431-005001	:

This is a decision on the petition under 37 CFR 1.78(a)(3), filed November 17, 2003, to accept an unintentionally delayed claim under 35 U.S.C. § 120 for the benefit of priority to the prior-filed nonprovisional applications set forth in the amendment filed concurrently with the instant petition.

The petition is **GRANTED**.

A petition for acceptance of a claim for late priority under 37 CFR 1.78(a)(3) is only applicable to those applications filed on or after November 29, 2000. Further, the petition is appropriate only after the expiration of the period specified in 37 CFR 1.78(a)(2)(ii). In addition, the petition under 37 CFR 1.78(a)(3) must be accompanied by:

> **(1)** the reference required by 35 U.S.C. § 120 and 37 CFR 1.78(a)(2)(i) of the prior-filed application, unless previously submitted;[1]
> **(2)** the surcharge set forth in § 1.17(t); and
> **(3)** a statement that the entire delay between the date the claim was due under 37 CFR 1.78(a)(2)(ii) and the date the claim was filed was unintentional. The Commissioner may require additional information where there is a question whether the delay was unintentional.

---

[1] Any nonprovisional application or international application designating the United States of America claiming the benefit of one or more prior-filed copending applications or international applications designating the United States of America must contain or be amended to contain a reference (amendment to the first line of the specification following the title or in an application data sheet (ADS) to each such prior-filed application, identifying it by application number (consisting of the series code and serial number) or international application number and international filing date filing date and indicating the relationship of the applications. Cross references to other related applications may be made when appropriate (*see* § 1.14).

The instant pending application was filed on June 4, 2001, and was pending at the time of filing of the instant petition. A reference to the prior-filed nonprovisional applications has been included in an amendment to the first sentence of the specification following the title, as required by 37 CFR 1.78(a)(2)(iii).

The instant nonprovisional application was filed after November 29, 2000, and the claim herein for the benefit of priority to the prior-filed nonprovisional applications is submitted after expiration of the period specified in 37 CFR 1.78(a)(2)(ii). Also, the reference to the prior-filed nonprovisional applications was submitted during the pendency of the instant nonprovisional application, for which the claim for benefit of priority is sought. *See* 35 U.S.C. § 120. Accordingly, having found that the instant petition for acceptance of an unintentionally delayed claim for the benefit of priority under 35 U.S.C. § 120 to the prior-filed nonprovisional applications satisfies the conditions of 37 CFR 1.78(a)(3), the petition is granted.

The granting of the petition to accept the delayed benefit claim to the prior-filed applications under 37 CFR 1.78(a)(3) should not be construed as meaning that the instant application is entitled to the benefit of the prior-filed applications. In order for the instant application to be entitled to the benefit of the prior-filed applications, all other requirements under 35 U.S.C. § 120 and 37 CFR 1.78(a)(1) and (a)(2) must be met. Similarly, the fact that the corrected Filing Receipt accompanying this decision on petition includes the prior-filed applications should not be construed as meaning that applicant is entitled to the claim for benefit of priority to the prior-filed applications noted thereon. Accordingly, the examiner will, in due course, consider this benefit claim and determine whether the instant application is entitled to the benefit of the earlier filing date.

Since petitioner did not reference provisional Application No. 60/209,126, filed June 2, 2000, in the instant amendment, it is presumed that petitioner did not want the reference included in the related applications.

A corrected Filing Receipt, which includes the priority claim to the prior-filed nonprovisional applications, accompanies this decision on petition.

The file does not indicate a change of address has been submitted, although the address given on the petition differs from the address of record. If appropriate, a change of address should be filed in accordance with MPEP 601.03. A courtesy copy of this decision is being mailed to the address given on the petition; however, the Office will mail all future correspondence solely to the address of record.

Any inquiries concerning this decision may be directed to Karen Creasy at (703) 305-8859.

This application is being forwarded to Technology Center Art Unit 3673 for consideration by the examiner of applicant's entitlement to claim benefit of priority under 35 U.S.C. § 120 to the prior-filed nonprovisional applications.

Karen Creasy

Karen Creasy
Petitions Examiner
Office of Petitions
Office of the Deputy Commissioner
for Patent Examination Policy

ATTACHMENT: Corrected Filing Receipt

cc:
FISH & RICHARDSON P.C.
12390 EL CAMINO REAL
SAN DIEGO, CA 92130

UNITED STATES PATENT AND TRADEMARK OFFICE

COMMISSIONER FOR PATENTS
UNITED STATES PATENT AND TRADEMARK OFFICE
P.O. BOX 1450
ALEXANDRIA, VA 22313-1450
www.uspto.gov

Paper No. 16

Weiss, Moy & Harris, P.C.
Attorneys and Counselors
4204 N. Brown Avenue
Scottsdale, AZ 85251-3914

COPY MAILED
JUN 2 8 2004
OFFICE OF PETITIONS

In re Application of	:	
Lowell Martinson	:	
Application No. 09/875,212	:	ON PETITION
Filed: June 7, 2001	:	
Attorney Docket No. 3755P2332	:	

This is a decision on the petition under 37 CFR 1.137(b), filed February 3, 2004, to revive the above-identified application.

The petition is **GRANTED**.

Telephone inquiries concerning this decision should be directed to the undersigned at (703) 306-3475.

The application file is being forwarded to Technology Center 2800.

Marianne E. Morgan
Petitions Examiner
Office of Petitions
Office of the Deputy Commissioner
for Patent Examination Policy

UNITED STATES PATENT AND TRADEMARK OFFICE

COMMISSIONER FOR PATENTS
UNITED STATES PATENT AND TRADEMARK OFFICE
WASHINGTON, D.C. 20231
www.uspto.gov

Paper No. 10

ELLEN M. KLANN
WOODCOCK WASHBURN KURTZ
MACKIEWICZ & NORRIS LLP
ONE LIBERTY PLACE - 46TH FLOOR
PHILADELPHIA, PA 19103

COPY MAILED

MAY 06 2002

OFFICE OF PETITIONS

In re Application of
Diijeet Singh Athwal, et al
Application No. 09/875,221
Filed: June 6, 2001
Attorney Docket No. CARP-0089

DECISION GRANTING PETITION

This is a decision on the petition filed February 4, 2002, under 37 CFR 1.10(c), requesting that the above-identified application be accorded a filing date of June 6, 2001, instead of the presently accorded date of October 18, 2001.

Petitioner alleges that the application was deposited in "Express Mail" service with the U. S. Postal Service, on June 6, 2001. In support, petitioners provide a copy of the Express Mail label, receipt no. EL827224012US. The same Express Mail receipt number was referred to in the original transmittal letter found in the file.

The Office considers the date the paper or fee is shown to have been deposited as "Express Mail" to be the "Date In" on the Express Mail label, MPEP 513. That is the date that verifies that the package was actually mailed. The evidence is convincing that the application was deposited as "Express Mail" with the US Postal Service on July 24, 2001.

The petition is granted.

The application is being returned to Initial Patent Examination Division for correction of the filing date to **June 6, 2001**.

Telephone inquires related to this decision should be directed to the undersigned at (703) 305-9220. Telephone inquiries related to OIPE processing should be directed to their hotline at (703) 308-1202.

Sherry D. Brinkley
Petitions Examiner
Office of Petitions
Office of the Deputy Commissioner
for Patent Examination Policy

UNITED STATES PATENT AND TRADEMARK OFFICE

Commissioner for Patents
United States Patent and Trademark Office
P.O. Box 1450
Alexandria, VA 22313-1450
www.uspto.gov

Paper No. 23

COZEN O'CONNOR, P.C.
1900 MARKET STREET
PHILADELPHIA, PA 19103-3508

COPY MAILED

SEP 07 2004

OFFICE OF PETITIONS

In re Application Athwal et al. Application No. 09/875,221 Filed: June 6, 2001 Attorney Docket No. CARP-0089	DECISION ON APPLICATION FOR PATENT TERM ADJUSTMENT

This is a decision on the "APPLICATION FOR PATENT TERM ADJUSTMENT" filed August 6, 2003. Applicants request that the initial determination of patent term adjustment under 35 U.S.C. 154(b) be corrected from two hundred twenty-three (223) days to two hundred seventy-three (273) days.

The application for patent term adjustment is **DISMISSED**.

Applicants are given **thirty (30) days** from the mail date of this decision to respond to this decision. No extensions of time will be granted under § 1.136.

For the reasons set forth herein, the Office has updated the PAIR screen to reflect that the correct Patent Term Adjustment (PTA) determination at the time of the mailing of the Notice of Allowance is zero **(0)** days[1]. A copy of the updated PAIR screen, showing the correct determination, is enclosed.

On May 6, 2003, the Office mailed the Determination of Patent Term Adjustment under 35 U.S.C. 154(b) in the above-identified application. The Notice stated that the patent term adjustment (PTA) to date is 223 days. On August 6, 2003, applicants timely[2] submitted an application for patent term adjustment (with required fee), asserting that the correct number of days of PTA at the time of the mailing of the Notice of Allowance was two hundred seventy-three (273) days. Applicants assert entitlement to a patent term adjustment on the basis that the USPTO failed to mail the first Office action, the Notice of Allowance, within 14 months of the filing date of the application. Applicants dispute

---

[1] The zero days is determined to be a result of 273 days of administrative delay and 449 days of applicant delay.

[2] The Issue Fee payment was received in the Office on August 6, 2003.

there being any basis for reduction of the patent term adjustment.

Applicants specifically state that the patent issuing from the application is not subject to a terminal disclaimer and that there were no circumstances in the prosecution of the application which constituted failure to engage in reasonable efforts to conclude processing or examination.

The Office initially determined a patent term adjustment of two hundred twenty-three (223) days based on an adjustment for PTO delay of two hundred seventy-three (273) days pursuant to 35 U.S.C. 154(b)(1)(A)(i) reduced by applicants' delay of fifty (50) days pursuant to 35 U.S.C. 154(b)(2)(C)(ii) for failure to timely file a reply to the Notice to File Missing Parts of Application mailed July 18, 2001.

A review of the application file reveals that the applicants' response to the Notice to File Missing Parts of Application mailed July 18, 2001, is of record in the application with a date of receipt by the Office of October 18, 2001. However, this response was not complete. The Notice required applicants to submit a signed oath or declaration and a late surcharge under 37 CFR 1.18(e). In addition, applicants were to provide a substitute computer readable form (CRF) copy of the "Sequence Listing" and a statement. The declaration and late surcharge were accepted as complete and proper replies on October 18, 2001. However, the CRF was found to be unreadable.

The Office mailed a letter requesting a CRF in compliance on September 24, 2002. The CRF filed, in response, on October 24, 2002 was found to be technically good and entered. However, by letter mailed December 9, 2002, the examiner advised applicants that the sequence rule request response was incomplete. On January 9, 2003, applicants filed a response amending the application to correct the error.

Pursuant to 37 CFR 1.704(c)(7), applicants failed to engage in reasonable efforts to conclude prosecution of the application by submitting an incomplete reply to the request to comply with sequence rules set forth in the Notice to File Missing Parts of Application mailed July 18, 2001. 37 C.F.R. § 1.704(c)(7) provides that:

> Submission of a reply having an omission (§1.135(c)), in which case the period of adjustment set forth in § 1.703 shall be reduced by the number of days, if any, beginning on the day after the date the reply having an omission was filed and ending on the date that the reply or other paper correcting the omission was filed.

In the instant case, an initial reply was filed on October 18, 2001. However, by Notice mailed September 24, 2002, applicants were advised that the reply was not in compliance. On October 24, 2002, applicants filed another response. However, it was determined by the examiner not to be in compliance. Applicants finally submitted a reply correcting the omission on January 9, 2003. Accordingly, the period of adjustment is 449 days, the number of days in the period beginning on October 18, 2001 and ending on January 9, 2003.

In view thereof, the correct determination of patent term adjustment at the time of the mailing of the Notice of Allowance is zero (0) days. (273 days reduced by 449 days).

The Office acknowledges submission of the $200.00 fee set forth in 37 CFR 1.18(e). No additional fees are required.

The application is being forwarded to the Office of Initial Patent Examination for consideration of the request for corrected filing receipt filed July 28, 2003. Thereafter, the Office will forward the file to the Office of Patent Publication so that a patent can be issued.

Telephone inquiries specific to this decision should be directed to Nancy Johnson, Senior Petitions Attorney, at (703) 305-0309.

Karin Ferriter
Senior Legal Advisor
Office of Patent Legal Administration
Office of Deputy Commissioner
for Patent Examination Policy

Enclosure: Copy of Revised PAIR Screen

UNITED STATES PATENT AND TRADEMARK OFFICE

Commissioner for Patents
United States Patent and Trademark Office
P.O. Box 1450
Alexandria, VA 22313-1450
www.uspto.gov

Paper No.

COZEN O'CONNOR, P.C.
1900 MARKET STREET
PHILADELPHIA, PA 19103-3508

COPY MAILED

SEP 3 0 2005

OFFICE OF PETITIONS

In re Application
Athwal et al.
Application No. 09/875,221
Filed: June 6, 2001
Attorney Docket No. CARP-0089

DECISION ON REQUEST FOR RECONSIDERATION OF DECISION ON APPLICATION FOR PATENT TERM ADJUSTMENT

This is a decision on the "RESPONSE TO DECISION ON APPLICATION FOR PATENT TERM ADJUSTMENT" filed October 7, 2004. Applicants request reconsideration of the decision mailed September 7, 2004 Applicants maintain that the initial determination of patent term adjustment under 35 U.S.C. 154(b) be corrected from zero (0) days to two hundred seventy-three (273) days, plus at least an additional 10 months of term adjustment due to delay in issuance.

The request for reconsideration of decision on application for patent term adjustment is **GRANTED** to the extent indicated herein.

The Office has updated the PAIR screen to reflect that the correct Patent Term Adjustment (PTA) determination at the time of the mailing of the Notice of Allowance is two hundred seventy - three **(273)** days. A copy of the updated PAIR screen, showing the correct determination, is enclosed.

On May 6, 2003, the Office mailed the Determination of Patent Term Adjustment under 35 U.S.C. 154(b) in the above-identified application. The Notice stated that the patent term adjustment (PTA) to date is 223 days. On August 6, 2003, applicants timely submitted an application for patent term adjustment (with required fee), asserting that the correct number of days of PTA at the time of the mailing of the Notice of Allowance is two hundred seventy-three (273) days. This initial request by applicant presumably included an acknowledgment of entitlement to a patent term adjustment of 273 days on the basis that the USPTO failed to mail the first Office action, the Notice of Allowance, within 14 months of the filing date of the application[1].

---

[1] On request for reconsideration, applicants assert that the Decision incorrectly alleges that Applicants requested additional time on the USPTO's failure to mail the first Office Action or Notice of Allowance within 14 months of the filing date of the application. Whereas, the decision merely

Applicants only disputed the reduction of 50 days for applicant delay, associated with the delay in filing a response to the Notice to File Missing Parts of Application mailed July 18, 2001.

By decision mailed September 7, 2004, applicants were advised that the initial determination of patent term adjustment had been corrected to zero (0) days, including 273 days of Office delay and 449 days (not 50) of applicant delay. The applicant delay of 449 was entered pursuant to § 1.704(c)(7) for submitting an incomplete reply to the request to comply with sequence rules set forth in the Notice to File Missing Parts of Application mailed July 18, 2001. The entry of the 449 day period of reduction is at issue on instant request for reconsideration.

The application history has been carefully reviewed, and it has been determined that the entry of an additional period of reduction of 449 days was not warranted. A comparison of the Communications mailed by the Office and applicants' replies reveals that the relevant replies were neither non-compliant nor had an omission within the meaning of § 1.704(c)(7).

In view thereof, the correct determination of patent term adjustment at the time of the mailing of the Notice of Allowance is two hundred seventy-three (273) days.

The application is being forwarded to the Office of Patent Publication for issuance of the application. The revised patent term adjustment indicated on the patent will include any additional patent term earned for Office failure to issue the patent within four months after the date the issue fee was paid and all outstanding requirements were satisfied.

Telephone inquiries specific to this decision should be directed to Nancy Johnson, Senior Petitions Attorney, at (571) 272-3219.

Kery A. Fries

Kery A. Fries
Senior Legal Advisor
Office of Patent Legal Administration
Office of Deputy Commissioner
for Patent Examination Policy

Enclosure: Copy of REVISED PALM Screen

---

acknowledged applicants' agreement with the 273 entry. Otherwise, there would have been no basis for applicants to assert entitlement to 273 days of PTA.

SPE RESPONSE FOR CERTIFICATE OF CORRECTION

Paper No.: _____

DATE : December 20, 2006

TO SPE OF : ART UNIT 1646

SUBJECT : Request for Certificate of Correction for Appl. No.: 09/875221 patent No.: ~~6,988,982~~ 7,012,135

Please respond to this request for a certificate of correction within 7 days.

Please review the requested changes/corrections as shown in the **COCIN** document(s) in the IFW application image. No new matter should be introduced, nor should the scope or meaning of the claims be changed.

Please complete the response (see below) and forward the completed response to scanning using document code **COCX**.

Magdalene Talley

Certificates of Correction Branch

703-308-9390 ext. 116

Thank You For Your Assistance

The request for issuing the above-identified correction(s) is hereby:

Note your decision on the appropriate box.

- ☑ **Approved** — **All** changes apply.
- ☐ **Approved in Part** — Specify below which changes **do not** apply.
- ☐ **Denied** — State the reasons for denial below.

Comments: _____

Gary Benzion — **SPE**

1646 — **Art Unit**

Under the Paperwork Reduction Act of 1995, no persons are required to respond to a collection of information unless it displays valid OMB control number.

PETITION TO ACCEPT UNINTENTIONALLY DELAYED PAYMENT OF MAINTENANCE FEE IN AN EXPIRED PATENT (37 CFR 1.378(c))

Patent Number	Issue Date (YYYY-MM-DD)	Application Number	Filing Date (YYYY-MM-DD)	Docket Number (if applicable)
6456434	2002-09-24	09/875,230	2001-06-05	1571.011us1

CAUTION: Maintenance fee (and surcharge, if any) payment must correctly identify: (1) the patent number and (2) the application number of the actual U.S. application leading to issuance of that patent to ensure the fee(s) is/are associated with the correct patent. 37 CFR 1.366(c) and (d).

SMALL ENTITY
☒ Patentee claims, or has previously claimed, small entity status. See 37 CFR 1.27.

LOSS OF ENTITLEMENT TO SMALL ENTITY STATUS
☐ Patentee is no longer entitled to small entity status. See 37 CFR 1.27(g)

NOT Small Entity		Small Entity	
Fee	Code	Fee	Code
○ 3 ½ year	(1551)	◉ 3 ½ year	(2551)
○ 7 ½ year	(1552)	○ 7 ½ year	(2552)
○ 11 ½ year	(1553)	○ 11 ½ year	(2553)

SURCHARGE
The surcharge required by 37 CFR 1.20(i)(2) (Fee Code 1558) must be paid as a condition of accepting unintentionally delayed payment of the maintenance fee.

MAINTENANCE FEE (37 CFR 1.20(e)-(g))
The appropriate maintenance fee must be submitted with this petition.

STATEMENT
THE UNDERSIGNED CERTIFIES THAT THE DELAY IN PAYMENT OF THE MAINTENANCE FEE TO THIS PATENT WAS UNINTENTIONAL

PETITIONER(S) REQUEST THAT THE DELAYED PAYMENT OF THE MAINTENANCE FEE BE ACCEPTED AND THE PATENT REINSTATED

THIS PORTION MUST BE COMPLETED BY THE SIGNATORY OR SIGNATORIES

37 CFR 1.378(d) states: "Any petition under this section must be signed by an attorney or agent registered to practice before the Patent and Trademark Office, or by the patentee, the assignee, or other party in interest."

I certify, in accordance with 37 CFR 1.4(d)(4) that I am

◉ An attorney or agent registered to practice before the Patent and Trademark Office

○ A sole patentee

○ A joint patentee; I certify that I am authorized to sign this submission on behalf of all the other patentees.

○ A joint patentee; all of whom are signing this e-petition

○ The assignee of record of the entire interest

Patent Practitioner			
A signature of the applicant or representative is required in accordance with 37 CFR 1.33 and 10.18. Please see 37 CFR 1.4(d) for the form of the signature			
Signature	/joseph p. mehrle/	Date (YYYY-MM-DD)	2007-12-18
Name	Joseph P. Mehrle	Registration Number	56646

This collection of information is required by 37 CFR 1.378(c). The information is required to obtain or retain a benefit by the public which is to file (and by the USPTO to process) an application. Confidentiality is governed by 35 U.S.C. 122 and 37 CFR 1.11 and 1.14. This collection is estimated to take 1 hour to complete, including gathering, preparing, and submitting the completed application form to the USPTO. Time will vary depending upon the individual case. Any comments on the amount of time you require to complete this form and/ or suggestions for reducing this burden, should be sent to the Chief Information Officer, U.S. Patent and Trademark Office, U.S. Department of Commerce, P.O. Box 1450, Alexandria, VA 22313-1450. DO NOT SEND FEES OR COMPLETED FORMS TO THIS ADDRESS. **This form can only be used when in conjunction with EFS-Web. If this form is mailed to the USPTO, it may cause delays in reinstating the patent.**

Privacy Act Statement

The Privacy Act of 1974 (P.L. 93-579) requires that you be given certain information in connection with your submission of the attached form related to a patent application or patent. Accordingly, pursuant to the requirements of the Act, please be advised that: (1) the general authority for the collection of this information is 35 U.S.C. 2(b)(2); (2) furnishing of the information solicited is voluntary; and (3) the principal purpose for which the information is used by the U.S. Patent and Trademark Office is to process and/or examine your submission related to a patent application or patent. If you do not furnish the requested information, the U.S. Patent and Trademark Office may not be able to process and/or examine your submission, which may result in termination of proceedings or abandonment of the application or expiration of the patent.

The information provided by you in this form will be subject to the following routine uses:

1. The information on this form will be treated confidentially to the extent allowed under the Freedom of Information Act (5 U.S.C. 552) and the Privacy Act (5 U.S.C. 552a). Records from this system of records may be disclosed to the Department of Justice to determine whether the Freedom of Information Act requires disclosure of these record s.

2. A record from this system of records may be disclosed, as a routine use, in the course of presenting evidence to a court, magistrate, or administrative tribunal, including disclosures to opposing counsel in the course of settlement negotiations.

3. A record in this system of records may be disclosed, as a routine use, to a Member of Congress submitting a request involving an individual, to whom the record pertains, when the individual has requested assistance from the Member with respect to the subject matter of the record.

4. A record in this system of records may be disclosed, as a routine use, to a contractor of the Agency having need for the information in order to perform a contract. Recipients of information shall be required to comply with the requirements of the Privacy Act of 1974, as amended, pursuant to 5 U.S.C. 552a(m).

5. A record related to an International Application filed under the Patent Cooperation Treaty in this system of records may be disclosed, as a routine use, to the International Bureau of the World Intellectual Property Organization, pursuant to the Patent Cooperation Treaty.

6. A record in this system of records may be disclosed, as a routine use, to another federal agency for purposes of National Security review (35 U.S.C. 181) and for review pursuant to the Atomic Energy Act (42 U.S.C. 218(c)).

7. A record from this system of records may be disclosed, as a routine use, to the Administrator, General Services, or his/her designee, during an inspection of records conducted by GSA as part of that agency's responsibility to recommend improvements in records management practices and programs, under authority of 44 U.S.C. 2904 and 2906. Such disclosure shall be made in accordance with the GSA regulations governing inspection of records for this purpose, and any other relevant (i.e., GSA or Commerce) directive. Such disclosure shall not be used to make determinations about individuals.

8. A record from this system of records may be disclosed, as a routine use, to the public after either publication of the application pursuant to 35 U.S.C. 122(b) or issuance of a patent pursuant to 35 U.S.C. 151. Further, a record may be disclosed, subject to the limitations of 37 CFR 1.14, as a routine use, to the public if the record was filed in an application which became abandoned or in which the proceedings were terminated and which application is referenced by either a published application, an application open to public inspections or an issued patent.

9. A record from this system of records may be disclosed, as a routine use, to a Federal, State, or local law enforcement agency, if the USPTO becomes aware of a violation or potential violation of law or regulation.

UNITED STATES PATENT AND TRADEMARK OFFICE

Commissioner for Patents
United States Patent and Trademark Office
P.O. Box 1450
Alexandria, VA 22313-1450
www.uspto.gov

In re Patent No. 6456434
Issue Date: September 24,2002
Application No. 09875230
Filed: June 5,2001
Attorney Docket No. 1572.002US1

:

:DECISION GRANTING PETITION
:UNDER 37 CFR 1.378(c)

:

This is a decision on the electronic petition, filed December 18,2007 ,under 37 CFR 1.378(c) to accept the unintentionally delayed payment of the 3.5 year maintenance fee for the above-identified patent.

The petition is GRANTED.

The maintenance fee is accepted, and the above-identified patent reinstated as of December 18,2007. This decision also constitutes notice that the fee has been accepted. An electronic copy of the petition and this decision has been created as an entry in an Image File Wrapper. Nevertheless, petitioner should print and retain an independent copy

Telephone inquires related to this electronic decision should be directed to the Electronic Business Center at 1-866-217-9197.

UNITED STATES PATENT AND TRADEMARK OFFICE

COMMISSIONER FOR PATENTS
UNITED STATES PATENT AND TRADEMARK OFFICE
P.O. BOX 1450
ALEXANDRIA, VA 22313-1450
www.uspto.gov

Paper No. 6

TOWNSEND AND TOWNSEND AND CREW, LLP
TWO EMBARCADERO CENTER
EIGHTH FLOOR
SAN FRANCISCO, CA 94111-3834

MAIL

MAY 2 6 2004

DIRECTOR OFFICE
TECHNOLOGY CENTER 2600

In re Application of
Todd F. Mozer

Application No. 09/875,261
Filed: June 05, 2001
For: CLIENT-SERVER SECURITY SYSTEM AND METHOD

DECISION ON REQUEST TO WITHDRAW FROM RECORD

This is a decision on the Request for Withdrawal as attorney or agent and change of address filed on April 28, 2004.

A grantable request to withdraw as attorney/agent of record must:
(1) indicate the present mailing address of the attorney(s)/agent(s) who seek(s) to withdraw, and
(2) be signed by each attorney/agent seeking to withdraw or clearly be signed on their behalf, and
(3) be *approved* at least thirty (30) days prior to the maximum extendable period for response to any outstanding Office Action, and
(4) indicate the address to which future correspondence should be mailed.

Petitioner has met all of the above. Accordingly, the request is **GRANTED**.

All attorneys/agents associated with Customer No. 20350 have been withdrawn.

All future communications from the Office will be directed to the address listed below until otherwise notified by applicant. Applicant is reminded of the obligation to promptly notify the Patent and Trademark Office of any change in correspondence address to ensure receipt of all communications from the Office.

Kenneth Wieder
Special Program Examiner
Technology Center 2600
Communications
(703) 305-4710

CC: Chad Walsh, Esq.
Fountainhead Law Group
6172 Bollinger Road, #174
San Jose, CA 95129

UNITED STATES PATENT AND TRADEMARK OFFICE

COMMISSIONER FOR PATENTS
UNITED STATES PATENT AND TRADEMARK OFFICE
P.O. BOX 1450
ALEXANDRIA, VA 22313-1450
WWW.USPTO.GOV

Paper No. None

Fountainhead Law Group
Suite 509
900 Lafayette Street
Santa Clara CA 95050

COPY MAILED

SEP 11 2006

OFFICE OF PETITIONS

In re Application of Todd F. Mozer Application No. 09/875,261 Filed: June 5, 2001 Attorney Docket No.: 000001-000800US Title: CLIENT-SERVER SECURITY SYSTEM AND METHOD	DECISION ON PETITION UNDER 37 C.F.R. §1.181

This is a decision on the petition filed on June 22, 2006, pursuant to 37 C.F.R. §1.181, requesting that the holding of abandonment in the above-identified application be withdrawn.

BACKGROUND

The above-identified application became abandoned for failure to reply within the meaning of 37 C.F.R §1.113 in a timely manner to the final Office action mailed September 19, 2005, which set a shortened statutory period for reply of three months. No extensions of time under the provisions of 37 C.F.R §1.136(a) were obtained, and no further responses were received. Accordingly, the above-identified application became abandoned on December 20, 2005. A notice of abandonment was mailed on May 16, 2006.

RELEVANT PORTION OF THE MPEP

MPEP 711.03(c) states, in part:

PETITION TO WITHDRAW HOLDING OF ABANDONMENT BASED ON FAILURE TO RECEIVE OFFICE ACTION

In Delgar v. Schulyer, 172 USPQ 513 (D.D.C. 1971), the court decided that the Office should mail a new Notice of Allowance in view of the evidence presented in support of the contention that the applicant's representative did not receive the original Notice of Allowance. Under the reasoning of Delgar, an allegation that an Office action was never received may be considered in a petition to withdraw the holding of abandonment. If adequately supported, the Office may grant the petition to withdraw the holding of abandonment and remail the Office action. That is, the reasoning of Delgar is applicable regardless of whether an application is held abandoned for failure to timely pay the issue fee (35 U.S.C. 151) or for failure to prosecute (35 U.S.C. 133).

To minimize costs and burdens to practitioners and the Office, the Office has modified the showing required to establish nonreceipt of an Office action. The showing required to establish nonreceipt of an Office communication must include a statement from the practitioner stating that the Office communication was not received by the practitioner and attesting to the fact that a search of the file jacket and docket records indicates that the Office communication was not received. A copy of the docket record where the nonreceived Office communication would have been entered had it been received and docketed must be attached to and referenced in practitioner's statement. For example, if a three month period for reply was set in the nonreceived Office action, a copy of the docket report showing all replies docketed for a date three months from the mail date of the nonreceived Office action must be submitted as documentary proof of nonreceipt of the Office action. See Notice entitled "Withdrawing the Holding of Abandonment When Office Actions Are Not Received," 1156 O.G. 53 (November 16, 1993).

The showing outlined above may not be sufficient if there are circumstances that point to a conclusion that the Office action may have been lost after receipt rather than a conclusion that the Office action was lost in the mail (e.g., if the practitioner has a history of not receiving Office actions).

Evidence of nonreceipt of an Office communication or action (e.g., Notice of Abandonment or an advisory action) other than that action to which reply was required to avoid abandonment would not warrant withdrawal of the holding of abandonment. Abandonment takes place by operation of law for failure to reply to an Office action or timely pay the issue fee, not by operation of the mailing of a Notice of Abandonment. See Lorenz v. Finkl, 333 F.2d 885, 889-90, 142 USPQ 26, 29-30 (CCPA 1964); Krahn v. Commissioner, 15 USPQ2d 1823, 1824 (E.D. Va 1990); In re Application of Fischer, 6 USPQ2d 1573, 1574 (Comm'r Pat. 1988).

Two additional procedures are available for reviving an application that has become abandoned due to a failure to reply to an Office Action: (1) a petition under 37 CFR 1.137(a) based upon unavoidable delay; and (2) a petition under 37 CFR 1.137(b) based on unintentional delay.

ANALYSIS

With the present petition, Petitioner has asserted that the Office communication was not received, has attested to the fact that a search of the file jacket and docket records indicates that the Office communication was not received, and has provided a copy of the docket record where the nonreceived Office communication would have been entered had it been received and docketed.

Petitioner has further indicated that the Office communication was returned to the Office on September 26, 2005. A search of

the electronic file confirms that the mailing was returned to the Office.
The electronic file further reveals that at the time the Office action was mailed (September 19, 2005), the correspondence address of record was different from the present correspondence address, as indicated by the Change of Correspondence Address that Petitioner filed on October 24, 2005.

It is clear that sometime prior to October 24, 2005, Petitioner moved from San Jose to Santa Clara.

Applicant has not provided any indication as to when he moved. Therefore, it is not clear whether the Office action was properly mailed by this Office to the correspondence address of record in San Jose and Petitioner did not receive the Office action, or whether Petitioner had moved to Santa Clara prior to the mailing of the Office action, but failed to timely notify this Office that he was no longer located at the address of record.

Petitioner must clarify, on the record, when his correspondence address changed.

As such, the petition must be **DISMISSED.**

Any reply must be submitted within **TWO (2) MONTHS** from the mail date of this decision. Extensions of time under 37 C.F.R. §1.136(a) are permitted. The reply should include a cover letter entitled "Renewed Petition Under 37 C.F.R. 1.181(a)." This is not a final agency action within the meaning of 5 U.S.C 704.

The renewed petition should indicate in a prominent manner that the attorney handling this matter is Paul Shanoski, and may be submitted by mail[1], hand-delivery[2], or facsimile[3].

Telephone inquiries regarding *this decision* should be directed to the undersigned at (571) 272-3225[4]. All other inquiries

---

1 Mail Stop Petition, Commissioner for Patents, United States Patent and Trademark Office, P.O. Box 1450, Alexandria, VA, 22313-1450.
2 Customer Window, Randolph Building, 401 Dulaney Street, Alexandria, VA, 22314.
3 (571) 273-8300- please note this is a central facsimile number.
4 Petitioner will note that all practice before the Office should be in writing, and the action of the Office will be based exclusively on the written record in the Office. See 37 C.F.R. §1.2. As such, Petitioner is reminded that no telephone discussion may be controlling or considered authority for Petitioner's further action(s).

concerning examination procedures or status of the application should be directed to the Technology Center.

Paul Shanoski
Senior Attorney
Office of Petitions
United States Patent and Trademark Office

UNITED STATES PATENT AND TRADEMARK OFFICE

COMMISSIONER FOR PATENTS
UNITED STATES PATENT AND TRADEMARK OFFICE
P.O. BOX 1450
ALEXANDRIA, VA 22313-1450
WWW.USPTO.GOV

Paper No. None

Fountainhead Law Group
Suite 509
900 Lafayette Street
Santa Clara CA 95050

COPY MAILED
DEC 0 1 2006
OFFICE OF PETITIONS

In re Application of Todd F. Mozer Application No. 09/875,261 Filed: June 5, 2001 Attorney Docket No.: 000001-000800US Title: CLIENT-SERVER SECURITY SYSTEM AND METHOD	DECISION ON RENEWED PETITION UNDER 37 C.F.R. §1.181

This is a decision on the renewed petition filed on November 17, 2006, pursuant to 37 C.F.R. §1.181, requesting that the holding of abandonment in the above-identified application be withdrawn.

The above-identified application became abandoned for failure to reply within the meaning of 37 C.F.R §1.113 in a timely manner to the final Office action mailed September 19, 2005, which set a shortened statutory period for reply of three months. No extensions of time under the provisions of 37 C.F.R §1.136(a) were obtained, and no further responses were received. Accordingly, the above-identified application became abandoned on December 20, 2005. A notice of abandonment was mailed on May 16, 2006.

The original petition was received on June 22, 2006, and was dismissed via the mailing of a decision on September 11, 2006. Petitioner asserted that the Office communication was not received, attested that a search of the file jacket and docket records indicates that the Office communication was not received, and provided a copy of the docket record where the nonreceived Office communication would have been entered had it been received and docketed.

The decision noted that the Office communication was returned to the Office on September 26, 2005, and that at the time the Office action was mailed (September 19, 2005), the correspondence address of record was different from the present correspondence address. It was further noted that a Change of Correspondence Address was filed on October 24, 2005.

With this renewed petition, Petitioner has stated, over his registration number, that the address to which the Office communication was mailed was his correct address at the time of the mailing.

Accordingly, the petition under 37 C.F.R. §1.181(a) is **GRANTED**. The holding of abandonment is **WITHDRAWN**.

The Technology Center will be notified of this decision. The Technology Center's support staff will re-mail the final Office action of September 19, 2005, and will set a new period for response.

Telephone inquiries regarding *this decision* should be directed to the undersigned at (571) 272-3225[1]. All other inquiries concerning examination procedures or status of the application should be directed to the Technology Center.

Paul Shanoski
Senior Attorney
Office of Petitions
United States Patent and Trademark Office

---

1 Petitioner will note that all practice before the Office should be in writing, and the action of the Office will be based exclusively on the written record in the Office. See 37 C.F.R. §1.2. As such, Petitioner is reminded that no telephone discussion may be controlling or considered authority for Petitioner's further action(s).

UNITED STATES PATENT AND TRADEMARK OFFICE

Commissioner for Patents
United States Patent and Trademark Office
P.O. Box 1450
Alexandria, VA 22313-1450
www.uspto.gov

NIXON & VANDERHYE PC
901 NORTH GLEBE ROAD, 11TH FLOOR
ARLINGTON, VA 22203

COPY MAILED

NOV 29 2005

OFFICE OF PETITIONS

In re Application of	:
Smita K. Nair et al	:
Application No. 09/875,264	: DECISION GRANTING PETITION
Filed: June 7, 2001	: UNDER 37 CFR 1.313(c)(2)
Attorney Docket No. 1579-579	:

This is a decision on the petition, filed November 23, 2005, under 37 CFR 1.313(c)(2) to withdraw the above-identified application from issue after payment of the issue fee.

The petition is **GRANTED**.

The above-identified application is withdrawn from issue for consideration of a submission under 37 CFR 1.114 (request for continued examination). See 37 CFR 1.313(c)(2).

Petitioner is advised that the issue fee paid on August 15, 2005 in the above-identified application cannot be refunded. If, however, the above-identified application is again allowed, petitioner may request that it be applied towards the issue fee required by the new Notice of Allowance.[1]

Telephone inquiries should be directed to the undersigned at (571) 272-3218.

This matter is being referred to Technology Center AU 1632 for processing of the request for continued examination under 37 CFR 1.114 and for consideration of the Information Disclosure Statement.

Frances Hicks
Petitions Examiner
Office of Petitions

---

[1] *The request to apply the issue fee to the new Notice may be satisfied by completing and returning the new Issue Fee Transmittal Form PTOL-85(b) (along with any balance due at the time of payment), which includes the following language thereon: "Commissioner for Patents is requested to apply the Issue Fee and Publication Fee (if any) or re-apply any previously paid issue fee to the application identified above." Petitioner is advised that, whether a fee is indicated as being due or not, the Issue Fee Transmittal Form* ***must*** *be completed and timely submitted to avoid abandonment. Note the language in bold text on the first page of the Notice of Allowance and Fee(s) Due (PTOL-85).*

UNITED STATES PATENT AND TRADEMARK OFFICE

COMMISSIONER OF PATENTS

December 27, 2004

Robert W. Becker
Robert W. Becker & Associates
707 Highway 66 East, Suite B
Tijeras, NM 87059

In re Application of:
Jack R. Cooper, et al
Serial No: 08/875,286
Filing Date: June 5, 2001
For: ENERGY ATTENUATION DEVICE FOR A FLUID-CONVEYING LINE AND METHOD OF ATTENUATING ENERGY IN SUCH A LINE

In response to the petition received by fax on March 25, 2004, to withdraw the holding of abandonment in the above application.

The petition is Granted

The above-identified application became abandoned for failure to reply with the meaning of 37 C.D.R 1.113 in a timely manner to the Notice to File Missing Parts of Nonprovisional Application mailed August 8, 2001. Which set forth a shortened statutory period for reply of two months. Accordingly, the above-identified application became abandoned October 10, 2001.

The evidence submitted is sufficient to establish that the petitioners never received the Notice to File Missing Parts of Nonprovisional Application mailed August 8, 2001.

The office regrets any inconvenience this may have caused the client.

The application will be completed with the documents received on March 25, 2004 for release to Technology Center 3752.

Telephone inquiries concerning this application may be directed to Doshie E. Day (703) 308-3640.

Doshie Day

Doshie E. Day
Program Management Assistant
Office of Initial Patent Examination

UNITED STATES PATENT AND TRADEMARK OFFICE

COMMISSIONER FOR PATENTS
UNITED STATES PATENT AND TRADEMARK OFFICE
P.O. BOX 1450
ALEXANDRIA, VA 22313-1450
www.uspto.gov

DAYCO PRODUCTS, LLC
1 PRESTIGE PLACE
MIAMISBURG, OH 45324

COPY MAILED
MAR 15 2006
OFFICE OF PETITIONS

In re Application of	:	
CHEN	:	
Application No. 09/875,286	:	ON PETITION
Filed: June 5, 2001	:	
Attorney Docket Number:	:	
96-06B	:	

This is a decision on the Petition for Petition for Revival of Patent Application Abandoned Unintentionally Under 37 C.F.R. § 1.137(b), filed January 10, 2006.

This Petition is hereby **granted**.

The above-identified application became abandoned for failure to timely and properly reply to the Notice of Allowance and Issue Fee Due, mailed September 29, 2005. The Notice set a non-extendable three (3) month period for reply. No reply having been received, the application became abandoned on December 30, 2005. The mailing of this Decision precedes the mailing of a Notice of Abandonment.

With the instant petition, Applicant has satisfied the requirements of a grantable petition under 37 CFR 1.137(b). The issue fee is filed with the instant petition. Accordingly, the petition is granted.

This application is being referred to Publishing Division for processing into a patent.

Telephone inquiries concerning this decision should be directed to the undersigned at (571) 272-3232.

Derek L. Woods
Attorney
Office of Petitions

UNITED STATES PATENT AND TRADEMARK OFFICE

COMMISSIONER FOR PATENTS
UNITED STATES PATENT AND TRADEMARK OFFICE
P.O. BOX 1450
ALEXANDRIA, VA 22313-1450
WWW.USPTO.GOV

Paper No. 6

WEBB ZIESENHEIM LODSDON
ORKIN & HANSON PC
700 KOPPERS BUILDING
436 SEVENTH AVENUE
PITTSBURGH PA 15219-1818

COPY MAILED

SEP 0 9 2003

OFFICE OF PETITIONS

In re Application of Dale Starkey Application No. 09/875,323 Filed: June 6, 2001 Attorney Docket No. 3833-010852	: : : : :	ON PETITION

This is a decision on the petition to revive under 37 CFR 1.137(b), pursuant to 37 CFR 1.137(f), filed May 15, 2003 (Certificate of Mailing dated May 13, 2003).

The petition is **GRANTED**.

Petitioner states that the instant nonprovisional application is the subject of a PCT international application filed on June 5, 2002. However, the US Patent and Trademark Office was unintentionally not notified of this filing within 45 days subsequent to the filing of the PCT application.

In view of the above, this application became abandoned pursuant to 35 USC 122(b)(2)(B)(iii) and 37 CFR 1.213(c) for failure to timely notify the Office of the filing of an application in a foreign country, or under a multilateral international agreement, that requires publication of applications 18 months after filing.

A petition under 37 CFR 1.137(f) must be accompanied by:

(1) the reply, which is met by the notification of such filing in a foreign country or under a multinational treaty;

(2) the petition fee as set forth in 37 CFR 1.17(m); and

(3) a statement that the entire delay in filing the required reply from the due date of the reply until the filing of a grantable petition was unintentional.

The instant petition has been found to be in compliance with 37 CFR 1.137(f). Accordingly, the failure to timely notify the Office of a foreign or international filing within 45 days after the date of filing of such foreign or international application as provided by 35 USC 122(b)(2)(B)(iii) and 37 CFR 1.213(c) is accepted as having been unintentionally delayed.

The application is being forwarded to the Office of Initial Patent Examination for preexamination processing.

Telephone inquiries regarding this decision should be directed to the undersigned at (703) 305-0272.

Cliff Congo

Cliff Congo
Petitions Attorney
Office of Petitions

UNITED STATES PATENT AND TRADEMARK OFFICE

COMMISSIONER FOR PATENTS
UNITED STATES PATENT AND TRADEMARK OFFICE
P.O. BOX 1450
ALEXANDRIA, VA 22313-1450
www.uspto.gov

COPY MAILED

OCT 12 2007

OFFICE OF PETITIONS

QUALCOMM INCORPORATED
5775 MOREHOUSE DR.
SAN DIEGO, CA 92121

In re Application of
Steven A. Morley, et al.
Application No. 09/875,329
Filed: June 5, 2001
Attorney Docket No. 010327

ON PETITION

This is a decision on the petition under 37 CFR 1.137(b), filed June 21, 2007, to revive the above-identified application.

The petition is **GRANTED**.

The application became abandoned for failure to timely file a reply within the meaning of 37 CFR 1.113 to an Office action mailed November 30, 2006. This decision precedes the mailing of a Notice of Abandonment. The proposed reply required for consideration of a petition to revive must be a Notice of Appeal (and appeal fee required by 37 CFR 41.20(b)(2), an amendment that *prima facie* places the application in condition for allowance, a Request for Continued Examination and submission (37 CFR 1.114), or the filing of a continuing application under 37 CFR 1.53(b). See MPEP 711.03(c)(II)(A)(2).

The petition satisfies the requirements of 37 CFR 1.137(b) in that petitioner has supplied (1) the reply in the form of a Request for Continued Examination (RCE) under 37 CFR 1.114, including the fee of $790; (2) the petition fee of $1,500; and (3) an adequate statement of unintentional delay[1].

This application is being referred to Technology Center AU 2621 for processing of the RCE and for appropriate action by the Examiner in the normal course of business on the amendment submitted in accordance with 37 CFR 1.114.

Telephone inquiries concerning this decision should be directed to the undersigned at (571) 272-3204. Inquiries relating to further prosecution should be directed to the Technology Center.

Sherry D. Brinkley
Petitions Examiner
Office of Petitions

[1] 37 CFR 1.137(b)(3) requires a statement that the entire delay in filing the required reply from the due date for the reply until the filing of a grantable petition pursuant to 37 CFR 1.137(b) was unintentional. Although the statement contained in the petition varies from the language required by 37 CFR 1.137(b)(3), the statement will be construed as the statement required by 37 CFR 1.137(b)(3). Petitioner must notify the Office if this is **not** a correct interpretation of the statement contained in the instant petition.

UNITED STATES PATENT AND TRADEMARK OFFICE

UNITED STATES DEPARTMENT OF COMMERCE
United States Patent and Trademark Office
Address: COMMISSIONER FOR PATENTS
P.O. Box 1450
Alexandria, Virginia 22313-1450
www.uspto.gov

QUALCOMM INCORPORATED
5775 MOREHOUSE DR.
SAN DIEGO, CA 92121

Mail Date: 07/30/2010

Applicant	: Steven A. Morley	: DECISION ON REQUEST FOR
Patent Number	: 7649947	: RECALCULATION of PATENT
Issue Date	: 01/19/2010	: TERM ADJUSTMENT IN VIEW
Application No	: 09/875,329	: OF WYETH AND NOTICE OF INTENT TO
Filed	: 06/05/2001	: ISSUE CERTIFICATE OF CORRECTION
		:

The Request for Recalculation is **GRANTED** to the extent indicated.

The patent term adjustment has been determined to be **1419** days. The USPTO will *sua sponte* issue a certificate of correction reflecting the amount of PTA days determined by the recalculation.

Prior to the issuance of the certificate of correction, the USPTO will afford patentee an opportunity to be heard and request reconsideration. Accordingly, patentee has **one month or thirty (30) days**, whichever is longer, to file a request for reconsideration of this patent term adjustment calculation. See 35 U.S.C. 154(b)(3)(B)(ii) and 37 CFR 1.322(a)(4). No extensions of time will be granted under 37 CFR 1.136.

Patentee should use document code PET.OP if electronically filing a request for reconsideration of this patent term adjustment calculation. The patentee must also include the information required by 37 CFR 1.705(b)(2) and the fee required by 37 CFR 1.18(e). If patentee does not file a timely request for reconsideration of this patent term adjustment calculation including the information required by 37 CFR 1.705(b)(2) and the fee required by 37 CFR 1.18(e), the USPTO will issue a certificate of correction reflecting the PTA determination noted above.

Patentee should be aware that in order to preserve the right to review in the United States District Court for the District of Columbia of the USPTO patent term adjustment determination, patentee must ensure that he or she also take the steps required under 35 U.S.C. 154(b)(4)(A) in a timely manner. Nothing in the request for recalculation should be construed as providing an alternative time frame for commencing a civil action under 35 U.S.C. 154(b)(4)(A).

Any questions concerning this decision should be directed to the Office of Patent Legal Administration at 571-272-7702.

UNITED STATES PATENT AND TRADEMARK OFFICE

Commissioner for Patents
United States Patent and Trademark Office
P.O. Box 1450
Alexandria, VA 22313-1450
www.uspto.gov

BLAKELY SOKOLOFF TAYLOR &
ZAFMAN
12400 WILSHIRE BOULEVARD
SEVENTH FLOOR
LOS ANGELES, CA 90025-1030

COPY MAILED

APR 2 0 2005

OFFICE OF PETITIONS

In re Application of

Jean-Michel Decombe

Application No. 09/875,409

Filed: June 5, 2001

Attorney Docket No. 4418P003

DECISION ON PETITION

This is a decision on the petition under 37 CFR §1.137(b), March 21, 2005, to revive the above-identified application.

The petition is **granted**.

This application became abandoned for failure to timely remit the issue fee of $1400.00 and the publication fee of $300.00 and to file corrected drawings as required by the Notice of Allowance and Issue Fee Due and Notice of Allowability (the "Notices") mailed October 14, 2004. The Notices set forth a three (3) month statutory period for reply. No response was received within the allowable period. Accordingly, this application became abandoned on January 15, 2005.

It is not apparent whether the person signing the statement of unintentional delay was in a position to have firsthand or direct knowledge of the facts and circumstances of the delay at issue. Nevertheless, such statement is being treated as having been made as the result of a reasonable inquiry into the facts and circumstances of such delay. See 37 CFR 10.18(b) and Changes to Patent Practice and Procedure; Final Rule Notice, 62 Fed. Reg. 53131, 53178 (October 10, 1997), 1203 Off. Gaz. Pat. Office 63, 103 (October 21, 1997). In the event that such an inquiry has not been made, petitioner must make such an inquiry. If such inquiry results in the discovery that it is not correct that the entire delay in filing the required reply from the due date for the reply until the filing of a grantable petition pursuant to 37 CFR 1.137(b) was unintentional, petitioner must notify the Office.

There is no indication that the person signing the instant petition was ever given a power of attorney or authorization of agent to prosecute the above-identified application. If the person signing the instant petition desires to receive future correspondence regarding this application, the appropriate power of attorney or authorization of agent must be submitted. While a courtesy copy of this decision is being mailed to the person signing the instant petition, all future correspondence will be directed to the address of currently of record until such time as appropriate instructions are received to the contrary.

Deposit account 50-2962 will be charged $750.00 for the outstanding amount due towards the issue fee.

The application is being forwarded to the Office of Patent Publications for further processing.

Telephone inquiries concerning this matter may be directed to the undersigned at (571) 272-3222.

Kenya A. McLaughlin

Kenya A. McLaughlin
Petitions Attorney
Office of Petitions

cc:
Gary Zalewski
1096 Trestle Glen
Oakland, CA 94610

PTO/SB/66 (03-09)
Approved for use through 03/31/2012. OMB 0651-0016
U.S. Patent and Trademark Office: U.S. DEPARTMENT OF COMMERCE
Under the Paperwork Reduction Act of 1995, no persons are required to respond to a collection of information unless it displays valid OMB control number.

PETITION TO ACCEPT UNINTENTIONALLY DELAYED PAYMENT OF MAINTENANCE FEE IN AN EXPIRED PATENT (37 CFR 1.378(c))

Patent Number	Issue Date (YYYY-MM-DD)	Application Number	Filing Date (YYYY-MM-DD)	Docket Number (if applicable)
7,036,093	2006-04-25	09/875,409	2001-06-05	4418P003

CAUTION: Maintenance fee (and surcharge, if any) payment must correctly identify: (1) the patent number and (2) the application number of the actual U.S. application leading to issuance of that patent to ensure the fee(s) is/are associated with the correct patent. 37 CFR 1.366(c) and (d).

SMALL ENTITY
☐ Patentee claims, or has previously claimed, small entity status. See 37 CFR 1.27.

LOSS OF ENTITLEMENT TO SMALL ENTITY STATUS
☐ Patentee is no longer entitled to small entity status. See 37 CFR 1.27(g)

NOT Small Entity		Small Entity	
Fee	Code	Fee	Code
◉ 3 ½ year	(1551)	○ 3 ½ year	(2551)
○ 7 ½ year	(1552)	○ 7 ½ year	(2552)
○ 11 ½ year	(1553)	○ 11 ½ year	(2553)

SURCHARGE
The surcharge required by 37 CFR 1.20(i)(2) (Fee Code 1558) must be paid as a condition of accepting unintentionally delayed payment of the maintenance fee.

MAINTENANCE FEE (37 CFR 1.20(e)-(g))
The appropriate maintenance fee must be submitted with this petition.

STATEMENT
THE UNDERSIGNED CERTIFIES THAT THE DELAY IN PAYMENT OF THE MAINTENANCE FEE TO THIS PATENT WAS UNINTENTIONAL

PETITIONER(S) REQUEST THAT THE DELAYED PAYMENT OF THE MAINTENANCE FEE BE ACCEPTED AND THE PATENT REINSTATED

THIS PORTION MUST BE COMPLETED BY THE SIGNATORY OR SIGNATORIES

37 CFR 1.378(d) states: "Any petition under this section must be signed by an attorney or agent registered to practice before the Patent and Trademark Office, or by the patentee, the assignee, or other party in interest."

I certify, in accordance with 37 CFR 1.4(d)(4) that I am

◉ An attorney or agent registered to practice before the Patent and Trademark Office

○ A sole patentee

○ A joint patentee; I certify that I am authorized to sign this submission on behalf of all the other patentees.

○ A joint patentee; all of whom are signing this e-petition

○ The assignee of record of the entire interest

Patent Practitioner			
A signature of the applicant or representative is required in accordance with 37 CFR 1.33 and 10.18. Please see 37 CFR 1.4(d) for the form of the signature			
Signature	/Gregory D. Caldwell/	Date (YYYY-MM-DD)	2010-05-07
Name	Gregory D. Caldwell	Registration Number	39926

This collection of information is required by 37 CFR 1.378(c). The information is required to obtain or retain a benefit by the public which is to file (and by the USPTO to process) an application. Confidentiality is governed by 35 U.S.C. 122 and 37 CFR 1.11 and 1.14. This collection is estimated to take 1 hour to complete, including gathering, preparing, and submitting the completed application form to the USPTO. Time will vary depending upon the individual case. Any comments on the amount of time you require to complete this form and/ or suggestions for reducing this burden, should be sent to the Chief Information Officer, U.S. Patent and Trademark Office, U.S. Department of Commerce, P.O. Box 1450, Alexandria, VA 22313-1450. DO NOT SEND FEES OR COMPLETED FORMS TO THIS ADDRESS. **This form can only be used when in conjunction with EFS-Web. If this form is mailed to the USPTO, it may cause delays in reinstating the patent.**

Privacy Act Statement

The Privacy Act of 1974 (P.L. 93-579) requires that you be given certain information in connection with your submission of the attached form related to a patent application or patent. Accordingly, pursuant to the requirements of the Act, please be advised that: (1) the general authority for the collection of this information is 35 U.S.C. 2(b)(2); (2) furnishing of the information solicited is voluntary; and (3) the principal purpose for which the information is used by the U.S. Patent and Trademark Office is to process and/or examine your submission related to a patent application or patent. If you do not furnish the requested information, the U.S. Patent and Trademark Office may not be able to process and/or examine your submission, which may result in termination of proceedings or abandonment of the application or expiration of the patent.

The information provided by you in this form will be subject to the following routine uses:

1. The information on this form will be treated confidentially to the extent allowed under the Freedom of Information Act (5 U.S.C. 552) and the Privacy Act (5 U.S.C. 552a). Records from this system of records may be disclosed to the Department of Justice to determine whether the Freedom of Information Act requires disclosure of these records.

2. A record from this system of records may be disclosed, as a routine use, in the course of presenting evidence to a court, magistrate, or administrative tribunal, including disclosures to opposing counsel in the course of settlement negotiations.

3. A record in this system of records may be disclosed, as a routine use, to a Member of Congress submitting a request involving an individual, to whom the record pertains, when the individual has requested assistance from the Member with respect to the subject matter of the record.

4. A record in this system of records may be disclosed, as a routine use, to a contractor of the Agency having need for the information in order to perform a contract. Recipients of information shall be required to comply with the requirements of the Privacy Act of 1974, as amended, pursuant to 5 U.S.C. 552a(m).

5. A record related to an International Application filed under the Patent Cooperation Treaty in this system of records may be disclosed, as a routine use, to the International Bureau of the World Intellectual Property Organization, pursuant to the Patent Cooperation Treaty.

6. A record in this system of records may be disclosed, as a routine use, to another federal agency for purposes of National Security review (35 U.S.C. 181) and for review pursuant to the Atomic Energy Act (42 U.S.C. 218(c)).

7. A record from this system of records may be disclosed, as a routine use, to the Administrator, General Services, or his/her designee, during an inspection of records conducted by GSA as part of that agency's responsibility to recommend improvements in records management practices and programs, under authority of 44 U.S.C. 2904 and 2906. Such disclosure shall be made in accordance with the GSA regulations governing inspection of records for this purpose, and any other relevant (i.e., GSA or Commerce) directive. Such disclosure shall not be used to make determinations about individuals.

8. A record from this system of records may be disclosed, as a routine use, to the public after either publication of the application pursuant to 35 U.S.C. 122(b) or issuance of a patent pursuant to 35 U.S.C. 151. Further, a record may be disclosed, subject to the limitations of 37 CFR 1.14, as a routine use, to the public if the record was filed in an application which became abandoned or in which the proceedings were terminated and which application is referenced by either a published application, an application open to public inspections or an issued patent.

9. A record from this system of records may be disclosed, as a routine use, to a Federal, State, or local law enforcement agency, if the USPTO becomes aware of a violation or potential violation of law or regulation.

UNITED STATES PATENT AND TRADEMARK OFFICE

Commissioner for Patents
United States Patent and Trademark Office
P.O. Box 1450
Alexandria, VA 22313-1450
www.uspto.gov

In re Patent No. 7036093
Issue Date: April 25,2006
Application No. 09875409
Filed: June 5,2001
Attorney Docket No. 4418P003

:DECISION GRANTING PETITION
:UNDER 37 CFR 1.378(c)

This is a decision on the electronic petition, filed May 7,2010 ,under 37 CFR 1.378(c) to accept the unintentionally delayed payment of the 3.5 year maintenance fee for the above-identified patent.

The petition is **GRANTED**.

The maintenance fee is accepted, and the above-identified patent reinstated as of May 7,2010 .
This decision also constitutes notice that the fee has been accepted. An electronic copy of the petition and this decision has been created as an entry in the Image File Wrapper. Nevertheless, petitioner should print and retain an independent copy.

Telephone inquiries related to this electronic decision should be directed to the Electronic Business Center at 1-866-217-9197.

UNITED STATES PATENT AND TRADEMARK OFFICE

COMMISSIONER FOR PATENT
UNITED STATES PATENT AND TRADEMARK OFFIC
WASHINGTON, D.C. 20231
www.uspto.go

Paper No. 7

Blakely, Sokoloff, Taylor & Zafman LLP
12400 Wilshire Blvd
Seventh Floor
Los Angeles, CA 90025

MAILED

OCT 0 3 2002

Technology Center 2100

In re Application of: Ali Kutay et al.
Application No. 09/875,416
Filed: June 5, 2001
For: SYSTEM AND METHOD FOR ACCESSING, ORGANIZING, AND PRESENTING DATA

DECISION ON PETITION FOR ACCELERATED EXAMINATION UNDER M.P.E.P. §708.02(VIII)

This is a decision on the petition, filed April 1, 2002 under 37 C.F.R. §1.102(d) and M.P.E.P. §708.02(VIII): Accelerated Examination, to make the above-identified application special.

The Petition is **DISMISSED**

M.P.E.P. §708.02, Section VIII which sets out the prerequisites for a grantable petition for Accelerated Examination under 37 C.F.R. §1.102(d) states in relevant part:

A new application (one which has not received any examination by the examiner) may be granted special status provided that applicant (and this term includes applicant's attorney or agent) complies with each of the following items:

(a) Submits a petition to make special accompanied by the fee set forth in 37 CFR 1.17(h);

(b) Presents all claims directed to a single invention, or if the Office determines that all the claims presented are not obviously directed to a single invention, will make an election without traverse as a prerequisite to the grant of special status.

(c) Submits a statement(s) that a pre - examination search was made, listing the field of search by class and subclass, publication, Chemical Abstracts, foreign patents, etc. A search made by a foreign patent office satisfies this requirement;

(d) Submits one copy each of the references deemed most closely related to the subject matter encompassed by the claims if said references are not already of record; and

(e) Submits a detailed discussion of the references, which discussion points out, with the particularity required by 37 CFR 1.111(b) and (c), how the claimed subject matter is patentable over the references.

> In those instances where the request for this special status does not meet all the prerequisites set forth above, ***applicant will be notified and the defects in the request will be stated.*** The application will remain in the status of a new application awaiting action in its regular turn. In those instances where a request is defective in one or more respects, applicant will be given one opportunity to perfect the request in a renewed petition to make special. If perfected, the request will then be granted. If not perfected in the first renewed petition, any additional renewed petitions to make special may or may not be considered at the discretion of the Group Special Program Examiner.

Applicant's submission fails on two counts. The petition is deficient in that (1) it does not meet criterion (b) above because it does not present claims obviously directed to a single invention nor state that an election will be made without traverse; and (2) it does not provide a statement(s) that a pre - examination search was made, listing the field of search by class and subclass, publication as required by section (c) above.

Accordingly, the Petition is **DISMISSED**. The application file is being forwarded to Central Files to await examination in its proper turn based on its effective filing date.

Any request for reconsideration must be filed within two months of the mailing date of this decision.

Pinchus M. Laufer
Special Programs Examiner
Technology Center 2100
Computer Security, Architecture, and Software
(703) 306-4160

UNITED STATES PATENT AND TRADEMARK OFFICE

COMMISSIONER FOR PATENT
UNITED STATES PATENT AND TRADEMARK OFFIC
WASHINGTON, D.C. 20231
www.uspto.go

Paper No. 9

MAILED

DEC 3 1 2002

Technology Center 2100

Blakely, Sokoloff, Taylor & Zafman LLP
12400 Wilshire Blvd
Seventh Floor
Los Angeles, CA 90025

In re Application of: Ali Kutay et al.	)	
Application No. 09/875,416	)	**DECISION ON PETITION FOR**
Filed: June 5, 2001	)	**ACCELERATED EXAMINATION**
For: SYSTEM AND METHOD FOR	)	**UNDER M.P.E.P. §708.02(VIII)**
ACCESSING, ORGANIZING, AND	)	
PRESENTING DATA	)	

This is a decision on the renewed petition, filed November 15, 2002 under 37 C.F.R. §1.102(d) and M.P.E.P. §708.02(VIII): Accelerated Examination, to make the above-identified application special.

M.P.E.P. §708.02, Section VIII which sets out the prerequisites for a grantable petition for Accelerated Examination under 37 C.F.R. §1.102(d) states in relevant part:

A new application (one which has not received any examination by the examiner) may be granted special status provided that applicant (and this term includes applicant's attorney or agent) complies with each of the following items:

(a) Submits a petition to make special accompanied by the fee set forth in 37 CFR 1.17(i);

(b) Presents all claims directed to a single invention, or if the Office determines that all the claims presented are not obviously directed to a single invention, will make an election without traverse as a prerequisite to the grant of special status.

(c) Submits a statement(s) that a pre - examination search was made, listing the field of search by class and subclass, publication, Chemical Abstracts, foreign patents, etc. A search made by a foreign patent office satisfies this requirement;

(d) Submits one copy each of the references deemed most closely related to the subject matter encompassed by the claims if said references are not already of record; and

(e) Submits a detailed discussion of the references, which discussion points out, with the particularity required by 37 CFR 1.111(b) and (c), how the claimed subject matter is patentable over the references.

Applicant's submission meets all the criteria set out above, accordingly, the Petition is **GRANTED**.

The application file is being forwarded to the Examiner of Record for accelerated examination according to the procedures set forth in M.P.E.P. §708.02, Section VIII.

Pinchus M. Laufer
Special Programs Examiner
Technology Center 2100
Computer Security, Architecture, and Software
(703) 306-4160

UNITED STATES PATENT AND TRADEMARK OFFICE

COMMISSIONER FOR PATENTS
UNITED STATES PATENT AND TRADEMARK OFFICE
P.O. BOX 1450
ALEXANDRIA, VA 22313-1450
www.uspto.gov

Paper No. 11

Jones Day
555 West Fifth Street
Suite 4600
Los Angeles, CA 90071

COPY MAILED
NOV 1 5 2004
OFFICE OF PETITIONS

In re Application of	:	
Stephen Flock, et al.	:	
Application No. 09/875,497	:	ON PETITION
Filed: June 5, 2001	:	
Attorney Docket No. 587665-100003	:	

This is a decision on the petition under 37 CFR 1.137(b), filed September 29, 2004, to revive the above-identified application.

The petition is **GRANTED**.

Pursuant to 37 CFR 1.136, an extension of time must be filed prior to the expiration of the maximum period obtainable for reply to avoid abandonment. Since the $475 extension of time fee submitted with the present petition was subsequent to the six-month statutory period for reply, this fee is unnecessary and will be credited to petitioner's deposit account.

Telephone inquiries concerning this decision should be directed to the undersigned at (571) 272-3223.

The application file is being forwarded to Technology Center 3700.

Marianne E. Jenkins
Petitions Examiner
Office of Petitions
Office of the Deputy Commissioner
for Patent Examination Policy

L465780540

UNITED STATES PATENT AND TRADEMARK OFFICE

Commissioner for Patents
United States Pat nt and Trademark Office
Washington, D.C. 20231
www.uspto.gov

Paper No. 8

COPY MAILED

NOV 2 8 2000

OFFICE OF PETITIONS
A/C PATENTS

jc996 U.S. PTO
09/875501
06/04/01

WELLS, ST. JOHN, ROBERTS,
GREGORY & MATKIN, P.S.
601 W. FIRST AVENUE
SUITE 1300
SPOKANE, WA 99201-3828

In re Application of
Schuegraf and Thakur
Application No. 09/332,271
Filed: June 11, 1999
Attorney Docket No. MI22-532
For: Methods for Forming
Wordlines, Transistor Gates, and
Conductive Interconnects, and
Wordline, Transistor Gate, and
Conductive Interconnect Structures

DECISION ACCORDING
STATUS UNDER 37 CFR 1.47(a)

This is in response to the Request for Reconsideration of petition under 37 CFR 1.47(a), filed September 29, 2000.

The petition is **granted**.

Petitioner has shown that the non-signing inventor has refused to join in the filing of the above-identified application after having been presented with the application papers.

The above-identified application and papers have been reviewed and found in compliance with 37 CFR 1.47(a). This application is hereby accorded Rule 1.47(a) status.

As provided in Rule 1.47(a), this Office will forward notice of this application's filing to the non-signing inventor at the address given in the petition. Notice of the filing of this application will also be published in the Official Gazette.

This file is being forwarded to the Office of Initial Patent Examination.

Telephone inquiries regarding this decision should be directed to Petitions Attorney Christina T. Tartera at (703) 306-5589.

Beverly M. Flanagan
Supervisory Petitions Examiner
Office of Petitions
Office of the Deputy Commissioner
for Patent Examination Policy

UNITED STATES PATENT AND TRADEMARK OFFICE

COMMISSIONER FOR PATENTS
UNITED STATES PATENT AND TRADEMARK OFFICE
WASHINGTON, D.C. 20231
www.uspto.gov
DW 12-01

Paper No. 5

David W. Nagle, Jr.
Stites & Harbison, P.L.L.C.
400 W. Market Street
Louisville, Kentucky 40202-3352

COPY MAILED

DEC 1 9 2001

OFFICE OF PETITIONS

In re Application of
Janusz, *et al.*
Application No. 09/875,529
Filed: June 6, 2001
Attorney Docket No. RF000/000RF-U

LETTER

This is in response to the August 30, 2001 petition under 37 C.F.R. §1.47(a).

This application was filed on June 6, 2001. However, the application lacked a declaration signed by inventor Gerald E. Janusz; his signature is required under 35 U.S.C. §25, 35 U.S.C. §115, 37 C.F.R. §1.63, and 37 C.F.R. §1.68. Accordingly, the Office of Initial Patent Examination (hereinafter "OIPE") mailed a notice to file missing parts of nonprovisional application (hereinafter "notice") to the address of record on August 3, 2001. The notice requested a signed declaration and set a two month period for replying. Petitioner responded with the August 30, 2001 filing of this petition.

A grantable petition under 37 C.F.R. §1.47(a) requires: (1) proof that the non-signing inventor cannot be reached or refuses to sign the oath or declaration; (2) an acceptable oath or declaration; (3) the petition fee; and (4) a statement of the last known address of the non-signing inventor.[1]

With respect to requirement number (3) above, advance payment of Patent and Trademark Office fees are required before the action requested can be taken.[2] Petitioner has not yet paid the required petition fee.[3] Therefore, this petition lacks requirement number (3) above and is accordingly **DISMISSED**.

---

[1] *See* 37 C.F.R. §1.47 "Filing when an inventor refuses to sign or cannot be reached."

[2] "37 C.F.R. §1.22 Fees payable in advance.
(a) Patent and trademark fees and charges payable to the Patent and Trademark Office are required to be paid in advance, that is, at the time of requesting any action by the Office for which a fee or charge is payable..."

[3] 37 C.F.R. §1.17(h) sets this fee at $130.00.

Petitioner is given TWO MONTHS from the mailing date of this decision to respond, correcting the above-noted deficiency. Any response should be entitled "Request for Reconsideration of Petition Under 37 C.F.R. §1.47(a)" and may include an oath or declaration executed by the inventor. Failure to respond will result in abandonment of the application. Any extensions of time will be governed by 37 C.F.R. §1.136(a).

Further correspondence with respect to this matter should be addressed as follows:

By mail: Assistant Commissioner for Patents
Box DAC
Washington, D.C. 20231

By FAX: (703) 308-6916
Attn: Special Program Law Office

By hand: Crystal Plaza Four, Suite 3C23
2201 S. Clark Place
Arlington, VA

Telephone inquiries related to this decision should be directed to the undersigned at 703-306-5593.

Scott M. Ledford
Petitions Attorney
Office of Petitions
Office of the Deputy Commissioner
for Patent Examination Policy

UNITED STATES PATENT AND TRADEMARK OFFICE

Commissioner for Patents
United States Patent and Trademark Office
Washington, D.C. 20231
www.uspto.gov

Paper No. 8

STITES & HARBISON, PLLC
400 W MARKET ST
SUITE 1800
LOUISVILLE KY 40202-3352

COPY MAILED

JAN 03 2003

OFFICE OF PETITIONS

In re Application of Janusz, Payne, Prell, and Pol Application No. 09/875,529 Filed: June 6, 2001 For: METHOD AND SYSTEM FOR TRANSMITTING, RECEIVING AND COLLECTING INFORMATION RELATED TO A PLURALITY OF WORKING COMPONENTS	:	DECISION GRANTING PETITION UNDER 37 CFR 1.47(a)

This is in response to the renewed petition under 37 CFR 1.47(a), filed January 23, 2002. The application file was recently forwarded to the Office of Petitions for a decision on the petition. The Office apologizes for any inconvenience.

The petition is granted.

Petitioner has shown that Gerald E. Janusz, the non-signing inventor, has refused to join in the filing of the above-identified application after having been presented with the application papers. Specifically, the statement of facts of David W. Nagle, Jr. establishes that the inventor, via his attorney, was mailed the application papers, including the specification, claims and drawings, but failed to respond to the request that he sign the declaration.

The above-identified application and papers have been reviewed and found in compliance with 37 CFR 1.47(a). This application is hereby accorded Rule 1.47(a) status. As provided in Rule 1.47(c), this Office will forward notice of this application's filing to the non-signing inventor at his attorney's address given in the present petition. Notice of the filing of this application will also be published in the Official Gazette.

The application file is being forwarded to Technology Center 2600 for examination in due course.

Telephone inquiries regarding this decision should be directed to the undersigned at (703) 306-5589.

Christina Tartera Donnell

Christina Tartera Donnell
Senior Petitions Attorney
Office of Petitions
Office of the Deputy Commissioner
for Patent Examination Policy

UNITED STATES PATENT AND TRADEMARK OFFICE

Commissioner for Patents
United States Patent and Trademark Office
Washington, D.C. 20231
www.uspto.gov

Gerald E. Janusz
c/o Joseph H. Blandford, Jr.
P.O. Box 70302
Louisville KY 40270-0302

COPY MAILED

JAN 03 2003

OFFICE OF PETITIONS

In re Application of :
Janusz, Payne, Prell, and Pol :
Application No. 09/875,529 :
Filed: June 6, 2001 : LETTER
For: METHOD AND SYSTEM FOR :
TRANSMITTING, RECEIVING AND :
COLLECTING INFORMATION RELATED :
TO A PLURALITY OF WORKING :
COMPONENTS :

Dear Mr. Janusz:

You are named as a joint inventor in the above-identified United States patent application filed under the provisions of 35 U.S.C. 116 (United States Code) and 37 CFR 1.47(a), Rules of Practice in Patent Cases. Should a patent be granted on the application you will be designated therein as a joint inventor.

As a named inventor you are entitled to inspect any paper in the file wrapper of the application, order copies of all or any part thereof (at a prepaid cost per 37 CFR 1.19) or make your position of record in the application. Alternatively, you may arrange to do any of the preceding through a registered patent attorney or agent presenting written authorization from you. If you care to join the application, counsel of record (see below) would presumably assist you. Joining in the application would entail the filing of an appropriate oath or declaration by you pursuant to 37 CFR 1.63.

Telephone inquiries regarding this communication should be directed to Petitions Attorney Christina Tartera Donnell at (703) 306-5589. Requests for information regarding your application should be directed to the File Information Unit at (703) 308-2733. Information regarding how to pay for and order a copy of the application, or a specific paper in the application, should be directed to Certification Division at (703) 308-9726 or 1-800-972-6382 (outside the Washington D.C. area).

Christina Tartera Donnell

Christina Tartera Donnell
Senior Petitions Attorney
Office of Petitions
Office of the Deputy Commissioner
for Patent Examination Policy

STITES & HARBISON, PLLC
400 W MARKET ST
SUITE 1800
LOUISVILLE KY 40202-3352

UNITED STATES PATENT AND TRADEMARK OFFICE

COMMISSIONER FOR PATENTS
UNITED STATES PATENT AND TRADEMARK OFFICE
WASHINGTON, D.C. 20231
www.uspto.gov

Paper No. 4

COPY MAILED

MAY 3 1 2002

OFFICE OF PETITIONS

Milton Wolson, Esq.
Malina & Wolson
60 East 42nd Street
New York, NY 10165

In re Application of	:	
Peterson	:	
Application No. 09/875,542	:	DECISION GRANTING STATUS
Filed: June 6, 2001	:	UNDER 37 CFR 1.47(b)
Attorney Docket No. LEH-33	:	
For: METATARSAL GUARD	:	

This is in response to the petition under 37 CFR 1.47(b), filed June 6, 2001 and supplemented March 14, 2002.

The petition is **GRANTED**.

Petitioner has shown that inventor Ruk Peterson has refused to join in the filing of the above-identified application after having been presented with the application papers.

The above-identified application and papers have been reviewed and found in compliance with 37 CFR 1.47(b). This application is hereby accorded Rule 1.47(b) status.

As provided in Rule 1.47(c), this Office will forward notice of this application's filing to the non-signing inventor at the address given in the petition. Notice of the filing of this application will also be published in the Official Gazette.

After this decision is mailed, the above-identified application will be returned to the Office of Initial Patent Examination for further processing.

Telephone inquiries related to this decision may be directed to Petitions Attorney Alesia M. Brown at (703) 305-0310.

Beverly M. Flanagan
Supervisory Petitions Examiner
Office of Petitions
Office of the Deputy Commissioner
for Patent Examination Policy

Alesia M. Brown
Petitions Attorney
Office of Petitions
Office of the Deputy Commissioner
for Patent Examination Policy

UNITED STATES PATENT AND TRADEMARK OFFICE

COMMISSIONER FOR PATENTS
UNITED STATES PATENT AND TRADEMARK OFFICE
WASHINGTON, D.C. 20231
www.uspto.gov

RUK PETERSON
1039 ELTON DRIVE
ENDICOTT, NY 13760

COPY MAILED

MAY 3 1 2002

OFFICE OF PETITIONS

In re Application of
Peterson
Application No. 09/875,542
Filed: June 6, 2001
Attorney Docket No. LEH-33
For: METATARSAL GUARD

LETTER

Dear Sir:

You are named as a joint inventor in the above-identified United States patent application filed under the provisions of 35 U.S.C. 116 (United States Code) and 37 C.F.R. § 1.47(b), Rules of Practice in Patent Cases. Should a patent be granted on the application you will be designated therein as a joint inventor.

As a named inventor you are entitled to inspect any paper in the file wrapper of the application, order copies of all or any part thereof (at a prepaid cost as per 37 C.F.R. § 1.19) or make your position of record in the application. Alternatively, you may arrange to do any of the preceding through a registered patent attorney or agent presenting written authorization from you. If you care to join the application, counsel of record (see below) would presumably assist you. Joining in the application would entail the filing of an appropriate oath or declaration by you pursuant to 37 C.F.R. § 1.63.

Telephone inquiries regarding this communication should be directed to Petitions Attorney Alesia M. Brown at (703) 305-0310. Requests for information regarding your application should be directed to the File Information Unit at (703) 308-2733. Information regarding how to pay for and order a copy of the application, or a specific paper in the application, should be directed to Certification Division at (703) 308-9726 or 1-800-972-6382 (outside the Washington D.C. area).

Beverly M. Flanagan
Supervisory Petitions Examiner
Office of Petitions
Office of the Deputy Commissioner
for Patent Examination Policy

Alesia M. Brown
Petitions Attorney
Office of Petitions
Office of the Deputy Commissioner
for Patent Examination Policy

CC: Milton Wolson, Esq.
Malina & Wolson
60 East 42nd Street
New York, NY 10165

UNITED STATES PATENT AND TRADEMARK OFFICE

Commissioner for Patents
United States Patent and Trademark Office
P.O. Box 1450
Alexandria, VA 22313-1450
www.uspto.gov
DIW Dec-08

KRAGULJAC & KALNAY
4700 ROCKSIDE ROAD
SUMMIT ONE, SUITE 510
INDEPENDENCE OH 44131

RECEIVED
DEC 23 2008
OFFICE OF PETITIONS

In re Application of :
Aviani et al. :
Application Number: 09/875543 :
Filing Date: 06/06/2001 : ON PETITION
Attorney Docket Number: 100308 :

This is a decision on the petition under 37 CFR 1.137(b)[1] filed on November 19, 2008, to revive the above-identified application.

The petition is **GRANTED**.

The application became abandoned on June 25, 2006, for failure to timely submit a proper reply to the final Office action mailed on January 24, 2006, which set a three (3) month shortened statutory period for reply. On March 22, 2006, an amendment after final rejection was filed. On April 21, 2006, an Advisory Action Before the Filing of an Appeal Brief was mailed, stating that the proposed reply failed to place the application in condition for allowance. On June 30, 2006 (certificate of mailing date June

---

[1] Effective December 1, 1997, the provisions of 37 CFR 1.137(b) now provide that where the delay in reply was unintentional, a petition may be filed to revive an abandoned application or a lapsed patent pursuant to 37 CFR 1.137(b). A grantable petition filed under the provisions of 37 CFR 1.137(b) must be accompanied by:

(1) the required reply, unless previously filed. In a nonprovisional application abandoned for failure to prosecute, the required reply may be met by the filing of a continuing application. In a nonprovisional application filed on or after June 8, 1995, and abandoned for failure to prosecute, the required reply may also be met by the filing of a request for continued examination in compliance with § 1.114. In an application or patent, abandoned or lapsed for failure to pay the issue fee or any portion thereof, the required reply must be the payment of the issue fee or any outstanding balance thereof. In an application abandoned for failure to pay the publication fee, the required reply must include payment of the publication fee.

(2) the petition fee as set forth in 37 CFR 1.17(m);

(3) a statement that the entire delay in filing the required reply from the due date for the reply until the filing of a grantable petition pursuant to 37 CFR 1.137(b) was unintentional. The Director may required additional information where there is a question whether the delay was unintentional; and

(4) any terminal disclaimer (and fee as set forth in 37 CFR 1.20(d)) required pursuant to 37 CFR 1.137(c)).

26, 2006), a Pre-Appeal Brief Request for Review was filed, along with a two (2) month extension of time and the fee for filing a Notice of Appeal. However, no Notice of Appeal was filed. Notice of Abandonment was mailed on April 10, 2008.

It is not apparent whether the person signing the statement of unintentional delay was in a position to have firsthand or direct knowledge of the facts and circumstances of the delay at issue. Nevertheless, such statement is being treated as having been made as the result of a reasonable inquiry into the facts and circumstances of such delay.[2] In the event that such an inquiry has not been made, petitioner must make such an inquiry. If such inquiry results in the discovery that it is not correct that the entire delay in filing the required reply from the due date for the reply until the filing of a grantable petition pursuant to 37 CFR 1.137(b) was unintentional, petitioner must notify the Office.

The above-identified application has been abandoned for an extended period of time. The Patent and Trademark Office is relying on petitioner's duty of candor and good faith and accepting the statement that the entire delay in filing the required reply from the due date for the reply until the filing of a grantable petition pursuant to 37 CFR 1.137(b) was unintentional.[3]

Petitioner has filed a Request for Continued Examination (RCE), and an amendment as the submission required under 37 CFR 1.114.

This application is being referred to Technology Center Art Unit 2143 for further processing.

Telephone inquiries concerning this matter may be directed to the undersigned at (571) 272-3231.

D Wood

Douglas I. Wood
Senior Petitions Attorney
Office of Petitions

---

[2] See 37 CFR 10.18(b) and Changes to Patent Practice and Procedure; Final Rule Notice, 62 Fed. Reg. 53131, 53178 (October 10, 1997), 1208 Off. Gaz. Pat. Office 63, 103 (October 21, 1997).

[3] See Changes to Patent Practice and Procedure, 62 Fed. Reg. at 53160 and 53178, 1203 Off. Gaz. Pat. Office at 88 and 103 (responses to comments 64 and 109) (applicant obligated under 37 CFR 10.18 to inquire into the underlying facts and circumstances when providing the statement required by 37 CFR 1.137(b) to the Patent and Trademark Office).

UNITED STATES PATENT AND TRADEMARK OFFICE

UNITED STATES DEPARTMENT OF COMMERCE
United States Patent and Trademark Office
Address: COMMISSIONER FOR PATENTS
P.O. Box 1450
Alexandria, Virginia 22313-1450
www.uspto.gov

PATTERSON & SHERIDAN, LLP/CISC
3040 POST OAK BLVD.
SUITE 1500
HOUSTON, TX 77056-6582

Mail Date: 06/02/2010

Applicant	: James A. Aviani	: DECISION ON REQUEST FOR
Patent Number	: 7624184	: RECALCULATION of PATENT
Issue Date	: 11/24/2009	: TERM ADJUSTMENT IN VIEW
Application No	: 09/875,543	: OF WYETH AND NOTICE OF INTENT TO
Filed	: 06/06/2001	: ISSUE CERTIFICATE OF CORRECTION
		:

The Request for Recalculation is **GRANTED** to the extent indicated.

The patent term adjustment has been determined to be **1319** days. The USPTO will *sua sponte* issue a certificate of correction reflecting the amount of PTA days determined by the recalculation.

Prior to the issuance of the certificate of correction, the USPTO will afford patentee an opportunity to be heard and request reconsideration. Accordingly, patentee has **one month or thirty (30) days**, whichever is longer, to file a request for reconsideration of this patent term adjustment calculation. See 35 U.S.C. 154(b)(3)(B)(ii) and 37 CFR 1.322(a)(4). No extensions of time will be granted under 37 CFR 1.136.

Patentee should use document code PET.OP if electronically filing a request for reconsideration of this patent term adjustment calculation. The patentee must also include the information required by 37 CFR 1.705(b)(2) and the fee required by 37 CFR 1.18(e). If patentee does not file a timely request for reconsideration of this patent term adjustment calculation including the information required by 37 CFR 1.705(b)(2) and the fee required by 37 CFR 1.18(e), the USPTO will issue a certificate of correction reflecting the PTA determination noted above.

Patentee should be aware that in order to preserve the right to review in the United States District Court for the District of Columbia of the USPTO patent term adjustment determination, patentee must ensure that he or she also take the steps required under 35 U.S.C. 154(b)(4)(A) in a timely manner. Nothing in the request for recalculation should be construed as providing an alternative time frame for commencing a civil action under 35 U.S.C. 154(b)(4)(A).

Any questions concerning this decision should be directed to the Office of Patent Legal Administration at 571-272-7702.

SPE RESPONSE FOR CERTIFICATE OF CORRECTION

Paper No.: _____

DATE : 10/13/09

TO SPE OF : ART UNIT 2195

SUBJECT : Request for Certificate of Correction for Appl. No 09/875,549.: No.: 7,480,910--

Please respond to this request for a certificate of correction within 7 days.

FOR IFW FILES:

Please review the requested changes/corrections as shown in the **COCIN** document(s) in the IFW application image. No new matter should be introduced, nor should the scope or meaning of the claims be changed.

Please complete the response (see below) and forward the completed response to scanning using document code **COCX**.

FOR PAPER FILES:

Please review the requested changes/corrections as shown in the attached certificate of correction. Please complete this form (see below) and forward it with the file to:

Certificates of Correction Branch (CofC)

Should the change Be made?

RoChaun Johnson
Certificates of Correction Branch
571 272-0470

Thank You For Your Assistance

The request for issuing the above-identified correction(s) is hereby:
Note your decision on the appropriate box.

X **Approved**	**All** changes apply.
☐ **Approved in Part**	Specify below which changes **do not** apply.
☐ **Denied**	State the reasons for denial below.

Comments: No new matter has been added

/Meng-Ai An/ 2195

UNITED STATES PATENT AND TRADEMARK OFFICE

Commissioner for Patents
United States Patent and Trademark Office
P.O. Box 1450
Alexandria, VA 22313-1450
www.uspto.gov

MAILED

MAR 02 2010

OFFICE OF PETITIONS

FISH & RICHARDSON P.C.
P.O. Box 1022
MINNEAPOLIS MN 55440-1022

In re Patent No. 7,480,910	:	DECISION ON REQUEST FOR
KUWAMOTO et al.	:	RECONSIDERATION OF
Issue Date: January 20, 2009	:	PATENT TERM ADJUSTMENT AND
Application No. 09/875,549	:	NOTICE OF INTENT TO ISSUE
Filed: June 6, 2001	:	CERTIFICATE OF CORRECTION
Atty Docket No. 07844-731001	:	

This is a decision on the petition filed on March 18, 2009, which is being treated as a petition under 37 CFR 1.705(d) requesting that the patent term adjustment indicated on the above-identified patent be corrected to indicate that the term of the above-identified patent is extended or adjusted by eight hundred eighty-two (882) days.

The petition to correct the patent term adjustment indicated on the above-identified patent is **GRANTED to the extent** that the term of the above-identified patent is extended or adjusted by nine hundred thirty-nine (939) days.

As the period from the filing date of the request for continued examination (RCE) to the issue date of the patent is not included in the "B" delay period, the over three year period begins on June 7, 2004, and ends on October 10, 2005, the day before the RCE was filed, and is 427 (not 428) days. See 35 U.S.C. 154(b)(1)(B)(i). Moreover, the Office has determined that there are zero (0) days of overlap, not 58 days as indicated by patentee. As such, the patent term adjustment is 939, not 882 days.

The Office will *sua sponte* issue a certificate of correction. Pursuant to 37 CFR 1.322, the Office will not issue a

certificate of correction without first providing assignee or patentee an opportunity to be heard. Accordingly, patentee is given **one (1) month or thirty (30) days**, whichever is longer, from the mail date of this decision to respond. No extensions of time will be granted under § 1.136.

The required fee of $200.00 pursuant to 37 CFR 1.18(e) will be charged to the Deposit Account as authorized.

This matter is being referred to the Certificates of Branch for issuance of a certificate of correction. The Office will issue a certificate of correction indicating that the term of the above-identified patent is extended or adjusted by **nine hundred thirty-nine (939) days**.

Telephone inquiries specific to this matter should be directed to the undersigned at (571) 272-3211.

Christina Tartera Donnell

Christina Tartera Donnell
Senior Petitions Attorney
Office of Petitions

Enclosure: Copy of DRAFT Certificate of Correction

UNITED STATES PATENT AND TRADEMARK OFFICE

CERTIFICATE OF CORRECTION

PATENT : 7,480,910 B1

DATED : Jan. 20, 2009 **DRAFT**

INVENTOR(S) : Kuwamoto et al.

It is certified that error appears in the above-identified patent and that said Letters Patent is hereby corrected as shown below:

On the cover page,

[*] Notice: Subject to any disclaimer, the term of this patent is extended or adjusted under 35 USC 154(b) by 512 days

Delete the phrase "by 512 days" and insert – by 939 days--

SPE RESPONSE FOR CERTIFICATE OF CORRECTION

DATE : ~~5/3/06~~ 7/20/06

Paper No.: ——

TO SPE OF : ART UNIT 2133

SUBJECT : Request for Certificate of Correction for Appl. No. 9/875567 Patent No. 6993695B2

Please respond to this request for a certificate of correction within 7 days.

Please review the requested changes/corrections as shown in the **COCIN** document(s) in the IFW application image. No new matter should be introduced, nor should the scope or meaning of the claims be changed.

Please complete the response (see below) and forward the completed response to scanning using document code **COCX**.

Virginia Tolbert
Certificates of Correction Branch

703-308-9390 ext. 113

Thank You For Your Assistance

The request for issuing the above-identified correction(s) is hereby:
Note your decision on the appropriate box.

- ☑ **Approved** — **All** changes apply.
- ☐ **Approved in Part** — Specify below which changes **do not** apply.
- ☐ **Denied** — State the reasons for denial below.

Comments: Corrections for Claims 27 and 34 are approved.

JACQUES LOUIS-JACQUES
~~SUPERVISORY PATENT EXAMINER~~
TECHNOLOGY CENTER 2100

SPE

2112
Art Unit

UNITED STATES PATENT AND TRADEMARK OFFICE

COMMISSIONER FOR PATENTS
UNITED STATES PATENT AND TRADEMARK OFFICE
WASHINGTON, D.C. 20231
www.uspto.gov

Paper No. 5

James A. Sheridan
Pandiscio & Pandiscio
470 Totten Pond Road
Waltham, MA 02451-1914

COPY MAILED

MAY 24 2002

OFFICE OF PETITIONS

In re Application of
Rickey D. Hart et al.
Application No. 09/875,588
Filed: June 6, 2001
Attorney Docket No. INNO-15 CON 3

ON PETITION

This is a decision on the petition under 37 CFR 1.137(b), filed March 26, 2002, to revive the above-identified application.

The petition is **GRANTED**.

The above-identified application became abandoned for failure to reply in a timely manner to the Notice to File Missing Parts of Application (Notice) mailed June 20, 2001. The Notice set a period for reply of two (2) months from the mail date of the Notice. No extensions of time under the provisions of 37 CFR 1.136(a) were obtained. Accordingly, the above-identified application became abandoned on August 21, 2001.

The application file is being forwarded to the Office of Initial Patent Examination for further processing.

Telephone inquiries concerning this decision should be directed to Latrice Bond at (703) 308-6911.

Latrice Bond

Latrice Bond
Paralegal Specialist
Office of Petitions
Office of the Deputy Commissioner
for Patent Examination Policy

SPE RESPONSE FOR CERTIFICATE OF CORRECTION

Paper No.: _____

DATE : 1/9/07

TO SPE OF : ART UNIT 1733

SUBJECT : Request for Certificate of Correction for Appl. No.: 09/875632 Patent No.: 6607019

Please respond to this request for a certificate of correction within 7 days.

Please review the requested changes/corrections as shown in the **COCIN** document(s) in the IFW application image. No new matter should be introduced, nor should the scope or meaning of the claims be changed.

Please complete the response (see below) and forward the completed response to scanning using document code **COCX**.

HENRY RANDALL
Certificates of Correction Branch
703-308-9390 ext.

Thank You For Your Assistance

The request for issuing the above-identified correction(s) is hereby:

Note your decision on the appropriate box.

- ☑ **Approved** — All changes apply.
- ☐ **Approved in Part** — Specify below which changes **do not** apply.
- ☐ Denied — State the reasons for denial below.

Comments: _____

SPE

1733
Art Unit

UNITED STATES PATENT AND TRADEMARK OFFICE

Commissioner for Patents
United States Patent and Trademark Office
P.O. Box 1450
Alexandria, VA 22313-1450
www.uspto.gov

July 12, 2004

In re Application of	:	
Myong J. Lee et al.	:	
Serial Number : 09/875,661	:	WITHDRAWAL
Filed : June 5, 2001	:	FROM
For : FOOD HOLDING CABINET	:	ISSUE
ASSEMBLY	:	

The purpose of this communication is to inform you that the above-identified application is being withdrawn from issue pursuant to 37 CFR 1.313.

The application is being withdrawn to permit reopening of prosecution. The reasons therefore will be communicated to you by the examiner.

PTO records reveal that the issue fee has not been paid. If the issue fee has been submitted, the applicant may request a refund or may request that the fee be credited to a deposit account. However, applicant may wait until the application is either again found allowable or held abandoned. If the application is allowed, upon receipt of a new Notice of Allowance and Issue Fee Due, applicant may request that the previously submitted issue fee to applied toward payment of the issue fee in the amount identified on the new Notice of Allowance and Issue Fee Due. If the application is abandoned, applicant may request either a refund or a credit to a deposit account.

The application is being forwarded to the examiner for action.

Jacqueline M. Stone

Jacqueline M. Stone, Director
Technology Center 1700
Chemical and Materials Engineering

FROMMER LAWRENCE & HAUG
745 Fifth Avenue – 10th Floor
New York, NY 10151

cc:Allowed Files, Pk3-915

SPE RESPONSE FOR CERTIFICATE OF CORRECTION

DATE : 11-5-04

Paper No.: _

TO SPE OF : ART UNIT 2800

SUBJECT : Request for Certificate of Correction on Patent No.: 6712523

A response is requested with respect to the accompanying request for a certificate of correction.

Please complete this form and return with file, within 7 days to:
Certificates of Correction Branch - PK 3-915
Palm location 7580 - Tel. No. 305-8309

With respect to the change(s) requested, correcting Office and/or Applicant's errors, should the patent read as shown in the certificate of correction? No new matter should be introduced, nor should the scope or meaning of the claims be changed.

Please check Drawings

Thank You For Your Assistance

Certificates of Correction Branch

The request for issuing the above-identified correction(s) is hereby:
Note your decision on the appropriate box.

- ☑ Approved — All changes apply.
- ☐ Approved in Part — Specify below which changes do not apply.
- ☐ Denied — State the reasons for denial below.

Comments:

Corrections are acceptable

Exmr. Hyeon hmh

T Clark — SPE

2839 — Art Unit

PTOL-306 (REV. 7/03)

U.S. DEPARTMENT OF COMMERCE Patent and Trademar

UNITED STATES PATENT AND TRADEMARK OFFICE

CERTIFICATE OF CORRECTION

PATENT NO. : 6,712,523 B2 PAGE 1 of 1

DATED : MARCH 30, 2004

INVENTOR(S) : ZIMMEL

It is certified that error appears in the above-identified patent and that said Letters Patent is hereby corrected as shown below:

Front Page, [56] References Cited, U.S. Patent Documents: insert --2002/016180A1 08-2002 Takahashi et al.--in appropriate order.

Col. 8, line 43, claim 19: "between the inners ends" should read --between the inner ends--

Col. 10, line 25, claim 31: "between the inners ends" should read --between the inner ends--

Drawings: Sheet 5 of 11 (Fig. 5): Insert Fig. 5 which was omitted on issued patent.

FIG. 5

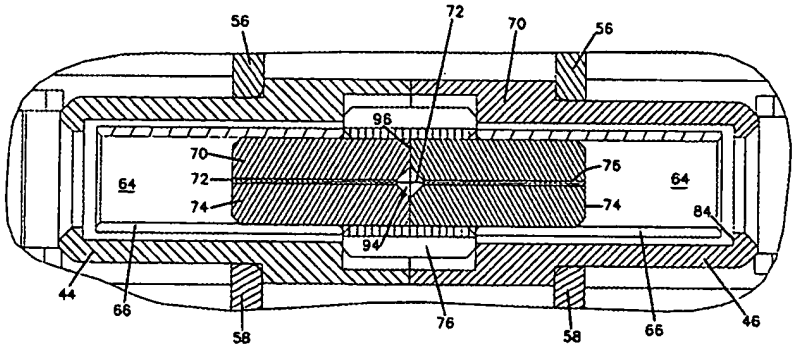

MAILING ADDRESS OF SENDER:
Merchant & Gould P.C.
Attn: Alan R. Stewart
P.O. Box 2903
Minneapolis, MN 55402-0903

PATENT NO. 6,712,523 B2

Docket No. 2316.1424US01

No. of add'l copies 0

23552
PATENT TRADEMARK OFFICE

JUN 24 2004

FORM 1050

UNITED STATES PATENT AND TRADEMARK OFFICE

Commissioner for Patents
United States Patent and Trademark Office
P.O. Box 1450
Alexandria, VA 22313-1450
www.uspto.gov

IBM CORPORATION, T.J. WATSON RESEARCH CENTER
P.O. BOX 218
YORKTOWN HEIGHTS, NY 10598

MAILED

APR 13 2010

OFFICE OF PETITIONS

In re Application of :
W. Nathaniel Mills III et al :
Application No. 09/875,722 :
Filed: June 6, 2001 :
Attorney Docket No. YOR920010212US2 :

ON PETITION

This is a decision on the petition filed January 28, 2010 under 37 CFR 1.137(b), to revive the above-identified application.

The petition is **GRANTED.**

The above-identified application became abandoned for failure to submit the Issue fee and Publication Fee in a timely manner in reply to the Notice of Allowance mailed September 18, 2009, which set a statutory period for reply of three (3) months. Accordingly, the above-identified application became abandoned on December 19, 2009.

The petition satisfies the conditions for revival pursuant to the provisions of 37 CFR 1.137(b) in that (1) the reply in the form of payment of the Issue fee and Publication Fee; (2) the petition fee; (3) the required statement of unintentional delay have been received. Accordingly, the issue fee is accepted as having been unintentionally delayed.

It is noted, the address given on the petition differs from the address of record. If appropriate, a change of address should be filed in accordance with MPEP 601.03. A courtesy copy of this decision is being mailed to the address given on the petition; however, the Office will mail all future correspondence solely to the address of record.

Telephone inquiries concerning this decision should be directed to the undersigned at (571) 272-3210. This matter is being referred to the Office of Data Management for further processing.

Irvin Dingle
Petitions Examiner
Office of Petitions

cc: William E. Lewis
Ryan Mason & Lewis, LLP
90 Forest Avenue
Locust Valley, NY 11560

UNITED STATES PATENT AND TRADEMARK OFFICE

Commissioner for Patents
United States Patent and Trademark Office
P.O. Box 1450
Alexandria, VA 22313-1450
www.uspto.gov

DARBY & DARBY
PROFESSIONAL CORPORATION
805 THIRD AVENUE
NEW YORK, NY 10022-7513

COPY MAILED

JUN 1 8 2004

OFFICE OF PETITIONS

In re Application of :
Shin Matsumi et al :
Application No. 09/875,742 :
Filed: June 6, 2001 :
Attorney Docket No. 4970/OJ423 :

ON PETITION

This is a decision on the petition, filed June 18, 2004, under 37 CFR 1.313(c)(2) to withdraw the above-identified application from issue after payment of the issue fee.

The petition is **GRANTED.**

The above-identified application is withdrawn from issue for consideration of a submission under 37 CFR 1.114 (request for continued examination). See 37 CFR 1.313(c)(2).

Petitioner is advised that the issue fee paid on April 22, 2004 in the above-identified application cannot be refunded. If, however, the above-identified application is again allowed, petitioner may request that it be applied towards the issue fee required by the new Notice of Allowance.[1]

The file does not indicate a change of address has been submitted, although the address given on the petition differs from the address of record. If appropriate, a change of address should be filed in accordance with MPEP 601.03. A courtesy copy of this decision is being mailed to the address given on the petition; however, the Office will mail all future correspondence solely to the address of record.

Telephone inquiries should be directed to the undersigned at (703) 305-8859.

---

[1] The request to apply the issue fee to the new Notice may be satisfied by completing and returning the new Issue Fee Transmittal Form PTOL-85(b), which includes the following language thereon: "Commissioner for Patents is requested to apply the Issue Fee and Publication Fee (if any) or re-apply any previously paid issue fee to the application identified above." Petitioner is advised that, whether a fee is indicated as being due or not, the Issue Fee Transmittal Form **must** be completed and timely submitted to avoid abandonment. Note the language in bold text on the first page of the Notice of Allowance and Fee(s) Due (PTOL-85).

The examiner of Technology Center AU 1753 will consider the request for continued examination under 37 CFR 1.114.

Karen Creasy

Karen Creasy
Petitions Examiner
Office of Petitions
Office of the Deputy Commissioner
for Patent Examination Policy

cc:
DARBY & DARBY P.C.
P.O. BOX 5257
NEW YORK, NY 10150-5257

UNITED STATES PATENT AND TRADEMARK OFFICE

COMMISSIONER FOR PATENTS
UNITED STATES PATENT AND TRADEMARK OFFICE
P.O. BOX 1450
ALEXANDRIA, VA 22313-1450
www.uspto.gov

Paper No. _____

Date : June 18, 2004

TO : Director, Office of Patent Publication

FROM : Office of the Deputy Commissioner
for Patent Examination Policy

SUBJECT : Withdrawal from Issue of

Applicant(s) :Shin Matsumi et al
Application No. :09/875,742
Filed :June 6, 2001

The above-identified application has been assigned Patent No. 6,753,468 and an issue date of June 22, 2004.

It is hereby directed that this application be withdrawn from issue at the request of the applicant.

Do not refund the issue fee.

The following erratum should be published in the Official Gazette if the above-identified application is published in the OG of June 22, 2004:

"All reference to Patent No. 6,753,468 to Shin Matsumi et al of Japan for SOLAR CELL MODULE, METHOD OF CONNECTING SOLAR CELL MODULE, METHOD OF INSTALLING SOLAR CELL MODULE AND METHOD OF GROUNDING SOLAR CELL MODULE in the Official Gazette of June 22, 2004 should be deleted since no patent was granted."

Karen Creasy

Karen Creasy
Petitions Examiner
Office of Petitions
Office of the Deputy Commissioner
for Patent Examination Policy

cc: Deneise Boyd, Crystal Park 2, Suite 1100 (FAX-308-5413)
Mary Louise McAskill, Crystal Park 3-910 (FAX 305-4372)
Niomi Farmer, Crystal Park 3-910 (FAX-305-4372)
Mary E. Johnson (Cookie), P/OCS, CM1-6D07
Duane Davis (CDS), CM1-6A07
Tamara Greene, Crystal Park 3-908

UNITED STATES PATENT AND TRADEMARK OFFICE

COMMISSIONER FOR PATENTS
UNITED STATES PATENT AND TRADEMARK OFFICE
P.O. BOX 1450
ALEXANDRIA, VA 22313-1450
www.uspto.gov

Paper No. _____

Date : June 18, 2004

TO : Director, Office of Patent Publication

FROM : Office of the Deputy Commissioner for Patent Examination Policy

SUBJECT : Withdrawal from Issue of

Applicant(s) :Shin Matsumi et al
Application No. :09/875,742
Filed :June 6, 2001

The above-identified application has been assigned Patent No. 6,753,468 and an issue date of June 22, 2004.

It is hereby directed that this application be withdrawn from issue at the request of the applicant.

Do not refund the issue fee.

The following erratum should be published in the Official Gazette if the above-identified application is published in the OG of June 22, 2004:

"All reference to Patent No. 6,753,468 to Shin Matsumi et al of Japan for SOLAR CELL MODULE, METHOD OF CONNECTING SOLAR CELL MODULE, METHOD OF INSTALLING SOLAR CELL MODULE AND METHOD OF GROUNDING SOLAR CELL MODULE in the Official Gazette of June 22, 2004 should be deleted since no patent was granted."

Karen Creasy

Karen Creasy
Petitions Examiner
Office of Petitions
Office of the Deputy Commissioner
for Patent Examination Policy

cc: Deneise Boyd, Crystal Park 2, Suite 1100 (FAX-308-5413)
Mary Louise McAskill, Crystal Park 3-910 (FAX 305-4372)
Niomi Farmer, Crystal Park 3-910 (FAX-305-4372)
Mary E. Johnson (Cookie), P/OCS, CM1-6D07
Duane Davis (CDS), CM1-6A07
Tamara Greene, Crystal Park 3-908

SPE RESPONSE FOR CERTIFICATE OF CORRECTION

Paper No.: _____

DATE : 06/22/06

TO SPE OF : ART UNIT 2624

SUBJECT : Request for Certificate of Correction for Appl. No.: **09/875748** Patent No.: **6944344**

Please respond to this request for a certificate of correction within 7 days.

Please review the requested changes/corrections as shown in the **COCIN** document(s) in the IFW application image. No new matter should be introduced, nor should the scope or meaning of the claims be changed.

Please complete the response (see below) and forward the completed response to scanning using document code **COCX**.

Angela Green
Certificates of Correction Branch
703.308.9380 ext. 122

Thank You For Your Assistance

The request for issuing the above-identified correction(s) is hereby:
Note your decision on the appropriate box.

☒ **Approved**	**All** changes apply.
☐ **Approved in Part**	Specify below which changes **do not** apply.
☐ **Denied**	State the reasons for denial below.

Comments: _____

MATTHEW C. BELLA
SUPERVISORY PATENT EXAMINER
TECHNOLOGY CENTER 2600

SPE **Art Unit** 2624

PTO/SB/44 (04-05)
Approved for use through 04/30/2007. OMB 0651-0033
U.S. Patent and Trademark Office; U.S. DEPARTMENT OF COMMERCE
Under the Paperwork Reduction Act of 1995, no persons are required to respond to a collection of information unless it displays a valid OMB control number.
(Also Form PTO-1050)

UNITED STATES PATENT AND TRADEMARK OFFICE
CERTIFICATE OF CORRECTION

PATENT NO. : 6,944,344

APPLICATION NO.: 09/875,748

ISSUE DATE : September 13, 2005

INVENTOR(S) : Taro IMAGAWA, et al.

It is certified that an error appears or errors appear in the above-identified patent and that said Letters Patent is hereby corrected as shown below:

In claim 1, in column 19, beginning at line 38 should read:

1. . . .
a calculation section for calculating a keyword credibility which indicates a probability of the keyword existing at a position, in the original document, which corresponds to the position of the portion in the character recognition result which matches the keyword, based on the credibility included in the index table; and
. . .

2. [CANCEL]

5. [REINSTATE] A search apparatus according to claim 1, further comprising an index table preparation section for preparing an index table, wherein:
the character recognition result includes a plurality of portions respectively corresponding to the characters in the original document,
each portion of the plurality of portions includes at least one character, and
the index table preparation section generates the index character string by combining the at least one character included in each of a plurality of continuous portions among the plurality of portions included in the character recognition result.

MAILING ADDRESS OF SENDER (Please do not use customer number below):

Howard I Sobelman, Snell & Wilmer L.L.P.
One Arizona Center, 400 E. Van Buren Street
Phoenix, AZ 85004-2202

This collection of information is required by 37 CFR 1.322, 1.323, and 1.324. The information is required to obtain or retain a benefit by the public which is to file (and by the USPTO to process) an application. Confidentiality is governed by 35 U.S.C. 122 and 37 CFR 1.14. This collection is estimated to take 1.0 hour to complete, including gathering, preparing, and submitting the completed application form to the USPTO. Time will vary depending upon the individual case. Any comments on the amount of time you require to complete this form and/or suggestions for reducing this burden, should be sent to the Chief Information Officer, U.S. Patent and Trademark Office, U.S. Department of Commerce, P.O. Box 1450, Alexandria, VA 22313-1450. DO NOT SEND FEES OR COMPLETED FORMS TO THIS ADDRESS. **SEND TO: Attention Certificate of Corrections Branch, Commissioner for Patents, P.O. Box 1450, Alexandria, VA 22313-1450.**

If you need assistance in completing the form, call 1-800-PTO-9199 and select option 2.

Privacy Act Statement

The **Privacy Act of 1974 (P.L. 93-579)** requires that you be given certain information in connection with your submission of the attached form related to a patent application or patent. Accordingly, pursuant to the requirements of the Act, please be advised that: (1) the general authority for the collection of this information is 35 U.S.C. 2(b)(2); (2) furnishing of the information solicited is voluntary; and (3) the principal purpose for which the information is used by the U.S. Patent and Trademark Office is to process and/or examine your submission related to a patent application or patent. If you do not furnish the requested information, the U.S. Patent and Trademark Office may not be able to process and/or examine your submission, which may result in termination of proceedings or abandonment of the application or expiration of the patent.

The information provided by you in this form will be subject to the following routine uses:

1. The information on this form will be treated confidentially to the extent allowed under the Freedom of Information Act (5 U.S.C. 552) and the Privacy Act (5 U.S.C 552a). Records from this system of records may be disclosed to the Department of Justice to determine whether disclosure of these records is required by the Freedom of Information Act.
2. A record from this system of records may be disclosed, as a routine use, in the course of presenting evidence to a court, magistrate, or administrative tribunal, including disclosures to opposing counsel in the course of settlement negotiations.
3. A record in this system of records may be disclosed, as a routine use, to a Member of Congress submitting a request involving an individual, to whom the record pertains, when the individual has requested assistance from the Member with respect to the subject matter of the record.
4. A record in this system of records may be disclosed, as a routine use, to a contractor of the Agency having need for the information in order to perform a contract. Recipients of information shall be required to comply with the requirements of the Privacy Act of 1974, as amended, pursuant to 5 U.S.C. 552a(m).
5. A record related to an International Application filed under the Patent Cooperation Treaty in this system of records may be disclosed, as a routine use, to the International Bureau of the World Intellectual Property Organization, pursuant to the Patent Cooperation Treaty.
6. A record in this system of records may be disclosed, as a routine use, to another federal agency for purposes of National Security review (35 U.S.C. 181) and for review pursuant to the Atomic Energy Act (42 U.S.C. 218(c)).
7. A record from this system of records may be disclosed, as a routine use, to the Administrator, General Services, or his/her designee, during an inspection of records conducted by GSA as part of that agency's responsibility to recommend improvements in records management practices and programs, under authority of 44 U.S.C. 2904 and 2906. Such disclosure shall be made in accordance with the GSA regulations governing inspection of records for this purpose, and any other relevant (*i.e.*, GSA or Commerce) directive. Such disclosure shall not be used to make determinations about individuals.
8. A record from this system of records may be disclosed, as a routine use, to the public after either publication of the application pursuant to 35 U.S.C. 122(b) or issuance of a patent pursuant to 35 U.S.C. 151. Further, a record may be disclosed, subject to the limitations of 37 CFR 1.14, as a routine use, to the public if the record was filed in an application which became abandoned or in which the proceedings were terminated and which application is referenced by either a published application, an application open to public inspection or an issued patent.
9. A record from this system of records may be disclosed, as a routine use, to a Federal, State, or local law enforcement agency, if the USPTO becomes aware of a violation or potential violation of law or regulation.

UNITED STATES PATENT AND TRADEMARK OFFICE

UNITED STATES DEPARTMENT OF COMMERCE
United States Patent and Trademark Office
Address: COMMISSIONER FOR PATENTS
P.O. Box 1450
Alexandria, Virginia 22313-1450
www.uspto.gov

K&L Gates LLP
P.O. Box 1135
CHICAGO, IL 60690

Mail Date: 04/20/2010

Applicant	: Olaf Vancura	: DECISION ON REQUEST FOR
Patent Number	: 7572182	: RECALCULATION of PATENT
Issue Date	: 08/11/2009	: TERM ADJUSTMENT IN VIEW
Appliction No	: 09/875,753	: OF WYETH
Filed	: 06/06/2001	:
		:

The Patentee's Request for Recalculation is **DISMISSED.**

This Request is deemed ineligible for consideration for one or more of the following reasons:

(A). The patent for which PTA recalculation is requested is either a design or reissue application or is a reexamination proceeding;

(B). The patent for which PTA recalculation is requested resulted from a utility or plant application filed under 35 USC 111(a) before May 29, 2000 and no CPA filed in the application on/after May 29, 2000;

(C). The patent for which PTA recalculation is requested resulted from an international application in which the international filing date was before May 29, 2000 and no CPA filed in the application on/after May 29, 2000;

(D). The patent for which PTA recalculation is requested issued on/after March 2, 2010;

(E). The Request for Recalculation was filed more than 180 days after the grant date of the patent and the request was not filed within two months of a dismissal of a request for reconsideration of the of the patent term under 37 CFR 1.705(d);

(F). The Request for Recalculation is not solely limited to USPTO pre-Wyeth interpretation of 35 U.S.C. 154(b)(2)(A);

or

(G). A civil action was filed pursuant to 35 U.S.C. 154(b)(4)(A)concerning the same patent at issue in this request.

Patentee may file a reply to this decision dismissing the Request for Recalculation. Patentee must file such reply within one month or thirty days, whichever is longer, of the mail date of the decision dismissing the Request for Recalculation. No fee is required if patentee is asserting in the reply that the dismissal for ineligibility is improper.

Patentee should use document code PET.OP if electronically filing a reply to this dismissal. If the USPTO finds that the request was improperly deemed ineligible, the USPTO will mail applicant a recalculation determination.

Patentee should be aware that in order to preserve the right to review in the United States District Court for the District of Columbia of the USPTO patent term adjustment determination, patentee must ensure that he or she also take the steps required under 35 U.S.C. 154(b)(4)(A). Nothing in the request for recalculation should be construed as providing an alternative time frame for commencing a civil action under 35 U.S.C. 154 (b)(4)(A).

Any questions concerning this decision should be directed to the Office of Patent Legal Administration at 571-272-7702.

UNITED STATES PATENT AND TRADEMARK OFFICE

UNITED STATES DEPARTMENT OF COMMERCE
United States Patent and Trademark Office
Address: COMMISSIONER FOR PATENTS
P.O. Box 1450
Alexandria, Virginia 22313-1450
www.uspto.gov

K&L Gates LLP
P.O. Box 1135
CHICAGO, IL 60690

Mail Date: 05/17/2010

Applicant : Olaf Vancura
Patent Number : 7572182
Issue Date : 08/11/2009
Application No : 09/875,753
Filed : 06/06/2001

: NOTICE CONCERNING IMPROPER
: DISMISSAL OF THE REQUEST
: FOR RECALCULATION OF
: PATENT TERM ADJUSTMENT
: IN VIEW OF WYETH

The United States Patent and Trademark Office (USPTO) discovered that in processing the recent recalculation decisions mailed in response to patentee's filed Request for Recalculation of Patent Term Adjustment in view of Wyeth, the USPTO mistakenly dismissed a small number of requests as ineligible. The dismissals involve requests that were filed on February 9-12, 2010, for patents that were granted on August 11, 2009. Any request that was filed on February 8, 2010 was properly deemed eligible for patent term adjustment (PTA) and was recalculated.

Patents meeting the above criteria were eligible because the USPTO was closed February 8-11, 2010, due to a snowstorm. See Closing of the United States Patent and Trademark Office from Monday February, 8, 2010, through Thursday, February 11, 2010, 1352 *Off. Gaz. Pat. Office* 146 (March 16, 2010). The Office considered each day from Monday, February 8, 2010, through Thursday, February 11, 2010, to be a "Federal holiday within the District of Columbia" under 35 U.S.C. § 21(b) and 37 CFR 1.6, 1.7, 1.9, 2.2(d), 2.195 and 2.196. Any actions that were due from Monday, February, 8, 2010, through Thursday, February 11, 2010, (or the preceding Saturday (February 6, 2010) or Sunday (February 7, 2010)) will be considered timely if the action was taken on the next succeeding business day on which the USPTO was open, which was February 12, 2010.

This notice **VACATES** the previous mailed decision in the patented file that deemed patentee ineligible for the request for recalculation. Patentee's request for recalculation is GRANTED.

The patent term adjustment has been determined to be **648** days. The USPTO will *sua sponte* issue a certificate of correction reflecting the amount of PTA days determined by the recalculation.

Prior to the issuance of the certificate of correction, the USPTO will afford patentee an opportunity to be heard and request reconsideration. Accordingly, patentee has **one month or thirty (30) days** from the mail date of this notice, whichever is longer, to file a request for reconsideration of this PTA calculation. See 35 U.S.C. § 154(b)(3)(B)(ii) and 37 CFR 1.322(a)(4).

Patentee should use document code PET.OP if electronically filing a request for reconsideration of this PTA calculation. The patentee must also include the information required by 37 CFR 1.705(b)(2) and the fee required by 37 CFR 1.18(e). If patentee does not file a timely request for reconsideration of this PTA calculation, including the information required by 37 CFR 1.705(b)(2) and the fee required by 37 1.18(e), the USPTO will issue a certificate of correction reflecting the PTA determination noted above.

Patentee should be aware that in order to preserve the right of review of the USPTO's PTA deterimation in the United States District Court for the District of Columbia, patentee must ensure that the steps required under 35 U.S.C. § 154(b)(4) are taken in a timely manner. Nothing in the request for recalculation should be construed as providing an alternative time frame for commencing a civil action under 35 U.S.C. § 154(b)(4).