UNITED STATES PATENT AND TRADEMARK OFFICE

Commissioner for Patents
United States Patent and Trademark Office
PO Box 1450
Arlington, VA 22313-1450
www.uspto.gov

Paper No. 6

Barnes & Thornburg
11 South Meridian Street
Indianapolis, IN 46204

COPY MAILED

SEP 1 5 2003

OFFICE OF PETITIONS

In re Application of :
Dean M. Ford :
Application No. 09/875,754 :
Filed: June 6, 2001 :
Attorney Docket No. 26896-66723 :

ON PETITION

This is a decision on the petition under 37 CFR 1.137(b), filed September 5, 2003, to revive the above-identified application.

The petition is **GRANTED**.

The above-identified application became abandoned for failure to reply in a timely manner to the Notice to File Missing Parts of Application (Notice) mailed August 8, 2001, which set a shortened statutory period for reply of . The Notice set a period for reply of two (2) months from the mail date of the Notice. No extensions of time under the provisions of 37 CFR 1.136(a) were obtained. Accordingly, the above-identified application became abandoned on October 9, 2001.

37 CFR 1.137(b)(3) requires a statement that the entire delay in filing the required reply from the due date for the reply until the filing of a grantable petition pursuant to 37 CFR 1.137(b) was unintentional. Since the statement contained in the instant petition varies from the language required by 37 CFR 1.137(b)(3), the statement is being construed as the statement required by 37 CFR 1.137(b)(3) and petitioner must notify the Office if this is **not** a correct interpretation of the statement.

Telephone inquiries concerning this decision should be directed to Latrice Bond at (703) 308-6911.

The application file is being forwarded to the Office of Initial Patent Examination for further processing.

Latrice Bond

Latrice Bond
Paralegal Specialist
Office of Petitions
Office of the Deputy Commissioner
for Patent Examination Policy

UNITED STATES PATENT AND TRADEMARK OFFICE

Commissioner for Patents
United States Patent and Trademark Office
P.O. Box 1450
Alexandria, VA 22313-1450
www.uspto.gov

COPY MAILED
NOV 2 0 2006
OFFICE OF PETITIONS

MORRISON & FOERSTER, LLP
555 WEST FIFTH STREET
SUITE 3500
LOS ANGELES CA 90013-1024

In re Application of	:	
Nakamura, et al.	:	
Application No.: 09/875,762	:	ON PETITION
Filed: June 5, 2001	:	
Attorney Docket No: 39303-20257.00	:	

This is in response to the petition under 37 CFR 1.137(b) April 3, 2006.

Any request for reconsideration of this decision must be submitted within TWO (2) MONTHS from the mail date of this decision. Extensions of time under 37 CFR 1.136(a) are permitted. The reconsideration request should include a cover letter entitled "Renewed Petition" under 37 CFR 1.137(b)."

This application became abandoned for failure to respond in a timely manner to the final Office action mailed August 23, 2005. The notice set a shortened statutory period for reply of three-months from its mailing date. Extensions of time were available pursuant to 37 CFR 1.136(a). A response was filed on February 28, 2006 (certificate of mailing dated February 23, 2006), along with a request for an extension of time within the third month. The application became abandoned on February 24, 2006. A Notice of Abandonment was mailed on April 4, 2006.

Effective December 1, 1997, the provisions of 37 CFR 1.137(b) now provide that where the delay in reply was unintentional, a petition may be filed to revive an abandoned application or a lapsed patent pursuant to 37 CFR 1.137(b). A grantable petition pursuant to 37 CFR 1.137(b) must be accompanied by:

(1) the required reply, unless previously filed. In a non-provisional application abandoned for failure to prosecute, the required reply may be met by the filing of a continuing application. In an application or patent, abandoned or lapsed for failure to pay the issue fee, or any portion thereof, the required reply must be the payment of the issue fee or any outstanding balance thereof.

(2) the petition fee as set forth in 37 CFR 1.17(m);

(3) a statement that the entire delay in filing the required reply from the due date for the reply until the filing of a grantable petition pursuant to 37 CFR 1.137(b) was unintentional. The Commissioner may require additional information where there is a question whether the delay was unintentional; and

(4) any terminal disclaimer (and fee set forth in 37 CFR 1.20(d)) required pursuant to 37 CFR 1.137(c).

The instant petition does not satisfy the requirements of item (1) above.

As to item (1) above, Examiner Rasha Al Aubaidi has determined that the response filed February 28, 2006, does not place the application in condition for allowance because:

1) The amendment raises issues that require further search and consideration.

2) Claims 55-62 were not present before examination.

3) Applicant did not present support in the specification for the new claims and limitations.

The petition must be dismissed because of the lack of a proper response to the final Office action. The renewed petition must accompanied by a proper response to the final Office action, which may include an amendment that places the application in condition for allowance or Request for Continued Examination under 37 CFR 1.114. Questions regarding the determination of the sufficiency of the reply filed February 28, 2006, should be directed to Examiner Al Aubaidi.

Further correspondence with respect to this matter should be addressed as follows:

By mail:

Mail Stop Petitions
Commissioner for Patents
United States Patent and Trademark Office
Box 1450
Alexandria, VA 22313-1450

By facsimile: (571) 273-8300
Attn: Office of Petitions

Telephone inquiries concerning this matter may be directed to the undersigned at (571) 272-3222.

Kenya A. McLaughlin
Petitions Attorney
Office of Petitions

UNITED STATES PATENT AND TRADEMARK OFFICE

Commissioner for Patents
United States Patent and Trademark Office
P.O. Box 1450
Alexandria, VA 22313-1450
www.uspto.gov

MORRISON & FOERSTER, LLP
555 WEST FIFTH STREET
SUITE 3500
LOS ANGELES, CA 90013-1024

COPY MAILED

JAN 18 2007

OFFICE OF PETITIONS

In re Application of

Nakamura, et al. :

Application No. 09/875,762

: DECISION ON PETITION

Filed: June 5, 2001

:

Attorney Docket No. 39303-20257.00

This is a decision on the renewed petition under 37 CFR 1.137(b), filed December 14, 2006, to revive the above-identified application.

The renewed petition is **GRANTED**.

The above-cited application became abandoned for failure to file a proper reply in a timely manner to the final Office action mailed August 23, 2005, which set a shortened statutory period for reply of three (3) months from its mailing date. A response was filed on February 28, 2006, along with a request for an extension of time within the third month. The application became abandoned on February 24, 2006. A Notice of Abandonment was mailed on April 4, 2006. A petition under 37 CFR 1.137(b) was filed on April 3, 2006, and dismissed by a decision mailed November 20, 2006.

The Request for Continued Examination filed December 14, 2006, is noted and made of record.

Deposit account 03-1952 will be refunded $1500.00 for the petition fee as it was paid twice—once with the petition filed April 3, 2006, and again with the instant petition.

The application is being forwarded to Technology Center 2600, GAU 2642 for further processing.

Telephone inquiries concerning this decision should be directed to the undersigned at (571) 272-3222.

Kenya A. McLaughlin
Petitions Attorney
Office of Petitions

UNITED STATES PATENT AND TRADEMARK OFFICE

COMMISSIONER FOR PATENTS
UNITED STATES PATENT AND TRADEMARK OFFICE
P.O. BOX 1450
ALEXANDRIA, VA 22313-1450
www.uspto.gov

MAY 20 2004

#14

GREENLEE WINNER AND SULLIVAN P C
5370 MANHATTAN CIRCLE
SUITE 201
BOULDER CO 80303

In re Application of	:
Scott E. Denmark et al	:
Serial No.: 09/875,777	: PETITION DECISION
Filed: June 6, 2001	:
Attorney Docket No.: 98-99	:

This is in response to the petition under 37 CFR 1.181, filed January 20, 2004, for withdrawal of abandonment of the above identified application based on filing of a timely reply. The delay in acting on this petition is regretted.

A review of the file history shows that the examiner mailed an Office action to applicants on May 20, 2003, setting a three month shortened statutory period for. When no reply was received a Notice of Abandonment was mailed to applicants on January 14, 2004. Applicants state that they replied on November 20, 2003, and provide an Office date stamped postcard and USPS Express Mail Delivery confirmation as evidence that the Office received the reply. The reply has not been correlated with the file and the copy supplied with the petition will be utilized. In view of the timely reply the Notice of Abandonment was mailed in error and is withdrawn and the application is restored to pending status with the mailing of this decision

The petition is **GRANTED**.

The application will be forwarded to the examiner for further action.

Should there be any questions about this decision please contact William R. Dixon, Jr., by letter addressed to Director, TC 1600, at the address listed above, or by telephone at 571-272-0519 or by facsimile sent to the general Office facsimile number 703-872-9306.

Bruce M. Kisliuk
Director, Technology Center 1600

UNITED STATES PATENT AND TRADEMARK OFFICE

COMMISSIONER FOR PATENTS
UNITED STATES PATENT AND TRADEMARK OFFICE
P.O. BOX 1450
ALEXANDRIA, VA 22313-1450
www.uspto.gov

JJGJr: 09-03

Paper No: 19

APPLIED MATERIALS, INC.
2881 SCOTT BLVD. M/S 2061
SANTA CLARA CA 95050

COPY MAILED

SEP 3 0 2003

OFFICE OF PETITIONS

In re Application of:	:	ON PETITION
Hosokawa, et al.	:	
Filed: 6 June, 2001	:	
Application No. 09/875,816	:	
Docket No.: 003123-P-01	:	

This is a decision on the petition filed herein on 15 August, 2003, under 37 C.F.R. §1.137(a) to revive the above-identified application, and in light of the allegations (alleged proper/timely filing) considered as a petition to withdraw the holding of abandonment under 37 C.F.R. §1.181.

For the reasons set forth below, the petition:

- the petition as considered under 37 C.F.R. §1.181 to withdraw the holding of abandonment is **DISMISSED**; and
- under 37 C.F.R. §1.137(a) is **DISMISSED**.

NOTES:

(1) Any petition (and fee) for reconsideration of this decision under 37 C.F.R. §1.137(a) (as to unavoidable delay) or an alternative request for relief under 37 C.F.R. §1.137(b)[1] (as to unintentional delay) must be submitted within two (2) months from the mail date of this decision. Extensions of time under 37 C.F.R.

[1] Effective December 1, 1997, the provisions of 37 C.F.R. §1.137(b) now provide that where the delay in reply was unintentional, a petition may be filed to revive an abandoned application or a lapsed patent pursuant to 37 C.F.R. §1.137(b). a grantable petition filed under the provisions of 37 C.F.R. §1.137(b) must be accompanied by:
(1) the required reply, unless previously filed. In a nonprovisional application abandoned for failure to prosecute, the required reply may be met by the filing of a continuing application. In an application or patent, abandoned or lapsed for failure to pay the issue fee or any portion thereof, the required reply must be the payment of the issue fee or any outstanding balance thereof.
(2) the petition fee as set forth in 37 C.F.R. §1.17(m);
(3) a statement that the entire delay in filing the required reply from the due date for the reply until the filing of a grantable petition pursuant to 37 C.F.R. §1.137(b) was unintentional. The Commissioner may require additional information where there is a question whether the delay was unintentional; and
(4) any terminal disclaimer (and fee set forth in 37 C.F.R. §1.20(d)) required pursuant to 37 C.F.R. §1.137(c). (Emphasis supplied.)

§1.136(a) are permitted. The reconsideration request should include a cover letter entitled "Renewed Petition under 37 C.F.R. §1.137(a)"; and/or "Petition under 37 C.F.R. §1.137(b)";

(2) Thereafter, there will be no further reconsideration of this matter.

BACKGROUND

The record indicates that:

- Petitioner failed to reply timely and properly to the Notice of Allowance and Issue Fee Due mailed (with the Notice of Allowability) on 29 January, 2003, and due (under a non-extendable statutory deadline) on or before 29 April, 2003;
- Petitioner Guy V. Manning (Reg. No. 34,868) recites that the reply in the form of a request for continued examination (RCE) with fee and submission, was submitted via US Postal Service (USPS) Express Mail on 21 April, 2003, however, Petitioner submits no documentation (e.g., copies of the USPS Express Mail label and the transmittal form evidencing the Express Mail label number) in support of the allegation of timely transmittal;
- the application was deemed abandoned after midnight 29 April, 2003;
- the Notice of Abandonment was mailed on 12 June, 2003.
- as indicated above, Petitioner filed the instant petition, but did so with a check for an insufficient fee ($100.00, rather than $110.00), and while he authorized crediting fees to Deposit Account 50-0466, he failed to authorize the underpayment to be charged against the account;
- Petitioner has filed a reply to the 29 January, 2003 Notice of Allowance in the form of an RCE with fee and submission (in the form of an IDS).

STATUTES, REGULATIONS AND ANALYSIS

Congress has authorized the Commissioner to "revive an application if the delay is shown to the

satisfaction of the Commissioner to have been "unavoidable." 35 U.S.C. §133 (1994).[2]

The regulations at 37 C.F.R. §1.137(a) and (b) set forth the requirements for a petitioner to revive a previously unavoidably or unintentionally, respectively, abandoned application under this congressional grant of authority. The language of 35 U.S.C. §133 and 37 C.F.R. §1.137(a) is clear, unambiguous, and without qualification: the delay in tendering the reply to the outstanding Office action, as well as filing the first petition seeking revival, must have been unavoidable for the reply now to be accepted on petition.[3]

Delays in responding properly raise the question whether delays are unavoidable.[4] Where there is a question whether the delay was unavoidable, Petitioners must meet the burden of establishing that the delay was unavoidable within the meaning of 35 U.S.C. §133 and 37 C.F.R. §1.137(a).[5] And the Petitioner must be diligent in attending to the matter.[6] Failure to do so does not constitute the care required under Pratt, and so cannot satisfy the test for diligence and due care.

(By contrast, unintentional delays are those that do not satisfy the very strict statutory and regulatory requirements of unavoidable delay, and also, by definition, are not intentional.[7]))

Allegations as to the Request to Withdraw
the Holding of Abandonment and
the Petition Alleging Unavoidable Delay

Petitioner contends that he submitted the reply. However, as Petitioner himself acknowledges, the reply was not received and Petitioner has provided no documentary support for the allegation of timely submission (as discussed above).

---

[2] 35 U.S.C. §133 provides:
35 U.S.C. §133 Time for prosecuting application.
Upon failure of the applicant to prosecute the application within six months after any action therein, of which notice has been given or mailed to the applicant, or within such shorter time, not less than thirty days, as fixed by the Commissioner in such action, the application shall be regarded as abandoned by the parties thereto, unless it be shown to the satisfaction of the Commissioner that such delay was unavoidable.

[3] Therefore, by example, an unavoidable delay in the payment of the Filing Fee might occur if a reply is shipped by the US Postal Service, but due to catastrophic accident, the delivery is not made.

[4] See: *Changes to Patent Practice and Procedure; Final Rule Notice*, 62 *Fed. Reg.* at 53158-59 (October 10, 1997), 1203 *Off. Gaz. Pat. Office* at 86-87 (October 21, 1997).

[5] See: In re Application of G, 11 USPQ2d 1378, 1380 (Comm'r Pats. 1989).

[6] See: Diligence in Filing Petitions to Revive and Petitions to Withdraw the Holding of Abandonment, 1124 Off. Gaz. Pat. Office 33 (March 19, 1991). It was and is Petitioner's burden to exercise diligence in seeking either to have the holding of abandonment withdrawn or the application revived. See 1124 Off. Gaz. Pat. Office supra.

[7] Therefore, by example, an unintentional delay in the reply might occur if the reply and transmittal form are to be prepared for shipment by the US Postal Service, but other pressing matters distract one's attention and the mail is not timely deposited for shipment.

Petitioner has failed to submit documentation in support of his allegation of timely submission consistent with the rules of practice before the Office. Applicants and practitioners who fail to use the rules and procedures set out by the Office to benefit their practice before it, not surprisingly also fail to gain those very benefits.

The courts have determined the construct for properly supporting a petition seeking withdrawal of a holding of abandonment.[8]

Petitioner has alleged but failed to evidence that the Office improperly deemed the instant application abandoned because the necessary reply was timely submitted under the rules and/or received, and thus fails to satisfy the requirements for having the holding of abandonment withdrawn.

A delay is not "unavoidable" when an applicant simply fails to file properly and timely the required reply and so permits the maximum extendable statutory period for reply to expire.[9]

In determining if a delay was unavoidable, decisions on reviving abandoned applications have adopted the standard of the reasonably prudent person acting in their most important business matters.[10]

In addition, decisions on revival are made on a "case-by-case basis, taking all the facts and circumstances into account."[11]

Petitioner simply failed to file a timely and proper response to the Notice of Allowance and Issue Fee Due.

Such practice clearly does not satisfy the Pratt requirements of diligence in attending to one's most important business affairs.

Therefore, Petitioner fails to satisfy the showing as required under 37 C.F.R. §1.137(a).

Accordingly, Petitioner has failed to establish to the satisfaction of the Commissioner that the

---

[8] See: Delgar v. Schulyer, 172 USPQ 513 (D.D.C. 1971).

[9] See MPEP 711.03(c)(III)(C)(2).

[10] Ex parte Pratt, 1887 Dec. Comm'r Pat. 31, 32-33 (Comm'r Pat. 1887) (the term "unavoidable" "is applicable to ordinary human affairs, and requires no more or greater care or diligence than is generally used and observed by prudent and careful men in relation to their most important business"); In re Mattullath, 38 App. D.C. 497, 514-15 (D.C. Cir. 1912); Ex parte Henrich, 1913 Dec. Comm'r Pat. 139, 141 (Comm'r Pat. 1913).

[11] Smith v. Mossinghoff, 671 F.2d 533, 538, 213 USPQ 977, 982 (D.C. Cir. 1982).

delay was "unavoidable" within the meaning of 37 C.F.R. §1.137.[12]

Petitioner also has failed to pay the required fee.

A copy of the Fee Schedule (effective 1 October, 2003) is enclosed.

CONCLUSION

Because Petitioner failed to satisfy the burdens set forth in Delgar v. Schulyer, the petition under 37 C.F.R. §1.181 must be and hereby is **dismissed**.

Moreover, the circumstances of this application do not demonstrate as of this writing that the delay in filing the first petition was/is within the statutory and regulatory meaning of unavoidable delay--and the instant petition fails to satisfy the "showing" requirement as to relief sought and the "fee" requirement of the regulations.

Therefore, in the absence of those requirements, the petition herein 37 C.F.R. §1.137(a) must be and hereby is **dismissed**.

ALTERNATIVE VENUE

It appears that Petitioner is unable to make a showing of unavoidable delay surpassing that tendered heretofore, and, therefore, Petitioner's only alternative to irretrievable abandonment likely is to file a petition and fee as set forth at NOTE 1, above at page 2, under 37 C.F.R. §1.137(b), and state therein that "the entire delay in filing the required reply from the due date for the reply until the filing of a grantable petition pursuant to 37 C.F.R. §1.137(b) was unintentional."

Thus, Petitioner may wish to supplement his petition to plead alternatively under 37 C.F.R. §1.137(b) wherein the "showing " burden is much less onerous. A copy of the form is enclosed.

Petitioner is cautioned that failure to submit such a petition 37 C.F.R. §1.137(b) timely may be viewed as intentional delay and an absolute bar to revival.

Further correspondence with respect to this matter should be addressed as follows:

---

[12] See Application of G, 11 USPQ2d at 1380; In re Application of S, Id.

By mail: (Effective 1 May, 2003)[13]
Commissioner for Patents
P.O. Box 1450
Alexandria, VA 22313-1450

By FAX: (703) 308-6916
ATTN.: Office of Petitions

By hand: Crystal Plaza Four, Suite CP4-3C23
2201 South Clark Place
Arlington, VA 22202

Telephone inquiries concerning this decision may be directed to the undersigned at (703) 305-9199.

John J. Gillon, Jr.
Senior Attorney
Office of Petitions

Encl: Fee Schedule

[13] To determine the appropriate addresses for other subject-specific correspondence, refer to the USPTO Web site at www.uspto.gov.

UNITED STATES PATENT AND TRADEMARK OFFICE

COMMISSIONER FOR PATENTS
UNITED STATES PATENT AND TRADEMARK OFFICE
P.O. BOX 1450
ALEXANDRIA, VA 22313-1450
www.uspto.gov

JJGJr: 12-03

Paper No: 24

COPY MAILED

DEC 16 2003

OFFICE OF PETITIONS

APPLIED MATERIALS, INC.
2881 SCOTT BLVD. M/S 2061
SANTA CLARA CA 95050

ON PETITION

In re Application of:
Hosokawa, et al.
Filed: 6 June, 2001
Application No. 09/875,816
Docket No.: ~~003123-P-01~~

This is a decision on the petition filed herein on 1 December, 2003, under 37 C.F.R. §1.181 requesting withdrawal of the holding of abandonment..

For the reasons set forth below, the petition the petition as considered under 37 C.F.R. §1.181 to withdraw the holding of abandonment is **DISMISSED**.

BACKGROUND

The record indicates that:

- Petitioner failed to reply timely and properly to the Notice of Allowance and Issue Fee Due mailed (with the Notice of Allowability) on 29 January, 2003, and due (under a non-extendable statutory deadline) on or before 29 April, 2003;

- the original petition herein, filed on 15 August, 2003, was dismissed on 30 September, 2003, for failure to support the showing required for withdrawal of the holding of abandonment or to satisfy a showing of unavoidable delay--principally for failing to provide documentary evidence which would satisfy the showing requirements;

- Petitioner Guy V. Manning (Reg. No. 34,868) explains that the reply in the form of a request for continued examination (RCE) with fee and submission was transmitted via US Postal Service (USPS) Express Mail on 21 April, 2003, and shows a record of the USPS Express Mail package alleged to have contained the documents) listed (USPS

Express Mail No. EL 949764533 US) as prepared for deposit in the drop box at a date and time as previously alleged;

- however, as is clear from the Petitioner's showing, whether due to Petitioner's error or that of the USPS, the documents were not accepted by the USPS or delivered to the Office in the time frame required for Petitioner's reply to be timely;
- the application was deemed abandoned after midnight 29 April, 2003;
- the Notice of Abandonment was mailed on 12 June, 2003;
- according to a USPS Track and Confirm document submitted by Petitioner, the package bearing USPS Express Mail No. EL 949764533 US was accepted in Fort Worth, Texas, on 12 August, 2003, and delivered at the Office on 14 August, 2003;
- Petitioner has filed a reply to the 29 January, 2003 Notice of Allowance in the form of an RCE with fee and submission (in the form of an IDS).

STATUTES, REGULATIONS AND ANALYSIS

Congress has authorized the Commissioner to "revive an application if the delay is shown to the satisfaction of the Commissioner to have been "unavoidable." 35 U.S.C. §133 (1994).[1]

The regulations at 37 C.F.R. §1.137(a) and (b) set forth the requirements for a petitioner to revive a previously unavoidably or unintentionally, respectively, abandoned application under this congressional grant of authority. The language of 35 U.S.C. §133 and 37 C.F.R. §1.137(a) is clear, unambiguous, and without qualification: the delay in tendering the reply to the outstanding Office action, as well as filing the first petition seeking revival, must have been unavoidable for the reply now to be accepted on petition.[2]

Delays in responding properly raise the question whether delays are unavoidable.[3] Where there is

---

[1] 35 U.S.C. §133 provides:
35 U.S.C. §133 Time for prosecuting application.
Upon failure of the applicant to prosecute the application within six months after any action therein, of which notice has been given or mailed to the applicant, or within such shorter time, not less than thirty days, as fixed by the Commissioner in such action, the application shall be regarded as abandoned by the parties thereto, unless it be shown to the satisfaction of the Commissioner that such delay was unavoidable.

[2] Therefore, by example, an unavoidable delay in the payment of the Filing Fee might occur if a reply is shipped by the US Postal Service, but due to catastrophic accident, the delivery is not made.

[3] See: *Changes to Patent Practice and Procedure; Final Rule Notice*, 62 *Fed. Reg.* at 53158-59 (October 10, 1997), 1203 *Off. Gaz. Pat. Office* at 86-87 (October 21, 1997).

a question whether the delay was unavoidable, Petitioners must meet the burden of establishing that the delay was unavoidable within the meaning of 35 U.S.C. §133 and 37 C.F.R. §1.137(a).[4] And the Petitioner must be diligent in attending to the matter.[5] Failure to do so does not constitute the care required under Pratt, and so cannot satisfy the test for diligence and due care.

(By contrast, unintentional delays are those that do not satisfy the very strict statutory and regulatory requirements of unavoidable delay, and also, by definition, are not intentional.[6]))

Allegations as to the Request to Withdraw
the Holding of Abandonment

Petitioner contends that he submitted the reply. However, as Petitioner himself acknowledges, the reply was not received and Petitioner clearly can provide no documentary support for an allegation of error by the Office.

The courts have determined the construct for properly supporting a petition seeking withdrawal of a holding of abandonment.[7] Petitioner has alleged but failed to evidence that the Office improperly deemed the instant application abandoned, and thus fails to satisfy the requirements for having the holding of abandonment withdrawn.

CONCLUSION

Because Petitioner failed to satisfy the burdens set forth in Delgar v. Schulyer, the petition under 37 C.F.R. §1.181 must be and hereby is **dismissed**.

The file will be retained in the Office of Petitions for consideration of an alternative plea by Petitioner.

---

[4] See: In re Application of G, 11 USPQ2d 1378, 1380 (Comm'r Pats. 1989).

[5] See: Diligence in Filing Petitions to Revive and Petitions to Withdraw the Holding of Abandonment, 1124 Off. Gaz. Pat. Office 33 (March 19, 1991). It was and is Petitioner's burden to exercise diligence in seeking either to have the holding of abandonment withdrawn or the application revived. See 1124 Off. Gaz. Pat. Office supra.

[6] Therefore, by example, an unintentional delay in the reply might occur if the reply and transmittal form are to be prepared for shipment by the US Postal Service, but other pressing matters distract one's attention and the mail is not timely deposited for shipment.

[7] See: Delgar v. Schulyer, 172 USPQ 513 (D.D.C. 1971).

Telephone inquiries concerning this decision may be directed to the undersigned at (703) 305-9199.

John J. Gillon, Jr.
Senior Attorney
Office of Petitions

UNITED STATES PATENT AND TRADEMARK OFFICE

COMMISSIONER FOR PATENTS
UNITED STATES PATENT AND TRADEMARK OFFICE
P.O. BOX 1450
ALEXANDRIA, VA 22313-1450
www.uspto.gov

JJGJr: 12-03

Paper No: 26

COPY MAILED
DEC 1 9 2003
OFFICE OF PETITIONS

APPLIED MATERIALS, INC.
2881 SCOTT BLVD. M/S 2061
SANTA CLARA CA 95050

ON PETITION

In re Application of:
Hosokawa, et al.
Filed: 6 June, 2001
Application No. 09/875,816
Docket No.: ~~003123-P-01~~

This is a decision on the petition filed herein on 1 December, 2003, under 37 C.F.R. §1.137(a) to revive from abandonment due to unavoidable delay.

For the reasons set forth below, the petition the petition as considered under 37 C.F.R. §1.137(a) is **GRANTED**.

BACKGROUND

The record indicates that:

- Petitioner failed to reply timely and properly to the Notice of Allowance and Issue Fee Due mailed (with the Notice of Allowability) on 29 January, 2003, and due (under a non-extendable statutory deadline) on or before 29 April, 2003;

- the original petition herein, filed on 15 August, 2003, was dismissed on 30 September, 2003, for failure to support the showing required for withdrawal of the holding of abandonment or to satisfy a showing of unavoidable delay--principally for failing to provide documentary evidence which would satisfy the showing requirements, and a renewed petition was filed on 1 December and dismissed on 16 December, 2003, for failing to satisfy the showing requirements;

- Petitioner Guy V. Manning (Reg. No. 34,868) explains that the reply in the form of a request for continued examination (RCE) with fee and submission was transmitted via

US Postal Service (USPS) Express Mail on 21 April, 2003, and shows a record of the USPS Express Mail package alleged to have contained the documents) listed (USPS Express Mail No. EL 949764533 US) as prepared for deposit in the drop box at a date and time as previously alleged, however, as is clear from the Petitioner's showing, whether due to Petitioner's error or that of the USPS, the documents were not formally accepted by the USPS or delivered to the Office in the time frame required for Petitioner's reply to be timely;

- the application was deemed abandoned after midnight 29 April, 2003;
- the Notice of Abandonment was mailed on 12 June, 2003;
- according to a USPS Track and Confirm document submitted by Petitioner, the parcel bearing USPS Express Mail No. EL 949764533 US was accepted in Fort Worth, Texas, on 12 August, 2003, and delivered at the Office on 14 August, 2003;
- with a copy of his office Express Mail log, Petitioner evidences that the parcel bearing USPS Express Mail No. EL 949764533 US was prepared in his office for mailing on 21 April, 2003, and that other Express Mail parcels subsequently logged were timely accepted and delivered by the USPS;
- Petitioner has filed a reply to the 29 January, 2003 Notice of Allowance in the form of an RCE with fee and submission (in the form of an IDS).

STATUTES, REGULATIONS AND ANALYSIS

Congress has authorized the Commissioner to "revive an application if the delay is shown to the satisfaction of the Commissioner to have been "unavoidable." 35 U.S.C. §133 (1994).[1]

The regulations at 37 C.F.R. §1.137(a) and (b) set forth the requirements for a petitioner to revive a previously unavoidably or unintentionally, respectively, abandoned application under this congressional grant of authority. The language of 35 U.S.C. §133 and 37 C.F.R. §1.137(a) is clear, unambiguous, and without qualification: the delay in tendering the reply to the outstanding Office action, as well as filing the first petition seeking revival, must have been unavoidable for

[1] 35 U.S.C. §133 provides:
35 U.S.C. §133 Time for prosecuting application.
Upon failure of the applicant to prosecute the application within six months after any action therein, of which notice has been given or mailed to the applicant, or within such shorter time, not less than thirty days, as fixed by the Commissioner in such action, the application shall be regarded as abandoned by the parties thereto, unless it be shown to the satisfaction of the Commissioner that such delay was unavoidable.

the reply now to be accepted on petition.[2]

Delays in responding properly raise the question whether delays are unavoidable.[3] Where there is a question whether the delay was unavoidable, Petitioners must meet the burden of establishing that the delay was unavoidable within the meaning of 35 U.S.C. §133 and 37 C.F.R. §1.137(a).[4] And the Petitioner must be diligent in attending to the matter.[5] Failure to do so does not constitute the care required under Pratt, and so cannot satisfy the test for diligence and due care.

(By contrast, unintentional delays are those that do not satisfy the very strict statutory and regulatory requirements of unavoidable delay, and also, by definition, are not intentional.[6]))

Allegations as to Petition to Revive
Alleging Unavoidable Delay

Petitioner has submitted copies of his office documents evidencing his effort to satisfy a showing of diligence as required by Pratt.

CONCLUSION

Petitioner has satisfied the burdens, and the petition under 37 C.F.R. §1.137(a) is **granted**. Further, a review of the record indicates that Petitioner was charged twice for the fee for the filing of an RCE--the overcharge ($750.00) will be refunded via Treasury check.

The file will be retained in the Office of Petitions for consideration of an alternative plea by Petitioner.

---

[2] Therefore, by example, an unavoidable delay in the payment of the Filing Fee might occur if a reply is shipped by the US Postal Service, but due to catastrophic accident, the delivery is not made.

[3] See: *Changes to Patent Practice and Procedure; Final Rule Notice*, 62 *Fed. Reg.* at 53158-59 (October 10, 1997), 1203 *Off. Gaz. Pat. Office* at 86-87 (October 21, 1997).

[4] See: In re Application of G, 11 USPQ2d 1378, 1380 (Comm'r Pats. 1989).

[5] See: Diligence in Filing Petitions to Revive and Petitions to Withdraw the Holding of Abandonment, 1124 Off. Gaz. Pat. Office 33 (March 19, 1991). It was and is Petitioner's burden to exercise diligence in seeking either to have the holding of abandonment withdrawn or the application revived. See 1124 Off. Gaz. Pat. Office supra.

[6] Therefore, by example, an unintentional delay in the reply might occur if the reply and transmittal form are to be prepared for shipment by the US Postal Service, but other pressing matters distract one's attention and the mail is not timely deposited for shipment.

Telephone inquiries concerning this decision may be directed to the undersigned at (703) 305-9199.

John J. Gillon, Jr.
Senior Attorney
Office of Petitions

UNITED STATES PATENT AND TRADEMARK OFFICE

COMMISSIONER FOR PATENTS
UNITED STATES PATENT AND TRADEMARK OFFICE
P.O. BOX 1450
ALEXANDRIA, VA 22313-1450
www.uspto.gov

JJGJr: 12-03

Paper No: 27

COPY MAILED

DEC 2 2 2003

OFFICE OF PETITIONS

APPLIED MATERIALS, INC.
2881 SCOTT BLVD. M/S 2061
SANTA CLARA CA 95050

ON PETITION

In re Application of:
Hosokawa, et al.
Filed: 6 June, 2001
Application No. 09/875,816
Docket No.: 003123-P-01

This is a decision on the petition filed herein on 1 December, 2003, under 37 C.F.R. §1.137(b) to revive from abandonment due to unintentional delay.

For the reasons set forth below, the petition the petition as considered under 37 C.F.R. §1.137(b) is **DISMISSED as moot** and the petition fee ($1,330.00) is refunded via Treasury check.

BACKGROUND

The record indicates that:

- Petitioner failed to reply timely and properly to the Notice of Allowance and Issue Fee Due mailed (with the Notice of Allowability) on 29 January, 2003, and due (under a non-extendable statutory deadline) on or before 29 April, 2003;

- the original petition herein, filed on 15 August, 2003, was dismissed on 30 September, 2003, for failure to support the showing required for withdrawal of the holding of abandonment or to satisfy a showing of unavoidable delay--principally for failing to provide documentary evidence which would satisfy the showing requirements, as was a subsequent petition under 37 C.F.R. §1.181 on 15 December, 2003;

- Petitioner Guy V. Manning (Reg. No. 34,868) explains that the reply in the form of a request for continued examination (RCE) with fee and submission was transmitted via US Postal Service (USPS) Express Mail on 21 April, 2003, and shows a record of the

USPS Express Mail package alleged to have contained the documents) listed (USPS Express Mail No. EL 949764533 US) as prepared for deposit in the drop box at a date and time as previously alleged, however, as is clear from the Petitioner's showing, whether due to Petitioner's error or that of the USPS, the documents were not formally accepted by the USPS or delivered to the Office in the time frame required for Petitioner's reply to be timely;

- the application was deemed abandoned after midnight 29 April, 2003;
- the Notice of Abandonment was mailed on 12 June, 2003;
- according to a USPS Track and Confirm document submitted by Petitioner, the parcel bearing USPS Express Mail No. EL 949764533 US was accepted in Fort Worth, Texas, on 12 August, 2003, and delivered at the Office on 14 August, 2003;
- in a prior petition alleging unavoidable delay, granted on 19 December, 2003, Petitioner evidenced with a copy of his office Express Mail log, that the parcel bearing USPS Express Mail No. EL 949764533 US was prepared in his office for mailing on 21 April, 2003, and that other Express Mail parcels subsequently logged were timely accepted and delivered by the USPS; and Petitioner filed a reply to the 29 January, 2003 Notice of Allowance in the form of an RCE with fee and submission (in the form of an IDS).

CONCLUSION

The petition under 37 C.F.R. §1.137(a) is **dismissed as moot**.

The file will be forwarded to Technology Center 1700 for further processing.

Telephone inquiries concerning this decision may be directed to the undersigned at (703) 305-9199.

John J. Gillon, Jr.
Senior Attorney
Office of Petitions

UNITED STATES PATENT AND TRADEMARK OFFICE

Commissioner for Patents
United States Patent and Trademark Office
P.O. Box 1450
Alexandria, VA 22313-1450
www.uspto.gov

FITZPATRICK CELLA HARPER & SCINTO
30 ROCKEFELLER PLAZA
NEW YORK NY 10112-3801

COPY MAILED

JAN 24 2006

OFFICE OF PETITIONS

In re	:
Nobuyuki Tonegawa	: DECISION ON APPLICATION
Application No. 09/875,856	: FOR PATENT TERM ADJUSTMENT
Filed: June 8, 2001	: AND
Patent No. 6,952,721 B2	: NOTICE OF INTENT TO ISSUE
Issued: October 4, 2005	: CERTIFICATE OF CORRECTION

This decision is in response to the "COMMENTS ON DETERMINATION OF PATENT TERM ADJUSTMENT", filed December 16, 2005, notifying the Office of an error in Patentees' favor in the determination of patent term adjustment under 35 U.S.C. § 154(b).

The request for correction of the initial determination of patent term adjustment (PTA) is **GRANTED** to the extent indicated herein.

The patent term adjustment indicated on the patent is to be corrected by issuance of a certificate of correction showing a revised Patent Term Adjustment of **seven hundred seventeen (717)** days.

On October 4, 2005, the above-identified application matured into U.S. Patent No. 6,952,721 B2. The patent issued with a Patent Term Adjustment of seven hundred sixty-eight (768) days.

The Office determined a patent term adjustment of seven hundred sixty-eight (768) days based on an adjustment for PTO delay of seven hundred seventy-six (776) days pursuant to 35 U.S.C. 154(b)(1)(A)(i) and 37 C.F.R. § 1.703(a)(1), reduced by applicants' delay of five (5) days pursuant to 35 U.S.C. 154(b)(2)(C)(ii) and 37 C.F.R. § 1.704(b) and three (3) days

pursuant to 35 U.S.C. 154(b)(2)(C)(i) and 37 C.F.R. §1.704(c)(10).

A review of the application reveals that the applicant delay of three (3) days is incorrect. Applicants were assessed delay under §1.704(c)(10) for the filing of a "Request for Priority Acknowledgment" on July 30, 2005. However, a review of the application file reveals that applicants filed the "Request for Priority Acknowledgment" on June 9, 2005, not July 30, 2005. Accordingly, applicant delay should have been assessed as fifty-four (54) days, not three (3) days.

Accordingly, issuance of a certificate of correction pursuant to 35 U.S.C. 254 and 37 CFR § 1.322 is appropriate. No petition fee was required and none has been charged. The Office thanks Patentees for their good faith and candor in bringing this matter to the attention of the Office.

The application file is being forwarded to the Certificates of Correction Branch for issuance of a certificate of correction in order to rectify the error regarding the patent term information. See 35 U.S.C. § 254 and 37 CFR 1.322. The certificate of correction will indicate that the term of the above-identified patent is extended or adjusted by **seven hundred seventeen (717)** days subject to any disclaimers.

Telephone inquiries specific to this letter should be directed to Cliff Congo, Petitions Attorney, at (571)272-3207.

Kery A Fries

Kery Fries
Senior Legal Advisor
Office of Patent Legal Administration
Office of Deputy Commissioner
for Patent Examination Policy

Enclosure: Copy of Draft Certificate of Correction (1 page)

UNITED STATES
PATENT AND
TRADEMARK OFFICE

UNDER SECRETARY OF COMMERCE FOR INTELLECTUAL PROPERTY
AND DIRECTOR OF THE UNITED STATES PATENT AND TRADEMARK OFFICE
WASHINGTON, D.C. 20231
WWW.USPTO.GOV

DEC - 4 2002

#10

COLIN P ABRAHAMS
5850 CANOGA AVENUE
SUITE 400
WOODLAND HILLS CA 91367

In re Application of	:
John A. Budny et al	:
Serial No.: 09/875,997	: WITHDRAWAL OF ABANDONMENT
Filed: June 6, 2001	:
Attorney Docket No.: 1008-119	:

This is in response to the petition under 37 CFR 1.181, filed August 26, 2002, requesting withdrawal of the holding of abandonment of the above identified application.

A review of the file history shows that the Office mailed a first Office action to applicants on January 11, 2002, setting a three month shortened statutory period for reply. Applicants replied on May 10, 2002 (Certificate of Mailing date) and the reply was received by the Office as evidenced by an Office date stamped return postcard. The reply, consisting of a request for a one month extension of time and fee therefor and a terminal disclaimer, has been located in the file. The examiner mailed a Notice of Abandonment to applicants on August 14, 2001, indicating no reply had been received. It is noted that the reply is not accompanied by any argument by applicants, however the only outstanding rejection consisted of an obvious double patenting rejection which became moot on acceptance of the filed terminal disclaimer. Thus no further discussion was required. In view the timely reply the Notice of Abandonment mailed August 14, 2002, is considered to have been mailed in error and is hereby withdrawn.

Applicants' petition is **GRANTED**.

The application will be forwarded to the examiner for further consideration.

Should there be any questions with regard to this letter please contact William R. Dixon, Jr. by letter addressed to the Director, Technology Center 1600, Washington, DC 20231, or by telephone at (703) 308-3824 or by facsimile transmission at (703) 305-7230.

John Doll
Director, Technology Center 1600

UNITED STATES PATENT AND TRADEMARK OFFICE

Commissioner for Patents
United States Patent and Trademark Office
P.O. Box 1450
Alexandria, VA 22313-1450
www.uspto.gov

YOUNG & THOMPSON
745 SOUTH 23RD STREET
2ND FLOOR
ARLINGTON, VA 22202

COPY MAILED

JUN 24 2005

OFFICE OF PETITIONS

In re Application of :
Scot R. Young :
Application No. 09/876,012 :
Filed: June 8, 2001 :
Attorney Docket No. 97-401 :

ON PETITION

This is a decision on the petition under 37 CFR 1.137(b), filed June 10, 2005, to revive the above-identified application.

The petition is **GRANTED**.

This application became abandoned for failure to timely file a proper reply to the final Office action mailed February 2, 2004. Accordingly, this application became abandoned on May 3, 2004. A Notice of Abandonment was mailed on August 18, 2004.

The file is being forwarded to Technology Center 1700 for review of the RCE and amendment, filed June 10, 2005, *in due course*.

Telephone inquiries concerning this matter may be directed to the undersigned at (571) 272-3228.

Edward J. Tannouse
Petitions Attorney
Office of Petitions/Patent
United States Patent and Trademark Office

UNITED STATES PATENT AND TRADEMARK OFFICE

COMMISSIONER FOR PATENTS
UNITED STATES PATENT AND TRADEMARK OFFICE
P.O. BOX 1450
ALEXANDRIA, VA 22313-1450
www.uspto.go

Paper No. 5

MAIL

DEC 1 8 2003

DIRECTOR OFFICE
TECHNOLOGY CENTER 2600

Roberts Abokhair & Mardula, LLC
Suite 1000
11800 Sunrise Valley Drive
Reston VA 20191-5302

Application No. 09/876,014

Filed: 6/7/01

DECISION ON REQUEST TO WITHDRAW FROM RECORD

This is a decision on the request to withdraw as attorney/agent of record filed 11/3/03

A grantable request to withdraw as attorney/agent of record must:
(1) indicate the present mailing address of the attorney(s)/agent(s) who seek(s) to withdraw, and
(2) be signed by each attorney/agent seeking to withdraw or clearly be signed on their behalf, and
(3) be *approved* at least thirty (30) days prior to the maximum extendable period for response to any outstanding Office Action, and
(4) indicate the address to which future correspondence should be mailed.

Petitioner has satisfied the requirements for successfully requesting withdrawal. Accordingly, *the request is* ***granted.*** All future correspondence will be directed to the below address until such a time as a request for change of address is filed. This address has been provided by the withdrawing attorney(s).

Kenneth A. Wieder
Special Program Examiner
Technology Center 2600
Communications

cc: Apostille, Inc.
Attn : Jamie Edelkind
P.O. Box 396
Hull, MA 02045

UNITED STATES PATENT AND TRADEMARK OFFICE

COMMISSIONER FOR PATENTS
UNITED STATES PATENT AND TRADEMARK OFFICE
P.O. BOX 1450
ALEXANDRIA, VA 22313-1450
WWW.USPTO.GOV

Paper No.

COPY MAILED

JUN 0 2 2003

OFFICE OF PETITIONS

ON PETITION

WENDEROTH, LIND & PONACK, L.L.P.
2033 K STREET N.W.
SUITE 800
WASHINGTON DC 20006-1021

In re Application of
Atushi Ooyama et al
Application No. 09/876,032
Filed: June 8, 2001
Attorney Docket No. 2001-0736A

This is a decision on the petition, filed May 28, 2003, under 37 CFR 1.313(c)(2) to withdraw the above-identified application from issue after payment of the issue fee.

The petition is **GRANTED**.

The above-identified application is withdrawn from issue for consideration of a submission under 37 CFR 1.114 (request for continued examination). See 37 CFR 1.313(c)(2).

Petitioner is advised that the issue fee paid on May 9, 2003 in the above-identified application cannot be refunded. If, however, the above-identified application is again allowed, petitioner may request that it be applied towards the issue fee required by the new Notice of Allowance.[1]

Telephone inquiries should be directed to the undersigned at (703) 305-8859.

After receipt of the file in the Office of Petitions, the application will be forwarded to Technology Center AU 2828 for processing of the request for continued examination under 37 CFR 1.114.

Karen Creasy

Karen Creasy
Petitions Examiner
Office of Petitions
Office of the Deputy Commissioner
for Patent Examination Policy

---

[1] The request to apply the issue fee to the new Notice may be satisfied by completing and returning the new Issue Fee Transmittal Form PTOL-85(b), which includes the following language thereon: "Commissioner for Patents is requested to apply the Issue Fee and Publication Fee (if any) or re-apply any previously paid issue fee to the application identified above." Petitioner is advised that, whether a fee is indicated as being due or not, the Issue Fee Transmittal Form **must** be completed and timely submitted to avoid abandonment. Note the language in bold text on the first page of the Notice of Allowance and Fee(s) Due (PTOL-85).

SPE Coggins

SPE RESPONSE FOR CERTIFICATE OF CORRECTION 09/876,057

Paper No.: _____

DATE : 1/12/06

TO SPE OF : ART UNIT 3625

SUBJECT : Request for Certificate of Correction on Patent No.: 6915275

A response is requested with respect to the accompanying request for a certificate of correction.

Please complete this form and return with file, within 7 days to:
Palm location **7580, Certificates of Correction Branch – South Tower – 9A22**
If response is for an IFW, **return to employee (named below) via PUBSCofC Team in MADRAS.**
With respect to the change(s) requested, correcting Office and/or Applicant's errors, should the patent read as shown in the certificate of correction (COCIN)? No new matter should be introduced, nor should the scope or meaning of the claims be changed.

Thank You For Your Assistance

Lamonte M. Newsome
Certificates of Correction Branch
Tel. No. 703-305-8309

The request for issuing the above-identified correction(s) is hereby:
Note your decision on the appropriate box.

- ☑ **Approved** — **All** changes apply.
- ☐ **Approved in Part** — Specify below which changes **do not** apply.
- ☐ **Denied** — State the reasons for denial below.

Comments:

Jeffrey A. Smith
Primary Examiner
Acting SPE
AU 3625

SPE **Art Unit**

PTOL-306 (REV. 7/03)
U.S. DEPARTMENT OF COMMERCE Patent and Trademark Office

UNITED STATES PATENT AND TRADEMARK OFFICE

Commissioner for Patents
United States Patent and Trademark Office
P.O. Box 1450
Alexandria, VA 22313-1450
www.uspto.gov

IBM CORP (YA)
C/O YEE & ASSOCIATES PC
P.O. BOX 802333
DALLAS, TEXAS 75380

COPY MAILED

JUN 13 2007

OFFICE OF PETITIONS

In re Application of	:	
Kennedy	:	
Application No. 09/876,066	:	DECISION ON PETITION
Filed: 06/07/2001	:	
Attorney Docket No. AUS92000191US1	:	

This is a decision on the petition under 37 CFR 1.137(b), filed October 23, 2006, to revive the above-identified application.

The petition is **DISMISSED**.

Any request for reconsideration of this decision must be submitted within TWO (2) MONTHS from the mail date of this decision. Extensions of time under 37 CFR 1.136(a) are permitted. The reconsideration request should include a cover letter entitled "Renewed Petition under 37 CFR 1.137(b)." This is **not** a final agency action within the meaning of 5 U.S.C. § 704.

This application became abandoned as a result of petitioner's failure to file an appeal brief (and fee required by 37 CFR 41.20(b)(2)) within the time period provided in 37 CFR 41.37(a)(1). As an appeal brief (and appeal brief fee) was not filed within two (2) months of the Notice of Appeal filed December 10, 2004, and no extensions of time under the provisions of 37 CFR 1.136(a) were obtained, the appeal was dismissed and the proceedings as to the rejected claims were terminated. See 37 CFR 1.197(b). As no claim was allowed, the application became abandoned on February 11, 2005. *See* MPEP 1215.04.

A grantable petition under 37 CFR 1.137(b) must be accompanied by: (1) the required reply, unless previously filed; (2) the petition fee as set forth in 37 CFR 1.17(m); (3) a statement that the entire delay in filing the required reply from the due date for the reply until the filing of a grantable petition pursuant to 37 CFR 1.137(b) was unintentional; and (4) any terminal disclaimer (and fee as set forth in 37 CFR 1.20(d)) required by 37 CFR 1.137(c). Where there is a question as to whether either the abandonment or the delay in filing a petition under 37 CFR 1.137 was unintentional, the Commissioner may require additional information. *See* MPEP 711.03(c)(II)(C) and (D). The instant petition lacks item (1).

The proposed reply required for consideration of a petition to revive must be an appeal brief under 37 CFR 41.37 and the appeal brief fee required by 37 CFR 41.20(b)(2), a Request for Continued Examination and submission (37 CFR 1.114), or the filing of a continuing application under 37 CFR 1.53(b). While an appeal brief was filed on October 23, 2006, an appeal brief fee of $500.00 was not filed.

The application file does not indicate a change of address has been filed in this case, although the address given on the petition differs from the address of record. A change of address should be filed in this case in accordance with MPEP 601.03. A courtesy copy of this decision is being mailed to the address noted on the petition. However, until otherwise instructed, all future correspondence regarding this application will be mailed solely to the address of record.

Further correspondence with respect to this matter should be addressed as follows:

By mail: Mail Stop PETITIONS
Commissioner for Patents
Post Office Box 1450
Alexandria, VA 22313-1450

By hand: Customer Service Window
Mail Stop Petitions
Randolph Building
401 Dulany Street
Alexandria, VA 22314

The centralized facsimile number is **(571) 273-8300**.

Any questions concerning this matter may be directed to Christopher Bottorff at (571) 272-6052 or in his absence, the undersigned at (571) 272-7099.

David Bucci
Petitions Examiner
Office of Petitions

cc: JEFFREY S. LABAW
IBM INTELECTUAL PROPERTY LAW
11400 BURNET RD
AUSTIN TX, 78758

UNITED STATES PATENT AND TRADEMARK OFFICE

Commissioner for Patents
United States Patent and Trademark Office
P.O. Box 1450
Alexandria, VA 22313-1450
www.uspto.gov

IBM CORP (YA)
C/O YEE & ASSOCIATES PC
P.O. BOX 802333
DALLAS TX 75380

COPY MAILED

NOV 08 2007

OFFICE OF PETITIONS

In re Application of
Thomas A. KENNEDY
Application No. 09/876,066
Filed: June 7, 2001
Attorney Docket No. AUS920010191US1

DECISION ON PETITION

This is a decision on the renewed petition under 37 CFR 1.137(b), filed July 17, 2007, to revive the above-identified application.

The petition is **GRANTED**.

This application became abandoned as a result of petitioner's failure to file an appeal brief (and fee required by 37 CFR 41.20(b.)(2)) within the time period provided in 37 CFR 41.37(a)(1). As an appeal brief (and appeal brief fee) was not filed within two (2) months of the Notice of Appeal filed December 10, 2004, and no extensions of time under the provisions of 37 CFR 1.136(a) were obtained, the appeal was dismissed and the proceedings as to the rejected claims were terminated. See 37 CFR 1.197(b). As no claim was allowed, the application became abandoned on February 11, 2005. *See* MPEP 1215.04.

The petition satisfies the conditions for revival pursuant to the provisions of 37 CFR 1.137(b) in that (1) the reply in the form of an appeal brief and appeal brief fee of $500; (2) the petition fee of $1500; and (3) the required statement of unintentional delay have been received. Accordingly, the reply to the Notice of Appeal filed December 10, 2004 is accepted as having been unintentionally delayed.

The application file does not indicate a change of address has been filed in this case, although the address given on the petition differs from the address of record. A change of address should be filed in this case in accordance with MPEP 601.03. A courtesy copy of this decision is being mailed to the address noted on the petition. However, until otherwise instructed, all future correspondence regarding this application will be mailed solely to the address of record.

Telephone inquiries concerning this decision should be directed to Brian Sines at (571) 272-6051 or in his absence, the undersigned at (571) 272-7099.

The application file is being referred to Technology Center AU 2154 for appropriate action on the concurrently filed amendment.

David Bucci
Petitions Examiner
Office of Petitions

Cc: Jeffrey S. Labaw
IBM Intellectual Property Law
11400 Burnett Rd.
Austin, TX 78758

DO NOT SEND TO WAREHOUSE

SPE RESPONSE FOR CERTIFICATE OF CORRECTION

DATE : 42605 09876102 Paper No.: _____

TO SPE OF : ART UNIT 2811

SUBJECT : Request for Certificate of Correction on Patent No.: 6762450

A response is requested with respect to the accompanying request for a certificate of correction.

Please complete this form and return with file, within 7 days to:
Certificates of Correction Branch - PK 3-915
Palm location **7580** - Tel. No. 305-8309

With respect to the change(s) requested, correcting Office and/or Applicant's errors, should the patent read as shown in the certificate of correction? No new matter should be introduced, nor should the scope or meaning of the claims be changed.

Should the COTC be granted? yes

R Johnson
Certificates of Correction Branch

Thank You For Your Assistance

The request for issuing the above-identified correction(s) is hereby:
Note your decision on the appropriate box.

- ☒ Approved — All changes apply.
- ☐ Approved in Part — Specify below which changes do not apply.
- ☐ Denied — State the reasons for denial below.

Comments:

Sara Crane
Sara Crane
Primary Examiner

SPE

2811
Art Unit

PTOL-306 (REV. 7/03)

U.S. DEPARTMENT OF COMMERCE Patent and Trademark Office

09/876102 Examiner: CRANE, SARA GAU: 2811
Inventor: SANDHU , GURTEJ, et al Classification: 257/306.000
Status: 150 - PATENTED CASE
Title: METHOD OF FORMING A CAPACITOR AND A CAPACITOR CONSTRUCTION

Application Messages (1 items sorted by Receiver in Descending order)

Date	Code	Status	Status2	Receiver	Team	Text
02/22/2005	COCIN	open		SCRANE	2811Examination	should the cofc be granted. plse aswer and fwd bck to rjohnson tnks

Upon review of the Request for C of C, the examiner should:

- Print the PTOL-306 form
- Complete the response portion on the lower half of the form
- Submit the form to the SPE for signature
- Attach an orange routing slip (with the Doc Code indicated as COCX)
- Send the completed form to be scanned

UNITED STATES PATENT AND TRADEMARK OFFICE

COMMISSIONER FOR PATENTS
UNITED STATES PATENT AND TRADEMARK OFFICE
P.O. BOX 1450
ALEXANDRIA, VA 22313-1450
www.uspto.gov

Paper No. 6

NAVAL RESEARCH LABORATORY
ASSOCIATE COUNSEL (PATENTS)
CODE 1008.2
4555 OVERLOOK AVENUE, S.W.
WASHINGTON, DC 20375-5320

COPY MAILED

DEC 29 2003

OFFICE OF PETITIONS

In re Application of
Temes et al.
Application No. 09/876,137
Filed: June 8, 2001
Attorney Docket No. 77,119

ON PETITION

This is a decision on the petition under 37 C.F.R. § 1.137(b), filed November 4, 2003, to revive the above-identified application.

The petition is **granted.**

The above-identified application became abandoned for failure to reply in a timely manner to the Notice to File Missing Parts of Application (Notice) mailed August 6, 2001. The Notice set a period for reply of two (2) months from the mail date of the Notice. No extensions of time under the provisions of 37 CFR 1.136(a) were obtained. Accordingly, the above-identified application became abandoned on October 7, 2001. A Notice of Abandonment was mailed on August 27, 2003.

Petitioner has met the requirements to revive the above-identified application pursuant to 37 CFR 1.137(b).

The file is now being forwarded to the Office of Initial Patent Examination for further processing.

Telephone inquiries should be directed to Paralegal Liana Chase at (703) 306-0482.

Wan Laymon
Petitions Examiner
Office of Petitions
Office of the Deputy Commissioner
for Patent Examination Policy

UNITED STATES PATENT AND TRADEMARK OFFICE

Commissioner for Patents
United States Patent and Trademark Office
P.O. Box 1450
Alexandria, VA 22313-1450
www.uspto.gov

Paper No. 090304

FOLEY AND LARDNER
3000 K STREET, NW, SUITE 500
WASHINGTON, DC 20007

SEP 16 2004

In re Application of:	:	
WOLFGANG STREHLAU et al.	:	
Serial No.: 09/876,142	:	DECISION ON REQUEST TO WITHDRAW FROM RECORD
Filed: June 8, 2001	:	
Attorney Docket No.: **078096-0105**	:	

This is a decision on the request to withdraw as attorney/agent of record under 37 C.F.R. § 1.36, filed April 25, 2003.

A grantable request to withdraw as attorney of record must be signed by every attorney seeking to withdraw or contain a clear indication that one attorney is signing on behalf of others. A request to withdraw will not be approved unless at least thirty (30) days would remain between the date of approval and the later of the expiration date of a time to file a response or the expiration date of the maximum time period, which can be extended under 37 C.F.R. § 1.136(a).

The request meets all the above stated requirements. The request was signed by Richard C. Peet, on behalf of himself and all the attorneys/agents of record. There is no outstanding Office action at this time.

The request is **APPROVED**.

All future communications from the Office will be directed to Stephen D. Scanlon, at the below address, until otherwise notified by applicant.

Inquiries related to this decision should be directed to Clayton E. LaBalle at (571) 272-1594.

Clayton E. LaBalle, Special Programs Examiner
Technology Center 2800
Semiconductors, Electrical and Optical
Systems and Components

cc: STEPHEN D. SCANLON
JONES DAY
901 LAKESIDE AVENUE
CLEVELAND, OH 44114

UNITED STATES PATENT AND TRADEMARK OFFICE

Commissioner for Patents
United States Patent and Trademark Office
P.O. Box 1450
Alexandria, VA 22313-1450
www.uspto.gov

STEPHEN D. SCANLON
JONES DAY
901 LAKESIDE AVENUE
CLEVELAND OH 44114

MAILED

SEP 30 2009

OFFICE OF PETITIONS

In re Patent No. 6,862,533	:	
Issue Date: March 1, 2005	:	
Application No. 09/876,142	:	NOTICE
Filed: June 8, 2001	:	
Attorney Docket No. 078096-0105	:	

This is a notice regarding your request for acceptance of a fee deficiency submission under 37 CFR 1.28.

The Office no longer investigates or rejects original or reissue applications under 37 CFR 1.56. **1098 Off. Gaz. Pat. Office 502 (January 3, 1989)**. Therefore, nothing in this Notice is intended to imply that an investigation was done.

Your fee deficiency submission under 37 CFR 1.28 is hereby **ACCEPTED**.

This application is no longer entitled to small entity status. Accordingly, all future fees paid in this application must be paid at the large entity rate.

Inquiries related to this communication should be directed to Terri Johnson at (571) 272-2991.

Chris Bottorff
Petitions Examiner
Office of Petitions

UNITED STATES PATENT AND TRADEMARK OFFICE

COMMISSIONER FOR PATENTS
UNITED STATES PATENT AND TRADEMARK OFFICE
P.O. BOX 1450
ALEXANDRIA, VA 22313-1450
www.uspto.gov

Paper No. 8

MAIL

MAY - 3 2004

DIRECTOR OFFICE
TECHNOLOGY CENTER 2100

Patrick Michael Dwyer
PATRICK M. DWYER PC
1818 Westlake Avenue N
Suite 114
Seattle, WA 98109

In re Application of:
Kniest, J.
Application No. 09/876,191
Filed: June 6, 2001
For: SYSTEM FOR WIRELESS EXCHANGE OF DATA WITH HAND HELD DEVICES

DECISION ON REQUEST TO WITHDRAW AS ATTORNEY OR AGENT

This is a decision on the Request To Withdraw from Representation filed April 12, 2004.

A grantable request to withdraw as attorney of record should indicate thereon the present mailing addresses of the attorney(s) who is/are withdrawing from the record and of the applicant. The request for withdrawal must be signed by every attorney seeking to withdraw or contain a clear indication that one attorney is signing on behalf of another/others. A request to withdraw will not be approved unless at least 30 (thirty) days would remain between the date of approval and the later of the expiration date of a time to file a response or the expiration date of the maximum time period which can be extended under 37 C.F.R. § 1. 136(a). The effective date of withdrawal being the date of decision and not the date of request. See M.P.E.P. § 402.06. 37 C.F.R. § 1.36 further requires that the applicant or patent owner be notified of the withdrawal of the attorney or agent.

The request filed April 12, 2004 meets all the requirements. Accordingly the request is **GRANTED**.

Because no request was made for a change in correspondence address, all future communications from the United States Patent and Trademark Office (Office) will continue to be directed to the above-listed address until otherwise notified. Applicant is reminded of the obligation to promptly notify the Office of any change in correspondence address to ensure receipt of all communications from the Office.

for James R. Matthews

Vincent N. Trans
Special Program Examiner
Technology Center 2100
Computer Architecture, Software, and
Information Security
703-305-9750

UNITED STATES PATENT AND TRADEMARK OFFICE

COMMISSIONER FOR PATENTS
UNITED STATES PATENT AND TRADEMARK OFFICE
P.O. BOX 1450
ALEXANDRIA, VA 22313-1450
WWW.USPTO.GOV

Paper No. 16

MILLEN, WHITE, ZELANO & BRANIGAN, P.C.
2200 CLARENDON BLVD.
SUITE 1400
ARLINGTON, VA 22201

COPY MAILED

JUL 1 6 2003

OFFICE OF PETITIONS

In re Application of
Neuschutz et al.
Application No. 09/876,227
Filed: June 8, 2001
Attorney Docket No. MERCK-2276

ON PETITION

This is a decision on the petition under 37 C.F.R. § 1.137(b), filed July 7, 2003, to revive the above-identified application.

The petition is **granted.**

This application became abandoned for failure to timely reply within three months to the final Office action mailed December 31, 2002. No extensions of time under the provisions of 37 CFR 1.136(a) were obtained. Accordingly, this application became abandoned on April 1, 2003.

Petitioner has met the requirements to revive the above-identified application pursuant to 37 CFR 1.137(b).

The Notice of Appeal filed July 7, 2003, has been entered and made of record. Accordingly, the 2-month period for filing the appeal brief, in triplicate, accompanied by the fee required by law, runs from the date of this decision.

The file is now being forwarded to Technology Center 3700.

Telephone inquiries should be directed to Program Assistant Liana Chase at (703) 306-0482.

Frances Hicks
Petitions Examiner
Office of Petitions
Office of the Deputy Commissioner
for Patent Examination Policy

UNITED STATES PATENT AND TRADEMARK OFFICE

COMMISSIONER FOR PATENTS
UNITED STATES PATENT AND TRADEMARK OFFICE
WASHINGTON, DC 20231
www.uspto.gov

Paper No. 9

PATENT ADMINSTRATOR
KATTEN MUCHIN ZAVIS ROSENMAN
525 WEST MONROE STREET
SUITE 1600
CHICAGO IL 60661-3693

MAILED

FEB 13 2003

DIRECTOR'S OFFICE
TECHNOLOGY CENTER 2600

In re Application of:
Vaughn Keenan et al
Application No. 09/876,230
Filed: June 8, 2001
For: **CAMERA-BASED SYSTEM FOR CAPTURING IMAGES OF A TARGET AREA**

DECISION ON PETITION TO MAKE SPECIAL

This is a decision on the Petition filed December 11, 2002, under Manual of Patent Examination Procedure §708.02, II: Infringement.

A grantable petition under Manual of Patent Examination Procedure §708.02, II, must be accompanied by the required fee and a statement alleging:

(1) that there is an infringing device or product actually on the market or method in use;

(2) that a rigid comparison of the alleged infringing device, product, or method with the claims of the application has been made, and that, in his or her opinion, some of the claims are unquestionably infringed; and,

(3) that he or she has made or caused to be made a careful and thorough search of the prior art or has a good knowledge of the pertinent prior art. Further, Applicant must provide one copy of each of the references deemed most closely related to the subject matter encompassed by the claims if said references are not already of record.

The petition meets all the above-listed requirements. Accordingly, the petition is **GRANTED**.

The application will retain its special status throughout its entire prosecution, including any appeal to the Board of Patent Appeals and Interferences, subject only to diligent prosecution by the applicant. After mailing, the application will be forwarded to the examiner for immediate handling.

Krista Zele
Special Program Examiner
Technology Center 2600
Communications
(703) 305-4701

UNITED STATES PATENT AND TRADEMARK OFFICE

Commissioner for Patents
United States Patent and Trademark Office
P.O. Box 1450
Alexandria, VA 22313-1450
www.uspto.gov

CARELLA, BYRNE, BAIN, GILFILLAN, CECCHI, STEWART & OLSTEIN
5 BECKER FARM ROAD
ROSELAND, NJ 07068

COPY MAILED
FEB 19 2009
OFFICE OF PETITIONS

In re Patent No. 6,908,613	:	
Issue Date. June 21, 2005	:	
Application No. 09/876,256	:	NOTICE
Filed: June 8, 2001	:	
Attorney Docket No. 469201-651	:	

This is a notice regarding your request for acceptance of a fee deficiency submission under 37 CFR 1.28.

The Office no longer investigates or rejects original or reissue patent under 37 CFR 1.56. **1098 Off. Gaz. Pat. Office 502 (January 3, 1989)**. Therefore, nothing in this Notice is intended to imply that an investigation was done.

Your fee deficiency submission under 37 CFR 1.28 is hereby **ACCEPTED**.

This patent is no longer entitled to small entity status. Accordingly, all future fees paid in this patent must be paid at the large entity rate.

Inquiries related to this communication should be directed to the undersigned at (571) 272-6059.

The patent file will be forwarded to the Files Repository.

A. Kelley

Alicia Kelley
Petitions Examiner
Office of Petitions

UNITED STATES PATENT AND TRADEMARK OFFICE

COMMISSIONER FOR PATENTS
UNITED STATES PATENT AND TRADEMARK OFFICE
WASHINGTON, D.C. 20231
www.uspto.gov

Paper No. 5

TIMOTHY N TROP
TROP PRUNER & HU PC
8554 KATY FWY, STE 100
HOUSTON, TX 77024-1805

COPY MAILED

OCT 2 3 2001

OFFICE OF PETITIONS

In re Application of	:	
Brian S. Forbes et al	:	DECISION DISMISSING
Application No. 09/876,277	:	PETITION
Filed: June 7, 2001	:	
Attorney Docket No. INTL-0577-US	:	

This is a decision on the paper styled "Request For Corrected Official Filing Receipt" filed September 7, 2001, which is properly treated as a petition under 37 CFR 1.10(d), requesting that the above-identified application be accorded a filing date of June 6, 2001, rather than the presently accorded filing date of June 7, 2001.

Petitioners request the earlier filing date on the basis that the application was purportedly deposited in Express Mail service on June 6, 2001, before the last scheduled pick up for the day, pursuant to the requirements of 37 CFR 1.10. In support, the petition is accompanied by a copy of a page from counsels' Express Mail log book.

Paragraph (a) of 37 CFR 1.10 states that:

> Any correspondence received by the Patent and Trademark Office (Office) that was delivered by the "Express Mail Post Office to Addressee" service of the United States Postal Service (USPS) will be considered filed in the Office on the date of deposit with the USPS. <u>The date of deposit with the USPS is shown by the "date-in" on the "Express Mail" mailing label or other official USPS notation</u>. If the USPS deposit date cannot be determined, the correspondence will be accorded the Office receipt date as the filing date. See §1.6(a).

(Emphasis supplied). Paragraph (d) of 37 CFR 1.10 states that:

> Any person filing correspondence under this section that was received by the Office and delivered by the "Express Mail Post Office to Addressee" service of

> the USPS, who can show that the "date-in" on the "Express Mail" mailing label or other official notation entered by the USPS was incorrectly entered or omitted by the USPS, may petition the Commissioner to accord the correspondence a filing date as of the date the correspondence is shown to have been deposited with the USPS, provided that:
> (1) The petition is filed promptly after the person becomes aware that the Office has accorded, or will accord, a filing date based upon an incorrect entry by the USPS;
> (2) The number of the "Express Mail" mailing label was placed on the paper(s) or fee(s) that constitute the correspondence prior to the original mailing by "Express Mail"; and
> (3) The petition includes a showing which establishes, to the satisfaction of the Commissioner, that the requested filing date was the date the correspondence was deposited in "Express Mail Post Office to Addressee" service prior to the last scheduled pickup for that day. Any showing pursuant to this paragraph must be corroborated by evidence from the USPS or that came into being after deposit and within one business day of the deposit of the correspondence in the "Express Mail Post Office to Addressee" service of the USPS. Any statement submitted in support of such a showing pursuant to this paragraph must be a verified statement if made by a person other than an employee of the USPS or a practitioner as defined in § 10.1(r) of this chapter.

A grantable petition under 37 CFR 1.10(d) must include "a showing which establishes, to the satisfaction of the Commissioner, that the requested filing date was the date the correspondence was deposited in "Express Mail Post Office to Addressee" service prior to the last scheduled pickup for that day." In addition, the showing "must be corroborated by evidence from the USPS or that came into being after deposit and within one business day of the deposit of the correspondence in the 'Express Mail Post Office to Addressee' service of the USPS."

The petition filed September 7, 2001 is not accompanied by the corroborating evidence required by the rule. Accordingly, the petition is <u>dismissed</u>.

Petitioners attention is directed to 37 CFR 1.10(d), which states, in part, that:

> Correspondence should be deposited directly with an employee of the USPS to ensure that the person depositing the correspondence receives a legible copy of the "Express Mail" mailing label with the "date-in" clearly marked. Persons dealing indirectly with the employees of the USPS (such as by

deposit in an "Express Mail" drop box) do so at the risk of not receiving a copy of the "Express Mail" mailing label with the desired "date-in" clearly marked.

It is unfortunate that petitioners chose to deposit a paper as important as a patent application in Express Mail without immediately obtaining an Express Mail receipt showing the desired date of deposit.

Further correspondence with respect to this matter should be addressed as follows:

By mail: Assistant Commissioner for Patents
Box DAC
Washington, D.C. 20231

By facsimile: (703) 308-6916
Attn: Office of Petitions

By hand: Office of Petitions
2201 South Clark Place
Crystal Plaza 4, Suite 3C23
Arlington, VA 22202

The application is being returned to Initial Patent Examination Division for further processing using the substitute drawings filed September 19, 2001 with the presently accorded filing date of June 7, 2001.

Telephone inquires specific to this matter should be directed to Wan Laymon at (703) 306-5685.

Sherry Brinkley
Petitions Examiner
Office of Petitions
Office of the Deputy Commissioner
for Patent Examination Policy

UNITED STATES PATENT AND TRADEMARK OFFICE

Commissioner for Patents
United States Patent and Trademark Office
P.O. Box 1450
Alexandria, VA 22313-1450
www.uspto.gov

TEXAS INSTRUMENTS INCORPORATED
P O BOX 655474, M/S 3999
DALLAS, TX 75265

COPY MAILED

SEP 24 2004

OFFICE OF PETITIONS

In re Application of :
Mahalingam Nandakumar, et al. :
Application No. 09/876,292 : ON PETITION
Filed: June 7, 2001 :
Attorney Docket No. TI-31089 :

This is a decision on the petition under 37 CFR 1.137(b), filed June 7, 2004, to revive the above-identified application.

The petition is **GRANTED.**

The above-identified application became abandoned for failure to comply in a timely manner to the Notice of Drawing Inconsistency With Specification mailed April 16, 2004, which set a statutory period for reply of one (1) month. Accordingly, the above-identified application became abandoned on May 17, 2004.

The application file is being forwarded to the Publishing Division for further processing.

Telephone inquiries concerning this decision should be directed to the undersigned at (703) 306-5594.

Retta Williams

Retta Williams
Petitions Examiner
Office of Petitions
Office of the Deputy Commissioner
for Patent Examination Policy

UNITED STATES PATENT AND TRADEMARK OFFICE

Commissioner for Patents
United States Patent and Trademark Office
P.O. Box 1450
Alexandria, VA 22313-1450
www.uspto.gov

Patent No. : 6996644 B2
Ser. No. : 09/876,301
Inventor(s) : SCHOCH, DANIEL
Issued : 02/07/06
Title : **APPARATUS AND METHODS FOR INITIALIZING INTEGRATED CIRCUIT ADDRESSES**
Docket No. : **231008-0352**

Re: Request for Certificate of Correction

Consideration has been given your request for the issuance of a certificate of correction for the above-identified patent under the provisions of Rule(s) 1.322 and/or 1.323.

Assignees' names and addresses (assignment data) printed in a patent, are based *solely* on information supplied in the appropriate space for identifying the assignment data, i.e., item 3 of the Issue Fee Transmittal Form PTOL-85B. Granting of a request under 37 CFR 3.81(b) is required to correct applicant's error providing ***incorrect or erroneous*** assignment data, *before* issuance of a Certificate of Correction, under 37 CFR 1.323 *(see Manual of Patent Examining Procedures (M.P.E.P) Chp.1400, sect. 1481).* This procedure is required *at any time after the issue fee is paid*, including after issuance of the patent.

In view of the foregoing, your request, in this mater, is hereby denied.

A request to correct the Assignee under 37 CFR 3.81(b) should include:

A. **the processing fee set forth in 37 CFR 1.117(h) (currently $130);**
B. a statement that the failure to include the correct assignee name on the PTOL-85B was inadvertent; and
C. a copy of the Notice of Recordation of Assignment Document, reflecting the reel and frame number where the assignment(s) is recorded and/or reflecting proof of *the date* the assignment was submitted for recordation.

In the Request, Applicant(s) may request that the file be forwarded to Certificates of Correction Branch, for issuance of a Certificate of Correction, if the Request is granted.

Any request under 37 CFR 3.81(b) should be directed to the following address or facsimile number:

By mail: Mail Stop PETITIONS
Commissioner for Patents
Post Office Box 1450
Alexandria, VA 22313-1450

By hand: Customer Service Window
Mail Stop Petitions
Randolph Building
401 Dulany Street
Alexandria, VA 22314

By fax: (703) 872-9306
ATTN: Office of Petitions

If a fee (currently $100) was previously submitted for consideration of a Request for Certificate of Correction, under CFR 1.323, to correct assignment data, , no additional fee is required.

Lamonte M. Newsome
For Cecelia Newman
Decisions & Certificates
of Correction Branch
(703) 308-9390 #112 or (703) 308-8309

Ted R. Rittmaster
Foley & Lardner
Suite 3500
2029 Century Park East
Los Angeles CA 90067-3021

LMN

UNITED STATES PATENT AND TRADEMARK OFFICE

Commissioner for Patents
United States Patent and Trademark Office
P.O. Box 1450
Alexandria, VA 22313-1450
www.uspto.gov

MARK LEVY
SALZMAN & LEVY
STE. 902
19 CHENANGO ST.
BINGHAMTON, NY 13901

COPY MAILED
JUN 2 1 2004
OFFICE OF PETITIONS

In re Application of	:	
Kathleen L. Horwath et al	:	
Application No. 09/876,348	:	ON PETITION
Filed: June 7, 2001	:	
Attorney Docket No. RB-125 RI	:	

This is a decision on the petition under 37 CFR 1.137(b), filed June 10, 2004, to revive the above-identified application.

The petition is **GRANTED**.

The above-identified application became abandoned for failure to reply in a timely manner to the non-final Office action mailed December 1, 2003, which set a shortened statutory period for reply of three (3) months. No extensions of time under the provisions of 37 CFR 1.136(a) were obtained. Accordingly, the above-identified application became abandoned on March 2, 2004.

Telephone inquiries concerning this decision should be directed to Wan Laymon at (703) 306-5685.

This matter is being referred to Technology Center AU 1653.

Wan Laymon
Wan Laymon
Petitions Examiner
Office of Petitions
Office of the Deputy Commissioner
for Patent Examination Policy

UNITED STATES PATENT AND TRADEMARK OFFICE

Commissioner for Patents
United States Patent and Trademark Office
P.O. Box 1450
Alexandria, VA 22313-1450
www.uspto.gov

THE PROCTER & GAMBLE COMPANY
INTELLECTUAL PROPERTY DIVISION
WINTON HILL BUSINESS CENTER - BOX 161
6110 CENTER HILL AVENUE
CINCINNATI, OHIO 45224

COPY MAILED
NOV 03 2006
OFFICE OF PETITIONS

In re Application of	:	
Luigi Pace et al	:	
Application No. 09/876,359	:	DECISION GRANTING PETITION
Filed: June 7, 2001	:	UNDER 37 CFR 1.137(b)
Attorney Docket No. CM2381	:	

This is a decision on the petition under 37 CFR 1.137(b), filed March 31, 2006, to revive the above-identified application.

The petition is **GRANTED**.

The above-identified application became abandoned for failure to reply within the meaning of 37 CFR 1.113 in a timely manner to the final Office action mailed September 16, 2004, which set a shortened statutory period for reply of three (3) months. No extensions of time under the provisions of 37 CFR 1.136(a) were obtained. Accordingly, the above-identified application became abandoned on December 17, 2004. A Notice of Abandonment was mailed on March 29, 2005.

The rule at 37 CFR 1.137(b)(3) requires a statement that "the entire delay in filing the required reply from the due date for the reply until the filing of a grantable petition pursuant to 37 CFR 1.137(b) was unintentional." Since the statement appearing in the petition varies from the language of the rule, the statement is being construed as the statement required by 37 CFR 1.137(b)(3). Petitioner must notify the Office if this is **not** a correct interpretation of the statement appearing in the petition.

The petition satisfies the conditions for revival pursuant to the provisions of 37 CFR 1.137(b) in that (1) the reply (request for continued examination under 37 CFR 1.114, $790 filing fee, and submission as required by 37 CFR 1.114), (2) the $1,500 petition fee, and (3) an adequate statement of unintentional delay have

been received. Accordingly, the reply to the final Office action of September 16, 2004 is accepted as having been unintentionally delayed.

It is not apparent whether the person signing the statement of unintentional delay was in a position to have firsthand or direct knowledge of the facts and circumstances of the delay at issue. Nevertheless, such statement is being treated as having been made as the result of a reasonable inquiry into the facts and circumstances of such delay. See 37 CFR 10.18(b) and Changes to Patent Practice and Procedure; Final Rule Notice, 62 Fed. Reg. 53131, 53178 (October 10, 1997), 1203 Off. Gaz. Pat. Office 63, 103 (October 21, 1997). In the event that such an inquiry has not been made, petitioner must make such an inquiry. If such inquiry results in the discovery that the delay was intentional, petitioner must notify the Office.

There is no indication that the person signing the petition was ever given a power of attorney to prosecute the above-identified application. If the person signing the petition desires to receive future correspondence regarding this application, the appropriate power of attorney documents must be submitted. While a courtesy copy of this decision is being mailed to the person signing the petition, all future correspondence will be directed to the address currently of record until such time as appropriate instructions are received to the contrary.

Telephone inquiries concerning this decision should be directed to the undersigned at (571) 272-3218.

This matter is being referred to Technology Center AU 1751 for processing the request for continued examination and for consideration of the submission (amendment).

Frances Hicks

Frances Hicks
Petitions Examiner
Office of Petitions

cc:

Clare M. Iery
Dinsmore & Shohl LLP
1900 Chemed Center
255 East Fifth Street
Cincinnati, Ohio 45202

UNITED STATES PATENT AND TRADEMARK OFFICE

Commissioner for Patents
United States Patent and Trademark Office
P.O. Box 1450
Alexandria, VA 22313-1450
www.uspto.gov

SONNENSCHEIN NATH & ROSENTHAL LLP
P O BOX 061080
WACKER DRIVE STATION, SEARS TOWER
CHICAGO, IL 60606-1080

COPY MAILED

NOV 15 2005

OFFICE OF PETITIONS

In re Application of	:	
Aleix M. Martinez	:	
Application No. 09/876,395	:	DECISION GRANTING PETITION
Filed: June 7, 2001	:	UNDER 37 CFR 1.313(c)(2)
Attorney Docket No. 09792909-0437	:	

This is a decision on the petition, filed November 11, 2005, under 37 CFR 1.313(c)(2) to withdraw the above-identified application from issue after payment of the issue fee.

The petition is **GRANTED**.

The above-identified application is withdrawn from issue for consideration of a submission under 37 CFR 1.114 (request for continued examination). See 37 CFR 1.313(c)(2).

Petitioner is advised that the issue fee paid on August 31, 2005 in the above-identified application cannot be refunded. If, however, the above-identified application is again allowed, petitioner may request that it be applied towards the issue fee required by the new Notice of Allowance.[1]

There is no indication that petitioner herein, Mr. William F. Bahret, was ever given a power of attorney to act in this application. Nevertheless, in accordance with 37 CFR 1.34, the signature of Mr. Bahret appearing on the correspondence shall constitute a representation to the United States Patent and Trademark Office that he is authorized to represent the particular party in whose behalf he acts. If Mr. Bahret desires to receive correspondence regarding this

---

[1] *The request to apply the issue fee to the new Notice may be satisfied by completing and returning the new Issue Fee Transmittal Form PTOL-85(b) (along with any balance due or the amount due at the time of payment), which includes the following language thereon: "Commissioner for Patents is requested to apply the Issue Fee and Publication Fee (if any) or re-apply any previously paid issue fee to the application identified above." Petitioner is advised that, whether a fee is indicated as being due or not, the Issue Fee Transmittal Form* ***must*** *be completed and timely submitted to avoid abandonment. Note the language in bold text on the first page of the Notice of Allowance and Fee(s) Due (PTOL-85).*

file, the appropriate power of attorney documentation must be submitted. A courtesy copy of this decision is being mailed to Mr. Bahret; however, until otherwise instructed, all future correspondence regarding this application file will be directed solely to the above-noted correspondence address of record.

Telephone inquiries should be directed to the undersigned at (571) 272-3218.

This matter is being referred to Technology Center AU 2625 for processing of the request for continued examination under 37 CFR 1.114 and for consideration of the concurrently filed amendment.

Frances Hicks
Petitions Examiner
Office of Petitions

cc:

William F. Bahret
Bahret & Associates
320 N. Meridian Street, Suite 510
Indianapolis, IN 46204

UNITED STATES PATENT AND TRADEMARK OFFICE

Commissioner for Patents
United States Patent and Trademark Office
P.O. Box 1450
Alexandria, VA 22313-1450
www.uspto.gov

Paper No. 11

SCULLY SCOTT MURPHY & PRESSER, PC
400 GARDEN CITY PLAZA
GARDEN CITY NY 11530

COPY MAILED
JUL 2 2 2004
OFFICE OF PETITIONS

In re Application of
KARIYAZAKI
Application No. 09/876,396
Filed: June 7, 2001
For: SEMICONDUCTOR DEVICE

: DECISION
: ON PETITION

This is a decision on the petition filed October 6, 2003, under 37 CFR 1.137(a) to revive the above-identified application.

The petition to revive under 37 CFR 1.137(a) is **granted** and this application restored to pending status..

While the applicant and the examiner are not in agreement as to whether the reply of record is in compliance with 37 CFR 1.121, this application is nevertheless being revived with the reply of record. As noted in MPEP 711.03(c)), section IIIA(2)(a) p. 700-166 (May 2004), the acceptance of the reply by this office when granting a petition to revive is not a binding determination that the reply is entirely acceptable. The examiner may determine that the reply is not in compliance with 37 CFR 1.121 and send a notice to that effect. Applicant may concur with any subsequent notice and thereafter comply, or may petition under 37 CFR 1.181 any adverse holding by the examiner to the Group Director.

This application is being returned to Technology Center AU 2811.

Telephone inquiries related to this communication should be directed to the undersigned at (703) 305-1820. Questions relating to TC processing should be directed to the Technology Center

Brian Hearn

Brian Hearn
Petitions Examiner
Office of Petitions
Office of the Deputy Commissioner for
Patent Examination Policy

UNITED STATES PATENT AND TRADEMARK OFFICE

Commissioner for Patents
United States Patent and Trademark Office
P.O. Box 1450
Alexandria, VA 22313-1450
www.uspto.gov

MOTOROLA INC
600 NORTH US HIGHWAY 45
ROOM AS437
LIBERTYVILLE IL 60048-5343

COPY MAILED
NOV 22 2006
OFFICE OF PETITIONS

In re Application of
La Tor, et al.
Application No. 09/876,398
Filed: June 7, 2001
Attorney Docket No. CS10917
For: CLIP-ON/CLIP-IN SMART MODULE

ON PETITION

This is a decision on the petition under 37 CFR 1.181, filed April 11, 2006, to withdraw the holding of abandonment of the above-identified application.

The petition under 37 CFR 1.181 is **granted**.

This application was held abandoned for failure to respond in a timely and proper manner to the final Office action mailed on July 28, 2005, which set an extendable three month period for reply. Applicants submitted an amendment after final on September 28, 2005. The amendment after final failed to place this application in *prima facie* condition for allowance, as was explained in the November 2, 2005 Advisory action. On November 28, 2005 petitioners filed another amendment. The Office has no record of receiving additional correspondence in application no. 09/876,398 on November 28, 2005. Therefore, the Office considered the application abandoned on October 29, 2005. A Notice of Abandonment was mailed on April 17, 2006.

Petitioners assert that a proper response in the form of a RCE and a one month extension of time was timely filed on November 28, 2005. A review of the copy of the November 28, 2005 RCE and extension of time filed with the present petition reveals that petitioners listed the application number as 09/876,298. Therefore, the RCE and extension of time were not associated with application no. 09/876,398's file.

A review of the contents of application no. 09/876,298 reveals that the November 28, 2005 RCE and extension of time are present.

Even though petitioners cited the wrong application number on the RCE and extension of time, under MPEP 502, " A minor error in the identification of the application can be corrected by the group provided the correct identification can be quickly discovered. Examples of minor errors are transposed numbers, typographical errors, and listing the parent application number." The

undersigned believes that a relatively simple review of Office records would have yielded the correct application number to enable the Office to match the November 28, 2005 correspondence with this application file. A cross-referencing of any of the accurate identifiers found on the RCE and extension of time with Office databases would have revealed the typographical error.

Copies of the November 28, 2005 RCE and extension of time have been placed in the file of the above-identified application. Finance records will be adjusted accordingly.

The November 28, 2005 RCE and extension of time were timely filed. Accordingly, the petition is **GRANTED**, the Notice of Abandonment is hereby vacated, and the holding of abandonment withdrawn. No petition fee has been or will be charged in connection with this matter.

The application file will be forwarded to the Technology Center AU 2614 for consideration of the RCE filed on November 28, 2005.

Telephone inquiries pertaining to this matter may be directed to the undersigned at (571) 272-3230.

Shirene Willis Brantley

Shirene Willis Brantley
Senior Petitions Attorney
Office of Petitions
Office of the Deputy Commissioner
for Patent Examination Policy

UNITED STATES PATENT AND TRADEMARK OFFICE

COMMISSIONER FOR PATENTS
UNITED STATES PATENT AND TRADEMARK OFFICE
WASHINGTON, D.C. 20231
www.uspto.gov

MAIL

Paper No. 3

JUL 1 5 2003

DIRECTOR OFFICE
TECHNOLOGY CENTER 2100

FISH & RICHARDSON P.C.
225 Franklin Street
Boston, MA 02110-2804

In re Application of: Peter Szpak, et al.	)	
Application No. 09/876,487	)	
Filed: June 7, 2001	)	**DECISION ON REQUEST FOR**
For: GENERATING CODE FOR DATA	)	**WITHDRAWAL AS ATTORNEY**
REFERENCES	)	

This is a decision on the Request To Withdraw from Representation filed June 11, 2003.

A grantable request to withdraw as attorney of record should indicate thereon the present mailing addresses of the attorney(s) who is/are withdrawing from the record and of the applicant. The request for withdrawal must be signed by every attorney seeking to withdraw or contain a clear indication that one attorney is signing on behalf of another/others. A request to withdraw will not be approved unless at least 30 (thirty) days would remain between the date of approval and the later of the expiration date of a time to file a response or the expiration date of the maximum time period which can be extended under 37 C.F.R. § 1. 136(a). The effective date of withdrawal being the date of decision and not the date of request. See M.P.E.P. § 402.06. 37 C.F.R. § 1.36 further requires that the applicant or patent owner be notified of the withdrawal of the attorney or agent.

The request is **GRANTED**.

All future communications from the Office will be directed to the below-listed address until otherwise notified by applicant. This correspondence address is provided by the withdrawn attorney(s). Applicant is reminded of the obligation to promptly notify the Patent and Trademark Office (Office) of any change in correspondence address to ensure receipt of all communications from the Office.

For Vincent N. Trans
Special Programs Examiner
Technology Center 2100
Computer Architecture and Software
(703) 305-9750

cc: Thomas V. Smurzynski, Esq.
Lahive & Cockfield LLP
28 State Street
Boston, MA 02109-1784

UNITED STATES PATENT AND TRADEMARK OFFICE

Commissioner for Patents
United States Patent and Trademark Office
P.O. Box 1450
Alexandria, VA 22313-1450
www.uspto.gov

MOTOROLA INC
600 NORTH US HIGHWAY 45
ROOM AS437
LIBERTYVILLE IL 60048-5343

COPY MAILED

MAY 0 5 2006

OFFICE OF PETITIONS

In re Application of	:	
Philip H. Burrus, IV	:	
Application No. 09/876,504	:	ON PETITION
Filed: June 7, 2001	:	
Attorney Docket No. EN11309	:	

This is a decision on the petition to revive under 37 CFR 1.137(b), filed April 7, 2006.

The petition under 37 CFR 1.137(b) is **GRANTED**.

The above-identified application became abandoned for failure to timely file a reply in response to the non-final Office action mailed June 30, 2005. This Office action set a shortened statutory period for reply of three (3) months. No extensions of time under 37 CFR 1.136(a) were obtained. No reply having been received, the above identified application became abandoned on October 1, 2005. A Notice of Abandonment was mailed on March 8, 2006.

With the instant petition, applicant paid the petition fee, made the proper statement of unintentional delay, and submitted the proper reply in the form of an amendment.

The file does not indicate a change of address has been submitted, although the address given on the petition differs from the address of record. If appropriate, a change of address should be filed in accordance with MPEP 601.03. A courtesy copy of this decision is being mailed to the address given on the

petition; however, the Office will mail all future correspondence solely to the address of record.

The application file is being forwarded to Group Art Unit 3622 for consideration of the amendment filed April 7, 2006.

Telephone inquiries related to this decision should be directed to the undersigned at (571)272-3207.

Cliff Congo
Petitions Attorney
Office of Petitions

cc: Philip H. Burrus, IV
460 Grant Street, SE
Atlanta, GA 30312

UNITED STATES PATENT AND TRADEMARK OFFICE

COMMISSIONER FOR PATENTS
UNITED STATES PATENT AND TRADEMARK OFFICE
P.O. BOX 1450
ALEXANDRIA, VA 22313-1450
www.uspto.gov

FISH & RICHARDSON P.C.
225 FRANKLIN STREET
BOSTON, MA 02110

COPY MAILED

FEB 0 2 2007

OFFICE OF PETITIONS

In re Patent No. 7,024,513 :
Issue Date: January 13, 1987 :
Application No. 09/876,530 : ON PETITION
Filed: April 4, 2006 :
Attorney Docket No. 10449-036001 :

This is a decision on the petition under 37 CFR 1.182, filed July 24, 2006, requesting issuance of a duplicate Letters Patent for the above-identified patent.

It is noted that petitioner submitted a petition fee of $130. Since the requisite petition fee is $400, the $270 balance of the petition fee is being charged to counsel's deposit account as authorized.

The petition is **granted**.

The Publishing Division is directed to issue duplicate Letters Patent.

Any questions concerning this matter may be directed to the undersigned at (571) 272-3204. Any questions concerning issuance of the duplicate Letters Patent should be directed to Krystal Paige at (703) 308-9250, Ext. 139.

A copy of this decision is being faxed to Publishing Division for issuance of a duplicate Letters Patent.

Sherry D. Brinkley
Petitions Examiner
Office of Petitions

cc: Krystal Paige, P/OPPD, South Tower, 8th Floor, Room C-32 (FAX 571-270-9937)

UNITED STATES PATENT AND TRADEMARK OFFICE

Commissioner for Patents
United States Patent and Trademark Office
P.O. Box 1450
Alexandria, VA 22313-1450
www.uspto.gov

IAN F. BURNS & ASSOCIATES
P.O. BOX 71115
RENO, NV 89570

COPY MAILED

JUN 09 2006

OFFICE OF PETITIONS

In re Application of

Bradley W. Johnson

Application No. 09/876,546

Filed: June 6, 2001

Attorney Docket No720.379

DECISION ON PETITION

This is a decision on the petition under 37 CFR 1.137(b), filed February 13, 2006, to revive the above-identified application.

The petition is **GRANTED**.

The above-cited application became abandoned for failure to reply in a timely manner to the non-final Office action mailed December 23, 2004, which set a shortened statutory period for reply of three (3) months. No extensions of time were obtained within the allowable period. Accordingly, the application became abandoned on March 23, 2005.

The above-identified application has been abandoned for an extended period of time. The Patent and Trademark Office is relying on petitioner's duty of candor and good faith and accepting the statement that the entire delay in filing the required reply form the due date for the reply until the filing of a grantable petition pursuant to 37 CFR 1.137(b) was unintentional. See Changes to Patent Practice and Procedure, 62 Fed. Reg. at 53160 and 53178; 1203 Off. Gaz. Pat. Office at 88 and 103 (responses to comments 64 and 109) (applicant obligated under 37 CFR 10.18 to inquire into the underlying facts and circumstances when providing the statement required by 37 CFR 1.137(b) to the Patent and Trademark Office.

The amendment filed February 13, 2006, is noted and made of record.

The application is being forwarded to Technology Center 3700, GAU 3713 for further processing.

Telephone inquiries concerning this decision should be directed to the undersigned at (571) 272-3222.

Kenya A. McLaughlin
Petitions Attorney
Office of Petitions

#15
DW

UNITED STATES PATENT AND TRADEMARK OFFICE

UNDER SECRETARY OF COMMERCE FOR INTELLECTUAL PROPERTY AND
DIRECTOR OF THE UNITED STATES PATENT AND TRADEMARK OFFICE
WASHINGTON, DC 20231
www.uspto.gov

JAN 14 2003

MAILED

JAN 14 2003

Office of the Director
Group 3600

WORKMAN NYDEGGER & SEELEY
1000 EAGLE GATE TOWER
60 EAST SOUTH TEMPLE
SALT LAKE CITY, UT 84111

In re application of
Pericles P. Deavila
Application No. 09/876,550
Filed: June 7, 2001
For: MOBILE SAFETY COMPLIANCE APPARATUS

DECISION ON REQUEST FOR WITHDRAWAL OF ATTORNEY

This is a decision on the request filed on December 23, 2002, under 37 CFR 1.36 and MPEP 402.06, requesting permission to withdraw as the attorney of record in the above-identified application.

The request is **NOT APPROVED**.

Under 37 CFR 1.36 an attorney may withdraw only upon application to and approval by the Commissioner. It should be noted that a withdrawal is effective when approved, not when filed. Besides giving due notice to his or her client and delivering to the client all papers and property to which the client is entitled as specified under 37 CFR 10.40, approval of such a request requires that the following conditions be met:

A) Each attorney of record must sign the notice of withdrawal, or the notice must contain a clear indication of one attorney signing on behalf of another, because the Office does not recognize law firms;

B) A proper reason for the withdrawal as enumerated in 37 CFR 10.40(b) or subsection (1)-(6) of 37 CFR 10.40(c) must be provided; and

C) If withdrawal is requested in accordance with 37 CFR 10.40(c) above, there must be at least 30 days between approval of the withdrawal and the later of the expiration date of a time period for reply or the expiration date of the period which can be obtained by a petition and fee for extension of time under 37 CFR 1.136(a).

The request to withdraw as attorney is not accepted in the above-identified application because the request lacks conditions A) and B) above.

As to condition A), attorneys and agents of Customer No. 22913 has been given Power of Attorney. These attorneys/agents have not been withdrawn. Further, the request is signed by an attorney who is not of record.

As to condition B), the reason given does appear to fall under any of the reasons acceptable under 37 CFR 10.40(b) or (c).

Kenneth J. Dorner
Special Programs Examiner
Patent Technology Center 3600
(703) 308-0866
Facsimile No.: (703) 605-0586

DK/dw: 01/10/03

UNITED STATES PATENT AND TRADEMARK OFFICE

Commissioner for Patents
United States Patent and Trademark Office
P.O. Box 1450
Alexandria, VA 22313-1450
www.uspto.gov

Paper No. 22

JOHN C. STRINGHAM
WORKMAN NYDEGGER & SEELEY
1000 EAGLE GATE TOWER
60 EAST SOUTH TEMPLE
SALT LAKE CITY, UT 84111

COPY MAILED
MAY 19 2004
OFFICE OF PETITIONS

In re Application of	:	ON PETITION
Pericles Deavila	:	
Application No. 09/876,550	:	
Filed: June 7, 2001	:	
Attorney Docket No. 25-19-101	:	

This is a decision on the petition under 37 CFR 1.137(b), filed May 10, 2004, to revive the above-identified application.

The petition is **GRANTED**.

The above-identified application became abandoned for failure to reply in a timely manner to the non-final Office action mailed May 23, 2003, which set a shortened statutory period for reply of three (3) months. No extensions of time under the provisions of 37 CFR 1.136(a) were obtained. Accordingly, the above-identified application became abandoned on August 24, 2003.

Telephone inquiries concerning this decision should be directed to Irvin Dingle at (703) 306-5684.

The application file is being forwarded to Technology Center AU 3618 for further processing.

Irvin Dingle
Petitions Examiner
Office of Petitions
Office of the Deputy Commissioner
for Patent Examination Policy

UNITED STATES PATENT AND TRADEMARK OFFICE

COMMISSIONER FOR PATENTS
UNITED STATES PATENT AND TRADEMARK OFFICE
P.O. BOX 1450
ALEXANDRIA, VA 22313-1450
www.uspto.gov

COPY MAILED

SEP 0 8 2003

OFFICE OF PETITIONS

FISH & RICHARDSON P.C.
45 ROCKEFELLER PLAZA, SUITE 2800
NEW YORK NY 10111

In re Application of
Hayes et al.
Application No. 09/876,563
Filed: June 7, 2001
Attorney Docket No. 12587-007001

:DECISION DISMISSING PETITION
:UNDER 37 CFR 1.182

This is in response to the "Petition under 37 CFR 1.182" to consider applicants previous "Request to Rescind Previous Nonpublication Request under 35 U.S.C. 122(b)(2)(B)(ii) filed on August 2, 2002", to be the notice of a subsequent foreign or International filing. The previously submitted "Request to Rescind" is not present in the file and two telephone calls were made to Mr. Frank Occhiuti in June to request information concerning that request. The copy of the previously submitted request submitted on May 27, 2003 is the only "Request to Rescind" in the application file.

The petition is Dismissed.

The petition includes a copy of the "Request to Rescind Previous Nonpublication Request," PTO/SB/36 (11-00), signed May 30, 2002 (previously submitted by petitioner), and blank copy of a "Request to Rescind Previous Nonpublication Request," PTO/SB/36 (10-01). Petitioner states that 35 U.S.C. § 122(b)(2)(B)(iii) does not specify a format in which the notice must be given, and that by filing of the rescission notice, applicant provided "*de facto* notice that one or more foreign or international filings have occurred or would be occurring." Petitioner then contends that the statutory requirement should be met by many forms of notice. Petitioner argues that the request to rescind should be treated as a notification of foreign filing. Petitioner argues that language added to the USPTO form for a Request to Rescind was already implicit in the previous version of the USPTO form, and that "the filing of a Request to Rescind is a tacit notice to the Director that the subject application is being filed internationally and/or in one or more foreign states." Furthermore, petitioner argues that since the only difference between the updated Request form and the original is that the updated Request describes the consequences of its filing in the Note that each form should be treated the same. Petitioner further argues that both versions of the form accomplish the same goal, which is subjecting the application to publication.

35 U.S.C. § 122(b)(2)(B) states:

> (i) If an applicant makes a request upon filing, certifying that the invention disclosed in the application has not and will not be the subject of an application filed in another country, or under a multilateral international agreement, that requires publication of applications 18 months after filing, the application shall not be published as provided in paragraph (1).
>
> (ii) An applicant may rescind a request made under clause (i) at any time.
>
> (iii) An applicant who has made a request under clause (i) but who subsequently files, in a foreign country or under a multilateral international agreement specified in clause (i), an application directed to the invention disclosed in the application filed in the Patent and Trademark Office, shall notify the Director of such filing not later than 45 days after the date of the filing of such foreign or international application. A failure of the applicant to

> provide such notice within the prescribed period shall result in the application being regarded as abandoned, unless it is shown to the satisfaction of the Director that the delay in submitting the notice was unintentional.

37 CFR 1.213 implements the provisions of 35 U.S.C. § 122(b)(2)(B).

Most patent applications filed on or after November 29, 2000 will be published, unless applicant files a request for nonpublication in compliance with 37 CFR 1.213(a). A nonpublication request is required to contain a certification that "the invention disclosed in the application has not been and will not be the subject of an application filed in another country, or under a multilateral international agreement that requires publication at eighteen months after filing." Applicants who do not plan to file in another country are not required to file such a certification, and given that provisional rights (see 35 U.S.C. § 154(d)) may be available to those who have their patent applications publish, some applicants who do not plan to file in another country may elect to have their application published to be eligible for provisional rights. As a result, the filing of a rescission of a nonpublication request does not imply that the invention has been or will be filed in another country, and instead suggests that applicant now desires to have the application published in the United States.

Furthermore, 35 U.S.C. § 122(b)(2)(B)(ii) addresses rescission. If all rescissions provided notice of foreign filing, then 35 U.S.C. § 122(b)(2)(B)(iii), which requires applicants to provide notice of foreign filing within a set time period, would have provided that the "rescission specified in clause (ii) must be filed no later than 45 days after the date of foreign filing." Instead, clause (iii) merely specified that an "applicant who has made a request under clause (i)...shall notify the Director of such filing no later than 45 days after the date of such filing" and does not itself require such an applicant to rescind the nonpublication request. Implicit in providing notice of foreign filing is a rescission of the nonpublication request, but not *vice versa*. Thus the statute clearly identifies rescission of a nonpublication request and notification of a foreign filing as two separate acts, and a rescission in and of itself cannot be construed as notice of foreign filing.

The rules and statutory provisions governing the operations of the U.S. Patent and Trademark Office require payment of a fee on filing each petition. *See* 35 U.S.C. § 41(a)(7). Accordingly, as authorized, the required $130 petition fee will be charged to Deposit Account No. 06-1050.

Any inquiries concerning this decision may be directed to Mark Polutta at (703) 308-8122.

This application is being forwarded to Technology Center Art Unit 3629 to await further examination in due course.

Joni Y. Chang

Joni Chang
Legal Advisor
Office of Patent Legal Administration
Office of the Deputy Commissioner
for Patent Examination Policy

Attachment: Notice Regarding Rescission of Nonpublication Request

UNITED STATES PATENT AND TRADEMARK OFFICE

Commissioner for Patents
United States Patent and Trademark Office
P.O. Box 1450
Alexandria, VA 22313-1450
www.uspto.gov
DIW 02-05

FISH & RICHARDSON P.C.
225 FRANKLIN STREET
BOSTON MA 02110

COPY MAILED

FEB 07 2005

OFFICE OF PETITIONS

In re Application of	:	
Hayes et al.	:	
Application No. 09/876,563	:	DECISION GRANTING PETITION
Filed: 7 June, 2001	:	
Attorney Docket No. 12587-007001	:	

This is a decision on the petition, filed on 20 December, 2004, under 37 CFR 1.137(f) which is treated as a petition to revive the above-identified nonprovisional application under the unintentional provisions of 37 CFR 1.137(b).

The petition is **GRANTED**.

Petitioners state that the present nonprovisional application is the subject of a foreign or international application filed on 5 June, 2002. However, the U.S. Patent and Trademark Office was unintentionally not notified of this filing within 45 days subsequent to the filing of the subject application in a foreign country.

In view of the above, this application became abandoned pursuant to 35 U.S.C. § 122(b)(2)(B)(iii) and 37 CFR 1.213(c) for failure to timely notify the Office of the filing of an application in a foreign country, or under a multilateral international agreement, that requires publication of applications 18 months after filing.

A petition under 37 CFR 1.137(f) must be accompanied by:

(1) the reply which is met by the notification of such filing in a foreign country or under a multinational treaty;
(2) the petition fee as set forth in 37 CFR 1.17(m); and
(3) a statement that the entire delay in filing the

required reply from the due date of the reply until the filing of a grantable petition was unintentional.

The present petition has been found to be in compliance with 37 CFR 1.137(f). Accordingly, the failure to timely notify the Office of a foreign or international filing within 45 days after the date of filing of such foreign or international application as provided by 35 U.S.C. § 122(b)(2)(B)(i) has been rescinded. It is noted that petitioner filed a Request to Rescind the Nonpublication Request on 27 May, 2003. A Communication Regarding Rescission of Nonpublication Request and/or Notice of Foreign Filing, showing the projected publication date of 16 October, 2003, was mailed on 8 July, 2003.

This application is being forwarded to Technology Center Art Unit 3625 for further processing.

Any inquiries concerning this decision may be directed to the undersigned at 571.272.3231.

Douglas I. Wood
Senior Petitions Attorney
Office of Petitions

SPE: M. Barr

SPE RESPONSE FOR CERTIFICATE OF CORRECTION

Paper No.: _____

DATE : 3/16/02

TO SPE OF : ART UNIT 1746

SUBJECT : Request for Certificate of Correction for Appl. No.: 09/876,562 Patent No.: 7097673

Please respond to this request for a certificate of correction within 7 days.

Please review the requested changes/corrections as shown in the **COCIN** document(s) in the IFW application image. No new matter should be introduced, nor should the scope or meaning of the claims be changed.

Please complete the response (see below) and forward the completed response to scanning using document code **COCX**.

Lamonte M. Newsome
Certificates of Correction Branch
703-308-9390 ext. 112

Thank You For Your Assistance

The request for issuing the above-identified correction(s) is hereby:
Note your decision on the appropriate box.

- ☒ **Approved** — All changes apply.
- ☐ **Approved in Part** — Specify below which changes **do not** apply.
- ☐ **Denied** — State the reasons for denial below.

Comments: _____

Jonathan Crepeau (Acting) — **SPE**

1745 — **Art Unit**

UNITED STATES PATENT AND TRADEMARK OFFICE

COMMISSIONER FOR PATENTS
UNITED STATES PATENT AND TRADEMARK OFFICE
WASHINGTON, D.C. 20231
www.uspto.gov

Paper No. 6

AGILENT TECHNOLOGIES, INC.
Legal Department, DL429
Intellectual Property Administration
P. O. Box 7599
Loveland CO 80537-0599

COPY MAILED

AUG 0 9 2002

OFFICE OF PETITIONS

ON PETITION

In re Application of
Myerson, et al.
Application No. 09/876,589
Filed: June 7, 2001
Title: GENERIC CAPTURE PROBE ARRAYS

This is a decision on the April 8, 2002 petition under 37 CFR 1.181, which will be treated as a petition to withdraw the holding of abandonment.

The petition is **DISMISSED**.

Any request for reconsideration of this decision must be submitted within TWO (2) MONTHS from the mail date of this decision. Extensions of time under 37 CFR 1.136(a) are permitted. The reconsideration request should include a cover letter entitled "Renewed Petition under 37 CFR 1.181". This is not a final agency decision.

This application became abandoned on December 7, 2001 for failure to file a timely response to the September 6, 2001 notice to file missing parts of nonprovisional application, which set a two (2) month shortened statutory period for reply. The notice stated that the declaration was unsigned and that substitute drawings were required.

Petitioner filed a reply consisting of a declaration on October 22, 2001. However, the reply did not contain the drawings required by the notice.

Accordingly, on March 8, 2002, the office mailed a notice of incomplete reply. The notice did not reset the time allotted for replying.

Petitioner asserts the following reason for the delay: the notice mailed on March 8, 2002, was received too late to allow a timely response. Accordingly, Petitioner asks for a new period for replying to the notice.

This assertion does not warrant the relief requested.

Although the USPTO attempts to notify parties as to defective papers in order to permit timely refiling, it has no obligation to do so.[1] Rather, it is the applicants who are ultimately responsible for filing proper documents.[2] That is, applicants were given Notice that their application lacked the requisite drawings. That Petitioner did not notice this is unfortunate,

---

[1] See In re Colombo, Inc., 33 USPQ2d 1530, 1532 (Comm'r Pat. 1994).

[2] Id.

but it did not relieve Petitioner of the duty of responding fully to the notice. The failure to supply the proper reply was the fault of petitioners, not the USPTO. As noted in *Brenner v. Ebbert*:[3]

> "The Constitution requires notice reasonably designed to forewarn against approaching default; but it does not insure against the effects of a mistaken response to timely notice knowingly received."

It follows that petitioners had received the reasonable notice required so as to ensure a timely and full response to the Notice. That petitioners failed to timely and adequately respond was unfortunate, but such failure did not operate to save this application from abandonment, nor does the failure to properly reply entitle Petitioner to a new time deadline.[4]

ALTERNATIVE VENUE

Petitioner may wish to consider filing a renewed petition under 37 CFR 1.137(b)[5], which now provides that where the delay in reply was unintentional, a petition may be filed to revive an abandoned application or a lapsed patent pursuant to 37 CFR 1.137(b).

The filing of a petition under the unintentional standard cannot be intentionally delayed and therefore should be filed promptly. A person seeking revival due to unintentional delay cannot make a statement that the delay was unintentional unless the entire delay, including the delay from the date it was discovered that the application was abandoned until the filing of the petition to revive under 37 CFR 1.137(b), was unintentional. A statement that the delay was unintentional is not appropriate if petitioner intentionally delayed the filing of a petition for revival under 37 CFR 1.137(b).

---

[3]398 F.2d 762, 765, 157 USPQ 609, 611 (D.C. Cir. 1968), cert. den., 159 USPQ 799.

[4]See Brenner, supra.

[5]Effective December 1, 1997, the provisions of 37 CFR 1.137(b) now provide that where the delay in reply was unintentional, a petition may be filed to revive an abandoned application or a lapsed patent pursuant to 37 CFR 1.137(b). A grantable petition filed under the provisions of 37 CFR 1.137(b) must be accompanied by:

(1) the required reply, unless previously filed. In a nonprovisional application abandoned for failure to prosecute, the required reply may be met by the filing of a continuing application. In an application or patent, abandoned or lapsed for failure to pay the issue fee or any portion thereof, the required reply must be the payment of the issue fee or any outstanding balance thereof.

(2) the petition fee as set forth in 37 CFR 1.17(m);

(3) a statement that the entire delay in filing the required reply from the due date for the reply until the filing of a grantable petition pursuant to 37 CFR 1.137(b) was unintentional. The Commissioner may required additional information where there is a question whether the delay was unintentional; and

(4) any terminal disclaimer (and fee as set forth in 37 CFR 1.20(d)) required pursuant to 37 CFR 1.137(c)).

Further correspondence with respect to this matter should be addressed as follows:

By mail: Commissioner of Patents and Trademarks
Box DAC
Washington, D.C. 20231

By FAX: (703)308-6916
Attn: Office of Petitions

By hand: Crystal Plaza Four, Suite CP4\-3C23
2201 South Clark Place
Arlington, VA 22202

Telephone inquiries concerning this matter may be directed to the undersigned at (703) 306-5593.

Scott M. Ledford
Senior Attorney
Office of Petitions
Office of the Deputy Assistant Commissioner
for Patent Policy and Projects

UNITED STATES PATENT AND TRADEMARK OFFICE

Commissioner for Patents
United States Patent and Trademark Office
Washington, D.C. 20231
www.uspto.gov

Paper No. 9

AGILENT TECHNOLOGIES, INC.
Legal Department, DL429
Intellectual Property Administration
P. O. Box 7599
Loveland CO 80537-0599

COPY MAILED

SEP 19 2002

OFFICE OF PETITIONS

In re Application of	:	
Joel Myerson and Jeffery R. Sampson	:	
Application No. 09/876,589	:	
Filed: June 7, 2001	:	DECISION ON PETITION
Attorney Docket No. PD10980906	:	
Title: GENERIC CAPTURE PROBE ARRAYS	:	

This is a decision on the petition filed on August 23, 2002, pursuant to 37 C.F.R. §1.137(b)[1], to revive the above-identified application.

The petition is **GRANTED**.

The above-identified application became abandoned for failure to reply in a timely manner to the Notice of Incomplete Reply (Notice), mailed March 8, 2002[2]. No response was received, and no extensions of time under the provisions of 37 C.F.R. §1.136(a) were requested. Accordingly, the above-identified application became abandoned on November 7, 2001.

37 C.F.R. §1.137(b)(3) requires a statement that the entire delay in filing the required reply from the due date for the reply until the filing of a grantable petition pursuant to 37 C.F.R. §1.137(b) was unintentional. Since the statement contained in the instant petition varies from the language

1 A grantable petition pursuant to 37 CFR 1.137(b) must be accompanied by:
(1) The reply required to the outstanding Office action or notice, unless previously filed;
(2) The petition fee as set forth in § 1.17(m);
(3) A statement that the entire delay in filing the required reply from the due date for the reply until the filing of a grantable petition pursuant to this paragraph was unintentional. The Commissioner may require additional information where there is a question whether the delay was unintentional, and;
(4) Any terminal disclaimer (and fee as set forth in § 1.20(d)) required pursuant to paragraph (d) of this section.

2 On September 6, 2001, a Notice to File Missing Parts was mailed to the applicant, which indicated a period of response of two months. On February 6, 2002, a response was received. The Notice indicated that substitute drawings were still required. The Notice did not extend the time period for response.

required by 37 C.F.R. §1.137(b)(3), the statement contained in the instant petition is being construed as the statement required by 37 C.F.R. §1.137(b)(3) and petitioner must notify the Office if this is not a correct interpretation of the statement contained in the instant petition.

With the instant petition, the petitioner has met the requirements to revive the above-identified application, pursuant to 37 CFR 1.137(b). Petitioner submitted the required reply in the form of the filing of substitute drawings, the payment of the petition fee, and has made a statement which is being construed as the proper statement of unintentional delay.

The application file is being forwarded to Technology Center 1600 for further processing.

Telephone inquiries should be directed to Petitions Attorney Paul Shanoski at (703) 305-0011.

Paul Shanoski
Petitions Attorney
Office of Petitions
Office of the Deputy Commissioner
for Patent Examination Policy

UNITED STATES PATENT AND TRADEMARK OFFICE

Commissioner for Patents
United States Patent and Trademark Office
P.O. Box 1450
Alexandria, VA 22313-1450
www.uspto.gov

SMYRSKI LAW GROUP A PROFESSIONAL CORPORATION
3310 AIRPORT AVENUE SW
SANTA MONICA CA 90405

COPY MAILED

MAR 26 2007

OFFICE OF PETITIONS

In re Application of	:	
Lipton, et al.	:	
Application No. 09/876,630	:	DECISION ON PETITION
Filed: June 7, 2001	:	
Attorney Docket No. 300.66	:	

This is a decision on the petition to withdraw the holding of abandonment under 37 CFR 1.181, filed February 16, 2007.

The petition is **GRANTED**.

The above-identified application became abandoned for failure to timely file a reply in response to the Notice of Non-Compliant Appeal Brief, mailed April 4, 2006. This Notice set an extendable period for reply of one (1) month. No reply having been received, the application became abandoned on May 5, 2006. A Notice of Abandonment was mailed on January 9, 2007.

Petitioner argues that the Notice of Non-Compliant Amendment was mailed to the incorrect address. In support thereof, petitioner has supplied a copy of a Power of Attorney, together with a USPTO date stamped postcard receipt showing that the Power of Attorney was filed on September 19, 2005.

In view thereof, **the holding of abandonment is withdrawn.**

The matter is being forwarded to Group Art Unit 2621 for re-mailing of the Notice of Non-Compliant Appeal Brief, setting a new period for reply.

Telephone inquiries regarding this decision should be directed to the undersigned at (571)272-3207.

Cliff Congo
Petitions Attorney
Office of Petitions

UNITED STATES PATENT AND TRADEMARK OFFICE

Commissioner for Patents
United States Patent and Trademark Office
P.O. Box 1450
Alexandria, VA 22313-1450
www.uspto.gov

COPY MAILED

AUG 3 0 2005

OFFICE OF PETITIONS

GERALD B ROSENBERG
NEW TECH LAW
285 HAMILTON AVE
SUITE 520
PALO ALTO CA 94301

In re Application of
BUNNEL
Application No.: 09/876,675
Attorney Docket No.: LYNNX2008

: DECISION on PETITION
:
: UNDER 37 CFR 1.137(b)
:

This is a decision on the petition under 37 CFR 1.137(b), filed February 28, 2005 to revive the above-identified application.

The petition is **GRANTED**.

The above-identified application became abandoned for failure to reply in a timely manner to the non-final Office action mailed May 21, 2004, which set a shortened statutory period for reply of three (3) months. No extensions of time under the provisions of 37 CFR 1.136(a) were obtained. Accordingly, by operation of law, the above-identified application became abandoned at midnight on August 21, 2004.

The petition satisfies the conditions for revival pursuant to the provisions of 37 CFR 1.137(b) in that (1) the reply in the form of an amendment, (2) the petition fee; and (3) the required statement of unintentional delay have been received. Accordingly, the reply to the non-final Office action of May 21, 2004 is accepted as having been unintentionally delayed.

A Request for Continued Examination (RCE) cannot be filed until such time as the Office action has been made final or prosecution is closed. The non-final Office action mailed on May 21, 2004 was a first Office action and did not close prosecution. Thus, the Request for Continued Examination (RCE) filed on February 28, 2005 is improper and will not be entered.

The application is being referred to Technology Center AU 2682.

Telephone inquiries concerning this decision should be directed to Cynthia Kratz at (571) 272-3286 or in her absence, the undersigned at (571) 272-3217.

Frances Hicks for
Brian Hearn
Petitions Examiner
Office of Petitions

UNITED STATES PATENT AND TRADEMARK OFFICE

Commissioner for Patents
United States Patent and Trademark Office
P.O. Box 1450
Alexandria, VA 22313-1450
www.uspto.gov

The Marbury Law Group, PLLC
11800 SUNRISE VALLEY DRIVE
SUITE 1000
RESTON VA 20191

MAILED

NOV 1 2 2009

OFFICE OF PETITIONS

In re Application of	:	
Metod Lebar	:	
Application No. 09/876,677	:	DECISION GRANTING PETITION
Filed: June 7, 2001	:	UNDER 37 CFR 1.313(c)(2)
Attorney Docket No. 2816-062	:	

This is a decision on the petition under 37 CFR 1.313(c)(2), filed, November 10, 2009 to withdraw the above-identified application from issue after payment of the issue fee.

The petition is **GRANTED**.

The above-identified application is withdrawn from issue for consideration of a submission under 37 CFR 1.114 (request for continued examination). *See* 37 CFR 1.313(c)(2).

Petitioner is advised that the issue fee paid on September 1, 2009 cannot be refunded. If, however, this application is again allowed, petitioner may request that it be applied towards the issue fee required by the new Notice of Allowance.[1]

Telephone inquiries should be directed to Terri Johnson at (571) 272-2991.

This application is being referred to Technology Center AU 2424 for processing of the request for continued examination under 37 CFR 1.114 and for consideration of the concurrently filed information disclosure statement.

Terri Johnson
Petitions Examiner
Office of Petitions

---

[1] *The request to apply the issue fee to the new Notice may be satisfied by completing and returning the new Part B – Fee(s) Transmittal Form (along with any balance due at the time of submission). Petitioner is advised that the Issue Fee Transmittal Form* ***must*** *be completed and timely submitted to avoid abandonment of the application.*

UNITED STATES PATENT AND TRADEMARK OFFICE

Commissioner for Patents
United States Patent and Trademark Office
P.O. Box 1450
Alexandria, VA 22313-1450
www.uspto.gov

MYRON COHEN, ESQ.
COHEN, PONTANI, LIEBERMAN & PAVANE
551 FIFTH AVENUE, SUITE 1210
NEW YORK, NY 10176

COPY MAILED
JUL 0 3 2006
OFFICE OF PETITIONS

In re Application of	:	
Powers, Arthur C.	:	DECISION ON PETITION
Application No. 09/876,687	:	TO WITHDRAW
Filed: June 7, 2001	:	FROM RECORD
Attorney Docket No. 3415-10	:	

This is a decision on the Request to Withdraw as attorney or agent of record under 37 C.F.R.§ 1.36(b), filed May 1, 2006.

The request is **APPROVED**.

A grantable request to withdraw as attorney/agent of record must be signed by every attorney/agent seeking to withdraw or contain a clear indication that one attorney is signing on behalf of another/others. A request to withdraw will not be approved unless at least 30 (thirty) days would remain between the date of approval and the later of the expiration date of a time to file a response or the expiration date of the maximum time period which can be extended under 37 C.F.R. § 1.136(a).

The request was signed by Martin B. Pavane on behalf of all attorneys of record.

All attorneys/agents of record have been withdrawn. Applicant is reminded that there is no attorney of record at this time.

All future correspondence will be directed to the first named inventor, Arthur C. Powers, at the address indicated below.

The application became abandoned for failure to timely reply to the Office action mailed December 29, 2005.

Telephone inquires concerning this decision should be directed to Petitions Examiner Liana Chase at (571) 272-3206. All other inquires concerning either the examination or status of the application should be directed to the Technology Center.

for David Bucci
Petitions Examiner
Office of Petitions

Cc:

ARTHUR C. POWERS
P.O. BOX 1009
NEW YORK, NY 10128

UNITED STATES PATENT AND TRADEMARK OFFICE

Commissioner for Patents
United States Patent and Trademark Office
P.O. Box 1450
Alexandria, VA 22313-1450
www.uspto.gov

FAEGRE & BENSON LLP
PATENT DOCKETING
2200 WELLS FARGO CENTER
90 SOUTH 7TH STREET
MINNEAPOLIS, MN 55402-3901

COPY MAILED

JAN 24 2005

OFFICE OF PETITIONS

In re Application of	:	
Jo Johnson	:	
Application No. 09/876,693	:	ON PETITION
Filed: June 7, 2001	:	
Attorney Docket No. 56578-308393	:	

This is a decision on the petition under 37 CFR 1.137(b), filed August 16, 2004, to revive the above-identified application.

The petition is **GRANTED.**

The above-identified application became abandoned for failure to reply in a timely manner to the Notice to File Missing Parts of Nonprovisional Application mailed August 9, 2001. The Notice set a period for reply of two (2) months from the mail date of the Notice. No extensions of time under the provisions of 37 CFR 1.136(a) were obtained. Accordingly, the above-identified application became abandoned on October 10, 2001.

The Power of Attorney and Change of Correspondence Address has been accepted and recorded.

Telephone inquiries concerning this decision should be directed to the undersigned at (571) 272-3229.

The application file is being forwarded to the Office of Initial Patent Examination for further processing.

Retta Williams

Retta Williams
Petitions Examiner
Office of Petitions
Office of the Deputy Commissioner
for Patent Examination Policy

UNITED STATES PATENT AND TRADEMARK OFFICE

Commissioner for Patents
United States Patent and Trademark Office
P.O. Box 1450
Alexandria, VA 22313-1450
www.uspto.gov

FAEGRE & BENSON LLP
2200 WELLS FARGO CENTER
90 SOUTH SEVENTH STREET
MINNEAPOLIS, MN 55402-3901

COPY MAILED

JAN 2 1 2005

OFFICE OF PETITIONS

In re Application of :
Jo Johnson :
Application No. 09/876,693 :
Filed: June 7, 2001 :
Attorney Docket No. 56578/308393 :

ON PETITION

This is a notice regarding your request for acceptance of a fee deficiency submission under 37 CFR 1.28. On September 1, 1998, the Court of Appeals for the Federal Circuit held that 37 CFR 1.28(c) is the sole provision governing the time for correction of the erroneous payment of the issue fee as a small entity. **See DH Technology v. Synergystex International, Inc. 154 F.3d 1333, 47 USPQ2d 1865 (Fed. Cir. Sept. 1, 1998).**

The Office no longer investigates or rejects original or reissue applications under 37 CFR 1.56. **1098 Off. Gaz. Pat. Office 502 (January 3, 1989)**. Therefore, nothing in this Notice is intended to imply that an investigation was done.

Your fee deficiency submission under 37 CFR 1.28 is hereby **ACCEPTED**.

Telephone inquiries concerning this decision should be directed to the undersigned at (571) 272-3229.

Retta Williams

Retta Williams
Petitions Examiner
Office of Petitions
Office of the Deputy Commissioner
for Patent Examination Policy

UNITED STATES PATENT AND TRADEMARK OFFICE

COMMISSIONER FOR PATENTS
UNITED STATES PATENT AND TRADEMARK OFFICE
WASHINGTON, D.C. 20231
www.uspto.gov

Paper No. 13

PERKINS COIE LLP
P.O. BOX 2168
MENLO PARK, CA 94026

COPY MAILED

APR 2 3 2003

OFFICE OF PETITIONS

In re Application of
Allen et al.
Application No. 09/876,707
Filed: June 7, 2001
Attorney Docket No. 55325.8148.US04

ON PETITION

This is a decision on the petition under 37 C.F.R. § 1.137(b), filed April 8, 2003, to revive the above-identified application.

The petition is **granted.**

This application became abandoned for failure to timely reply within three months to the final Office action mailed April 24, 2002. No extensions of time under the provisions of 37 CFR 1.136(a) were obtained. Accordingly, this application became abandoned on July 25, 2002. A Notice of Abandonment was mailed on March 26, 2003.

Petitioner has met the requirements to revive the above-identified application pursuant to 37 CFR 1.137(b).

The application is being forwarded to Technology Center 1600 for processing of the Request for Continued Examination under 37 CFR 1.114 filed with the instant petition.

Telephone inquiries should be directed to Program Assistant Liana Chase at (703) 306-0482.

Frances Hicks

Frances Hicks
Petitions Examiner
Office of Petitions
Office of the Deputy Commissioner
for Patent Examination Policy

PTO/SB/66 (03-09)
Approved for use through 03/31/2012. OMB 0651-0016
U.S. Patent and Trademark Office: U.S. DEPARTMENT OF COMMERCE
Under the Paperwork Reduction Act of 1995, no persons are required to respond to a collection of information unless it displays valid OMB control number.

PETITION TO ACCEPT UNINTENTIONALLY DELAYED PAYMENT OF MAINTENANCE FEE IN AN EXPIRED PATENT (37 CFR 1.378(c))

Patent Number	Issue Date (YYYY-MM-DD)	Application Number	Filing Date (YYYY-MM-DD)	Docket Number (if applicable)
6823203	2004-11-23	09876747	2001-06-07	

CAUTION: Maintenance fee (and surcharge, if any) payment must correctly identify: (1) the patent number and (2) the application number of the actual U.S. application leading to issuance of that patent to ensure the fee(s) is/are associated with the correct patent. 37 CFR 1.366(c) and (d).

SMALL ENTITY
☐ Patentee claims, or has previously claimed, small entity status. See 37 CFR 1.27.

LOSS OF ENTITLEMENT TO SMALL ENTITY STATUS
☐ Patentee is no longer entitled to small entity status. See 37 CFR 1.27(g)

NOT Small Entity		Small Entity	
Fee	Code	Fee	Code
◉ 3 ½ year	(1551)	○ 3 ½ year	(2551)
○ 7 ½ year	(1552)	○ 7 ½ year	(2552)
○ 11 ½ year	(1553)	○ 11 ½ year	(2553)

SURCHARGE
The surcharge required by 37 CFR 1.20(i)(2) (Fee Code 1558) must be paid as a condition of accepting unintentionally delayed payment of the maintenance fee.

MAINTENANCE FEE (37 CFR 1.20(e)-(g))
The appropriate maintenance fee must be submitted with this petition.

STATEMENT
THE UNDERSIGNED CERTIFIES THAT THE DELAY IN PAYMENT OF THE MAINTENANCE FEE TO THIS PATENT WAS UNINTENTIONAL

PETITIONER(S) REQUEST THAT THE DELAYED PAYMENT OF THE MAINTENANCE FEE BE ACCEPTED AND THE PATENT REINSTATED

THIS PORTION MUST BE COMPLETED BY THE SIGNATORY OR SIGNATORIES

37 CFR 1.378(d) states: "Any petition under this section must be signed by an attorney or agent registered to practice before the Patent and Trademark Office, or by the patentee, the assignee, or other party in interest."

I certify, in accordance with 37 CFR 1.4(d)(4) that I am

◉ An attorney or agent registered to practice before the Patent and Trademark Office

○ A sole patentee

○ A joint patentee; I certify that I am authorized to sign this submission on behalf of all the other patentees.

○ A joint patentee; all of whom are signing this e-petition

○ The assignee of record of the entire interest

Patent Practitioner			
A signature of the applicant or representative is required in accordance with 37 CFR 1.33 and 10.18. Please see 37 CFR 1.4(d) for the form of the signature			
Signature	/Michael E Marion/	Date (YYYY-MM-DD)	2009-05-18
Name	Michael E. Marion	Registration Number	32266

This collection of information is required by 37 CFR 1.378(c). The information is required to obtain or retain a benefit by the public which is to file (and by the USPTO to process) an application. Confidentiality is governed by 35 U.S.C. 122 and 37 CFR 1.11 and 1.14. This collection is estimated to take 1 hour to complete, including gathering, preparing, and submitting the completed application form to the USPTO. Time will vary depending upon the individual case. Any comments on the amount of time you require to complete this form and/ or suggestions for reducing this burden, should be sent to the Chief Information Officer, U.S. Patent and Trademark Office, U.S. Department of Commerce, P.O. Box 1450, Alexandria, VA 22313-1450. DO NOT SEND FEES OR COMPLETED FORMS TO THIS ADDRESS. **This form can only be used when in conjunction with EFS-Web. If this form is mailed to the USPTO, it may cause delays in reinstating the patent.**

Privacy Act Statement

The Privacy Act of 1974 (P.L. 93-579) requires that you be given certain information in connection with your submission of the attached form related to a patent application or patent. Accordingly, pursuant to the requirements of the Act, please be advised that: (1) the general authority for the collection of this information is 35 U.S.C. 2(b)(2); (2) furnishing of the information solicited is voluntary; and (3) the principal purpose for which the information is used by the U.S. Patent and Trademark Office is to process and/or examine your submission related to a patent application or patent. If you do not furnish the requested information, the U.S. Patent and Trademark Office may not be able to process and/or examine your submission, which may result in termination of proceedings or abandonment of the application or expiration of the patent.

The information provided by you in this form will be subject to the following routine uses:

1. The information on this form will be treated confidentially to the extent allowed under the Freedom of Information Act (5 U.S.C. 552) and the Privacy Act (5 U.S.C. 552a). Records from this system of records may be disclosed to the Department of Justice to determine whether the Freedom of Information Act requires disclosure of these records.

2. A record from this system of records may be disclosed, as a routine use, in the course of presenting evidence to a court, magistrate, or administrative tribunal, including disclosures to opposing counsel in the course of settlement negotiations.

3. A record in this system of records may be disclosed, as a routine use, to a Member of Congress submitting a request involving an individual, to whom the record pertains, when the individual has requested assistance from the Member with respect to the subject matter of the record.

4. A record in this system of records may be disclosed, as a routine use, to a contractor of the Agency having need for the information in order to perform a contract. Recipients of information shall be required to comply with the requirements of the Privacy Act of 1974, as amended, pursuant to 5 U.S.C. 552a(m).

5. A record related to an International Application filed under the Patent Cooperation Treaty in this system of records may be disclosed, as a routine use, to the International Bureau of the World Intellectual Property Organization, pursuant to the Patent Cooperation Treaty.

6. A record in this system of records may be disclosed, as a routine use, to another federal agency for purposes of National Security review (35 U.S.C. 181) and for review pursuant to the Atomic Energy Act (42 U.S.C. 218(c)).

7. A record from this system of records may be disclosed, as a routine use, to the Administrator, General Services, or his/her designee, during an inspection of records conducted by GSA as part of that agency's responsibility to recommend improvements in records management practices and programs, under authority of 44 U.S.C. 2904 and 2906. Such disclosure shall be made in accordance with the GSA regulations governing inspection of records for this purpose, and any other relevant (i.e., GSA or Commerce) directive. Such disclosure shall not be used to make determinations about individuals.

8. A record from this system of records may be disclosed, as a routine use, to the public after either publication of the application pursuant to 35 U.S.C. 122(b) or issuance of a patent pursuant to 35 U.S.C. 151. Further, a record may be disclosed, subject to the limitations of 37 CFR 1.14, as a routine use, to the public if the record was filed in an application which became abandoned or in which the proceedings were terminated and which application is referenced by either a published application, an application open to public inspections or an issued patent.

9. A record from this system of records may be disclosed, as a routine use, to a Federal, State, or local law enforcement agency, if the USPTO becomes aware of a violation or potential violation of law or regulation.

UNITED STATES PATENT AND TRADEMARK OFFICE

Commissioner for Patents
United States Patent and Trademark Office
P.O. Box 1450
Alexandria, VA 22313-1450
www.uspto.gov

In re Patent No. 6823203
Issue Date: November 23,2004
Application No. 09876747
Filed: June 7,2001
Attorney Docket No. US010391

:
:DECISION GRANTING PETITION
:UNDER 37 CFR 1.378(c)
:

This is a decision on the electronic petition, filed June 2,2009 ,under 37 CFR 1.378(c) to accept the unintentionally delayed payment of the 3.5 year maintenance fee for the above-identified patent.

The petition is **GRANTED**.

The maintenance fee is accepted, and the above-identified patent reinstated as of June 2,2009 .
This decision also constitutes notice that the fee has been accepted. An electronic copy of the petition and this decision has been created as an entry in the Image File Wrapper. Nevertheless, petitioner should print and retain an independent copy.

Telephone inquiries related to this electronic decision should be directed to the Electronic Business Center at 1-866-217-9197.

UNITED STATES PATENT AND TRADEMARK OFFICE

Commissioner for Patents
United States Patent and Trademark Office
P.O. Box 1450
Alexandria, VA 22313-1450
www.uspto.gov

Patent Department
Bayer Corporation
100 Bayer Road
Pittsburgh, PA 15205-9741

COPY MAILED

JUL 1 5 2005

OFFICE OF PETITIONS

In re Application of	:	
Jan L. Clatty	:	
Application No. 09/876,778	:	ON PETITION
Filed: June 7, 2001	:	
Attorney Docket No. Mo6418/MD-01-49-PU	:	

This is a decision on the petition under 37 CFR 1.137(b), filed March 7, 2005, to revive the above-identified application.

The petition is **GRANTED**.

The petition satisfies the requirements of 37 CFR 1.137(b) in that petitioner has supplied (1) the reply in the form of a Request for Continued Examination (RCE) under 37 CFR 1.114; (2) the petition fee of $1500; and (3) an adequate statement of unintentional delay.

This application is being revived for consideration of the RCE.

Telephone inquiries concerning this decision should be directed to the undersigned at (571) 272-3223.

The application file is being referred to Technology Center 1700.

Marianne E. Jenkins
Petitions Examiner
Office of Petitions

UNITED STATES PATENT AND TRADEMARK OFFICE

Commissioner for Patents
United States Patent and Trademark Office
P.O. Box 1450
Alexandria, VA 22313-1450
www.uspto.gov

COPY MAILED
NOV 06 2008

Kokka & Hsu, PC
200 Page Mill Road
Suite 103
Palo Alto, CA 94306

In re Application of	:	
Ronald A. Linyard, et. al.	:	
Application No. 09/876,788	:	ON PETITION
Filed: June 6, 2001	:	
Attorney Docket No. 6067-16203	:	

This is a decision on the petition under 37 CFR 1.137(b), filed on January 7, 2008, to revive the above-identified application.

The application became abandoned for failure to file a proper reply to the final Office action mailed February 22, 2007.

The petition satisfies the requirements of 37 CFR 1.137(b) in that petitioner has supplied (1) the reply in the form of a Request for Continued Examination (RCE) under 37 CFR 1.114, with the $790 filing fee and an amendment; (2) the petition fee of $1,540; and (3) a proper statement of unintentional delay. Therefore, the petition is **GRANTED.**

This application is being revived for consideration of the RCE.

A review of the record shows that the Office improperly accepted the Power of Attorney filed on April 10, 2008. In this regard, the document fails to contain a proper Statement under 37 CFR 3.73(b), which contains a breakdown of the chain of title from the original owners to the current assignee. Therefore, petitioner must submit a complete Statement under 37 CFR 3.73(b), which shows how Macromedia, Inc. acquired this application from Ehelp Corporation[1]. A blank Statement under 37 CFR 3.73(b) is enclosed with this decision.

[1] As required by 37 CFR 3.73(b)(1)(i), the documentary evidence of the chain of title from the original owner to the assignee was, or concurrently is being, submitted for recordation pursuant to 37 CFR 3.11.

Office records have been corrected to reflect the previous correspondence address of record for Customer Number 64107 (Kokka and Hsu, PC). If petitioner desires to receive future correspondence regarding this application, an appropriate Statement under 37 CFR 3.73(b) must be submitted. A courtesy copy of this decision is being mailed to petitioner. Nevertheless, all future correspondence regarding this application file will be directed solely to the address of record until otherwise instructed.

The application file is being referred to Technology Center Art Unit 2452, for processing of the RCE and for appropriate action by the Examiner in the normal course of business on the concurrently filed amendment.

Telephone inquiries concerning this decision should be directed to the undersigned at (571) 272-3226.

Andrea Smith
Petitions Examiner
Office of Petitions

Enclosure: Blank Statement under 37 CFR 3.73(b)b

cc: Robert C. Kowert
Meyertons, Hood, Kivlin, Kowert & Goetzel, P.C.
P.O. Box 398
Austin, TX 78767-0398

Privacy Act Statement

The **Privacy Act of 1974 (P.L. 93-579)** requires that you be given certain information in connection with your submission of the attached form related to a patent application or patent. Accordingly, pursuant to the requirements of the Act, please be advised that: (1) the general authority for the collection of this information is 35 U.S.C. 2(b)(2); (2) furnishing of the information solicited is voluntary; and (3) the principal purpose for which the information is used by the U.S. Patent and Trademark Office is to process and/or examine your submission related to a patent application or patent. If you do not furnish the requested information, the U.S. Patent and Trademark Office may not be able to process and/or examine your submission, which may result in termination of proceedings or abandonment of the application or expiration of the patent.

The information provided by you in this form will be subject to the following routine uses:

1. The information on this form will be treated confidentially to the extent allowed under the Freedom of Information Act (5 U.S.C. 552) and the Privacy Act (5 U.S.C 552a). Records from this system of records may be disclosed to the Department of Justice to determine whether disclosure of these records is required by the Freedom of Information Act.
2. A record from this system of records may be disclosed, as a routine use, in the course of presenting evidence to a court, magistrate, or administrative tribunal, including disclosures to opposing counsel in the course of settlement negotiations.
3. A record in this system of records may be disclosed, as a routine use, to a Member of Congress submitting a request involving an individual, to whom the record pertains, when the individual has requested assistance from the Member with respect to the subject matter of the record.
4. A record in this system of records may be disclosed, as a routine use, to a contractor of the Agency having need for the information in order to perform a contract. Recipients of information shall be required to comply with the requirements of the Privacy Act of 1974, as amended, pursuant to 5 U.S.C. 552a(m).
5. A record related to an International Application filed under the Patent Cooperation Treaty in this system of records may be disclosed, as a routine use, to the International Bureau of the World Intellectual Property Organization, pursuant to the Patent Cooperation Treaty.
6. A record in this system of records may be disclosed, as a routine use, to another federal agency for purposes of National Security review (35 U.S.C. 181) and for review pursuant to the Atomic Energy Act (42 U.S.C. 218(c)).
7. A record from this system of records may be disclosed, as a routine use, to the Administrator, General Services, or his/her designee, during an inspection of records conducted by GSA as part of that agency's responsibility to recommend improvements in records management practices and programs, under authority of 44 U.S.C. 2904 and 2906. Such disclosure shall be made in accordance with the GSA regulations governing inspection of records for this purpose, and any other relevant (*i.e.*, GSA or Commerce) directive. Such disclosure shall not be used to make determinations about individuals.
8. A record from this system of records may be disclosed, as a routine use, to the public after either publication of the application pursuant to 35 U.S.C. 122(b) or issuance of a patent pursuant to 35 U.S.C. 151. Further, a record may be disclosed, subject to the limitations of 37 CFR 1.14, as a routine use, to the public if the record was filed in an application which became abandoned or in which the proceedings were terminated and which application is referenced by either a published application, an application open to public inspection or an issued patent.
9. A record from this system of records may be disclosed, as a routine use, to a Federal, State, or local law enforcement agency, if the USPTO becomes aware of a violation or potential violation of law or regulation.

PTO/SB/96 (10-08)
Approved for use through 11/30/2008. OMB 0651-0031
U.S. Patent and Trademark Office; U.S. DEPARTMENT OF COMMERCE
Under the Paperwork Reduction Act of 1995, no persons are required to respond to a collection of information unless it displays a valid OMB control number.

STATEMENT UNDER 37 CFR 3.73(b)

Applicant/Patent Owner: _____

Application No./Patent No.: _____ Filed/Issue Date: _____

Entitled:

_____, a _____
(Name of Assignee) (Type of Assignee, e.g., corporation, partnership, university, government agency, etc.)

states that it is:

1. ☐ the assignee of the entire right, title, and interest; or
2. ☐ an assignee of less than the entire right, title and interest
(The extent (by percentage) of its ownership interest is _____ %)

in the patent application/patent identified above by virtue of either:

A. ☐ An assignment from the inventor(s) of the patent application/patent identified above. The assignment was recorded in the United States Patent and Trademark Office at Reel _____, Frame _____, or for which a copy therefore is attached.

OR

B. ☐ A chain of title from the inventor(s), of the patent application/patent identified above, to the current assignee as follows:

1. From: _____ To: _____

   The document was recorded in the United States Patent and Trademark Office at

   Reel _____, Frame _____, or for which a copy thereof is attached.

2. From: _____ To: _____

   The document was recorded in the United States Patent and Trademark Office at

   Reel _____, Frame _____, or for which a copy thereof is attached.

3. From: _____ To: _____

   The document was recorded in the United States Patent and Trademark Office at

   Reel _____, Frame _____, or for which a copy thereof is attached.

☐ Additional documents in the chain of title are listed on a supplemental sheet.

☐ As required by 37 CFR 3.73(b)(1)(i), the documentary evidence of the chain of title from the original owner to the assignee was, or concurrently is being, submitted for recordation pursuant to 37 CFR 3.11.

[NOTE: A separate copy (*i.e.*, a true copy of the original assignment document(s)) must be submitted to Assignment Division in accordance with 37 CFR Part 3, to record the assignment in the records of the USPTO. See MPEP 302.08]

The undersigned (whose title is supplied below) is authorized to act on behalf of the assignee.

_____ _____
Signature Date

_____ _____
Printed or Typed Name Telephone Number

_____
Title

This collection of information is required by 37 CFR 3.73(b). The information is required to obtain or retain a benefit by the public which is to file (and by the USPTO to process) an application. Confidentiality is governed by 35 U.S.C. 122 and 37 CFR 1.11 and 1.14. This collection is estimated to take 12 minutes to complete, including gathering, preparing, and submitting the completed application form to the USPTO. Time will vary depending upon the individual case. Any comments on the amount of time you require to complete this form and/or suggestions for reducing this burden, should be sent to the Chief Information Officer, U.S. Patent and Trademark Office, U.S. Department of Commerce, P.O. Box 1450, Alexandria, VA 22313-1450. DO NOT SEND FEES OR COMPLETED FORMS TO THIS ADDRESS. **SEND TO: Commissioner for Patents, P.O. Box 1450, Alexandria, VA 22313-1450.**

If you need assistance in completing the form, call 1-800-PTO-9199 and select option 2.

UNITED STATES PATENT AND TRADEMARK OFFICE

Commissioner for Patents
United States Patent and Trademark Office
P.O. Box 1450
Alexandria, VA 22313-1450
www.uspto.gov

RENNER OTTO BOISSELLE & SKLAR, LLP
1621 EUCLID AVENUE
NINETEENTH FLOOR
CLEVELAND, OH 44115

COPY MAILED

JAN 1 8 2005

OFFICE OF PETITIONS

In re Application of :
Scott R. Gilbert :
Application No. 09/876,799 :
Filed: June 7, 2001 :
Attorney Docket No. AROOP9909USA :

ON PETITION

This is a decision on the petition under 37 CFR 1.137(b), filed January 12, 2004, to revive the above-identified application.

The petition is **GRANTED**.

The above-identified application became abandoned for failure to reply in a timely manner to the final Office action mailed April 9, 2003, which set a shortened statutory period for reply of three (3) months. A three-month extension of time under the provisions of 37 CFR 1.136(a) was obtained. On November 4, 2003, the USPTO mailed a Notice of Improper Request for Continued Prosecution Application (RCE) stating that the request was not accompanied by a submission as required by 37 CFR 1.114. Accordingly, the application became abandoned on October 10, 2003.

Since the filing of the RCE on October 16, 2003 (Certificate of Mailing dated October 9, 2003) was improper, as noted above, the $385 filing fee submitted is unnecessary. Accordingly, as authorized, the $385 filing fee submitted for the RCE will be credited to Deposit Account No. 18-0988.

Receipt is acknowledged of the Amendment filed January 12, 2004, with the instant petition.

Telephone inquiries concerning this decision should be directed to the undersigned at (571) 272-3229.

The application matter is being forwarded to Technology Center 3600, Art Unit 3643 for processing the Request for Continued Examination under 37 CFR 1.114 filed with the instant petition.

Retta Williams

Retta Williams
Petitions Examiner
Office of Petitions
Office of the Deputy Commissioner
for Patent Examination Policy

UNITED STATES PATENT & TRADEMARK OFFICE
Washington, D.C. 20231

REQUEST FOR PATENT FEE REFUND

1 Date of Request: 1-18-05 | 2 Serial/Patent # 09/876,799

3 Please refund the following fee(s):		4 PAPER NUMBER	5 DATE FILED	6 AMOUNT
	Filing			$
	Amendment			$
	Extension of Time			$
	Notice of Appeal/Appeal			$
	Petition			$
	Issue			$
	Cert of Correction/Terminal Disc.			$
	Maintenance			$
	Assignment			$
✓	Other RCE		10-16-03	$ 385.-

7 TOTAL AMOUNT OF REFUND $ 385

8 TO BE REFUNDED BY:

	Treasury Check
✓	Credit Deposit A/C #:

9 18--0988

10 REASON:

	Overpayment
	Duplicate Payment
✓	No Fee Due (Explanation):

RCE was improper

11 REFUND REQUESTED BY:

TYPED/PRINTED NAME: Retta Williams TITLE: Paralegal

SIGNATURE: Retta Williams PHONE: 272-3229

OFFICE: Petitions

****

THIS SPACE RESERVED FOR FINANCE USE ONLY:

APPROVED: Alicia Kelley DATE: 1/18/05

Instructions for completion of this form appear on the back. After completion, attach white and yellow copies to the official file and mail or hand-carry to:

Office of Finance
Refund Branch
Crystal Park One, Room 802B

FORM PTO 1577
(01/90)

Repln. Ref: 01/18/2005 AKELLEY 00855 [illegible]
DAN:180988 Nag/Number:09876799 $385.00 [illegible]
FC: 9204

UNITED STATES PATENT AND TRADEMARK OFFICE

COMMISSIONER FOR PATENTS
UNITED STATES PATENT AND TRADEMARK OFFICE
P.O. BOX 1450
ALEXANDRIA, VA 22313-1450
www.uspto.gov

Paper No.

Gary E. Parker
ZymoGenetics, Inc.
Patent Department
1201 Eastlake Avenue East
Seattle, WA 98102

COPY MAILED

SEP 27 2005

OFFICE OF PETITIONS

In re Application of	:	
Gilbert et al.	:	
Application No. 09/876,813	:	DECISION ON APPLICATION
Filed: June 6, 2001	:	FOR
Attorney Docket No. 99-19D1	:	PATENT TERM ADJUSTMENT
	:	

This is a decision on the "Application for Patent Term Adjustment Correction" filed May 19, 2005 (certificate of mailing dated May 12, 2005). Applicants request that the initial determination of patent term adjustment under 35 U.S.C. 154(b) be corrected from three hundred seventy-seven (377) days to four hundred nineteen (419) days.

The application for patent term adjustment is **DISMISSED**.

On February 16, 2005, the Office mailed the Determination of Patent Term Adjustment under 35 U.S.C. 154(b) in the above-identified application. The Notice stated that the patent term adjustment (PTA) to date is 377 days. The instant application for patent term adjustment was timely filed[1]. Applicants request an additional period of adjustment of 42 days for Office delay in not mailing a response under § 132 to their response filed November 3, 2003 until April 14, 2004. However, applicants acknowledge that the response as filed was non-compliant.

Applicants' argument is not well taken. In response to the amendment filed November 3, 2003, the Office mailed a Notice of

[1] PALM records indicate that the Issue Fee payment was received on May 16, 2005, after the certificate of mailing date of the instant application for patent term adjustment.

Non-compliant Amendment on November 20, 2003. Applicants filed a compliant amendment on December 15, 2003. In response to and within four months of the filing of the compliant amendment, the Office mailed a non-final Office action on April 14, 2004. Accordingly, it is concluded that there was no Office delay in taking action within the meaning of 1.703(a)(2).

In view thereof, the correct determination of patent term adjustment at the time of the mailing of the Notice of Allowance is three hundred seventy-seven (377) days.

The Office acknowledges receipt of the $200.00 fee set forth in 37 CFR 1.18(e). No additional fees are required.

The Office will forward the file to the Office of Patent Publication for issuance of the patent.

Telephone inquiries specific to this matter should be directed to Nancy Johnson, Senior Petitions Attorney, at (571) 272-3219.

Kery A. Fries

Kery A. Fries
Senior Legal Advisor
Office of Patent Legal Administration
Office of Deputy Commissioner
for Patent Examination Policy

SPE RESPONSE FOR CERTIFICATE OF CORRECTION

Paper No.: _____

DATE : June 23, 2006

TO SPE OF : ART UNIT 3739

SUBJECT : Request for Certificate of Correction for Appl. No.: 09/876831 Patent No.:6,832,997 B2

Please respond to this request for a certificate of correction within 7 days.

Please review the requested changes/corrections as shown in the **COCIN** document(s) in the IFW application image. No new matter should be introduced, nor should the scope or meaning of the claims be changed.

Please complete the response (see below) and forward the completed response to scanning using document code **COCX**.

Elisha Evans

Certificates of Correction Branch

703-308-9390 ext. 110

Thank You For Your Assistance

The request for issuing the above-identified correction(s) is hereby:

Note your decision on the appropriate box.

- ☑ **Approved** — **All** changes apply.
- ☐ **Approved in Part** — Specify below which changes **do not** apply.
- ☐ **Denied** — State the reasons for denial below.

Comments: Fixes typos in specification

Corrects dependencies of seval claims – NO impact on scope.

SPE

3739

Art Unit

Staple Here Only

UNITED STATES PATENT AND TRADEMARK OFFICE
CERTIFICATE OF CORRECTION

PATENT NO. : 6,832,997

DATED : DECEMBER 21, 2004

INVENTOR(S) : ANDY H. UCHIDA, JOHN E. ASHLEY AND HUGH R. SHARKEY

It is certified that an error appears in the above-identified patent and that said Letters Patent is hereby corrected as shown below:

Under OTHER PUBLICATIONS:
Page 3, Gottlob, C., replace "Ablationof" with --Ablation of--.

Page 4, "What New in Office Electrosurgery?...", replace "What" with --What's--; and replace "ellman" with --Ellman--.
Page 4, Martin H. Savitz, replace "fluoroscoic" with --fluoroscopic--.

Column 1:
Lines 9-10, replace "EMPLOYiNG" with --EMPLOYING--.
Line 12, replace "EMPLOYiNG" with --EMPLOYING--.
Line 37, replace "maybe" with --may be--.

Column 9:
Line 19, replace "an" with --a--.

Column 10:
Line 47, replace "extend" with --extended--.

Column 12:
Line 6, replace "percuataneous" with --percutaneous--.
Line 9, after "delivery of the", insert --distal portion of the--.

Column 14:
Line 67, replace "mechanism" with --mechanisms--.

MAILING ADDRESS OF SENDER:

PATENT NO. 6,832,997

No. of add'l copies

Phyllis K. Kristal
Fish & Richardson P.C.
1425 K Street, N.W.
11th Floor
Washington, DC 20005-3500

Staple Here Only

UNITED STATES PATENT AND TRADEMARK OFFICE
CERTIFICATE OF CORRECTION

PATENT NO. : 6,832,997

DATED : DECEMBER 21, 2004

INVENTOR(S) : ANDY H. UCHIDA, JOHN E. ASHLEY AND HUGH R. SHARKEY

It is certified that an error appears in the above-identified patent and that said Letters Patent is hereby corrected as shown below:

Column 17:
Line 1, replace "itself" with --itself.--.
Line 4, replace "provide" with --provides--.

Column 18:
Line 19, replace "Optional" with --Optionally--.

Column 20:
Lines 16-17, replace "tantalum-lpolyurethane" with --tantalum/polyurethane--.

Column 23:
Line 13, replace "8" with --1--.
Line 49, before "assistance", delete "the".

Column 24:
Line 44, replace "23" with --26--.
Line 50, replace "23" with --26--.
Line 54, replace "23" with --26--.

Column 26:
Line 57, replace "electrode" with --electrodes--.

Column 27:
Line 7, after "according to", insert --claim 45.

MAILING ADDRESS OF SENDER:

PATENT NO. 6,832,997

No. of add'l copies

Phyllis K. Kristal
Fish & Richardson P.C.
1425 K Street, N.W.
11th Floor
Washington, DC 20005-3500

UNITED STATES PATENT AND TRADEMARK OFFICE

COMMISSIONER FOR PATENTS
UNITED STATES PATENT AND TRADEMARK OFFICE
WASHINGTON, DC 20231
www.uspto.gov

Paper No.

MAIL

FEB 27 2003

DIRECTOR OFFICE
TECHNOLOGY CENTER 2600

FISH & RICHARDSON, PC
4350 LA JOLLA VILLAGE DRIVE
SUITE 500
SAN DIEGO CA 92122

In re Application Serial No.:

09/876,848

ON REQUEST TO
WITHDRAW AS ATTORNEY

The Request to Withdraw as Attorney is **GRANTED**.

Further communications will be directed to the address listed below until such a time as applicant properly notifies the Patent and Trademark Office of a change of address. This address has been provided by the withdrawing attorney(s).

Krista Zele
Special Program Examiner
Technology Center 2600
Communications
(703) 305-4701

cc: Micron Technology, Inc.
C/o Tom D'Amico
Dickstein, Shapiro, Moran & Oshinsky
2101 L Street NW
Washington DC 20037-1526

UNITED STATES PATENT AND TRADEMARK OFFICE

Commissioner for Patents
United States Patent and Trademark Office
P.O. Box 1450
Alexandria, VA 22313-1450
www.uspto.gov

MCAFEE & TAFT
TENTH FLOOR, TWO LEADERSHIP SQUARE
211 NORTH ROBINSON
OKLAHOMA CITY OK 73102

COPY MAILED

MAR 1 5 2006

OFFICE OF PETITIONS

In re Application of :
Marc A. Messner :
Application No. 09/876,867 : ON PETITION
Filed: June 8, 2001 :
Attorney Docket Number: 01-Messner (A) :

This is a decision on the petition filed October 11, 2005, to withdraw the holding of abandonment, which is treated under 37 CFR 1.181, in accordance with the reasoning of the decision in Delgar Inc. v. Schuyler, 172 USPQ 513.

The petition is **GRANTED**.

This application became abandoned on June 19, 2005, after the applicant failed to timely file a proper reply to the non-Final Office Action mailed March 18, 2005. The instant petition and this decision precede the mailing of the Notice of Abandonment.

Petitioner asserts that the non-Final Office Action was never received.

The file record discloses that the non-Final Office Action was mailed to the address of record which is the address provided in the revocation/power of attorney and change of address filed February 23, 2005, prior to the mailing of the Office Action. Petitioner has provided a copy of the patent file and docketing records fo this specific application, wherein receipt of the non-Final Office Action, mailed March 18, 2005, would have been filed, had it been received. Petitioner also documents the procedures used for handling of USPTO correspondence in an effort to show that the Notice mailed March 18, 2005 was not received.

In that the statement from the petitioner and the exhibit from the docket record for the instant matter show no entry indicating receipt of the non-Final Office Action mailed March 18, 2005, it is apparent that the Office Action was not received. The evidence submitted corroborates non-receipt of the Office Action.

In view of the facts set forth in the petition, it is concluded that the non-Final Office Action was never received at the address of record. Accordingly, the holding of

abandonment is withdrawn and the Notice of Abandonment is vacated. No petition fee Is due and the $400 fee charged to deposit account no. 50-0449 will be credited back.

The file is being forwarded to Technology Center 3625 for the remailing of the non-Final Office Action originally mailed on March 18, 2005. Telephone inquiries concerning the remailing of the Office Action should be referred to the Technology Center. All other inquiries regarding this decision may be directed to the undersigned Petitions Attorney at (571) 272-3212.

Patricia Faison-Ball

Patricia Faison-Ball
Senior Petitions Attorney
Office of Petitions

UNITED STATES PATENT AND TRADEMARK OFFICE

COMMISSIONER FOR PATEN
UNITED STATES PATENT AND TRADEMARK OFFI
WASHINGTON, D.C. 2023
www.uspto.g

Paper No. 10

Anthony J. Orler
HOGAN & HARTSON L.L.P.
500 South Grand Avenue, Suite 1900
Los Angeles, CA 90071

MAIL

OCT 2 4 2002

DIRECTOR OFFICE
TECHNOLOGY CENTER 2100

In re Application of: Doug Teeple)
Application No. 09/876,878)
Filed: June 6, 2001) **DECISION ON REQUEST FOR**
For: ENHANCED MULTIMEDIA) **WITHDRAWAL AS ATTORNEY**
MOBILE CONTENT DELIVERY)
AND MESSAGE SYSTEM USING
LOAD BALANCING

This is a decision on the Request To Withdraw from Representation filed October 7, and supplemented by the filing of October 18, 2002.

A grantable request to withdraw as attorney of record should indicate thereon the present mailing addresses of the attorney(s) who is/are withdrawing from the record and of the applicant. The request for withdrawal must be signed by every attorney seeking to withdraw or contain a clear indication that one attorney is signing on behalf of another/others. A request to withdraw will not be approved unless at least 30 (thirty) days would remain between the date of approval and the later of the expiration date of a time to file a response or the expiration date of the maximum time period which can be extended under 37 C.F.R. § 1. 136(a). The effective date of withdrawal being the date of decision and not the date of request. See M.P.E.P. § 402.06. 37 C.F.R. § 1.36 further requires that the applicant or patent owner be notified of the withdrawal of the attorney or agent.

The request filed October 18, 2002 meets all the requirements. Accordingly the request is **GRANTED**.

All future communications from the Office will be directed to the below-listed address until otherwise notified by applicant. This correspondence address is provided by the withdrawn attorney(s). Applicant is reminded of the obligation to promptly notify the Patent and Trademark Office (Office) of any change in correspondence address to ensure receipt of all communications from the Office.

Vincent N. Trans
Special Programs Examiner
Technology Center 2100
Computer Architecture and Software
(703) 305-9750

cc: BITFONE
32451 Golden Lantern
Suite 301
Languna Niguel, CA 92677

UNITED STATES PATENT AND TRADEMARK OFFICE

COMMISSIONER FOR PATENTS
UNITED STATES PATENT AND TRADEMARK OFFICE
P.O. BOX 1450
ALEXANDRIA, VA 22313-1450
www.uspto.gov

Thaddius J. Carvis
102 North King Street
Leesburg, VA 20176

COPY MAILED

JUL 2 2 2005

OFFICE OF PETITIONS

In re Application of	:	
Emanuel E. Katz	:	
Application No. 09/876,881	:	DECISION ON PETITION
Filed: June 7, 2001	:	UNDER 37 CFR 1.78(a)(6)
Attorney Docket No. NBI-862A		

This is a decision on the petition under 37 CFR 1.78(a)(6), filed February 10, 2004, to accept an unintentionally delayed claim under 35 U.S.C. §119(e) for the benefit of the prior-filed provisional application set forth in the concurrently filed amendment.

The petition is **GRANTED**.

A petition under 37 CFR 1.78(a)(6) is only applicable to those applications filed on or after November 29, 2000. Further, the petition is appropriate only after expiration of the period specified in 37 CFR 1.78(a)(5)(ii) and must be filed during the pendency of the nonprovisional application. In addition, the petition must be accompanied by:

> **(1)** the reference required by 35 U.S.C. § 119(e) and 37 CFR 1.78(a)(5)(i) to the prior-filed application, unless previously submitted;
> **(2)** the surcharge set forth in § 1.17(t); and
> **(3)** a statement that the entire delay between the date the claim was due under 37 CFR 1.78(a)(5)(ii) and the date the claim was filed was unintentional. The Commissioner may require additional information where there is a question whether the delay was unintentional.

The instant pending nonprovisional application was filed on June 7, 2001, within twelve months of the filing date of the prior-filed provisional application, Application No. 60/210,624, which was filed on June 9, 2000, for which priority is claimed. A reference to the prior-filed provisional application has been included in an amendment to the first sentence of the specification following the title.

The instant nonprovisional application was filed after November 29, 2000, and the claim for priority herein is submitted after expiration of the period specified in 37 CFR 1.78(a)(5)(ii). Also, the reference to the prior-filed provisional application was submitted during the pendency of the nonprovisional

application for which the benefit is sought. *See* 35 U.S.C. §119(e). Accordingly, having found that the instant petition satisfies the conditions of 37 CFR 1.78(a)(6) for acceptance of an unintentionally delayed claim for priority under 35 U.S.C. §119(e), the petition to accept an unintentionally delayed claim of benefit to prior-filed provisional Application No. 60/210,624 is granted.

The granting of the petition to accept the delayed benefit claim to the prior-filed application under 37 CFR 1.78(a)(6) should not be construed as meaning that the instant application is entitled to the benefit of the filing date of the prior-filed application. In order for the instant application to be entitled to the benefit of the prior-filed application, all other requirements under 35 U.S.C. §119(e) and 37 CFR 1.78(a)(4) and (a)(5) must be met. Similarly, the fact that the corrected Filing Receipt accompanying this decision on petition includes the prior-filed application should not be construed as meaning that applicant is entitled to the claim for benefit of priority to the prior-filed application noted thereon. Accordingly, the examiner will, in due course, consider this benefit claim and determine whether the instant application is entitled to the benefit of the earlier filing date.

A corrected Filing Receipt, which includes the priority claim to the prior-filed provisional application, accompanies this decision on petition.

37 CFR 1.78(a)(5)(ii) requires a statement that the entire delay between the date the claim was due under 37 CFR 1.78(a)(5)(ii) and the date the claim was filed was unintentional. Since the statement contained in the instant petition varies from the language required by 37 CFR 1.78(a)(5)(ii), the statement is being construed as the statement required by 37 CFR 1.78(a)(5)(ii) and petitioner must notify the Office if this is **not** a correct interpretation of the statement contained in the instant petition.

Any inquiries concerning this decision may be directed to Marianne Jenkins at (571) 272-3223.

The application is being referred to Technology Center AU 1700 for appropriate action on the amendment submitted February 10, 2004, including consideration by the examiner of the claim under 35 U.S.C. §119(e) for the benefit of priority to prior-filed provisional Application No. 60/210,624.

Frances Hicks

Frances M. Hicks
Lead Petitions Examiner
Office of Petitions
Office of the Deputy Commissioner
for Patent Examination Policy

Attachment: Corrected Filing Receipt

UNITED STATES PATENT AND TRADEMARK OFFICE

COMMISSIONER FOR PATENTS
UNITED STATES PATENT AND TRADEMARK OFFICE
WASHINGTON, D.C. 20231
www.uspto.gov

Paper No. 8

CHOATE, HALL & STEWART
EXCHANGE PLACE
53 STATE STREET
BOSTON MA 02109

COPY MAILED

JUL 19 2002

OFFICE OF PETITIONS

In re Application of
Boulikas
Application No. 09/876,904
Filed: June 8, 2001
Attorney's Docket No. TB 2002.00

ON PETITION

Receipt is acknowledged of the petition filed on October 19, 2001, captioned under 37 CFR 1.53(e)e concerning the U.S. Patent and Trademark Office's handling of an application assigned application Serial No. 09/876,904.

The petition is dismissed.

The application was filed on June 8, 2001. However, on August 17, 2001, Initial Patent Examination Division mailed a Notice of Omitted Items in a Nonprovisional Application, advising applicant that Figure 3 described in the specification appeared to have been omitted.[1] The notice set a two month deadline for replying.

Petitioner timely filed this petition in response.[2] Petitioners explain that Figure 3 was not missing on June 8, 2001. Instead, the specification simply referred to "Figure 3" at times, rather than figures 3A, 3B, 3C, 3D, and 3E. Petitioners included with this petition a copy of the complete set of drawings totaling 8 sheets and a copy of the postcard return receipt indicating USPTO receipt of 8 sheets of drawings. Furthermore, the file wrapper contains 8 sheets of drawings.

It is obvious from the petition that no drawings were actually missing on June 8, 2001. Rather, figures 3A, 3B, 3C, 3D, and 3E were incorrectly described in the specification as "figure 3". However, the "Notice" mailed on August 17, 2001 was correct in stating that "figure 3" described in the specification appeared to have been omitted. Therefore, the "Notice" was properly mailed and will not be withdrawn.

The present petition was not necessitated by any error on the part of the Office and the $130.00 petition was required upon filing of the petition. Thus, the $130.00 petition fee will not be refunded.

---

[1] The notice also noted a failure to comply with requirements for patent applications containing nucleotide sequence and/or amino acid sequence disclosures.

[2] Although it was received after the two month deadline, this petition contains a valid certificate of mailing attesting to the timely deposit of this petition with Express Mail service.

The application will be processed and examined using the application papers filed on June 8, 2001.

Receipt is acknowledged of the response to the notice to comply with sequence requirements.

The application is being returned to the Office of Initial Patent Examination for further processing with a filing date of June 8, 2001, using the application papers filed on that date.

Telephone inquiries concerning this matter may be directed to the undersigned at (703)306-5593.

Scott M. Ledford
Senior Attorney
Office of Petitions
Office of the Deputy Commissioner
for Patent Examination Policy

UNITED STATES PATENT AND TRADEMARK OFFICE

Commissioner for Patents
United States Patent and Trademark Office
P.O. Box 1450
Alexandria, VA 22313-1450
www.uspto.gov

BINGHAM MCCUTCHEN LLP
THREE EMBARCADERO
SUITE 1800
SAN FRANCISCO CA 94111-4067

COPY MAILED

SEP 1 6 2004

OFFICE OF PETITIONS

In re Application of	:	
Teni Boulikas	:	
Application No. 09/876,904	:	ON PETITION
Filed: June 8, 2001	:	
Attorney Docket No. TB2002.00	:	

This is a decision on the petition under 37 CFR 1.137(b), filed August 2, 2004, to revive the above-identified application.

The petition under 37 CFR 1.137(b) is **GRANTED**.

The above-identified application became abandoned for failure to timely file a response to the non-final Office action mailed November 20, 2003. This Office action set a shortened statutory period for reply of one month. No extensions of time under 37 CFR 1.136(a) were obtained. Accordingly, the above-identified application became abandoned on December 21, 2003. The mailing of this decision precedes the mailing of a Notice of Abandonment.

With the instant petition, petitioner paid the petition fee, filed a reply in the form of a response to restriction requirment, and made the proper statement of unintentional delay.

The petition fee of $665 has been charged to Deposit Account No. 50-2518, as authorized.

The application file is being forwarded to Group Art Unit 1632 for consideration of the response to restriction requirement, filed August 2, 2004.

Telephone inquiries concerning this decision should be directed to the undersigned at (703) 305-0272.

Cliff Congo

Cliff Congo
Petitions Attorney
Office of Petitions

UNITED STATES PATENT AND TRADEMARK OFFICE

Commissioner for Patents
United States Patent and Trademark Office
P.O. Box 1450
Alexandria, VA 22313-1450
www.uspto.gov

FOLEY & LARDNER LLP
1530 PAGE MILL ROAD
PALO ALTO CA 94304

COPY MAILED

MAY 15 2007

OFFICE OF PETITIONS

In re Application of
Teni Boulikas
Application No. 09/876,904
Filed: June 8, 2001
Attorney Docket No. 062282-0200

ON PETITION

This is a decision on the "Petition To Withdraw The Erroneously Issued Notice of Abandonment", filed March 29, 2007, which is treated under 37 CFR 1.181.

The petition under 37 CFR 1.181 is **GRANTED**.

A Final Office Action was mailed August 9, 2006 which set a three month period for response. No response having been filed, the instant application became abandoned November 10, 2006 and a Notice of Abandonment was mailed on February 21, 2007.

Petitioners argue that an RCE, in response to the Final Office Action, with a three month extension of time request was filed on February 8, 2007.

A search of the application file and the USPTO records reveals that in fact, the RCE, amendment and three month extension of time, all with the proper fees, were timely filed on February 8, 2007 (certificate of mail date). The receipt date for the RCE, amendment and three month extension of time is February 8, 2007 and a copy of the post-card receipt, date stamped by the USPTO on February 8, 2007 is of record with the instant petition.

Accordingly, the response was timely and the Notice of Abandonment mailed February 21, 2007 was mailed in error and is hereby withdrawn. No petition fee is due and none has been charged.

This matter is being referred to Technology Center 1633 for processing the RCE filed February 8, 2007.

Telephone inquiries concerning this matter may be directed to the undersigned Petitions Attorney at (571) 272-3212.

Patricia Faison-Ball

Patricia Faison-Ball
Senior Petitions Attorney
Office of Petitions

UNITED STATES PATENT AND TRADEMARK OFFICE

Commissioner for Patents
United States Patent and Trademark Office
P.O. Box 1450
Alexandria, VA 22313-1450
www.uspto.gov

KILPATRICK STOCKTON LLP
J. STEVEN GARDNER
1001 WEST FOURTH STREET
WINSTON-SALEM NC 27101

COPY MAILED

FEB 06 2009

OFFICE OF PETITIONS

In re Application of
Wilhelm
Application No. 09/876,915
Filed: June 8, 2001
Attorney Docket No. 2000-008/9/14
For: SYSTEMS AND METHODS FOR ADAPTIVE SAMPLING AND ESTIMATING A SYSTEMATIC RELATIONSHIP BETWEEN A PLURALITY OF POINTS

ON PETITION

This is a decision on the petition under 37 CFR 1.181, filed January 14, 2009, requesting that the Office withdraw the holding of abandonment of the above-identified application. In the alternative, petitioner requests revival under 37 CFR 1.137(b).

The petition under 37 CFR 1.181 is **GRANTED**.

The petition under 37 CFR 1.137(b) is **DISMISSED AS MOOT**.

This application was held abandoned for failure to respond in a proper manner to the non-final Office action, mailed July 2, 2004, which set forth an extendable three (3) month period for reply. Applicant filed an amendment and a petition for a one month extension of time on November 1, 2004. A Notice of Abandonment was mailed on February 13, 2008.The Notice of Abandonment stated that the application was abandoned because the November 1, 2004 was not a proper reply or a bona fide attempt at a proper reply because claim 2 had an improper status identifier.

Petitioner requests withdrawal of the holding of abandonment based on the assertion that the amendment as a whole was a bona fide attempt to advance the application because it substantially responds to all rejections and objections in the non-final Office action. The undersigned finds this argument convincing, as the error cited in the Notice of Abandonment is a minor error. It is apparent from a review of the amendment and remarks section that applicant intended to cancel claim 2. The Office probably should have addressed the merits of the

amendment, or at the very least, mailed out a letter affording applicant one month/thirty days to correct the minor error.

The feeless petition under 37 CFR 1.181 is **granted**, the holding of abandonment is withdrawn, and the February 13, 2008 Notice of Abandonment is **vacated**. The petition under 37 CFR 1.137(b) is **dismissed as moot**. Applicant's credit card will be credited the $810.00 petition fee submitted on January 14, 2009.

Applicant has filed an amendment addressing the improper status identifier for claim 2 and making "minor formatting changes" to the amendment filed on November 1, 2004. Therefore, there is no need to mail a one month/30 day bona fide reply letter. Accordingly, the application file will be forwarded to Technology Center A.U. 2624 for consideration of the amendment filed on January 14, 2009.

Telephone inquiries pertaining to this matter may be directed to the undersigned at (571) 272-3230.

Shirene Willis Brantley

Shirene Willis Brantley
Senior Petitions Attorney
Office of Petitions
Office of the Deputy Commissioner
for Patent Examination Policy

UNITED STATES PATENT AND TRADEMARK OFFICE

Commissioner for Patents
United States Patent and Trademark Office
P.O. Box 1450
Alexandria, VA 22313-1450
www.uspto.gov

Townsend & Townsend
Two Embarcadero Center
Eighth Floor
San Francisco, CA 94111-3834

COPY MAILED

FEB 14 2006

OFFICE OF PETITIONS

In re Pirim Application No. 09/876,929 Filing Date: June 8 2001 Attorney Docket: 14539-20046H-00011US	: : : : :	RECONSIDERATION OF PATENT TERM ADJUSTMENT

This decision is in response to applicant's "LETTER REGARDING PATENT TERM ADJUSTMENT filed June 10, 2005 requesting that the Office review the PTA determination in light of a late reply to the notice to file missing parts.

Applicants request for PTA reconsideration is GRANTED. The Office will adjust the PAIR calculation at the time of the mailing of the notice of allowance to reflect a determination of four hundred and ninety-three (493) days.

Applicants draws the Office attention to the response to the notice to file missing parts. Applicants assert that the response date has not been entered into PALM and therefore the Office failed to reduce the PTA for the period of reply over three months as is required by 37 CFR 1.704(b).

Applicants' arguments are persuasive. The record does reflects that the notice to file missing parts that was mailed by the Office on June 28, 2001 was responded to by applicants on December 31, 2001, a ninety-four day delay. Accordingly, the determination of five hundred and eighty-seven days is reduced by ninety-four days. The correct amount of PTA at the time of the mailing of the notice of allowance is four hundred and ninety (493)days.

After the mailing of this decision, the application will be

forwarded to the Office of Patent Publications for a prompt issuance of the patent application. Any delays in issuing the application within four months of the payment of the issue fee will be reflected in the issue notification letter that is mailed to applicants approximately three weeks prior to issuance.

The Office has not assessed the $200.00 fee for the submission of this letter regarding PTA. The Office thanks for good faith and candor bringing this matter to the attention of the Office.

Any questions concerning this application should be directed to Kery Fries at 571-272-7757.

Kery Fries
Senior Legal Advisor
Office of Patent Legal Administration
Office of Deputy Commissioner
for Patent Examination Policy

CC; Adjusted PAIR calculation

UNITED STATES PATENT AND TRADEMARK OFFICE

COMMISSIONER FOR PATENTS
UNITED STATES PATENT AND TRADEMARK OFFICE
P.O. BOX 1450
ALEXANDRIA, VA 22313-1450
www.uspto.gov

MORGAN, LEWIS & BOCKIUS, LLP.
2 PALO ALTO SQUARE
3000 EL CAMINO REAL
PALO ALTO, CA 94306

COPY MAILED

JUN 23 2005

OFFICE OF PETITIONS

In re Patent No. 6,777,036	:	
Issued: August 17, 2004	:	
Application No. 09/876,944	:	PATENT TERM ADJUSTMENT
Filed: June 8, 2001	:	
Atty. Dkt. No.: 8317-120-999	:	

This is a decision on the "REQUEST FOR RECONSIDERATION OF PATENT TERM ADJUSTMENT UNDER 37 C.F.R. § 1.705(d)," filed October 18, 2004, requesting that the above-identified patent be accorded a patent term adjustment of 121 days.

The application for patent term adjustment ("PTA") under 37 CFR 1.705(d) is **GRANTED**.

The above-identified application matured into U.S. Patent No. 6,777,036 on August 17, 2004. The instant request for reconsideration was timely filed October 18, 2004 in accordance with 37 CFR 1.705(d), August 17th 2004 having fallen on a Sunday.

The patent issued with a PTA of 56 days. Applicants argues that the adjustment of 121 days should not have been reduced 65 days in connection with the "miscellaneous communication" filed June 14, 2004.

A review of the application history reveals that an adjustment of 104 days can be attributed to the Office in accordance with 37 CFR 1.702(a)(1). An additional adjustment of 17 days can be attributed to the Office in accordance with 37 CFR 1.702(a)(2).

On June 14, 2004, applicants submitted a statement of limited recognition under 37 CFR 10.9(b) resulting in the adjustment of 121 days being reduced 65 days under 37 CFR 1.704(c)(10). Submission of such statement under 37 CFR 10.9(b) is considered within the same context as submission of a power of attorney. *See*, MPEP 2732 and 1247 Off. Gaz. Pat. Office 111 (June 26, 2001). Accordingly, the Office errantly reduced the adjustment of 121 days as submission of documents related to power of attorney are not considered a failure to engage in reasonable

efforts to conclude prosecution within the meaning of 37 CFR 1.704(c)(10).

Therefore, at the time of issuance, the patent was entitled to a PTA 121 days, as argued by applicants.

The PTA indicated on the patent is to be corrected by issuance of a certificate of correction showing a revised Patent Term Adjustment of 121 days.

This application file will be forwarded to the Certificate of Corrections branch for issuance of a certificate of correction to indicate that the term of this patent is extended or adjusted under 35 U.S.C. 154(b) by 121 days.

The required application fee of $200.00 has been charged to Deposit Account No. 50-0310.

Telephone inquiries specific to this matter should be directed to Petitions Attorney Alesia M. Brown at (703) 305-0310.

Karin Ferriter
Senior Legal Advisor
Office of Patent Legal Administration
Office of Deputy Commissioner
for Patent Examination Policy

UNITED STATES PATENT AND TRADEMARK OFFICE

Commissioner for Patents
United States Patent and Trademark Office
P.O. Box 1450
Alexandria, VA 22313-1450
www.uspto.gov

JONES DAY
222 EAST 41ST STREET
NEW YORK, NY 10017

COPY MAILED

MAY 11 2004

OFFICE OF PETITIONS

In re Application of	:	
Chen et al.	:	
Application No. 09/876,984	:	ON PETITION
Filed: June 8, 2001	:	
Attorney Docket No. 618-999-999	:	

This is a decision on the petition under 37 C.F.R. § 1.137(b), filed March 22, 2004, to revive the above-identified application.

The petition is **GRANTED.**

The above-identified application became abandoned for failure to submit the issue fee and publication fee in a timely manner in reply to the Notice of Allowance mailed August 29, 2003, which set a statutory period for reply of three (3) months. Accordingly, the above-identified application became abandoned on December 2, 2003. A Notice of Abandonment was mailed on February 10, 2004.

Petitioner has met the requirements to revive the above-identified application pursuant to 37 CFR 1.137(b).

This matter is now being forwarded to the Publishing Division for processing into a patent.

Telephone inquiries should be directed to the undersigned at (703) 306-0482.

Liana Chase

Liana Chase
Petitions Examiner
Office of Petitions
Office of the Deputy Commissioner
for Patent Examination Policy

UNITED STATES PATENT AND TRADEMARK OFFICE

Commissioner for Patents
United States Patent and Trademark Office
P.O. Box 1450
Alexandria, VA 22313-1450
www.uspto.gov

COPY MAILED
DEC 19 2006
OFFICE OF PETITIONS

SALIWANCHIK LLOYD & SALIWANCHIK
A PROFESSIONAL ASSOCIATION
PO BOX 142950
GAINESVILLE FL 32614-2950

In re	:
Edwards, et al.	: DECISION REGARDING
Application No. 09/876,997	: PATENT TERM ADJUSTMENT
Filed: June 8, 2001	:
Patent No. 7,060,479	:
Issued: June 13, 2006	:

This decision is in response to the letter titled "COMMUNICATION", filed June 18, 2006, requesting correction of the patent term adjustment (PTA) indicated on the patent.

The request is **DISMISSED**.

The Office determined a patent term adjustment of six hundred forty (640) days based on an adjustment for PTO delay of two hundred fifty-seven (257) days pursuant to 35 U.S.C. 154(b)(1)(A)(i) and 37 C.F.R. § 1.703(a)(1), one hundred eighty (180) days pursuant to 35 U.S.C. 154(b)(1)(A)(ii) and 37 C.F.R. § 1.703(a)(2), one hundred ninety-three (193) days pursuant to 35 U.S.C. 154(b)(1)(A)(iv) and 37 C.F.R. § 1.703(a)(6), and one hundred five (105) days pursuant to 35 U.S.C. 154(b)(1)(B) and 37 C.F.R. § 1.703(b), reduced by thirty-one (31) and sixty-four (64) days of applicant delay pursuant to 35 U.S.C. 154(b)(2)(C)(ii) and 37 C.F.R. § 1.704(b).

As pointed out by Patentees, applicant delay of thirty-eight (38) days should have been assessed, not thirty-one (31) days. The Office mailed an Office action on August 21, 2003. Applicants did not file a response until December 29, 2003, not December 22, 2003 as indicated in PAIR. While the response did contain a Certificate of Mailing dated December 22, 2003, Certificates of Mailing are not taken into account in the determination of patent term adjustment. Accordingly, for PTA purposes, the response was not timely, and thirty-eight (38) days should have been assessed for this filing, not thirty-one (31) days.

However, the Office did not mail an Office action in response until October 19, 2004. The Office was assessed one hundred eighty (180) days for this response, based on applicant's filing of December 22, 2003. As Patentees demonstrated that their response was actually filed on December 29, 2003, then the Office should not have been assessed one hundred eighty (180) days for the October 19, 2004 Office action, but rather one hundred seventy three (173) days. The net result is no change in the determination of the patent term adjustment.

Telephone inquiries specific to this letter should be directed to Cliff Congo, Petitions Attorney, at (571)272-3207.

Kery Fries
Senior Legal Advisor
Office of Patent Legal Administration
Office of Deputy Commissioner
for Patent Examination Policy

UNITED STATES PATENT AND TRADEMARK OFFICE

UNDER SECRETARY OF COMMERCE FOR INTELLECTUAL PROPERTY AND
DIRECTOR OF THE UNITED STATES PATENT AND TRADEMARK OFFICE
WASHINGTON, DC 20231
www.uspto.gov

29 JAN 2002

Paper No. 5

In re Application of	:	
William V. Goodhue et al.	:	
Serial No. 09/877,036	:	DECISION ON PETITION
Filed: June 11, 2001	:	TO MAKE SPECIAL
For: SCREW GUN	:	

Applicants' petition, filed June 11, 2001, requests that this application be rendered special for examination in that applicant is over sixty-five (65) years of age.

The petition has been reviewed and is found to be in compliance with the requirements for special status as set forth in Section 708.02(IV) of the Manual of Patent Examining Procedure (MPEP).

PETITION GRANTED.

E. Rollins-Cross, Director
Technology Center 3700

Breiner & Breiner LLC
P.O. Box 19290
Alexandria, VA 22320-0290

UNITED STATES PATENT AND TRADEMARK OFFICE

Commissioner for Patents
United States Patent and Trademark Office
P.O. Box 1450
Alexandria, VA 22313-1450
www.uspto.gov

Bombardier Recreational Products, Inc.
Intellectual Property Department
P.O. Box 230
Norton, VT 05907-0230

COPY MAILED

JUN 2 0 2005

OFFICE OF PETITIONS

ON PETITION

In re Application of :
Yvon Bedard, et. al. :
Application No. 09/877,190 :
Filed: June 11, 2001 :
Attorney Docket No. 2003-00269-US2 :

This is a decision on the petition under 37 CFR 1.137(b), filed April 15, 2005, to revive the above-identified application.

The above-identified application became abandoned for failure to submit the issue fee and publication fee in a timely manner in reply to the Notice of Allowance mailed November 8, 2004, which set a statutory period for reply of three (3) months. Accordingly, the above-identified application became abandoned February 8, 2005.

In response, petitioner submitted with the instant petition $1,500 for the petition to revive fee, $1,400 for the issue fee, $300 for the publication fee, an Amendment after allowance under 37 CFR 1.312 and the statement required by 37 CFR 1.137(b).

Since the requirements under 37 CFR 1.137(b) have been met, the petition is **GRANTED**.

The file does not indicate a change of address has been submitted, although the address given on the petition differs from the address of record. If appropriate, a change of address should be filed in accordance with MPEP 601.03. A courtesy copy of this decision is being mailed to the address given on the petition; however, the Office will mail all future correspondence solely to the address of record.

The application file is being referred to Technology Center Art Unit 3618, for consideration of the Amendment under 37 CFR 1.312, filed April 15, 2005, as having been received prior to payment of the issue fee.

Telephone inquiries concerning this decision should be directed to the undersigned at (571) 272-3226.

Andrea Smith
Petitions Examiner
Office of Petitions
Office of the Deputy Commissioner
for Patent Examination Policy

cc: Jonathan D. Cutler
400 - 14 Place du Commerce
Verdun, Quebec H3E 1T5
CANADA

- UNITED STATES PATENT AND TRADEMARK OFFICE

Commissioner for Patents
United States Patent and Trademark Office
P.O. Box 1450
Alexandria, VA 22313-145

JUL - 5 2005

STERLING W. CHANDLER
1300 North Seventeenth Street
Suite 1800
Arlington, VA 22209

In re application of
Peter J. Kight
Application No. 09/877,192
Filed: June 11, 2001
For: BILL PAYMENT SYSTEM AND METHOD WITH MERCHANT INFORMATION

DECISION ON REQUEST FOR WITHDRAWAL OF ATTORNEY

This is a decision on the request filed on June 16, 2005, under 37 CFR 1.36 and MPEP 402.06, requesting permission to withdraw as the attorney of record in the above-identified application.

The request is **NOT APPROVED as Moot**.

Under 37 CFR 1.36 an attorney may withdraw only upon application to and approval by the Commissioner. It should be noted that a withdrawal is effective when approved, not when filed. Besides giving due notice to his or her client and delivering to the client all papers and property to which the client is entitled as specified under 37 CFR 10.40, approval of such a request requires that the following conditions be met:

A) Each attorney of record must sign the notice of withdrawal, or the notice must contain a clear indication of one attorney signing on behalf of another, because the Office does not recognize law firms;

B) A proper reason for the withdrawal as enumerated in 37 CFR 10.40(b) or subsection (1)-(6) of 37 CFR 10.40(c) must be provided; and

C) If withdrawal is requested in accordance with 37 CFR 10.40(c) above, there must be at least 30 days between approval of the withdrawal and the later of the expiration date of a time period for reply or the expiration date of the period which can be obtained by a petition and fee for extension of time under 37 CFR 1.136(a).

The request to withdraw as attorney in the above-identified application is not approved as moot because the attorney making the request; Alfred A. Stadnicki does not now have, and apparently never has had, power of attorney in this application. There is no record of power of attorney ever being given to the attorney making the request.

Further, the request to withdraw as attorney in the above-identified application is not approved because the request does not comply with Item B). While a reason may be provided by referencing a specific portion of 37 CFR 10.40, the reason must deal with actions by the client. In this case, there is nothing in the file record that indicates the existence of an assignee or that the assignee is the client. Absent a 3.73(b) statement, the "client" referred to in 37 CFR 10.40 is seen as being those individuals who conferred power upon the attorneys, in this case the inventors.

Steven N. Meyers
Special Programs Examiner
Patent Technology Center 3600
(571) 272-6611

SNM/pav: 06/27/05

UNITED STATES PATENT AND TRADEMARK OFFICE

COMMISSIONER FOR PATENTS
UNITED STATES PATENT AND TRADEMARK OFFICE
P.O. BOX 1450
ALEXANDRIA, VA 22313-1450
www.uspto.gov

MAIL

AUG 0 8 2005

DIRECTOR OFFICE
TECHNOLOGY CENTER 2600

FLESHNER & KIM, LLP
P.O. BOX 221200
CHANTILLY VA 20153

In re Application of:
Young Jo Lee, et al.
Application No. 09/877,199
Filed: June 11, 2001
For: **COMMUNICATION SYSTEM AND METHOD FOR TRANSMITTING SIGNAL IN THE SAME**

DECISION
ON PETITION

This is a response to the petition, filed July 13, 2005, which is treated as a Petition to Withdraw Holding of Abandonment pursuant to 37 C.F.R. §1.181. No fee is required.

This application became abandoned for failure to timely file a response to the non-final Office action mailed November 3, 2004, which set a shortened statutory period of three (3) months to reply. A Notice of Abandonment was mailed June 14, 2005.

Petitioner alleges to have timely filed a response to the Office action. To support this position, Petitioner has included with the instant petition a copy of an amendment/response, copy of a transmittal letter itemizing a 43 page response and a petition for three (3) month extension of time, each bearing a certificate of transmission having a date of May 3, 2005. In addition, Petitioner has also included as evidence, a copy of a facsimile transmission report which reflects that a 43 page submission was faxed to a USPTO facsimile number on May 3, 2005.

37 C.F.R. § 1.8 Certificate of mailing or transmission states in part:
(a) Except in the cases enumerated in paragraph (a)(2) of this section, correspondence required to be filed in the Patent and Trademark Office within a set period of time will be considered as being timely filed if the procedure described in this section is followed. The actual date of receipt will be used for all other purposes.
(1) Correspondence will be considered as being timely filed if:
(i) The correspondence is mailed or transmitted prior to expiration of the set period of time by being:
(A) Addressed as set out in § 1.1(a) and deposited with the U.S. Postal Service with sufficient postage as first class mail; or
(B) Transmitted by facsimile to the Patent and Trademark Office in accordance with § 1.6(d); and
(ii) The correspondence includes a certificate for each piece of correspondence stating the date of deposit or transmission. The person signing the certificate should have reasonable basis to expect that the correspondence would be mailed or transmitted on or before the date indicated. [emphasis added]

Petitioner has satisfied the requirements of 37 C.F.R. §1.8(a) as set forth above.

Accordingly, the petition is **GRANTED** and holding of abandonment is hereby withdrawn.

The application will be forwarded to the Technology Center's technical support staff for entry of the response submitted with the petition, processing the request for three (3) month extension of time and removing the charge for this petition. The subject petition was treated as though it were a petition under 37 C.F.R. §1.181. There is no fee required for this petition. From there, the file will be forwarded to the examiner for consideration in due course.

The telephone number referred to in the petition is the personal fax number of examiner Cicely Ware (AU2634). Therefore, it was concluded that the papers were timely filed via facsimile transmission to a facsimile number of the U.S. Patent and Trademark Office in compliance with the requirements of 37 CFR 1.8(a)(1). However, Petitioner is reminded that the Official Facsimile Number for **all** incoming correspondence to the Office is (571) 273-8300. Petitioner may want to note this number in order to avoid any future correspondence problems.

Dwayne Bost
Special Program Examiner
Technology Center 2600
Communications

UNITED STATES PATENT AND TRADEMARK OFFICE

COMMISSIONER FOR PATENTS
UNITED STATES PATENT AND TRADEMARK OFFICE
P.O. BOX 1450
ALEXANDRIA, VA 22313-1450
www.uspto.gov

TIM COOK
P.O. BOX 10107
LIBERTY TX 77575

COPY MAILED

MAY 09 2005

OFFICE OF PETITIONS

In re Application of
Heagy, et al.
Application No. 09/877,219
Filed: June 8, 2001
For: METHOD AND APPARATUS
FOR LINING A CONDUIT

DECISION ON PETITION

This is a decision on the petition under 37 CFR 1.137(a), filed December 8, 2004 (Certificate of Mailing date of December 2, 2004), to revive the above-identified application.

The petition is **DISMISSED**.

Any request for reconsideration of this decision must be submitted within **TWO (2) MONTHS** from mail date of this decision. Extensions of time under 37 CFR 1.136(a) are permitted. The reconsideration request should include a cover letter entitled "Renewed Petition under 37 CFR 1.137(a)." This is not a final agency decision.

The application became abandoned April 25, 2004 for failure to timely submit the issue fee as required by the Restriction Requirement mailed March 24, 2004. The Notice set a one month shortened statutory period of time for reply. Notice of Abandonment was mailed November 16, 2004.

A grantable petition under 37 CFR 1.137(a) must be accompanied by: (1) the required reply, unless previously filed; (2) the petition fee as set forth in 37 CFR 1.17(l); (3) a showing to the satisfaction of the Commissioner that the entire delay in filing the required reply from the due date for the reply until the filing of a grantable petition pursuant to 37 CFR 1.137(a) was unavoidable; and (4) any terminal disclaimer (and fee as set forth in 37 CFR 1.20(d)) required pursuant to 37 CFR 1.137(c).

The instant petition fails to satisfy requirement (1) set forth above. No reply to the outstanding Restriction Requirement appears to have been submitted. Any renewed petition must be accompanied by the required reply. Enclosed herewith is a courtesy copy of the Office communication dated March 24, 2004.

Further correspondence with respect to this matter should be addressed as follows:

By mail: Mail Stop Petition
Commissioner for Patents
P.O. Box 1450
Alexandria, VA 22313-1450

By facsimile: (703) 872-9306

By hand: U.S. Patent and Trademark Office
Customer Window
Mail Stop Petition
Randolph Building
Dulany Street
Alexandria, VA 22314

Telephone inquiries concerning this matter may be directed to the undersigned at 703-305-0310.

Alesia M. Brown
Petitions Attorney
Office of Petitions

Enclosure: Copy of Office communication

UNITED STATES PATENT AND TRADEMARK OFFICE

COMMISSIONER FOR PATENTS
UNITED STATES PATENT AND TRADEMARK OFFICE
P.O. BOX 1450
ALEXANDRIA, VA 22313-1450
www.uspto.gov

TIM COOK
P.O. BOX 10107
LIBERTY TX 77575

COPY MAILED

JUL 15 2005

OFFICE OF PETITIONS

In re Application of :
Heagy, et al. :
Application No. 09/877,219 : DECISION ON PETITION
Filed: June 8, 2001 :
For: METHOD AND APPARATUS :
FOR LINING A CONDUIT :

This is a decision on the renewed petition under 37 CFR 1.137(a), filed May 16, 2005, to revive the above-identified application.

The petition is **GRANTED**.

The application became abandoned April 25, 2004 for failure to timely submit the issue fee as required by the Restriction Requirement mailed March 24, 2004. The Notice set a one month shortened statutory period of time for reply. Notice of Abandonment was mailed November 16, 2004. a petition under 37 CFR 1.137(a) was filed December 8, 2004 and dismissed May 9, 2005.

A grantable petition under 37 CFR 1.137(a) must be accompanied by: (1) the required reply, unless previously filed; (2) the petition fee as set forth in 37 CFR 1.17(l); (3) a showing to the satisfaction of the Commissioner that the entire delay in filing the required reply from the due date for the reply until the filing of a grantable petition pursuant to 37 CFR 1.137(a) was unavoidable; and (4) any terminal disclaimer (and fee as set forth in 37 CFR 1.20(d)) required pursuant to 37 CFR 1.137(c).

The instant petition has been reviewed and found in compliance with the provisions of 37 CFR 1.137(a). See, MPEP 711.03(c) as relates to abandonment attributed to change of correspondence address. Accordingly, the failure to timely submit a proper reply to the Office communication is accepted as having been unavoidably delayed.

This application is being forwarded to Technology Center 1700 for further processing.

Telephone inquiries concerning this matter may be directed to the undersigned at 571-272-3205.

Alesia M. Brown
Petitions Attorney
Office of Petitions

UNITED STATES PATENT AND TRADEMARK OFFICE

UNITED STATES DEPARTMENT OF COMMERCE
United States Patent and Trademark Office
Address: COMMISSIONER FOR PATENTS
P.O. Box 1450
Alexandria, Virginia 22313-1450
www.uspto.gov

APPLICATION NO.	FILING DATE	FIRST NAMED INVENTOR	ATTORNEY DOCKET NO.	CONFIRMATION NO.
09/877,238	06/11/2001	Frederick J. Murphy	001223.00015	8640

32665 7590 11/09/2004

LESLIE MEYER-LEON, ESQ.
IP LEGAL STRATEGIES GROUP P.C.
1480 FALMOUTH ROAD
P.O. BOX 1210
CENTERVILLE, MA 02632-1210

EXAMINER
ROGERS, SCOTT A

ART UNIT	PAPER NUMBER
2626	

DATE MAILED: 11/09/2004

#14

Please find below and/or attached an Office communication concerning this application or proceeding.

UNITED STATES PATENT AND TRADEMARK OFFICE

COMMISSIONER FOR PATENTS
UNITED STATES PATENT AND TRADEMARK OFFICE
P.O. BOX 1450
ALEXANDRIA, VA 22313-1450
www.uspto.gov

Paper No. 14

LESLIE MEYER-LEON, ESQ.
IP LEGAL STRATEGIES GROUP P.C.
1480 FALMOUTH ROAD
P.O. BOX 1210
CENTERVILLE MA 02632-1210

In re Application of Frederick J. Murphy Application No. 09/877,238 Filed: June 11, 2001 For: **METHOD AND APPARATUS FOR INTERFACING A PLURALITY OF DEVICES TO A COMPUTER NETWORK**	Requirement for Information Pursuant to 37 C.F.R. §1.105 and Decision on Petition For Withdraw of Attorney

This is a Requirement for Information to Applicant pursuant to 37 C.F.R. §1.105, as well as a decision on the Request for Withdrawal as attorney, and also a decision on the request for continued suspension filed June 23, 2004.

Applicant of this application is required under 37 CFR 1.105 to provide the following information that the examiner has determined is reasonably necessary to the examination of this application.

Applicant has attempted to take action in the subject application including the filing of a revocation of power of attorney (paper No. 8) filed July 29, 2004. The subject application was filed as a divisional application wherein there is an assignment of record in the U.S. Patent and Trademark Office for parent application 08/555,911 which states that the inventor "..hereby confirm and ratify my prior sale, assignment and transfer to NetFax Incorporated...the full and exclusive right, title and interest in and to the invention which is the subject of United States Patent Application No. 08/555,911...and any and all Letters Patent which may be granted therefore in the United States and its territorial possessions and in any and all foreign countries, and in and to any and all divisions, reissues, continuations and extensions thereof."

Within the Request to Withdraw as attorney/agent of record filed August 13, 2004, it is alleged that the subject application is not in fact a divisional application of 08/555,911, but rather a continuation-in-part thereof.

Therefore, Applicant is required to explicitly set forth the subject matter which has been added to the invention disclosed in the parent application 08/555,911 to support Applicant's allegation that the instant application is a continuation-in-part as opposed to a divisional application. Specifically, Applicant must specify by reference to: the detailed description in the specification, if appropriate; the drawings, if appropriate; and the claims, if appropriate, specifically identifying the subject matter that has been added to the invention initially disclosed in the 08/555,911 application. Applicant must provide the aforementioned explicit information for at least one allegation of newly disclosed subject matter to support the alleged continuing status of this instant application.

The information is required to determine if the actions requested by the Applicant, i.e., the revocation of power of attorney of July 29, 2004, should have been granted by the Office.

This requirement is subject to the provisions of 37 CFR 1.134, 1.135 and 1.136 and has a shortened statutory period of 2 months. EXTENSIONS OF THIS TIME PERIOD MAY BE GRANTED UNDER 37 CFR 1.136(a).

As indicated, a shortened statutory period of 2 months is set for reply to the 37 CFR §1.105 requirement. Failure to respond to this requirement will result in the vacating of the Revocation of Attorney request filed July 29, 2004.

With respect to the request to withdraw, a grantable request to withdraw as attorney/agent of record must:

(1) indicate the present mailing address of the attorney(s)/agent(s) who seek(s) to withdraw, and
(2) be signed by each attorney/agent seeking to withdraw or clearly be signed on their behalf, and
(3) be *approved* at least thirty (30) days prior to the maximum extendable period for response to any outstanding Office Action, and
(4) indicate the address to which future correspondence should be mailed.

The request to withdraw was filed as a "Conditional" request. The Office will not process "Conditional" communications. In addition, the request to withdraw fails to indicate the address to which future correspondence should be mailed. Thus, the petition to withdraw is **Denied**.

With respect to Applicant's request for continuation of suspension until September 1, 2004.

MPEP § 1.103 Suspension of action by the Office, states in part:

(a) Suspension for cause . On request of the applicant, the Office may grant a suspension of action by the Office under this paragraph for good and sufficient cause. The Office will not suspend action if a reply by applicant to an Office action is outstanding. Any petition for suspension of action under this paragraph must specify a period of suspension not exceeding six months. Any petition for suspension of action under this paragraph must also include:

(1) A showing of good and sufficient cause for suspension of action; and
(2) The fee set forth in § 1.17(h), unless such cause is the fault of the Office.

Given that the requested time period for continuation of suspension has expired, Applicant's request is deemed **Moot**.

Joseph J. Rolla, Jr., Director
Technology Center 2600
Communications

UNITED STATES PATENT AND TRADEMARK OFFICE

Commissioner for Patents
United States Patent and Trademark Office
P.O. Box 1450
Alexandria, VA 22313-1450
www.uspto.gov

LESLIE MEYER-LEON, ESQ.
IP LEGAL STRATEGIES GROUP P.C.
1480 FALMOUTH ROAD
P.O. BOX 1210
CENTERVILLE MA 02632-1210

COPY MAILED

SEP 09 2005

OFFICE OF PETITIONS

In re Application of:	:
Murphy	:
Application No. 09/877,238	: ON PETITION
Filed: June 11, 2001,	:
PGPUB 20020036791A1 3/28/02.	:
Docket No.: 001223.00015	:

This is a decision on the petition filed November 1, 2004, under 37 CFR 1.182 asking that the USPTO determine whether the above-identified application is properly termed a divisional or a continuation-in-part (CIP) of a prior application.

The petition is **dismissed as immaterial**.

As background, the above-identified non-provisional application as filed, styled itself in both the transmittal latter and also in the first line of the specification as a divisional of prior non-provisional application no. 09/506,925 ('925) filed February 18, 2000, which in turn was asserted in the specification to be a divisional of prior non provisional application no. 09/184,972 filed November 3, 1998, which, in turn, was asserted to be a divisional of prior non provisional application no. 08/555,911('911) filed November 13, 1995.

The relationships required by 37 CFR 1.78(a)(2)(i) were thus determined by applicant, not the USPTO, in the priority claim that was recognized by the USPTO as shown by the filing receipt mailed December 18, 2001, and the appropriate entry on corresponding U.S. Patent Application Publication No. US 20020036791A1 published March 28, 2002.

Petitioner now wishes the USPTO to compare, on petition, the specifications of the aforementioned '925 application and the instant '238 application, and itself make the determination in the first instance that the more correct relationship is that of CIP rather than divisional. Petitioner observes that if the CIP relationship is determined to be governing herein by the USPTO, then the assignment executed by Murphy of the parent '911 application recorded at reel 8316 frame 76 conveying his entire rights title and interest to Netfax incorporated ("Netfax") will not carry to the instant application, such that Murphy would be presumed to retain his ownership interest in this application pursuant to 37 CFR 3.73(a). See e.g., MPEP 201.12.

It should be noted that 37 CFR 1.182 is not a mechanism for avoiding the requirements of the established rules and procedures. See Hicks v. Costello, 1903 Dec. Comm'r Pat. 123, 125 (1903). By its terms, 37 CFR 1.182 applies only when no other regulation speaks to the issue. However, 37 CFR 1.78(a)(2) specifically provides for benefit claims of prior divisional, or even prior CIP applications. Furthermore, inspection of the record herein reveals that the power of attorney comes directly from the named inventor. See the combined declaration power of

attorney filed December 10, 2001; revocation and power of attorney coupled with a change of address likewise executed by the named inventor filed July 29, 2004. There is no evidence that any putative assignee of the entire interest has sought to intervene herein and make the required showing to control prosecution to the exclusion of the named inventor within the meaning of 37 CFR 3.73(b) and MPEP 324. Accordingly, Murphy, as the named inventor, has an undiminished right to prosecute this application, including the right to file a timely amendment(s) to the priority claim of record. See 37 CFR 3.73(a). Thus, since Murphy contends that the relationship between the instant application and the '911 non-provisional requires correction, then a petition under 37 CFR 1.182–or for that matter 37 CFR 1.78-- is not required herein as a condition of amending the relationship. Rather, Murphy *himself* may propose such a conforming amendment under 37 CFR 1.111 and 1.121 consistent with his own determination, or changed determination, of the relationship at issue. See the following question and answer posted on the USPTO web site at http://www.uspto.gov/ web/offices/dcom/olia/aipa/18monthfaq.htm#cx:

> CX6. Applicant filed an application with a benefit claim to an earlier copending nonprovisional application. The benefit claim was filed within four months from the actual filing date of the application, but the relationship of the applications was designated as "continuation." If applicant wants to change the relationship to "continuation-in-part," would a petition under 37 CFR 1.78(a)(3) and the surcharge set forth in 37 CFR 1.17(t) be required? (added 4Feb2005)
>
> No, the petition under 37 CFR 1.78(a)(3) and the surcharge would not be required when applicant is changing the relationship in a benefit claim from "continuation" (or "divisional") to "continuation-in-part" or from "continuation-in-part" to "continuation" (or "divisional"), or from "continuation" to "divisional," because the Office was able to schedule the application for publication with the relationship given.

Accordingly, while the patent statue and rules of practice do not require that the USPTO perform the requested determination on behalf of petitioner, should petitioner wish to file an amendment changing his own statement of the relationship at issue, he is free to do so, subject, of course, to the stage of prosecution the application is in. See MPEP 201.11(F).

This application is being referred to the Technology Center.

Telephone inquiries related to this communication should be directed to the undersigned at (571) 272-3217.

Brian Hearn
Petitions Examiner
Office of Petitions

UNITED STATES PATENT AND TRADEMARK OFFICE

Commissioner for Patents
United States Patent and Trademark Office
P.O. Box 1450
Alexandria, VA 22313-1450
www.uspto.gov

LESLIE MEYER-LEON, ESQ.
IP LEGAL STRATEGIES GROUP P.C.
1480 FALMOUTH ROAD
P.O. BOX 1210
CENTERVILLE MA 02632-1210

MAILED

DEC 16 2005

DIRECTOR'S OFFICE
TECHNOLOGY CENTER 2600

In re Application of
Murphy, Frederick J.
Application No. 09/877,238
Filed: June 11, 2001
For: **METHOD AND APPARATUS FOR INTERFACING A PLURALITY OF DEVICES TO A COMPUTER NETWORK**

DECISION ON REQUEST TO WITHDRAW FROM RECORD

This is a decision on the Request for Withdrawal as Attorney(s) of record and change of address filed on July 14, 2005.

A grantable request to withdraw, as attorney/agent of record must:
(1) Indicate the present mailing address of the attorney(s)/agent(s) who seek(s) to withdraw, and
(2) Be signed by each attorney/agent seeking to withdraw or clearly be signed on their behalf, and
(3) Be *approved* at least thirty (30) days prior to the maximum extendable period for response to any outstanding Office Action, and
(4) Indicate the address to which future correspondence should be mailed.

Petitioner has met all of the above. Accordingly, the request is **GRANTED**.

All attorneys/agents associated with Customer Number 32665 in the request to withdraw are withdrawn.

All future communications from the Office will be directed to the below-listed address until otherwise notified by applicant. Applicant is reminded of the obligation to promptly notify the Patent and Trademark Office of any change in correspondence address to ensure receipt of all communications from the Office.

Kenneth A. Wieder
Special Program Examiner
Technology Center 2600
Communications
(571) 272-2986

Cc:

Frederick J. Murphy
126 Ambleside Drive
Falmouth, MA 02540

UNITED STATES PATENT AND TRADEMARK OFFICE

UNITED STATES DEPARTMENT OF COMMERCE
United States Patent and Trademark Office
Address: COMMISSIONER FOR PATENTS
P.O. Box 1450
Alexandria, Virginia 22313-1450
www.uspto.gov

APPLICATION NO.	FILING DATE	FIRST NAMED INVENTOR	ATTORNEY DOCKET NO.	CONFIRMATION NO.
09/877,239	06/11/2001	Frederick J. Murphy	001223.00016	8643

32665 7590 11/09/2004

LESLIE MEYER-LEON, ESQ.
IP LEGAL STRATEGIES GROUP P.C.
1480 FALMOUTH ROAD
P.O. BOX 1210
CENTERVILLE, MA 02632-1210

EXAMINER
ROGERS, SCOTT A

ART UNIT	PAPER NUMBER
2626	

DATE MAILED: 11/09/2004

#15

Please find below and/or attached an Office communication concerning this application or proceeding.

UNITED STATES PATENT AND TRADEMARK OFFICE

COMMISSIONER FOR PATENTS
UNITED STATES PATENT AND TRADEMARK OFFICE
P.O. BOX 1450
ALEXANDRIA, VA 22313-1450
www.uspto.gov

#15

Paper No. 15

LESLIE MEYER-LEON, ESQ.
IP LEGAL STRATEGIES GROUP P.C.
1480 FALMOUTH ROAD
P.O. BOX 1210
CENTERVILLE MA 02632-1210

In re Application of
Frederick J. Murphy :
Application No. 09/877,239 : DECISION ON REQUEST TO
Filed: June 11, 2001 : WITHDRAW FROM RECORD
For: **METHOD AND APPARATUS FOR DELIVERY OF FACSIMILE DOCUMENTS OVER A COMPUTER NETWORK**

This is a Requirement for Information to Applicant pursuant to 37 C.F.R. §1.105, as well as a decision on the Request for Withdrawal as attorney, and also a decision on the request for continued suspension filed June 23, 2004.

Applicant of this application is required under 37 CFR 1.105 to provide the following information that the examiner has determined is reasonably necessary to the examination of this application.

Applicant has attempted to take action in the subject application including the filing of a revocation of power of attorney (paper No. 8) filed July 29, 2004. The subject application was filed as a divisional application wherein there is an assignment of record in the U.S. Patent and Trademark Office for parent application 08/555,911 which states that the inventor "..hereby confirm and ratify my prior sale, assignment and transfer to NetFax Incorporated...the full and exclusive right, title and interest in and to the invention which is the subject of United States Patent Application No. 08/555,911...and any and all Letters Patent which may be granted therefore in the United States and its territorial possessions and in any and all foreign countries, and in and to any and all divisions, reissues, continuations and extensions thereof."

Within the Request to Withdraw as attorney/agent of record filed August 13, 2004, it is alleged that the subject application is not in fact a divisional application of 08/555,911, but rather a continuation-in-part thereof.

Therefore, Applicant is required to explicitly set forth the subject matter which has been added to the invention disclosed in the parent application 08/555,911 to support Applicant's allegation that the instant application is a continuation-in-part as opposed to a divisional application. Specifically, Applicant must specify by reference to: the detailed description in the specification, if appropriate; the drawings, if appropriate; and the claims, if appropriate, specifically identifying the subject matter that has been added to the invention initially disclosed in the 08/555,911 application. Applicant must provide the aforementioned explicit information for at least one allegation of newly disclosed subject matter to support the alleged continuing status of this instant application.

The information is required to determine if the actions requested by the Applicant, i.e., the revocation of power of attorney of July 29, 2004, should have been granted by the Office.

This requirement is subject to the provisions of 37 CFR 1.134, 1.135 and 1.136 and has a shortened statutory period of 2 months. EXTENSIONS OF THIS TIME PERIOD MAY BE GRANTED UNDER 37 CFR 1.136(a).

As indicated, a shortened statutory period of 2 months is set for reply to the 37 CFR §1.105 requirement. Failure to respond to this requirement will result in the vacating of the Revocation of Attorney request filed July 29, 2004.

With respect to the request to withdraw, a grantable request to withdraw as attorney/agent of record must:

(1) indicate the present mailing address of the attorney(s)/agent(s) who seek(s) to withdraw, and
(2) be signed by each attorney/agent seeking to withdraw or clearly be signed on their behalf, and
(3) be *approved* at least thirty (30) days prior to the maximum extendable period for response to any outstanding Office Action, and
(4) indicate the address to which future correspondence should be mailed.

The request to withdraw was filed as a "Conditional" request. The Office will not process "Conditional" communications. In addition, the request to withdraw fails to indicate the address to which future correspondence should be mailed. Thus, the petition to withdraw is **Denied**.

With respect to Applicant's request for continuation of suspension until September 1, 2004.

MPEP § 1.103 Suspension of action by the Office, states in part:

(a) Suspension for cause . On request of the applicant, the Office may grant a suspension of action by the Office under this paragraph for good and sufficient cause. The Office will not suspend action if a reply by applicant to an Office action is outstanding. Any petition for suspension of action under this paragraph must specify a period of suspension not exceeding six months. Any petition for suspension of action under this paragraph must also include:

(1) A showing of good and sufficient cause for suspension of action; and
(2) The fee set forth in § 1.17(h), unless such cause is the fault of the Office.

Given that the requested time period for continuation of suspension has expired, Applicant's request is deemed **Moot**.

Joseph J. Rolla, Jr., Director
Technology Center 2600
Communications

UNITED STATES PATENT AND TRADEMARK OFFICE

Commissioner for Patents
United States Patent and Trademark Office
P.O. Box 1450
Alexandria, VA 22313-1450
www.uspto.gov

LESLIE MEYER-LEON, ESQ.
IP LEGAL STRATEGIES GROUP P.C.
1480 FALMOUTH ROAD
P.O. BOX 1210
CENTERVILLE MA 02632-1210

COPY MAILED

AUG 30 2005

OFFICE OF PETITIONS

In re Application of:	:
Murphy	:
Application No. 09/877,239	: ON PETITION
Filed: June 11, 2001,	:
PGPUB 20020033961A1 3/21/02.	:
Docket No.: 0503-002US3	:

This is a decision on the petition filed November 1, 2004, under 37 CFR 1.182 asking that the USPTO determine whether the above-identified application is properly termed a divisional or a continuation-in-part (CIP) of a prior application.

The petition is **dismissed as immaterial**.

As background, the above-identified non-provisional application as filed, styled itself in both the transmittal latter and also in the first line of the specification as a divisional of prior non-provisional application no. 09/506,925 ('925) filed February 18, 2000, which in turn was asserted in the specification to be a divisional of prior non provisional application no. 09/184,972 filed November 3, 1998, which, in turn, was asserted to be a divisional of prior non provisional application no. 08/555,911('911) filed November 13, 1995.

The relationships required by 37 CFR 1.78(a)(2)(i) were thus determined by applicant, not the USPTO, in the priority claim that was recognized by the USPTO as shown by the filing receipt mailed December 13, 2001, and the appropriate entry on corresponding U.S. Patent Application Publication No. US 20020033961A1 published March 21, 2002.

Petitioner now wishes the USPTO to compare, on petition, the specifications of the aforementioned '925 application and the instant '239 application, and itself make the determination in the first instance that the more correct relationship is that of CIP rather than divisional. Petitioner observes that if the CIP relationship is determined to be governing herein by the USPTO, then the assignment executed by Murphy of the parent '911 application recorded at reel 8316 frame 76 conveying his entire rights title and interest to Netfax incorporated ("Netfax") will not carry to the instant application, such that Murphy would be presumed to retain his ownership interest in this application pursuant to 37 CFR 3.73(a). See e.g., MPEP 201.12.

It should be noted that 37 CFR 1.182 is not a mechanism for avoiding the requirements of the established rules and procedures. See Hicks v. Costello, 1903 Dec. Comm'r Pat. 123, 125 (1903). By its terms, 37 CFR 1.182 applies only when no other regulation speaks to the issue. However, 37 CFR 1.78(a)(2) specifically provides for benefit claims of prior divisional, or even prior CIP applications. Furthermore, inspection of the record herein reveals that the power of attorney comes directly from the named inventor. See the combined declaration power of

attorney filed December 6, 2001; revocation and power of attorney coupled with a change of address likewise executed by the named inventor filed July 29, 2004. There is no evidence that any putative assignee of the entire interest has sought to intervene herein and make the required showing to control prosecution to the exclusion of the named inventor within the meaning of 37 CFR 3.73(b) and MPEP 324. Accordingly, Murphy, as the named inventor, has an undiminished right to prosecute this application, including the right to file a timely amendment(s) to the priority claim of record. See 37 CFR 3.73(a). Thus, since Murphy contends that the relationship between the instant application and the '911 non-provisional requires correction, then a petition under 37 CFR 1.182–or for that matter 37 CFR 1.78-- is not required herein as a condition of amending the relationship. Rather, Murphy *himself* may propose such a conforming amendment consistent with his own determination, or changed determination, of the relationship at issue. See the following question and answer posted on the USPTO web site at http://www.uspto.gov/ web/offices/dcom/olia/aipa/18monthfaq.htm#cx:

> CX6. Applicant filed an application with a benefit claim to an earlier copending nonprovisional application. The benefit claim was filed within four months from the actual filing date of the application, but the relationship of the applications was designated as "continuation." If applicant wants to change the relationship to "continuation-in-part," would a petition under 37 CFR 1.78(a)(3) and the surcharge set forth in 37 CFR 1.17(t) be required? (added 4Feb2005)
>
> No, the petition under 37 CFR 1.78(a)(3) and the surcharge would not be required when applicant is changing the relationship in a benefit claim from "continuation" (or "divisional") to "continuation-in-part" or from "continuation-in-part" to "continuation" (or "divisional"), or from "continuation" to "divisional," because the Office was able to schedule the application for publication with the relationship given.

Accordingly, while the patent statue and rules of practice do not require that the USPTO perform the requested determination on behalf of petitioner, should petitioner wish to file an amendment changing his own statement of the relationship at issue, he is free to do so, subject, of course, to the stage of prosecution the application is in. See MPEP 201.11(F).

This application is being referred to the Technology Center.

Telephone inquiries related to this communication should be directed to the undersigned at (571) 272-3217.

Brian Hearn
Petitions Examiner
Office of Petitions

UNITED STATES PATENT AND TRADEMARK OFFICE

Commissioner for Patents
United States Patent and Trademark Office
P.O. Box 1450
Alexandria, VA 22313-1450
www.uspto.go

MAILED

DEC 16 2005

DIRECTOR'S OFFICE
TECHNOLOGY CENTER 2600

LESLIE MEYER-LEON, ESQ.
IP LEGAL STRATEGIES GROUP P.C.
1480 FALMOUTH ROAD
P.O. BOX 1210
CENTERVILLE MA 02632-1210

In re Application of	:	
MURPHY, FREDERICK J.	:	
Application No. 09/877,239	:	DECISION ON REQUEST TO
Filed: June 11, 2001	:	WITHDRAW FROM RECORD
For: **METHOD AND APPARATUS FOR DELIVERY OF FACSIMILE DOCUMENTS OVER A COMPUTER NETWORK**	:	

This is a decision on the request to withdraw as attorney/agent of record filed on July 14, 2005.

A grantable request to withdraw as attorney/agent of record must:
(1) Indicate the present mailing address of the attorney(s)/agent(s) who seek(s) to withdraw, and
(2) Be signed by each attorney/agent seeking to withdraw or clearly be signed on their behalf, and
(3) Be *approved* at least thirty (30) days prior to the maximum extendable period for response to any outstanding Office Action, and
(4) Indicate the address to which future correspondence should be mailed.

All attorneys/agents associated with Customer Number 32665 have been withdrawn.

Petitioner has satisfied the requirements for successfully requesting withdrawal. Accordingly, *the request is* ***granted.*** Future correspondence will be sent to the below address which has been provided by the withdrawing attorney(s).

Kenneth A. Wieder
Special Program Examiner
Technology Center 2600
Communications

cc:

Frederick J. Murphy
126 Ambleside Drive
Falmouth, MA 02540

UNITED STATES PATENT AND TRADEMARK OFFICE

UNITED STATES DEPARTMENT OF COMMERCE
United States Patent and Trademark Office
Address: COMMISSIONER FOR PATENTS
P.O. Box 1450
Alexandria, Virginia 22313-1450
www.uspto.gov

APPLICATION NO.	FILING DATE	FIRST NAMED INVENTOR	ATTORNEY DOCKET NO.	CONFIRMATION NO.
09/877,240	06/11/2001	Frederick J. Murphy	001223.00014	8631

32665 7590 11/09/2004

LESLIE MEYER-LEON, ESQ.
IP LEGAL STRATEGIES GROUP P.C.
1480 FALMOUTH ROAD
P.O. BOX 1210
CENTERVILLE, MA 02632-1210

EXAMINER
ROGERS, SCOTT A

ART UNIT	PAPER NUMBER
2626	

DATE MAILED: 11/09/2004

#14

Please find below and/or attached an Office communication concerning this application or proceeding.

UNITED STATES PATENT AND TRADEMARK OFFICE

COMMISSIONER FOR PATENTS
UNITED STATES PATENT AND TRADEMARK OFFICE
P.O. BOX 1450
ALEXANDRIA, VA 22313-1450
www.uspto.gov

Paper No. 14

LESLIE MEYER-LEON, ESQ.
IP LEGAL STRATEGIES GROUP P.C.
1480 FALMOUTH ROAD
P.O. BOX 1210
CENTERVILLE MA 02632-1210

In re Application of
Frederick J. Murphy :
Application No. 09/877,240 : DECISION ON REQUEST TO
Filed: June 11, 2001 : WITHDRAW FROM RECORD
For: **METHOD AND APPARATUS FOR DELIVERY OF DIGITAL IMAGES OVER A COMPUTER NETWORK**

This is a Requirement for Information to Applicant pursuant to 37 C.F.R. §1.105, as well as a decision on the Request for Withdrawal as attorney, and also a decision on the request for continued suspension filed June 23, 2004.

Applicant of this application is required under 37 CFR 1.105 to provide the following information that the examiner has determined is reasonably necessary to the examination of this application.

Applicant has attempted to take action in the subject application including the filing of a revocation of power of attorney (paper No. 8) filed July 29, 2004. The subject application was filed as a divisional application wherein there is an assignment of record in the U.S. Patent and Trademark Office for parent application 08/555,911 which states that the inventor "..hereby confirm and ratify my prior sale, assignment and transfer to NetFax Incorporated...the full and exclusive right, title and interest in and to the invention which is the subject of United States Patent Application No. 08/555,911...and any and all Letters Patent which may be granted therefore in the United States and its territorial possessions and in any and all foreign countries, and in and to any and all divisions, reissues, continuations and extensions thereof."

Within the Request to Withdraw as attorney/agent of record filed August 13, 2004, it is alleged that the subject application is not in fact a divisional application of 08/555,911, but rather a continuation-in-part thereof.

Therefore, Applicant is required to explicitly set forth the subject matter which has been added to the invention disclosed in the parent application 08/555,911 to support Applicant's allegation that the instant application is a continuation-in-part as opposed to a divisional application. Specifically, Applicant must specify by reference to: the detailed description in the specification, if appropriate; the drawings, if appropriate; and the claims, if appropriate, specifically identifying the subject matter that has been added to the invention initially disclosed in the 08/555,911 application. Applicant must provide the aforementioned explicit information for at least one allegation of newly disclosed subject matter to support the alleged continuing status of this instant application.

The information is required to determine if the actions requested by the Applicant, i.e., the revocation of power of attorney of July 29, 2004, should have been granted by the Office.

This requirement is subject to the provisions of 37 CFR 1.134, 1.135 and 1.136 and has a shortened statutory period of 2 months. EXTENSIONS OF THIS TIME PERIOD MAY BE GRANTED UNDER 37 CFR 1.136(a).

As indicated, a shortened statutory period of 2 months is set for reply to the 37 CFR §1.105 requirement. Failure to respond to this requirement will result in the vacating of the Revocation of Attorney request filed July 29, 2004.

With respect to the request to withdraw, a grantable request to withdraw as attorney/agent of record must:

(1) indicate the present mailing address of the attorney(s)/agent(s) who seek(s) to withdraw, and
(2) be signed by each attorney/agent seeking to withdraw or clearly be signed on their behalf, and
(3) be *approved* at least thirty (30) days prior to the maximum extendable period for response to any outstanding Office Action, and
(4) indicate the address to which future correspondence should be mailed.

The request to withdraw was filed as a "Conditional" request. The Office will not process "Conditional" communications. In addition, the request to withdraw fails to indicate the address to which future correspondence should be mailed. Thus, the petition to withdraw is **Denied**.

With respect to Applicant's request for continuation of suspension until September 1, 2004.

MPEP § 1.103 Suspension of action by the Office, states in part:

(a) Suspension for cause . On request of the applicant, the Office may grant a suspension of action by the Office under this paragraph for good and sufficient cause. The Office will not suspend action if a reply by applicant to an Office action is outstanding. Any petition for suspension of action under this paragraph must specify a period of suspension not exceeding six months. Any petition for suspension of action under this paragraph must also include:

(1) A showing of good and sufficient cause for suspension of action; and
(2) The fee set forth in § 1.17(h), unless such cause is the fault of the Office.

Given that the requested time period for continuation of suspension has expired, Applicant's request is deemed **Moot**.

Joseph J. Rolla, Jr., Director
Technology Center 2600
Communications

UNITED STATES PATENT AND TRADEMARK OFFICE

Commissioner for Patents
United States Patent and Trademark Office
P.O. Box 1450
Alexandria, VA 22313-1450
www.uspto.gov

LESLIE MEYER-LEON, ESQ.
IP LEGAL STRATEGIES GROUP P.C.
1480 FALMOUTH ROAD
P.O. BOX 1210
CENTERVILLE MA 02632-1210

COPY MAILED

SEP 0 9 2005

OFFICE OF PETITIONS

In re Application of:	:
Murphy	:
Application No. 09/877,240	: ON PETITION
Filed: June 11, 2001	:
PGPUB 20020036792A1 3/28/02.	:
Docket No.: 001223.00014	:

This is a decision on the petition filed November 1, 2004, under 37 CFR 1.182 asking that the USPTO determine whether the above-identified application is properly termed a divisional or a continuation-in-part (CIP) of a prior application.

The petition is **dismissed as immaterial**.

As background, the above-identified non-provisional application as filed, styled itself in both the transmittal latter and also in the first line of the specification as a divisional of prior non-provisional application no. 09/506,925 ('925) filed February 18, 2000, which in turn was asserted in the specification to be a divisional of prior non provisional application no. 09/184,972 filed November 3, 1998, which, in turn, was asserted to be a divisional of prior non provisional application no. 08/555,911('911) filed November 13, 1995.

The relationships required by 37 CFR 1.78(a)(2)(i) were thus determined by applicant, not the USPTO, in the priority claim that was recognized by the USPTO as shown by the filing receipt mailed December 17, 2001, and the appropriate entry on corresponding U.S. Patent Application Publication No. US 20020036791A1 published March 28, 2002.

Petitioner now wishes the USPTO to compare, on petition, the specifications of the aforementioned '925 application and the instant '238 application, and itself make the determination in the first instance that the more correct relationship is that of CIP rather than divisional. Petitioner observes that if the CIP relationship is determined to be governing herein by the USPTO, then the assignment executed by Murphy of the parent '911 application recorded at reel 8316 frame 76 conveying his entire rights title and interest to Netfax incorporated ("Netfax") will not carry to the instant application, such that Murphy would be presumed to retain his ownership interest in this application pursuant to 37 CFR 3.73(a). See e.g., MPEP 201.12.

It should be noted that 37 CFR 1.182 is not a mechanism for avoiding the requirements of the established rules and procedures. See Hicks v. Costello, 1903 Dec. Comm'r Pat. 123, 125 (1903). By its terms, 37 CFR 1.182 applies only when no other regulation speaks to the issue. However, 37 CFR 1.78(a)(2) specifically provides for benefit claims of prior divisional, or even prior CIP applications. Furthermore, inspection of the record herein reveals that the power of attorney comes directly from the named inventor. See the combined declaration power of

attorney filed December 10, 2001; revocation and power of attorney coupled with a change of address likewise executed by the named inventor filed July 29, 2004. There is no evidence that any putative assignee of the entire interest has sought to intervene herein and make the required showing to control prosecution to the exclusion of the named inventor within the meaning of 37 CFR 3.73(b) and MPEP 324. Accordingly, Murphy, as the named inventor, has an undiminished right to prosecute this application, including the right to file a timely amendment(s) to the priority claim of record. See 37 CFR 3.73(a). Thus, since Murphy contends that the relationship between the instant application and the '911 non-provisional requires correction, then a petition under 37 CFR 1.182–or for that matter 37 CFR 1.78-- is not required herein as a condition of amending the relationship. Rather, Murphy *himself* may propose such a conforming amendment under 37 CFR 1.111 and 1.121 consistent with his own determination, or changed determination, of the relationship at issue. See the following question and answer posted on the USPTO web site at http://www.uspto.gov/ web/offices/dcom/olia/aipa/18monthfaq.htm#cx:

> CX6. Applicant filed an application with a benefit claim to an earlier copending nonprovisional application. The benefit claim was filed within four months from the actual filing date of the application, but the relationship of the applications was designated as "continuation." If applicant wants to change the relationship to "continuation-in-part," would a petition under 37 CFR 1.78(a)(3) and the surcharge set forth in 37 CFR 1.17(t) be required? (added 4Feb2005)
>
> No, the petition under 37 CFR 1.78(a)(3) and the surcharge would not be required when applicant is changing the relationship in a benefit claim from "continuation" (or "divisional") to "continuation-in-part" or from "continuation-in-part" to "continuation" (or "divisional"), or from "continuation" to "divisional," because the Office was able to schedule the application for publication with the relationship given.

Accordingly, while the patent statue and rules of practice do not require that the USPTO perform the requested determination on behalf of petitioner, should petitioner wish to file an amendment changing his own statement of the relationship at issue, he is free to do so, subject, of course, to the stage of prosecution the application is in. See MPEP 201.11(F).

This application is being referred to the Technology Center.

Telephone inquiries related to this communication should be directed to the undersigned at (571) 272-3217.

Brian Hearn
Petitions Examiner
Office of Petitions

UNITED STATES PATENT AND TRADEMARK OFFICE

Commissioner for Patents
United States Patent and Trademark Office
P.O. Box 1450
Alexandria, VA 22313-1450
www.uspto.gov

LESLIE MEYER-LEON, ESQ.
IP LEGAL STRATEGIES GROUP P.C.
1480 FALMOUTH ROAD
P.O. BOX 1210
CENTERVILLE MA 02632-1210

MAILED

DEC 16 2005

DIRECTOR'S OFFICE
TECHNOLOGY CENTER 2600

In re Application of
Murphy, Frederick J.
Application No. 09/877,240
Filed: June 11, 2001
For: **METHOD AND APPARATUS FOR DELIVERY OF DIGITAL IMAGES OVER A COMPUTER NETWORK**

DECISION ON REQUEST TO WITHDRAW FROM RECORD

This is a decision on the Request for Withdrawal as Attorney(s) of record and change of address filed on July 14, 2005.

A grantable request to withdraw, as attorney/agent of record must:
(1) Indicate the present mailing address of the attorney(s)/agent(s) who seek(s) to withdraw, and
(2) Be signed by each attorney/agent seeking to withdraw or clearly be signed on their behalf, and
(3) Be *approved* at least thirty (30) days prior to the maximum extendable period for response to any outstanding Office Action, and
(4) Indicate the address to which future correspondence should be mailed.

Petitioner has met all of the above. Accordingly, the request is **GRANTED**.

All attorneys/agents associated with Customer Number 32665 in the request to withdraw are withdrawn.

All future communications from the Office will be directed to the below-listed address until otherwise notified by applicant. Applicant is reminded of the obligation to promptly notify the Patent and Trademark Office of any change in correspondence address to ensure receipt of all communications from the Office.

Kenneth A. Wieder
Special Program Examiner
Technology Center 2600
Communications
(571) 272-2986

Cc:

Frederick J. Murphy
126 Ambleside Drive
Falmouth, MA 02540

SPE: H. Nguyen

SPE RESPONSE FOR CERTIFICATE OF CORRECTION

Paper No.: _____

DATE : 9/13/04

TO SPE OF : ART UNIT 2627

SUBJECT : Request for Certificate of Correction for Appl. No.: 09/827248 Patent No.: 7035191

Please respond to this request for a certificate of correction within 7 days.

Please review the requested changes/corrections as shown in the **COCIN** document(s) in the IFW application image. No new matter should be introduced, nor should the scope or meaning of the claims be changed.

Please complete the response (see below) and forward the completed response to scanning using document code **COCX**.

Lamonte M. Newsome
Certificates of Correction Branch
703-308-9390 ext. 112

Thank You For Your Assistance

The request for issuing the above-identified correction(s) is hereby:
Note your decision on the appropriate box.

- ☒ **Approved** — All changes apply.
- ☐ **Approved in Part** — Specify below which changes **do not** apply.
- ☐ **Denied** — State the reasons for denial below.

Comments: The Certificate of Correction is OK to be entered

HOA T. NGUYEN
SUPERVISORY PATENT EXAMINER
TECHNOLOGY CENTER 2600
9/14/07

SPE

2627
Art Unit

PTO/SB/ 44 (08-00)
Approved for use through 09/30/2000. OMB 0651-0033
U.S. Patent and Trademark Office; U.S. DEPARTMENT OF COMMERCE
Under the Paperwork Reduction Act of 1995, no persons are required to respond to a collection of information unless it displays a valid OMB control number.
(Also Form PTO-1050)

UNITED STATES PATENT AND TRADEMARK OFFICE

CERTIFICATE OF CORRECTION

PATENT NO : 7,035,191

DATED : April 25, 2006

INVENTOR(S) : Jang-hoon YOO, et al.

Ok
8/8/07

Title Page, Item (56) References Cited, insert

–6,674,709	1/2004	Asada et al.
6,084,843	7/2000	Abe et al.
6,574,182	6/2003	Yamada et al.
6,594,042	7/2003	Asada et al.–.

Column 10, line 19, change "oath" to –path–.

MAILING ADDRESS OF SENDER:
STEIN, MCEWEN & BUI, LLP
1400 Eye St., N.W.
Suite 300
Washington, DC 20005

PATENT NO. 7,035,191

No. of add'l copies
@ 50¢ per page

⇒

AUG 29 2006

UNITED STATES PATENT AND TRADEMARK OFFICE

Commissioner for Patents
United States Patent and Trademark Office
P.O. Box 1450
Alexandria, VA 22313-1450
www.uspto.gov

JUL 30 2004

MILLEN, WHITE, ZELANO & BRANIGAN, P.C.
2200 CLARENDON BOULEVARD
ARLINGTON, VA 22201

In re Application of	:
Michael Schmidt et al	:
Serial No.: 09/877,259	: PETITION DECISION
Filed: June 11, 2001	:
Attorney Docket No.: MERCK2272	:

This is in response to the petition under 37 CFR 1.181, filed June 10, 2004 requesting a withdrawal of the Restriction requirement of April 21,2003.

BACKGROUND

A review of the file history shows that the application was accepted under 35 U.S.C. 111 on June 11, 2001. The application as filed contained claims 1-11. In the first office action mailed February 10, 2003 the examiner set forth a restriction requirement under 35 U.S.C. 121 dividing the claims into 3 groups and requiring an election of species within the first group if elected, as follows:

> Group I, Claims 1-7, drawn to an ionic liquid, classified in class 252, subclass 62.2.
> Group II, Claims 8, 10-11, drawn to an electrochemical cell and an electrolyte composition, classified in class 429, subclass 188.
> Group III. Claim 9, drawn to a capacitor, classified in class 361, subclass 503.

Applicants responded on March 6, 2003, electing Group I, with traverse, and electing a species as required. In the traversal, Applicants argued that the groups were not an intermediate/final product as the examiner had stated but a combination/subcombination that required a two-way distinction.

Upon the election of Group I the application was transferred from Art Unit 1754 to Art Unit 1626 where the ionic liquid structure is examined.

A first action on the merits was sent out on April 21, 2003. In this action, the examiner responded to applicant's traverse by stating that indeed the Groups were not related as intermediate/final products but as products and processes but retained the same three groups. The restriction was not made final at this time.

In a response by Applicants on July 21, 2003 to the first office action, Applicants again stated

that the groups were not related by a product and process of using but by a combination /subcombination and requested a removal of the restriction.
On December 17, 2003 the action was made final.

DISCUSSION

Upon review of the restriction requirement, it is noted that the three groups represent combination/subcombination relationships as stated by the Applicant.
There has been no two-way distinction shown. The subcombination is essential to the combination and there is no evidence that combination is patentable without the details of the subcombination. See MPEP 806.05(c).

In this instance the subcombination which is the ionic liquid constitutes the essential distinguishing feature of the combination as claimed (e.g. capacitor using said ionic liquid or the electrochemical cell using said ionic liquid) and therefore the inventions are not distinct and a requirement for restriction between the combination and subcombinations should not have been made, even though the subcombination has separate utility.

The petition is **GRANTED**.

It is noted that there are many core structures encompassed within Group I. The examiner may revalute the propriety of a restriction requirement among said structures.

The application will be forwarded to the examiner for further action.

Should there be any questions about this decision please contact Jean F. Vollano by letter addressed to Director, TC 1600, at the address listed above, or by telephone at 571-272-0648 or by facsimile sent to the general Office facsimile number.

Bruce M. Kisliuk
Director, Technology Center 1600

UNITED STATES PATENT AND TRADEMARK OFFICE

Commissioner for Patents
United States Patent and Trademark Office
P.O. Box 1450
Alexandria, VA 22313-1450
www.uspto.gov

SEP 23 2005

MILLEN WHITE ZELANO & BRANIGAN, PC
2200 CLARENDON BOULEVARD
ARLINGTON, VA 22201

In re Application of	:
Michael Schmidt et al	:
Serial No.: 09/877,259	: PETITION DECISION
Filed: June 11, 2001	:
Attorney Docket No.: MERCK2272	:

This is in response to the petition under 37 CFR 1.144, filed July 15, 2005, requesting withdrawal of an improper restriction requirement.

BACKGROUND

A review of the file history shows that a petition decision with regard to a previous restriction requirement was mailed to applicants on July 30, 2004, which contained a file history to that point intime and granted applicants request to withdraw the restriction requirement as based on a proper combination/subcombination relationship. The decision did not prohibit a different type of restriction requirement being made.

In view thereof a new examiner mailed a new Office action to applicants on November 15, 2004, setting forth a new restriction requirement, as follows:

Group I – Claims 1-11 and 14-20, drawn to an ionic liquid where K^+ is a pyridinium ring, and an electric cell and capacitor utilizing the ionic liquid;

Group II – Claims 1-11 and 14-20, drawn to an ionic liquid where K^+ is a pyridazinium ring, and an electric cell and capacitor utilizing the ionic liquid;

Group III – Claims 1-11 and 14-20, drawn to an ionic liquid where K^+ is a pyrimidinium ring, and an electric cell and capacitor utilizing the ionic liquid.

Group IV – Claims 1-11 and 14-20, drawn to an ionic liquid where K^+ is a pyrazinium ring, and an electric cell and capacitor utilizing the ionic liquid;

Group V – Claims 1-20, drawn to an ionic liquid where K^+ is an imidazolium ring, and an electric cell and capacitor utilizing the ionic liquid;

Group VI – Claims 1-11 and 14-20, drawn to an ionic liquid where K^+ is a thiazolium ring, and an electric cell and capacitor utilizing the ionic liquid;

Group VII – Claims 1-11 and 14-20, drawn to an ionic liquid where K^+ is a oxazolium ring, and an electric cell and capacitor utilizing the ionic liquid;

Group VIII – Claims 1-11 and 14-20, drawn to an ionic liquid where K^+ is a 1,2,4-triazolium ring, and an electric cell and capacitor utilizing the ionic liquid.

The examiner argued that the various groups were separate and distinct and consideration of all would impose an undue burden on the Office. The examiner also required an election of species within the group elected.

Applicants replied on December 1, 2004, adding claims 21-28, electing Group V and a species within the Group and traversing the requirement as unjust in that all of the species were treated by the previous examiner and that restricting within a claim is improper. Also, that where all of the compounds are linked together, as here, by a common anion restriction is improper and that these cations can all be found in a single document.

The examiner mailed a non-Final Office action to applicants on February 16, 2005, noting applicants' traversal thereof and responding to it. The requirement was made Final. The examiner then rejected claim 25 under 35 U.S.C. 112, first paragraph, for lack of written description and claims 1-20 and 25 under 35 U.S.C. 112, second paragraph, as indefinite. Claims 1-11, 14-18 and 25 were rejected under 35 USC 103(a) as unpatentable over Koch et al in view of Heider et al ('454 and '212) and Hilarius et al.

Applicants replied on July 15, 2005, by amending claims 1, 3, 14 and 21-28 Applicants responded to each of the rejections. Applicants also filed this petition to address the restriction requirement.

DISCUSSION

Applicants request that the restriction requirement be reviewed with respect to the decisions of *In re Haas et al* and *In re Weber et al*, as to whether restriction within a claim is proper. Applicants argue that the decisions reflect that it is improper to restrict within a claim as that in effect prevents full examination of that claim. However, the subject matter within a claim containing a Markush group must have unity within the subject matter claimed. Applicants then suggest that the subject matter should be examined under the guidelines of M.P.E.P. 803.02 in that the examiner should have required an election of species. Applicants further suggest that Anion A which is not a variable of the magnitude of K should be considered the core or unifying structure and be searched first to see if any of the structures represented by K are associated with it.

Applicants' arguments are noted. Applicants' understanding of *In re Haas et al* and *In re Weber et al* is generally correct. Where there is a unifying concept in a Markush group restriction is improper, although election of species is permitted in order to identify a starting point for examination of large Markush groups. (However, where there is no unifying concept restriction within a Markush group is permitted.) Here the compound is comprised of two parts: A is a fluoro organophosphorous anion of relatively simple construction; variable K is comprised of various heterocyclic cations. As suggested by applicants unity is provided by the relatively invariant anion. Thus restriction within the Markush group, in this instance, is improper. The examiner's restriction requirement will be considered as an election of species requirement where the species have been identified by their base ring structure. As applicants have elected a

species and examination on the species has proceeded with the species currently being rejected over prior art, no further remedy need be considered at this time.

DECISION

The petition is **GRANTED.** The restriction requirement is redesignated as an election of species requirement to which a proper response has been made.

The application will be forwarded to the examiner for consideration of the amendment filed July 15, 2005, and further action not inconsistent with this decision.

Should there be any questions about this decision please contact William R. Dixon, Jr., by letter addressed to Director, TC 1600, at the address listed above, or by telephone at 703-308-3824 or by facsimile sent to the general Office facsimile number, 703-872-9306.

George C. Elliott

George C. Elliott
Director, Technology Center 1600

#8
6/13/02

UNITED STATES PATENT AND TRADEMARK OFFICE

COMMISSIONER FOR PATENTS
UNITED STATES PATENT AND TRADEMARK OFFICE
WASHINGTON, D.C. 20231
www.uspto.gov

JUN 13 2002

Paper No. 8

HOGAN & HARTSON LLP
One Tabor Center
1200 17th Street, Suite 1500
Denver, CO 80202

In re Application of: Jean-Pierre Ruster, et al.	)	
Application No. 09/877,263	)	
Filed: June 8, 2001	)	**DECISION ON REQUEST FOR**
For: SYSTEM AND METHOD FOR	)	**WITHDRAWAL AS ATTORNEY**
CACHING DATA STREAMS ON A	)	
STORAGE MEDIA	)	

This is a decision on the Request To Withdraw from Representation filed May 10, 2002.

A grantable request to withdraw as attorney of record should indicate thereon the present mailing addresses of the attorney(s) who is/are withdrawing from the record and of the applicant. The request for withdrawal must be signed by every attorney seeking to withdraw or contain a clear indication that one attorney is signing on behalf of another/others. A request to withdraw will not be approved unless at least 30 (thirty) days would remain between the date of approval and the later of the expiration date of a time to file a response or the expiration date of the maximum time period which can be extended under 37 C.F.R. § 1. 136(a). The effective date of withdrawal being the date of decision and not the date of request. See M.P.E.P. § 402.06. 37 C.F.R. § 1.36 further requires that the applicant or patent owner be notified of the withdrawal of the attorney or agent.

The request is **GRANTED**.

All future communications from the Office will be directed to the below-listed address until otherwise notified by applicant. This correspondence address is provided by the withdrawn attorney(s). Applicant is reminded of the obligation to promptly notify the Patent and Trademark Office (Office) of any change in correspondence address to ensure receipt of all communications from the Office.

Vincent N. Trans
Special Programs Examiner
Technology Center 2100
Computer Architecture, Software,
and Electronic Commerce
(703) 305-9750

cc: Paul Hansra
3705 Canterbury Lane, Apt. 6
Bellingham, WA 98225

UNITED STATES PATENT AND TRADEMARK OFFICE

Commissioner for Patents
United States Patent and Trademark Office
P.O. Box 1450
Alexandria, VA 22313-1450
www.uspto.gov

COPY MAILED

APR 0 6 2006

OFFICE OF PETITIONS

VISTA PRINT USA INC.
ATTN: PATENT COUNSEL
100 HAYDEN AVENUE
LEXINGTON MA 02421

In re Application of	:	
Steven Jecha et al	:	
Application No. 09/877,266	:	ON PETITION
Filed: June 8, 2001	:	
Attorney Docket No. 685.001US2	:	

This is a decision on the petition, filed April 4, 2006, under 37 CFR 1.313(c)(2) to withdraw the above-identified application from issue after payment of the issue fee.

The petition is **GRANTED**.

The above-identified application is withdrawn from issue for consideration of a submission under 37 CFR 1.114 (request for continued examination). See 37 CFR 1.313(c)(2).

Petitioner is advised that the issue fee paid on February 6, 2006, in the above-identified application cannot be refunded. If, however, the above-identified application is again allowed, petitioner may request that it be applied towards the issue fee required by the new Notice of Allowance.[1]

Telephone inquiries should be directed to the undersigned at (571) 272-3208.

The examiner of Technology Center AU 3624 will consider the request for continued examination under 37 CFR 1.114.

Karen Creasy
Petitions Examiner
Office of Petitions

---

[1] The request to apply the issue fee to the new Notice may be satisfied by completing and returning the new Issue Fee Transmittal Form PTOL-85(b), which includes the following language thereon: "Commissioner for Patents is requested to apply the Issue Fee and Publication Fee (if any) or re-apply any previously paid issue fee to the application identified above." Petitioner is advised that, whether a fee is indicated as being due or not, the Issue Fee Transmittal Form **must** be completed and timely submitted to avoid abandonment. Note the language in bold text on the first page of the Notice of Allowance and Fee(s) Due (PTOL-85).

United States Patent and Trademark Office

COMMISSIONER FOR PATENTS
UNITED STATES PATENT AND TRADEMARK OFFICE
WASHINGTON, D.C. 20231
www.uspto.gov

Paper No. 8

Audley A. Ciamporcero, Jr.
JOHNSON & JOHNSON
One Johnson & Johnson Plaza
New Brunswick, NJ 08933-7003

AUG 28 2003

In re Application of)
Robert M. Trusty et al.)
Application No. 09/877,275)
Filed: June 8, 2001)
For:APPARATUS AND METHOD OF MONITORING)
AND CONTROLLING POWER OUTPUT OD A)
LASER SYSTEM)

DECISION ON PETITION

This is a decision on the petition under 37 C.F.R. § 1.181, filed August 1, 2003, to withdraw the holding of abandonment of the above-identified application. No fee is required for this petition.

The petition is **DISMISSED**.

This application was held abandoned for failure to timely respond to the non-final Office action of November 6, 2002, of the. A Notice of Abandonment was mailed on June 3, 2003.

Petitioner states that the non-final Office action of November 6, 2002, was not received by counsel and attests to the fact that a check of the file jacket in Johnson & Johnson's Cincinnati office of Ethicon Endo-Surgery indicates that the Office action was not received. The petition further states that an E-mail "to the Johnson & Johnson Patent Department in New Jersey requesting any record of receipt of such an Office Action. The E-mail message and reply (copy attached) indicates that the docket clerks in the Johnson & Johnson New Jersey Patent Department have no record of receiving such an Office Action, and that the response is not of record on the Department docket."

A review of the written record indicates that the Office action was mailed to the correspondence address of record which is Johnson & Johnson Patent Department in New Jersey. A review of the written record indicates no irregularity in the mailing of the Office action, and in the absence of any irregularity there is a strong presumption that the Office action was properly mailed to the correspondence address of record. This presumption may be overcome by a showing that the Office action was not received at the correspondence address of record. The showing required to establish the failure to receive an Office action must include a statement from the practitioner stating that the Office action was not received by the practitioner and attesting to the fact that a

search of the file jacket and docket records indicates that the Office action was not received. A copy of the docket record where the non-received Office action would have been entered had it been received and docketed must be attached to and referenced in practitioner's statement. See "Withdrawing the Holding of Abandonment When Office Actions Are Not Received" 1156 Official Gazette 53 (November 16, 1993) and M.P.E.P. § 711.03(c).

The showing of record establishes only that the petitioner search the file wrapper and did not find the Office action at the petitioner's address in Cincinnati. However, the Office action was not mailed to the petitioner's Cincinnati address. Rather, the Office action was mailed to the correspondence address in New Jersey. As such, it is immaterial that the petitioner has demonstrated that the Office action was not received at his Cincinnati address. The copy of the E-mail inquiry and reply from the docket clerk in petitioner's office in New jersey. Petitioner must establish that the file record at the New Jersey office has been searched and the Office action was not found. Copy of the docket record (s) at the New Jersey office where the Office action would have been logged in had it been received. Copies of communications from a docket clerk from the New Jersey office is inadequate to establish non-receipt of the Office action. Since petitioner has not made the requisite showing, the petition is dismissed.

Any request for reconsideration of this decision should be accompanied by a statement from the practitioner asserting to the fact that Office communications being received by the practitioner at the New Jersey correspondence address of record during the period in which the non-final Office action would have been received. Any request for reconsideration must be submitted within TWO (2) MONTHS from the mailing date of this decision.

Hien H. Phan, Special Programs Examiner
Technology Center 2800 - Semiconductors, Electrical
and Optical Systems and Components
(703) 308-7502

UNITED STATES PATENT AND TRADEMARK OFFICE

Technology Center 1700.

NOV 29 2004

Mailed:_____

rvk

Paper No. _____

In re application of:
Gerald B. Eaton et al
Serial No. 09/877,341
Filed: June 08, 2001
For: DRAG REDUCTION AGENT SLURRIES HAVING ALFOL, ALCOHOLS AND PROCESSES FOR FORMING DRAG REDUCING AGENT SLURRIES USING ALFOL ALCOHOLS

DECISION ON PETITION

This is a response to the REQUEST TO WITHDRAW THE HOLDING OF ABANDONMENT, filed October 27, 2003. The request asks that the abandonment, as set forth in the Notice of Abandonment of October 16, 2003, for failure to timely file a proper response to the Office letter dated January 09, 2003 be withdrawn. The requester asserts that applicants timely filed a proper response on April 03, 2003.

DECISION

The instant request is accepted as a timely petition under 37 C.F.R. 1.181 (no fee).

A review of the petitioner's evidence provided with the instant petition indicates that the request has merit. The evidence presented is sufficient to establish that the applicants did file the proper response to the Office letter of January 09, 2003 in a timely manner. The evidence provided includes: 1) copies of the Response (i.e. an Amendment and a Fifth Supplemental Information Disclosure Statement with a Form 1449A) with an executed Certificate of Mailing on April 03, 2003; and 2) a copy of the returned stamped postcard confirming receipt of the Response by the USPTO dated April 08, 2003.

Therefore, the abandonment is hereby withdrawn, and the application is returned to

pending status. The application will be forwarded to the Technical Support Staff for entering of the Response dated April 03, 2003 and then forwarded to the examiner for prompt consideration.

The Petition is **GRANTED.**

JMStone

Jacqueline Stone, Director
Technology Center 1700
Chemical and Materials Engineering

ANTHONY F. MATHENY
ANDREWS & KURTH L.L.P
600 TRAVIS, SUITE 4200
HOUSTON, TEXAS 77002

UNITED STATES PATENT AND TRADEMARK OFFICE

Commissioner for Patents
United States Patent and Trademark Office
P.O. Box 1450
Alexandria, VA 22313-1450
www.uspto.gov

HONEYWELL/CST
Patent Services
101 Columbia Road
P.O. Box 2245
Morristown, NJ 07962-2245

MAILED

JUN 30 2010

OFFICE OF PETITIONS

Applicant: Darren Duane Cofer	:	DECISION ON REQUEST FOR
Patent Number: Not Yet Available	:	RECALCULATION of PATENT
Issue Date: Not Yet Available	:	TERM ADJUSTMENT IN VIEW OF
Application No. 09/877,362	:	WYETH
Filed: June 8, 2001	:	

The Applicant's Request for Recalculation is **DISMISSED AS PREMATURE**. Applicant has filed the request based upon the USPTO determination that is provided to applicant in the notice of allowance.

The USPTO does not calculate and inform the applicant of the patent term adjustment based upon the three-year pendency provision of 35 U.S.C. § 154(b)(1)(B) or the overlapping provision in 35 USC § 154(b)(2)(A) in the notice of allowance because the USPTO must know the date the patent will issue to be able to calculate the patent term adjustment based upon these provisions. Accordingly, the USPTO does not determine the amount of "B" delay or the amount of overlap as required by Wyeth until the USPTO establishes a grant date.

Thus, reconsideration of the patent term adjustment indicated in the patent as it relates to the three-year pendency provision of 35 U.S.C. § 154(b)(1)(B) and any overlap pursuant to 35 USC § 154(b)(2)(A) are not considered matters that could have been raised in an application for patent term adjustment under 37 CFR 1.705(b)(provides for reconsideration of the patent term adjustment indicated in the notice of allowance). Therefore, a request for reconsideration of the patent term adjustment calculation based on the three-year pendency provision of 35 U.S.C. § 154(b)(1)(B) and the overlapping provision of 35 USC § 154(b)(2)(A) will be considered timely filed if filed within two months of the issue date of the patent.

Applicant may file a reply to this decision dismissing the Request for Recalculation. Applicant must file such reply within one month or thirty days, whichever is longer, of the mail date of the decision dismissing the Request for Recalculation. No fee is required if patentee is asserting in the reply that the dismissal for ineligibility is improper.

Applicant should use document code PET.OP if electronically filing a reply to this dismissal. If the USPTO finds that the request was improperly deemed ineligible, the USPTO will mail applicant a recalculation determination.

Applicant should be aware that in order to preserve the right to review in the United States District Court for the District of Columbia of the USPTO patent term adjustment determination, patentee must ensure that he or she also take the steps required under 35 U.S.C. § 154(b)(4)(A). Nothing in the request for recalculation should be construed as providing an alternative time frame for commencing a civil action under 35 U.S.C. § 154(b)(4)(A).

Any questions concerning this decision should be directed to the Office of Patent Legal Administration at 571-272-7702.

Ramesh Krishnamurthy

Ramesh Krishnamurthy
Petitions Examiner
Office of Petitions

UNITED STATES PATENT AND TRADEMARK OFFICE

Commissioner for Patents
United States Patent and Trademark Office
P.O. Box 1450
Alexandria, VA 22313-1450
www.uspto.gov

COPY MAILED
NOV 2 0 2006
OFFICE OF PETITIONS

PHILIPS INTELLECTUAL PROPERTY
& STANDARDS
P.O. BOX 3001
BRIARCLIFF MANOR, NY 10510

In re Application of

Robert J. Davies

Application No. 09/877,369

Filed: June 8, 2001

Attorney Docket No. GB 000111

DECISION ON PETITION

This is a decision on the petition under 37 CFR 1.181(a) to withdraw the holding of abandonment, filed September 11, 2006.

The petition under 37 CFR 1.181(a) to withdraw the holding of abandonment is **dismissed**.

This application was held abandoned on March 3, 2005, after it was believed that no response was received to the non-final Office action mailed December 2, 2004. The non-final Office action allowed a shortened statutory period for reply of three (3) months from its mailing date. Extensions of the time set for reply were available pursuant to 37 CFR 1.136(a). A Notice of Abandonment was mailed August 11, 2006, indicating that a reply to the non-final Office action was not received.

The instant petition maintains that the response to the non-final Office action was filed on March 4, 2005, and deposited with the United States Postal Service on March 2, 2005. A copy of the response containing a certificate of mailing dated March 2, 2005, accompanied the petition. A N. Menzo signed the certificate of mailing. It is noted that a statement of personal knowledge from N. Menzo regarding the mailing of the response did not accompany the petition, but that a copy of the Office date-stamped postcard from the USPTO whereby the USPTO acknowledged receipt of the amendment on March 4, 2006, accompanied the petition.

Section 711.03 of the *Manual of Patent Examining Procedure* provides, in pertinent part, that

> Where a certificate of mailing under 37 CFR 1.8, but not a postcard receipt, is relied upon in a petition to withdraw the holding of abandonment, see 37 CFR 1.8(b) and MPEP § 512. As stated in 37 CFR 1.8(b)(3) the statement that attests to the previous timely mailing or transmission of the correspondence must be on a personal knowledge basis, or to the satisfaction of the Director of the USPTO. If the statement attesting to the previous timely mailing is not made by the person who signed the Certificate of Mailing (i.e., there is no personal knowledge basis), then the statement attesting to the previous timely mailing should include evidence that supports the conclusion that the correspondence was actually mailed (e.g., copies of a mailing log establishing that correspondence was mailed for that application). When the correspondence

> is shown to have been timely filed based on a certificate of mailing, the correspondence is entered into PALM with the actual date of receipt (i.e., the date that the duplicate copy of the papers was filed with the statement under 37 CFR 1.8).'

The record reflects that the subject certificate under 37 CFR 1.8 was signed by N. Menzo, but that no statement of personal knowledge regarding the timely mailing of the reply accompanied the petition document. It is further noted that the petition document did not explain how Dicran Halajian—who signed the petition document—had firsthand knowledge of the transmission. The Office date-stamped postcard that accompanied the petition is not considered *prima facie* evidence that the amendment was received mailed on March 2, 2005, because the postcard is date-stamped March 4, 2005. Petitioner must properly establish that the amendment was deposited with United States Postal Service first-class mail on March 2, 2005, or rely on the Office-stamped postcard date of March 4, 2005, and establish that an authorization to charge a deposit account of any necessary extension of time was present on March 4, 2005.

Further correspondence with respect to this matter should be addressed as follows:

By mail: Commissioner for Patents
United States Patent and Trademark Office
Box 1450
Alexandria, VA 22313-1450

By facsimile: (571) 273-8300
Attn: Office of Petitions

Telephone inquiries regarding this decision should be directed to the undersigned (571) 272-3222.

Kenya A. McLaughlin
Petitions Attorney
Office of Petitions

UNITED STATES PATENT AND TRADEMARK OFFICE

Commissioner for Patents
United States Patent and Trademark Office
P.O. Box 1450
Alexandria, VA 22313-1450
www.uspto.gov

PHILIPS INTELLECTUAL PROPERTY & STANDARDS
P.O. BOX 3001
BRIARCLIFF MANOR, NY 10510

COPY MAILED
JAN 18 2007
OFFICE OF PETITIONS

In re Application of :
Robert J. Davies :
Application No. 09/877,369 : ON PETITION
Filed: June 8, 2001 :
Attorney Docket No. GB 000111

This is a decision on the renewed petition under 37 CFR 1.181 to withdraw the holding of abandonment filed December 12, 2006.

The renewed petition under 37 CFR 1.181(a) to withdraw the holding of abandonment is **granted**.

This application was held abandoned on March 3, 2005, after it was believed that no response was received to the non-final Office action mailed December 2, 2004. The notice allowed a shortened statutory period for reply of three (3) months from its mailing date. A Notice of Abandonment was mailed on August 11, 2006, indicating that a reply was not received.

The instant renewed petition maintains that a response to the non-final Office action was mailed onMarch 2, 2005. A copy of the response containing a certificate of mailing dated March 2, 2005, and a statement from the person who signed the certificate of mailing accompanied the petition.

Based on the aforementioned, it appears that the application was improperly held abandoned as a proper response was mailed prior to expiration of the period for reply. The holding of abandonment is withdrawn, accordingly. No petition fee is due.

The application file is being forwarded to Technology Center 2600, GAU 2614 further processing, including processing of the copy of the amendment received with the instant petition.

Kenya A. McLaughlin
Petitions Attorney
Office of Petitions

UNITED STATES PATENT AND TRADEMARK OFFICE

Commissioner for Patents
United States Patent and Trademark Office
P.O. Box 1450
Alexandria, VA 22313-1450
www.uspto.gov

FENWICK & WEST LLP
SILICON VALLEY CENTER
801 CALIFORNIA STREET
MOUNTAIN VIEW CA 94041

COPY MAILED

JUL 17 2006

OFFICE OF PETITIONS

In re Application of	:	
Kanchwalla et al.	:	
Application No. 09/877,370	:	DECISION GRANTING PETITION
Filed: June 7, 2001	:	UNDER 37 CFR 1.137(b)
Attorney Docket No. 23402-09411	:	

This is a decision on the petition, filed June 22, 2006, which is being treated as a petition under 37 CFR 1.137(b) to revive the instant non-provisional application for failure to timely notify the U.S. Patent and Trademark (USPTO) of the filing of an application in a foreign country, or under a multinational treaty that requires publication of applications eighteen months after filing. *See* 37 CFR 1.137(f).

The petition is **GRANTED**.

Petitioner states that the instant nonprovisional application is the subject of an application filed in an eighteen-month publication country on June 21, 2001. However, the USPTO was unintentionally not notified of this filing within 45 days subsequent to the filing of the subject application in an eighteen-month publication country.

In view of the above, this application became abandoned pursuant to 35 U.S.C. § 122(b)(2)(B)(iii) and 37 CFR 1.213(c) for failure to timely notify the Office of the filing of an application in a foreign country or under a multilateral international agreement that requires publication of applications 18 months after filing.

A petition to revive an application abandoned pursuant to 35 U.S.C. 122(b)(2)(B)(iii) for failure to notify the USPTO of a foreign filing must be accompanied by:

(1) the required reply which is met by the notification of such filing in a foreign country or under a multinational treaty;
(2) the petition fee as set forth in 37 CFR 1.17(m); and
(3) a statement that the entire delay in filing the required reply from the due date of the reply until the filing of a grantable petition was unintentional.

The instant petition has been found to be in compliance with 37 CFR 1.137(b). Accordingly, the failure to timely notify the USPTO of a foreign or international filing within 45 days after the date of filing of such foreign or international application as provided by 35 U.S.C. § 122(b)(2)(B)(iii) and 37 CFR 1.213(c) is accepted as having been unintentionally delayed.

The previous Request and Certification under 35 U.S.C. § 122(b)(2)(B)(i) has been rescinded. A Notice Regarding Rescission of Nonpublication Request which sets forth the projected publication date of October 26, 2006, accompanies this decision on petition.

This matter is being referred to the Publishing Division for processing into a patent.

Telephone inquiries concerning this decision should be directed to the undersigned at (571) 272-3206.

Liana Chase
Petitions Examiner
Office of Petitions

ATTACHMENT: Notice Regarding Rescission of Nonpublication Request

UNITED STATES PATENT AND TRADEMARK OFFICE

UNITED STATES DEPARTMENT OF COMMERCE
United States Patent and Trademark Office
Address: COMMISSIONER FOR PATENTS
P.O. Box 1450
Alexandria, Virginia 22313-1450
www.uspto.gov

APPLICATION NUMBER	FILING/RECEIPT DATE	FIRST NAMED APPLICANT	ATTY. DOCKET NO.
09/877,370	06/07/2001	Firoz Kanchwalla	INFO-P009

CONFIRMATION NO. 1777

758
FENWICK & WEST LLP
SILICON VALLEY CENTER
801 CALIFORNIA STREET
MOUNTAIN VIEW, CA 94041

Date Mailed: 07/17/2006

Communication Regarding Rescission Of Nonpublication Request and/or Notice of Foreign Filing

Applicant's rescission of the previously-filed nonpublication request and/or notice of foreign filing is acknowledged. The paper has been reflected in the Patent and Trademark Office's (USPTO's) computer records so that the earliest possible projected publication date can be assigned.

The projected publication date is 10/26/2006.

If applicant rescinded the nonpublication request before or on the date of "foreign filing,"[1] then no notice of foreign filing is required.

If applicant foreign filed the application after filing the above application and before filing the rescission, and the rescission did not also include a notice of foreign filing, then a notice of foreign filing (not merely a rescission) is required to be filed within 45 days of the date of foreign filing. See 35 U.S.C. § 122(b)(2)(B)(iii), and Clarification of the United States Patent and Trademark Office's Interpretation of the Provisions of 35 U.S.C. § 122(b)(2)(B)(ii)-(iv), 1272 Off. Gaz. Pat. Office 22 (July 1, 2003).

If a notice of foreign filing is required and is not filed within 45 days of the date of foreign filing, then the application becomes abandoned pursuant to 35 U.S.C. § 122(b)(2)(B)(iii). In this situation, applicant should either file a petition to revive or notify the Office that the application is abandoned. See 37 CFR 1.137(f). Any such petition to revive will be forwarded to the Office of Petitions for a decision. Note that the filing of the petition will not operate to stay any period of reply that may be running against the application.

Questions regarding petitions to revive should be directed to the Office of Petitions at (571) 272-3282. Questions regarding publications of patent applications should be directed to the patent application publication hotline at (703) 605-4283 or by e-mail pgpub@uspto.gov.

[1] Note, for purpose of this notice, that "foreign filing" means "filing an application directed to the same invention in another country, or under a multilateral international agreement, that requires publication of applications 18 months after filing".

UNITED STATES PATENT AND TRADEMARK OFFICE

COMMISSIONER FOR PATENTS
UNITED STATES PATENT AND TRADEMARK OFFICE
WASHINGTON, D.C. 20231
www.uspto.gov

Paper No. 6

Judy Jarecki-Black
AVIGENICS, INC.
425 River Road
Athens, GA 30602-2771

COPY MAILED

JAN 28 2002

OFFICE OF PETITIONS

In re Application of
Jeffrey C. Rapp
Application No. 09/877,374
Filed: June 10, 2001
Attorney Docket No. AVI-007

DECISION DISMISSING PETITION

This is a decision on the request for reconsideration filed January 22, 2002, again requesting that the above-identified application be accorded a filing date of June 8, 2001, rather than the presently accorded filing date of June 10, 2001.

Petitioner again request the earlier filing date on the basis that the application was purportedly deposited in Express Mail service on June 8, 2001. Petitioner acknowledges that the date of deposit in Express Mail shown on petitioner's Express Mail receipt is June 10, 2001, but argues that the application was actually deposited with the United States Postal Service (USPS) on June 8, 2001.

In the petition filed August 14, 2001, petitioner asserted that the filing date was erroneously recorded as evidenced by the Certificate of Express Mail on the Transmittal sheet filed with the original application papers. Petitioner failed to provide the Office with a true copy of the Express Mail Label with the petition.

In the decision of November 16, 2001, the petition was dismissed. The Office noted that petitioner had not provided any direct evidence of the delivery of the above-identified application to the USPS on June 8, 2001. The decision further stated absent a true copy of the "Express Mail" mailing label or other evidence from the USPS or that came into being after deposit and within one business day of the deposit of the correspondence in the "Express Mail" service, which corroborates the allegation that the application was, in fact, deposited with the USPS on June 8, 2001, before the last scheduled pickup for that day, the application would be accorded the date indicated in the Express Mail Database as the date the application was accepted by the USPS (June 10, 2001).

In the present request for reconsideration, Judy C. Jarecki-Black, attorney of record, asserted:

> The above-captioned Application, and associated filing papers, were deposited in the Federal Express Box in the Olympic Street Post Office, Athens, Georgia at 4:42 PM on Friday, 08 June 2001, as indicated on the Certificate of Express Mailing accompanying the filing. The last pick-up for Express Mail at the Olympic Street Post Office is designated on the box as 6PM. All mail, express or

> otherwise, is transferred to Atlanta from Athens for processing. Apparently, Athens personnel failed to time and date stamp the Application mailing before transferring it to the Atlanta AMC for delivery. As a result, the Express Mail label was stamped in Atlanta on Sunday, 10 June 2001 at 3:01AM.

Petition dated 01/22/02, p. 1-2.

In support of the petition, Dr. Jarecki-Black submitted a copy of Express Mail Label EL 846227475 US and a letter to Dr. Jarecki-Black from Athens Postmaster Deborah Phillips.

In the letter of Postmaster Phillips, she indicated:

> Dr. Judy Jarecki-Black states that she placed Express Mail item #EL846227475US in the Express mailbox at the Olympic Drive office on June 8, 2001, but the mail-piece was not scanned accepted until 03:00 a.m. on June 10, 2001 at the Atlanta AMC 30320.
>
> **Based on the statement of Dr. Jarecki-Black of date and time of mailing, it appears** that the mail-piece was dispatched from the Athens post office without being scanned into the system. The mail-piece was then scanned as accepted when found in the mail stream at the Atlanta AMC.

Letter from Deborah J. Phillips, dated 11/29/01 (Emphasis added).

Unfortunately, the letter from the Postmaster fails to corroborate the allegation that the Express Mail package was deposited with the USPS on June 8, 2001. See 37 CFR 1.10(d)(3). It is not evident from the letter of November 29, 2001, whether Postmaster Phillips had firsthand knowledge of the events of June 8, 2001, to establish to the satisfaction of the Commissioner that the requested filing date was the date the correspondence was deposited in the "Express Mail Post Office to Addressee" service prior to the last scheduled pickup for that day. Rather, it appears that Postmaster Phillips' knowledge of the events was based on the statements of Dr. Jarecki-Black.

Accordingly, the petition is **dismissed**.

Any request for reconsideration must be filed within TWO (2) MONTHS of the date of this decision in order to be considered timely. See 37 CFR 1.181(f).

Further correspondence with respect to this matter should be addressed as follows:

By mail: Commissioner for Patents
Box DAC
Washington, D.C. 20231

By FAX: (703) 308-6916
Attn: Office of Petitions

By hand: Crystal Plaza Four, Suite 3C23
2201 South Clark Place
Arlington, VA 22202

This file is being forwarded to Technology Center 1600 for examination in due course with the presently accorded filing date of June 10, 2001.

Telephone inquiries regarding this matter should be directed to the undersigned at (703) 306-5589.

Christina Tartera Donnell

Christina Tartera Donnell
Petitions Attorney
Office of Petitions
Office of the Deputy Commissioner
for Patent Examination Policy

UNITED STATES PATENT AND TRADEMARK OFFICE

COMMISSIONER FOR PATENTS
UNITED STATES PATENT AND TRADEMARK OFFICE
WASHINGTON, D.C. 20231
www.uspto.gov

Paper No. 8

Judy Jarecki-Black
AVIGENICS, INC.
425 River Road
Athens, GA 30602-2771

COPY MAILED

MAR 2 6 2002

OFFICE OF PETITIONS

In re Application of
Jeffrey C. Rapp
Application No. 09/877,374
Filed: June 8, 2001
Attorney Docket No. AVI-007

DECISION GRANTING PETITION

This is a decision on the request for reconsideration filed March 12, 2002, again requesting that the above-identified application be accorded a filing date of June 8, 2001, rather than the presently accorded filing date of June 10, 2001.

Petitioner again requests the earlier filing date on the basis that the application was purportedly deposited in Express Mail service on June 8, 2001. Petitioner acknowledges that the date of deposit in Express Mail shown in the Express Mail database is June 10, 2001, but argues that the application was actually deposited with the United States Postal Service (USPS) on June 8, 2001.

In the petition filed August 14, 2001, petitioner asserted that the filing date was erroneously recorded as evidenced by the Certificate of Express Mail on the Transmittal sheet filed with the original application papers. In the decision of November 16, 2001, the petition was dismissed. The Office noted that petitioner had not provided any direct evidence of the delivery of the above-identified application to the USPS on June 8, 2001. The decision further stated absent a true copy of the "Express Mail" mailing label or other evidence from the USPS or that came into being after deposit and within one business day of the deposit of the correspondence in the "Express Mail" service, which corroborates the allegation that the application was, in fact, deposited with the USPS on June 8, 2001, before the last scheduled pickup for that day, the application would be accorded the date indicated in the Express Mail Database as the date the application was accepted by the USPS (June 10, 2001).

On January 22, 2002, petitioner again request the application be accorded the filing date of June 8, 2001. The attorney of record provided a description of the events surrounding the deposit of the package in Express Mail on June 8, 2001. Additionally, petitioner submitted a letter from the Postmaster to establish that the package was deposited in the Express Mail Service on June 8, 2001. Unfortunately, the letter from the Postmaster failed to corroborate the allegation that the Express Mail package was deposited with the USPS on June 8, 2001. See 37 CFR 1.10(d)(3).

In the present petition, petitioner again requests the earlier filing date on the basis that the application was purportedly deposited in Express Mail service on June 8, 2001, pursuant to the requirements of 37 CFR 1.10. In support, the petition is accompanied by the Declaration of Judy C. Jarecki-Black, attorney of record, and a copy of an Express Mail log book maintained by her. In her Declaration, Ms. Jarecki-Black explained that on June 8, 2001, she deposited an Express Mail package, bearing label No. EL846227475US, in the drop box at the Olympic Street Post Office in Athens, Georgia on June 8, 2001, at 4:42 PM prior to the last scheduled pickup of 6:00 PM. Ms. Jarecki-Black further stated that after depositing the package in the Express Mail service, she entered the time, date of deposit, the Express Mail Number, the docket number, title, and inventor's name in her Express Mail log the next business day as was her customary practice.

A review of the original application papers present in the official file shows that they were received in the United States Patent and Trademark Office (Office) with Express Mail label No. EL846227475US thereon.

In view of the all of the evidence present in the file, it is concluded that the "date-in" shown on the Express Mail label is incorrect and that the correct date of deposit in Express Mail service is June 8, 2001. Accordingly, the application will be accorded a filing date of June 8, 2001.

The petition is granted.

The application is being returned to the Office of Initial Patent Examination for correction of the filing date to June 8, 2001.

Telephone inquires specific to this matter may be directed to the undersigned at (703) 306-5589.

Christina Tartera Donnell

Christina Tartera Donnell
Petitions Attorney
Office of Petitions
Office of the Deputy Commissioner
for Patent Examination Policy

UNITED STATES PATENT AND TRADEMARK OFFICE

COMMISSIONER FOR PATENTS
UNITED STATES PATENT AND TRADEMARK OFFICE
WASHINGTON, D.C. 20231
www.uspto.gov

Paper No. 3

Judy Jarecki-Black
AVIGENICS, INC.
425 River Road
Athens, GA 30602-2771

In re Application of	:	
Jeffrey C. Rapp	:	
Application No. 09/877,374	:	DECISION DISMISSING
Filed: June 10, 2001	:	PETITION
Attorney Docket No. AVI-007	:	

This is a decision on the petition filed August 14, 2001, requesting that the above-identified application be accorded a filing date of June 8, 2001, rather than the presently accorded filing date of June 10, 2001.

Petitioner asserts that the filing date was erroneously recorded as evidenced by the Certificate of Express Mail on the Transmittal sheet filed with the original application papers. It is unclear from the petition if petitioner is alleging that there is a discrepancy between the filing date accorded by the United States Patent and Trademark Office (Office) and the date-in entered by the USPS (37 CFR 1.10(c)) or that the date-in was incorrectly entered by the USPS (37 CFR 1.10(d)). Because petitioner failed to provide the Office with a copy of the Express Mail label No. EL846227475US with the petition, the Office will treat this petition under both 37 CFR 1.10(c) and (d).

Paragraph (a) of 37 CFR 1.10 states that:

> Any correspondence received by the Patent and Trademark Office (Office) that was delivered by the "Express Mail Post Office to Addressee" service of the United States Postal Service (USPS) will be considered filed in the Office on the date of deposit with the USPS. <u>The date of deposit with the USPS is shown by the "date-in" on the "Express Mail" mailing label or other official USPS notation</u>. If the USPS deposit date cannot be determined, the correspondence will be accorded the Office receipt date as the filing date. See §1.6(a) (Emphasis added).

Consideration under 37 CFR 1.10(c)

Paragraph (c) of 37 CFR 1.10 states that:

> Any person filing correspondence under this section that was received by the Office and delivered by the "Express Mail Post Office to Addressee" service of the USPS, who can show a discrepancy between the filing date accorded by the Office to the correspondence and the date

of deposit as shown by the "date-in" on the "Express Mail" mailing label or other official USPS notation, may petition the Commissioner to accord the correspondence a filing date as of the "date-in" on the "Express Mail" mailing label or other official USPS notation, provided that:

(1) The petition is filed promptly after the person becomes aware that the Office has accorded, or will accord, a filing date other than the USPS deposit date;
(2) The number of the "Express Mail" mailing label was placed on the paper(s) or fee(s) that constitute the correspondence prior to the original mailing by "Express Mail;" and
(3) The petition includes a true copy of the "Express Mail" mailing label showing the "date-in," and of any other official notation by the USPS relied upon to show the date of deposit.

The present petition lacks the showing required by item (3) above.

Petitioner did not submit a true copy of the "Express Mail" mailing label No. EL846227475US, showing the "date-in" of June 8, 2001, or any other official notation by the USPS to show the date of deposit.

Consideration under 37 CFR 1.10(d)

Paragraph (d) of 37 CFR 1.10 states that:

Any person filing correspondence under this section that was received by the Office and delivered by the "Express Mail Post Office to Addressee" service of the USPS, who can show that the "date-in" on the "Express Mail" mailing label or other official notation entered by the USPS was incorrectly entered or omitted by the USPS, may petition the Commissioner to accord the correspondence a filing date as of the date the correspondence is shown to have been deposited with the USPS provided that:

(1) The petition is filed promptly after the person becomes aware that the Office has accorded, or will accord, a filing date based upon an incorrect entry by the USPS;
(2) The number of the "Express Mail" mailing label was placed on the paper(s) and fee(s) that constitute the correspondence prior to the original mailing by "Express Mail;" and
(3) The petition includes a showing, which establishes, to the satisfaction of the Commissioner, that the requested filing date was the date the correspondence was deposited in "Express Mail Post Office to Addressee" service prior to the last scheduled pickup for that day. Any showing pursuant to this paragraph must be corroborated by evidence from the USPS or that

> came into being after deposit and within one business day of the deposit of the correspondence in the "Express Mail Post Office to Addressee" service of the USPS.

The present petition lacks the showing required by item (3) above.

A grantable petition under 37 CFR 1.10(d) must include "a showing which establishes, to the satisfaction of the Commissioner, that the requested filing date was the date the correspondence was deposited in 'Express Mail Post Office to Addressee' service prior to the last scheduled pickup for that day." In addition, the showing "must be corroborated by evidence from the USPS or that came into being after deposit and within one business day of the deposit of the correspondence in the 'Express Mail Post Office to Addressee' service of the USPS." Evidence from the USPS may be, for example, the Express Mail Corporate Account Mailing Statement or a statement by an appropriate official of the USPS that according to a USPS record the "date-in" on petitioner's Express Mail receipt is erroneous, accompanied by a copy of the relevant USPS record. Evidence that came into being within one day after the deposit of the correspondence as Express Mail may be, for example, a log book which contains information such as the Express Mail label number; the application number, attorney docket number or other such file identification number; the place, date and time of deposit; the time of the last scheduled pick-up for that date and place of deposit; the depositor's initials or signature; and the date and time of the log book entry.

As previously stated, petitioner did not supply a copy of the Express Mail label No. EL846227475US. Moreover, the USPTO's USPS Express Mail Information Database indicates that a package bearing Express Mail label No. EL846227475US was accepted by the USPS on June 10, 2001 at 3:00 AM. The Office notes that petitioner bears the burden to prove that the "date-in" was incorrectly entered on the "Express Mail" mailing label. Petitioner has not provided any direct evidence of the delivery of the present application to the USPS on June 8, 2001. Absent a true copy of the "Express Mail" mailing label or other evidence from the USPS or that came into being after deposit and within one business day of the deposit of the correspondence in the "Express Mail" service, which corroborates the allegation that the application was, in fact, deposited with the USPS on June 8, 2001, before the last scheduled pick-up for that day, the application will be accorded the date indicated in the Express Mail Database as the date the application was accepted by the USPS (June 10, 2001).

Accordingly, the petition is **dismissed**.

Any request for reconsideration must be filed within TWO (2) MONTHS of the date of this decision in order to be considered timely. See 37 CFR 1.181(f).

Further correspondence with respect to this matter should be addressed as follows:

By mail: Commissioner for Patents
Box DAC
Washington, D.C. 20231

By FAX: (703) 308-6916
Attn: Office of Petitions

By hand: Crystal Plaza Four, Suite 3C23
2201 South Clark Place
Arlington, VA 22202

This file is being forwarded to Technology Center 1600 for examination in due course with the presently accorded filing date of June 10, 2001.

Telephone inquiries regarding this matter should be directed to the undersigned at (703) 306-5589.

Christina Tartera Donnell

Christina Tartera Donnell
Petitions Attorney
Office of Petitions
Office of the Deputy Commissioner
for Patent Examination Policy

Enclosure: USPTO's USPS Express Mail Information Database

UNITED STATES PATENT AND TRADEMARK OFFICE

Commissioner for Patents
United States Patent and Trademark Office
P.O. Box 1450
Alexandria, VA 22313-1450
www.uspto.gov

Paper No. 22

David D. Stein
Suite 1030
250 E. Wisconsin Avenue
Milwaukee, WI 53202

COPY MAILED
MAY 27 2004
OFFICE OF PETITIONS

In re Application of

Michael Holmstrom

Application No. 09/877,394

Filed: June 7, 2001

Attorney Docket No. 230.008

DECISION ON PETITION

This is a decision on the petition under 37 CFR 1.137(b), filed May 17, 2004, to revive the above-identified application.

The petition is **GRANTED**.

The above-cited application became abandoned for failure to reply in a timely manner to the final Office action mailed May 13, 2003, which set a shortened statutory period for reply of three (3) months. A response was filed on November 13, 2003, along with a request for an extension of time within the third month. An Advisory Action mailed November 25, 2003, advised that the response of November 13, 2003, failed to place the application in condition for allowance. No further proper responses were received within the allowable period and the application became abandoned on November 14, 2003.

The Request for Continued Examination and amendment filed May 17, 2004, are noted and made of record.

The request for an extension of time is noted, but was not charged. An extension of time for reply is not available or necessary for an application that is abandoned.

The application is being forwarded to Technology Center 3700 for further processing.

Telephone inquiries concerning this decision should be directed to the undersigned at (703) 305-0010.

Kenya A. McLaughlin
Petitions Attorney
Office of Petitions

UNITED STATES PATENT AND TRADEMARK OFFICE

COMMISSIONER FOR PATENTS
UNITED STATES PATENT AND TRADEMARK OFFICE
P.O. BOX 1450
ALEXANDRIA, VA 22313-1450
www.uspto.gov

FISH & RICHARDSON PC
PO BOX 1022
MINNEAPOLIS MN 55440-1022

COPY MAILED

FEB 05 2007

OFFICE OF PETITIONS

In re Application of	:
Ford, et al.	:
Application No. 09/877,404	: DECISION ON PETITION
Filed: June 8, 2001	: UNDER 37 CFR 1.78(a)(3)
Attorney Docket No. 00786-157003	:

This is a decision on the petition under 37 CFR 1.78(a)(3), filed June 21, 2006, to accept an unintentionally delayed claim under 35 U.S.C. § 120 for the benefit of priority to the prior-filed nonprovisional applications set forth in the amendment filed with the petition.

The petition is **DISMISSED**.

A petition for acceptance of a claim for late priority under 37 CFR 1.78(a)(3) is only applicable to those applications filed on or after November 29, 2000. Further, the petition is appropriate only after the expiration of the period specified in 37 CFR 1.78(a)(2)(ii). In addition, the petition under 37 CFR 1.78(a)(3) must be accompanied by:

(1) the reference required by 35 U.S.C. § 120 and 37 CFR 1.78(a)(2)(i) of the prior-filed application, unless previously submitted;
(2) the surcharge set forth in § 1.17(t); and
(3) a statement that the entire delay between the date the claim was due under 37 CFR 1.78(a)(2)(ii) and the date the claim was filed was unintentional. The Director may require additional information where there is a question whether the delay was unintentional.

The petition does not satisfy item (1) above.

The reference to add the above-noted, prior-filed applications on page one following the first sentence of the specification is not acceptable as drafted since it improperly incorporates by reference the prior-filed applications. An incorporation by reference statement added after an application's filing date is not effective because no new

matter can be added to an application after its filing date (*see* 35 U.S.C. § 132(a)). If an incorporation by reference statement is included in an amendment to the specification to add a benefit claim under 35 U.S.C. § 120 after the filing date of the application, the amendment would not be proper. When a benefit claim under 35 U.S.C. § 120 is submitted after the filing of an application, the reference to the prior application cannot include an incorporation by reference statement of the prior application. *See* Dart Industries v. Banner, 636 F.2d 684, 207 USPQ 273 (C.A.D.C. 1980). *Note* MPEP §§ 201.06(c) and 608.04(b).

Moreover, the amendment must refer to the full application number, not just the last six numerals (serial number).

Before the petition under 37 CFR § 1.78(a)(3) can be granted, a renewed petition and either an Application Data Sheet or an amendment (complying with the provisions of 37 CFR 1.121 and 37 CFR 1.76(b)(5)) to correct the above matters are required.

Further correspondence with respect to this matter should be addressed as follows:

By mail: Mail Stop PETITIONS
Commissioner for Patents
Post Office Box 1450
Alexandria, VA 22313-1450

By hand: Customer Service Window
Mail Stop Petitions
Randolph Building
401 Dulany Street
Alexandria, VA 22314

By fax: (571) 273-8300
ATTN: Office of Petitions

Any questions concerning this matter may be directed to Petitions Attorney Cliff Congo at (571) 272-3207.

Charles Steven Brantley
Senior Petitions Attorney
Office of Petitions

UNITED STATES PATENT AND TRADEMARK OFFICE

COMMISSIONER FOR PATENTS
UNITED STATES PATENT AND TRADEMARK OFFICE
P.O. BOX 1450
ALEXANDRIA, VA 22313-1450
www.uspto.gov

FISH & RICHARDSON PC
PO BOX 1022
MINNEAPOLIS MN 55440-1022

COPY MAILED

MAR 3 1 2008

OFFICE OF PETITIONS

In re Application of	:
Ford, et al.	:
Application No. 09/877,404	: DECISION ON PETITION
Filed: June 8, 2001	: UNDER 37 CFR 1.78(a)(3)
Attorney Docket No. 00786-157003	:

This is a decision on the renewed petition under 37 CFR 1.78(a)(3), filed February 23, 2007, to accept an unintentionally delayed claim under 35 U.S.C. § 120 for the benefit of priority to the prior-filed nonprovisional applications set forth in the amendment filed with the petition.

The petition is **GRANTED**.

A petition for acceptance of a claim for late priority under 37 CFR 1.78(a)(3) is only applicable to those applications filed on or after November 29, 2000. Further, the petition is appropriate only after the expiration of the period specified in 37 CFR 1.78(a)(2)(ii). In addition, the petition under 37 CFR 1.78(a)(3) must be accompanied by:

(1) the reference required by 35 U.S.C. § 120 and 37 CFR 1.78(a)(2)(i) of the prior-filed application, unless previously submitted;
(2) the surcharge set forth in § 1.17(t); and
(3) a statement that the entire delay between the date the claim was due under 37 CFR 1.78(a)(2)(ii) and the date the claim was filed was unintentional. The Director may require additional information where there is a question whether the delay was unintentional.

All of the above requirements having been satisfied, the late claim for priority under 35 U.S.C. § 120 is accepted as being unintentionally delayed.

The granting of the petition to accept the delayed benefit claim to the prior-filed applications under 37 CFR 1.78(a)(3) should not be construed as meaning that this application is entitled to the benefit of the prior-filed application. In order for this application to be entitled to the benefit of the prior-filed application, all other requirements under 35 U.S.C. § 120 and 37 CFR 1.78(a)(1) and (a)(2) must be met. Similarly, the fact that the corrected Filing Receipt accompanying this decision on petition includes the prior-filed application should not be construed as meaning that applicant is entitled to the claim for benefit of priority to the prior-filed application noted thereon. Accordingly, the examiner will, in due course, consider this benefit claim and determine whether the application is entitled to the benefit of the earlier filing date.

A corrected Filing Receipt, which includes the priority claim to the prior-filed applications, accompanies this decision on petition.

Any inquiries concerning this decision may be directed to Petitions Attorney Cliff Congo at (571) 272-3207. All other inquiries concerning either the examination procedures or status of the application should be directed to the Technology Center.

This application is being forwarded to Technology Center Art Unit 2121 for consideration by the examiner of applicant's entitlement to claim benefit of priority under 35 U.S.C. § 120 to the prior-filed applications.

Anthony Knight
Supervisor
Office of Petitions

UNITED STATES PATENT AND TRADEMARK OFFICE

Commissioner for Patents
United States Patent and Trademark Office
P. O. Box 1450
Alexandria, VA 22313-1450
www.uspto.gov

Paper No. 16

Kristin C. Castle
Sierra Patent Group
P.O. Box 6149
Stateline, NV 89449

COPY MAILED

JUL 01 2003

OFFICE OF PETITIONS

In re Application of	:	
Bruce M. RUANA	:	
Application No. 09/877,409	:	DECISION GRANTING PETITION
Filed: June 7, 2001	:	UNDER 37 CFR 1.137(b)
Attorney Docket No. RUANA-002	:	

This is a decision on the petition, filed May 12, 2003 under 37 CFR 1.137(f), which is being treated as a petition under 37 CFR 1.137(b),to revive the instant nonprovisional application.

The petition is **GRANTED**.

Petitioner states that the instant nonprovisional application is the subject of an application filed in a foreign country on June 5, 2002. However, the U.S. Patent and Trademark Office was unintentionally not notified of this filing within 45 days subsequent to the filing of the subject application in a foreign country.

In view of the above, this application became abandoned pursuant to 35 U.S.C. § 122(b)(2)(B)(iii) and 37 CFR 1.213(c) for failure to timely notify the Office of the filing of an application in a foreign country, or under a multilateral international agreement, that requires publication of applications 18 months after filing.

A petition under 37 CFR 1.137(b) must be accompanied by:

(1) the reply which is met by the notification of such filing in a foreign country or under a multinational treaty;

(2) the petition fee as set forth in 37 CFR 1.17(m); and

(3) a statement that the entire delay in filing the required reply from the due date of the reply until

the filing of a grantable petition was unintentional.

The instant petition has been found to be in compliance with 37 CFR 1.137(b). Accordingly, the failure to timely notify the Office of a foreign or international filing within 45 days after the date of filing of such foreign or international application as provided by 35 U.S.C. § 122(b)(2)(B)(iii) and 37 CFR 1.213(c) is accepted as having been unintentionally delayed.

The previous Request and Certification under 35 U.S.C. § 122(b)(2)(B)(I) has been rescinded. A Notice Regarding Rescission of Nonpublication Request which sets forth the projected publication date of October 2, 2003 was previously mailed in the instant application.

Petitioner is reminded that the statutory period for filing a proper reply to the final Office action, mailed January 31, 2003, continues to run from the mail date of that action.

Any inquiries concerning this decision may be directed to the undersigned at (703) 308-3865.

This application is being forwarded to Technology Center Art Unit 3612 for appropriate action on the amendment after final rejection filed June 2, 2003.

BethAnne Dayoan
Petitions Examiner
Office of Petitions
Office of the Deputy Commissioner
for Patent Examination Policy

UNITED STATES PATENT AND TRADEMARK OFFICE

COMMISSIONER FOR PATENTS
UNITED STATES PATENT AND TRADEMARK OFFICE
P.O. BOX 1450
ALEXANDRIA, VA 22313-1450
www.uspto.gov

Paper No. 29

Kristin C. Castle
Sierra Patent Group
PO Box 6149
Stateline, NV 89449

COPY MAILED

OCT 2 9 2003

OFFICE OF PETITIONS

In re Application of :
Bruce M. Ruana :
Application No. 09/877,409 : ON PETITION
Filed: June 7, 2001 :
Attorney Docket No. RUANA-002 :

This is a decision on the petition under 37 CFR 1.137(b) filed September 24, 2003, to revive the above-identified application.

The petition is granted.

The above-identified application became abandoned for failure to reply within the meaning of 37 CFR 1.113 in a timely manner in reply to the final Office action mailed January 31, 2003, which set a shortened statutory period for reply of three months from the mail date of the Notice. A two (2) month extension of time was filed on September 10, 2003. Accordingly, the application became abandoned on May 1, 2003.

37 CFR 1.137(b)(3) requires a statement that the entire delay in filing the required reply from the due date for the reply until the filing of a grantable petition pursuant to 37 CFR 1.137(b) was unintentional. Since the statement contained in the instant petition varies from the language required by 37 CFR 1.137(b)(3), the statement is being construed as the statement required by 37 CFR 1.137(b)(3) and petitioner must notify the Office if this is **not** a correct interpretation of the statement.

The application file is being forwarded to Technology Center AU 3612 for processing the Request for Continued Examination pursuant to 37 CFR 1.114 filed with the instant petition.

Telephone inquiries regarding this decision should be directed to Latrice Bond at (703) 308-6911.

Latrice Bond

Latrice Bond
Paralegal Specialist
Office of Petitions
Office of the Deputy Commissioner
for Patent Examination Policy

UNITED STATES PATENT AND TRADEMARK OFFICE

COMMISSIONER FOR PATENTS
UNITED STATES PATENT AND TRADEMARK OFFICE
WASHINGTON, DC 20231
www.uspto.gov

Paper No. 6

STEVEN P. WIGMORE
KING & SPALDING
45TH FLOOR
191 PEACHTREE STREET, N.E.
ATLANTA, GEORGIA 30303

MAIL

OCT 1 0 2002

DIRECTOR OFFICE
TECHNOLOGY CENTER 2600

In re Application of :
Ewell LuJack, et al. :
Application No. 09/877,410 :
Filed: October 26, 2001 :
For: METHOD AND SYSTEM FOR EXPANDING SERVICES I N A DIGITAL LOOP CARRIER SYSTEM :

DECISION ON REQUEST TO WITHDRAW AS ATTORNEY

This is a decision on the request to withdraw as attorney/agent of record filed on June 8, 2001.

A grantable request to withdraw as attorney of record should indicate thereon the present mailing addresses of the attorney(s) who is/are withdrawing from the record and of the applicant. The request for withdrawal must be signed by every attorney seeking to withdraw or contain a clear indication that one attorney is signing on behalf of another/others. A request to withdraw will not be approved unless at least 30 (thirty) days would remain between the date of approval and the later of the expiration date of a time to file a response or the expiration date of the maximum time period which can be extended under 37 C.F.R. § 1.136(a). The effective date of withdrawal being the date of decision and not the date of request. See M.P.E.P. § 402.06. 37 C.F.R. § 1.36 further requires that the applicant or patent owner be notified of the withdrawal of the attorney or agent.

The request is **GRANTED.**

Josephine Young is granted the request for withdraw of attorney/agent.
All future communications from the Office will continue to be directed to the address listed above until otherwise notified by applicant. Applicant is reminded of the obligation to promptly notify the Patent and Trademark Office of any change in correspondence address to ensure receipt of all communications from the Office.

Kenneth A. Wieder

Kenneth Wieder
Special Program Examiner
Technology Center 2600
Communications
(703) 305-4710

UNITED STATES PATENT AND TRADEMARK OFFICE

Commissioner for Patents
Unit d States Patent and Trademark Office
P. O. Box 1450
Alexandria, VA 22313-1450
www.uspto.gov

Paper No. 10

Kenneth D'Alessandro
Sierra Patent Group, Ltd.
P.O. Box 6149
Stateline, NV 89449

COPY MAILED

MAY 2 2 2003

OFFICE OF PETITIONS

In re Application of	:	
Geoffrey FOOTE et al.	:	
Application No. 09/877,411	:	DECISION GRANTING PETITION
Filed: June 7, 2001	:	UNDER 37 CFR 1.137(f)
Attorney Docket No. SYN-099	:	

This is a decision on the petition, filed May 12, 2003, to revive the instant nonprovisional application under the unintentional provisions of 37 CFR 1.137(f).

The petition is **GRANTED**.

Petitioner states that the instant nonprovisional application is the subject of an application filed in a foreign country on May 31, 2002. However, the U.S. Patent and Trademark Office was unintentionally not notified of this filing within 45 days subsequent to the filing of the subject application in a foreign country.

In view of the above, this application became abandoned pursuant to 35 U.S.C. § 122(b)(2)(B)(iii) and 37 CFR 1.213(c) for failure to timely notify the Office of the filing of an application in a foreign country, or under a multilateral international agreement, that requires publication of applications 18 months after filing.

A petition under 37 CFR 1.137(f) must be accompanied by:

(1) the reply which is met by the notification of such filing in a foreign country or under a multinational treaty;

(2) the petition fee as set forth in 37 CFR 1.17(m); and

(3) a statement that the entire delay in filing the required reply from the due date of the reply until

the filing of a grantable petition was unintentional.

The instant petition has been found to be in compliance with 37 CFR 1.137(f). Accordingly, the failure to timely notify the Office of a foreign or international filing within 45 days after the date of filing of such foreign or international application as provided by 35 U.S.C. § 122(b)(2)(B)(iii) and 37 CFR 1.213(c) is accepted as having been unintentionally delayed.

The previous Request and Certification under 35 U.S.C. § 122(b)(2)(B)(i) has been rescinded. A Notice Regarding Rescission of Nonpublication Request which sets forth the projected publication date of August 28, 2003 has been mailed in the instant application.

Any inquiries concerning this decision may be directed to B. Dayoan at (703) 308-3865 or, in her absence, to the undersigned at (703) 305-8680.

This application is being forwarded to Technology Center Art Unit 2173 for examination in due course.

Frances Hicks

Frances Hicks
Petitions Examiner
Office of Petitions
Office of the Deputy Commissioner
for Patent Examination Policy

UNITED STATES PATENT AND TRADEMARK OFFICE

Commissioner for Patents
United States Patent and Trademark Office
P.O. Box 1450
Alexandria, VA 22313-1450
www.uspto.gov

TESTA, HURWITZ & THIBEAULT, LLP
HIGH STREET TOWER
125 HIGH STREET
BOSTON, MA 02110

COPY MAILED

DEC 0 2 2004

OFFICE OF PETITIONS

In re Application of	:	
David E. Tewksbary	:	
Application No. 09/877,416	:	ON PETITION
Filed: June 8, 2001	:	
Attorney Docket No. ADR-006	:	

This is a decision on the petition filed October 7, 2004 to correct assignment data on Form PTOL-85(b).

The petition is granted.

The application is being forwarded to the Publishing Division.

Telephone inquiries concerning this matter may be directed to the undersigned at (571)272-3228.

Edward J. Tannouse
Petitions Attorney
Office of Petitions
United States Patent and Trademark Office

UNITED STATES PATENT AND TRADEMARK OFFICE

COMMISSIONER FOR PATENTS
UNITED STATES PATENT AND TRADEMARK OFFICE
P.O. BOX 1450
ALEXANDRIA, VA 22313-1450
www.uspto.gov

Paper No. 6

MARK K. JOHNSON
MIRUS CORPORATION
505 S. ROSE ROAD
MADISON, WI 53719

COPY MAILED

JAN 07 2004

OFFICE OF PETITIONS

In re Application of
Monaham et al.
Application No. 09/877,436
Filed: June 7, 2001
Attorney Docket No. Mirus.013.01.01

ON PETITION

This is a decision on the petition under 37 CFR 1.137(b), filed December 12, 2003, to revive the above-identified application.

The petition is **DISMISSED**.

Any request for reconsideration must be submitted within TWO (2) MONTHS from the mail date of this decision. No further petition fee is required for the request. Extensions of time under 37 CFR 1.136(a) are permitted. The reconsideration request should include a cover letter entitled "Renewed Petition under 37 CFR 1.137(b)." This is **not** a final agency action within the meaning of 5 U.S.C. § 704.

The above-identified application became abandoned for failure to reply in a timely manner to the Notice to File Missing Parts of Application (Notice) mailed June 26, 2001. The Notice set a period for reply of two (2) months from the mail date of the Notice. No extensions of time under the provisions of 37 CFR 1.136(a) were obtained. Accordingly, the above-identified application became abandoned on August 27, 2001. A Notice of Abandonment was mailed on November 7, 2003.

A grantable petition under 37 CFR 1.137(b) must be accompanied by:
(1) the required reply,[1]
(2) the petition fee,
(3) a statement that the entire delay in filing the required reply from the due date for the reply until the filing of a grantable petition pursuant to 37 CFR 1.137(b) was unintentional, and
(4) a terminal disclaimer and fee if the application was filed on or before June 8, 1995 or if the application is a design application.

Where there is a question as to whether either the abandonment or the delay in filing a petition under 37 CFR 1.137 was unintentional, the Commissioner may require additional information.[2]

---

[1] In a nonprovisional application abandoned for failure to prosecute, the required reply may be met by the filing of a continuing application. In an application or patent, abandoned or lapsed for failure to pay the issue fee or any portion thereof, the required reply must be the payment of the issue fee or any outstanding balance thereof.

[2] See MPEP 711.03(c)(III)(C) and (D).

The instant petition lacks item (1). Petitioner failed to submit payment of the $65.00 late oath or declaration fee. Petitioner must supply the fee in order to revive the above-identified application.

Petitioner contends that a copy of a declaration from the parent application was previously submitted, as shown on the Utility Patent Application Transmittal. A review of the application shows that a declaration was indeed submitted with the original papers on June 7, 2001. However, the declaration was not signed. Therefore, the petition fee will not be refunded.

Further correspondence with respect to this matter should be addressed as follows:

By mail: Mail Stop PETITION
Commissioner for Patents
Post Office Box 1450
Alexandria, VA 22313-1450

Effective December 1, 2003, the Office of Petitions can no longer receive hand-carried correspondence, or facsimile transmissions of correspondence. The centralized location for hand-carried correspondence is the existing Customer Window located at:

2011 South Clark Place
Crystal Plaza 1 Lobby
Room 1B03
Arlington, VA 22202

The centralized facsimile number is **(703) 872-9306.**

Telephone inquiries should be directed to Paralegal Liana Chase at (703) 306-0482.

Sherry Brinkley for

Karen Creasy
Petitions Examiner
Office of Petitions
Office of the Deputy Commissioner
for Patent Examination Policy

UNITED STATES PATENT AND TRADEMARK OFFICE

COMMISSIONER FOR PATENTS
UNITED STATES PATENT AND TRADEMARK OFFICE
P.O. BOX 1450
ALEXANDRIA, VA 22313-1450
www.uspto.gov

Paper No. 8

MARK K. JOHNSON
MIRUS CORPORATION
505 S. ROSE ROAD
MADISON, WI 53719

COPY MAILED

FEB 0 5 2004

OFFICE OF PETITIONS

In re Application of Monaham et al. Application No. 09/877,436 Filed: June 7, 2001 Attorney Docket No. Mirus.013.01.01	ON PETITION

This is a decision on the renewed petition under 37 C.F.R. § 1.137(b), filed January 15, 2004, to revive the above-identified application.

The petition is **granted.**

The above-identified application became abandoned for failure to reply in a timely manner to the Notice to File Missing Parts of Application (Notice) mailed June 26, 2001. The Notice set a period for reply of two (2) months from the mail date of the Notice. No extensions of time under the provisions of 37 CFR 1.136(a) were obtained. Accordingly, the above-identified application became abandoned on August 27, 2001. A Notice of Abandonment was mailed on November 7, 2003.

Petitioner has met the requirements to revive the above-identified application pursuant to 37 CFR 1.137(b).

The file is now being forwarded to the Office of Initial Patent Examination for further processing.

Telephone inquiries should be directed to Paralegal Liana Chase at (703) 306-0482.

Karen Creasy

Karen Creasy
Petitions Examiner
Office of Petitions
Office of the Deputy Commissioner
for Patent Examination Policy

UNITED STATES PATENT AND TRADEMARK OFFICE

COMMISSIONER FOR PATENTS
UNITED STATES PATENT AND TRADEMARK OFFICE
WASHINGTON, DC 20231
www.uspto.gov

MAIL Paper No. 6

SAWYER LAW GROUP LLP
P.O. Box 51418
Palo Alto CA 94303

JAN 14 2003

DIRECTOR OFFICE
TECHNOLOGY CENTER 2600

In re Application of :
Jonah M. Alben et al :
Application No. 09/877,462 :
Filed: June 7, 2001 :
For: **GRAPHICS SYSTEM INCLUDING A PLURALITY OF HEADS** :

DECISION ON REQUEST TO WITHDRAW AS ATTORNEY

This is a decision on the request to withdraw as attorney/agent of record filed on November 18, 2002.

A grantable request to withdraw as attorney/agent of record must:
(1) indicate the present mailing address of the attorney(s)/agent(s) who seek(s) to withdraw, and
(2) be signed by each attorney/agent seeking to withdraw or clearly be signed on their behalf, and
(3) be *approved* at least thirty (30) days prior to the maximum extendable period for response to any outstanding Office Action, and
(4) indicate the address to which future correspondence should be mailed.

Petitioner has met all of the above. Accordingly, the request is **GRANTED**.

Joseph A. Sawyer is removed from record. Janyce R. Mitchell, Joyce A. Tom, Stephen G. Sullivan and Michele Liu remain active.

All future communications from the Office will be directed to the address listed below until otherwise notified by applicant. Applicant is reminded of the obligation to promptly notify the Patent and Trademark Office of any change in correspondence address to ensure receipt of all communications from the Office.

Krista Zele
Special Program Examiner
Technology Center 2600
Communications
(703) 305-4701

cc: NVIDIA Corporation
2701 San Tomas Expressway
Santa Clara, CA 95050

UNITED STATES PATENT AND TRADEMARK OFFICE

Commissioner for Patents
United States Patent and Trademark Office
P.O. Box 1450
Alexandria, VA 22313-1450
www.uspto.gov

Law Offices of Ronald M. Anderson
600 108th Ave, NE
Suite 507
Bellevue, WA 98004

MAILED

APR 0 6 2005

Technology Center 2100

In re Application of:
Mitchell LONDON, et al.
Application No. 09/877,471
Filed: June 8, 2001
For: INCREASING WEBPAGE BROWSING EFFICIENCY BY PERIODICALLY PHYSICALLY DISTRIBUTING MEMORY MEDIA ON WHICH WEB PAGE DATA ARE CACHED

DECISION ON REQUEST TO WITHDRAW AS ATTORNEY OR AGENT

This is a decision on the Request to Withdraw from Representation filed November 11, 2004.

A grantable request to withdraw as attorney of record should indicate thereon the present mailing addresses of the attorney(s) who is/are withdrawing from the record and of the applicant. The request for withdrawal must be signed by every attorney seeking to withdraw or contain a clear indication that one attorney is signing on behalf of another/others. A request to withdraw will not be approved unless at least 30 (thirty) days would remain between the date of approval and the later of the expiration date of a time to file a response or the expiration date of the maximum time period which can be extended under 37 C.F.R. § 1.136(a). The effective date of withdrawal being the date of decision and not the date of request. See M.P.E.P. § 402.06. 37 C.F.R. § 1.36 further requires that the applicant or patent owner be notified of the withdrawal of the attorney or agent.

A review of the file reveals that a non-final Office Action was mailed on November 5, 2004. Therefore, the time for response, including the maximum extendable period, to the Office action mailed November 5, 2004, continues to run until May 5, 2005. Thus, as of the mailing of this decision, less than thirty days remain in the period for response to the Office action.

Accordingly, the request is **DENIED**. Further communications will continue to be addressed to the address above.

For Vincent N. Trans
Special Program Examiner
Technology Center 2100
Computer Architecture, Software, and
Information Security
571-272-3613

UNITED STATES PATENT AND TRADEMARK OFFICE

Commissioner for Patents
United States Patent and Trademark Office
P.O. Box 1450
Alexandria, VA 22313-1450
www.uspto.gov

Law Offices of RONALD M. ANDERSON
600 – 108th Avenue, N.E., Suite 507
Bellevue, WA 98004

MAILED

JUN 25 2005

Technology Center 2100

In re Application of:
Mitchell LONDON, et al.
Application No. 09/877,471
Filed: June 8, 2001
For: INCREASING WEBPAGE BROWSING EFFICIENTLY BY PERIODICALLY PHYSICALLY DISTRIBUTING MEMORY MEDIA ON WHICH WEB PAGE DATA ARE CACHED

DECISION ON REQUEST TO WITHDRAW AS ATTORNEY OR AGENT

This is a decision on the Request to Withdraw from Representation filed May 26, 2005.

A grantable request to withdraw as attorney of record should indicate thereon the present mailing addresses of the attorney(s) who is/are withdrawing from the record and of the applicant. The request for withdrawal must be signed by every attorney seeking to withdraw or contain a clear indication that one attorney is signing on behalf of another/others. A request to withdraw will not be approved unless at least 30 (thirty) days would remain between the date of approval and the later of the expiration date of a time to file a response or the expiration date of the maximum time period which can be extended under 37 C.F.R. § 1.136(a). The effective date of withdrawal being the date of decision and not the date of request. See M.P.E.P. § 402.06. 37 C.F.R. § 1.36 further requires that the applicant or patent owner be notified of the withdrawal of the attorney or agent.

A review of the file reveals that a non-final Office Action was mailed on November 5, 2004. Therefore, the time for response, including the maximum extendable period, to the Office action mailed on November 5, 2004 expired May 5, 2005. Accordingly, the request is **DENIED.**

Further communications will continue to be addressed to the address above.

Vincent N. Trans
For Special Program Examiner
Technology Center 2100
Computer Architecture, Software, and
Information Security
571-272-3613

UNITED STATES PATENT AND TRADEMARK OFFICE

Commissioner for Patents
United States Patent and Trademark Office
P.O. Box 1450
Alexandria, VA 22313-1450
www.uspto.gov

NOVO NORDISK, INC.
PATENT DEPARTMENT
100 COLLEGE ROAD WEST
PRINCETON, NJ 08540

COPY MAILED

JUL 0 7 2005

OFFICE OF PETITIONS

In re Application of :
Henrik Aspe, et al. :
Application No. 09/877,492 :
Filed: June 8, 2001 :
Attorney Docket No. 6303.000-US :

ON PETITION

This is a decision on the petition under 37 CFR 1.137(b), filed October 4, 2004, to revive the above-identified application.

The petition is **GRANTED.**

The above-identified application became abandoned for failure to submit the issue fee in a timely manner in reply to the Notice of Allowance mailed May 5, 2004, which set a statutory period for reply of three (3) months. Accordingly, the above-identified application became abandoned on August 6, 2004.

The Revocation of Power of Attorney and Change of Correspondence Address has been accepted and recorded.

The petition satisfies the conditions for revival pursuant to the provisions of 37 CFR 1.137(b) in that (1) the reply in the form of payment of the issue fee; (2) the petition and publication fees; and (3) the required statement of unintentional delay have been received. Accordingly, the issue fee is accepted as having been unintentionally delayed.

Telephone inquiries concerning this decision should be directed to the undersigned at (571) 272-3229.

This application matter is being forwarded to the Publishing Division for further processing.

Retta Williams

Retta Williams
Petitions Examiner
Office of Petitions
Office of the Deputy Commissioner
for Patent Examination Policy

UNITED STATES PATENT AND TRADEMARK OFFICE

COMMISSIONER FOR PATENTS
UNITED STATES PATENT AND TRADEMARK OFFICE
P.O. BOX 1450
ALEXANDRIA, VA 22313-1450
www.uspto.gov

HANSRA PATENT SERVICES
4525 GLEN MEADOWS PLACE
BELLINGHAM, WA 98226

COPY MAILED
OCT 3 1 2005
OFFICE OF PETITIONS

In re Application of :
McGinnis et al. :
Application No. 09/877,525 :
Filed: June 8, 2001 :
For: METHOD AND APPARATUS FOR :
INCREASING THE DEVICE COUNT :
ON A SINGLE ATA BUS :

This is a decision in response to the petition under 37 CFR 1.137(b), filed August 11, 2005, to revive the above-identified application.

This Petition is hereby **granted**.

The above-identified application became abandoned for failure to reply in a timely manner to the non-final Office action, mailed May 11, 2004. The Office action set a three (3) month period for reply, and provided for extensions of time under 37 CFR 1.136(a). No reply having been received, the application became abandoned on August 12, 2004. A Notice of Abandonment was mailed January 21, 2005.

With the instant petition, Petitioner has satisfied the requirements of a grantable petition under 37 CFR 1.137(b). A Reply in response to the May 11, 2004 Office action is filed with the instant petition. Accordingly, the petition is granted.

This application is being forwarded to Technology Center Art Unit 2112 for processing of the Reply filed August 11, 2005, in due course.

Telephone inquiries concerning this matter should be directed to the undersigned at (571) 272-3232.

Derek L. Woods
Attorney
Office of Petitions

#4

OIPE JC165
OCT 0 2 2001
PATENT & TRADEMARK OFFICE

UNITED STATES PATENT AND TRADEMARK OFFICE

COMMISSIONER FOR PATENTS
UNITED STATES PATENT AND TRADEMARK OFFICE
WASHINGTON, D.C. 20231
www.uspto.gov

APPLICATION NUMBER	FILING/RECEIPT DATE	FIRST NAMED APPLICANT	ATTORNEY DOCKET NUMBER
09/877,526	06/08/2001	Nassim Usman	00-816-C (700.002)

CONFIRMATION NO. 1423

FORMALITIES LETTER

OC000000006347274

20306
MCDONNELL BOEHNEN HULBERT & BERGHOFF
300 SOUTH WACKER DRIVE
SUITE 3200
CHICAGO, IL 60606

Date Mailed: 07/26/2001

NOTICE TO FILE MISSING PARTS OF NONPROVISIONAL APPLICATION

FILED UNDER 37 CFR 1.53(b)

Filing Date Granted

An application number and filing date have been accorded to this application. The item(s) indicated below, however, are missing. Applicant is given **TWO MONTHS** from the date of this Notice within which to file all required items and pay any fees required below to avoid abandonment. Extensions of time may be obtained by filing a petition accompanied by the extension fee under the provisions of 37 CFR 1.136(a).

- The oath or declaration is unsigned.
- To avoid abandonment, a late filing fee or oath or declaration surcharge as set forth in 37 CFR 1.16(e) of $65 for a small entity in compliance with 37 CFR 1.27, must be submitted with the missing items identified in this letter.
- **The balance due by applicant is $ 65.**

The application is informal since it does not comply with the regulations for the reason(s) indicated below.

The required item(s) identified below must be timely submitted to avoid abandonment:

- Substitute drawings in compliance with 37 CFR 1.84 because:
  - drawing sheets do not have the appropriate margin(s) (see 37 CFR 1.84(g)). Each sheet must include a top margin of at least 2.5 cm. (1 inch), a left side margin of at least 2.5 cm. (1 inch), a right side margin of at least 1.5 cm. (5/8 inch), and a bottom margin of at least 1.0 cm. (3/8 inch);
  - drawings contain excessive text. Suitable descriptive legends may be used, or may be required by the Examiner where necessary for understanding of the drawing but should contain as few words as possible (see 37 CFR 1.84(o));
- A copy of the "Sequence Listing" in computer readable form has been submitted. However, the content of the computer readable form does not comply with the requirements of 37 C.F.R. 1.822 and/or 1.823, as indicated on the attached copy of the marked -up "Raw Sequence Listing." Applicant must provide a substitute computer readable form (CRF) copy of the "Sequence Listing" and a statement that the content of the sequence listing information recorded in computer readable form is identical to the written (on paper or compact disc) sequence listing and, where applicable, includes no new matter, as required by 37 CFR

09877526 .100201

10/05/2001 MBELETE1 00000034 09877526

01 FC:205 65.00 OP

1.821(e), 1.821(f), 1.821(g), 1.825(b), or 1.825(d).

For questions regarding compliance to these requirements, please contact:

- **For Rules Interpretation, call (703) 308-4216**
- **To Purchase PatentIn Software, call (703) 306-2600**
- **For PatentIn Software Program Help, call (703) 306-4119 or e-mail at patin21help@uspto.gov or patin3help@uspto.gov**

A copy of this notice MUST be returned with the reply.

Customer Service Center
Initial Patent Examination Division (703) 308-1202
PART 2 - COPY TO BE RETURNED WITH RESPONSE

09875526.100201

PATENT

IN THE UNITED STATES PATENT AND TRADEMARK OFFICE
(MBHB Ref. No. 00-816-C (RPI Ref. No. 700.002))

In re Application of: Usman et al.	**Group Art Unit: Not Assigned**
Serial No.: 09/877,526	**Examiner: Not Assigned**
Filed: June 8, 2001	
For: NUCLEIC ACID SENSOR MOLECULES	

OIPE JC165
OCT 0 2 2001
PATENT & TRADEMARK OFFICE

TRANSMITTAL LETTER

Commissioner for Patents
Washington, D.C. 20231

Dear Sir:

In regard to the above identified application,

1. We are transmitting herewith the attached:
   - a) Amendment and Response to Notice to File Missing Parts mailed July 26, 2001 with Appendices A and B;
   - b) Copy of Notice to File Missing Parts;
   - c) Copy of Executed Oath or Declaration;
   - d) Replacement Page 112;
   - e) Substitute Figures 1 – 34;
   - f) Statement of Compliance of the substitute Sequence Listing under 37 CFR §1.821(f) and § 1.825(b);
   - g) Computer readable form (CRF) of the substitute Sequence Listing (1 diskette) under 37 CFR § 1.825(b);
   - h) Paper copy of Sequence Listing;
   - i) Return Receipt Postcard

2. With respect to additional fees:

   ____ A. No additional fee is required.
   _X_ B. Attached is a check in the amount of $65.00 pursuant to 37 CFR § 1.16(e).
   ____ C. Charge the total additional fee to our Deposit Account No. 13-2490. A duplicate copy of this sheet is enclosed.

3. General Authorization: Please charge any additional fees or credit overpayment to Deposit Account No. 13-2490. A duplicate copy of this sheet is enclosed.

4. CERTIFICATE UNDER 37 CFR 1.8: The undersigned hereby certifies that this Transmittal Letter and the paper, as described in paragraph 1 hereinabove, are being deposited with the United States Postal Service with sufficient postage as first class mail in an envelope addressed to: Commissioner for Patents, Washington, D.C. 20231 on September 26, 2001.

By _____
Lisa M. W. Hillman, Reg. No. 43,673

McDONNELL BOEHNEN
HULBERT & BERGHOFF
300 South Wacker Drive, Suite 3200
Chicago, Illinois 60606
Phone: 312/913-0001
Fax: 312/913-0002

Date: September 26, 2001

UNITED STATES PATENT AND TRADEMARK OFFICE

Commissioner for Patents
United States Patent and Trademark Office
P.O. Box 1450
Alexandria, VA 22313-1450
www.uspto.gov

In re Patent No. 6736314
Issue Date: May 18,2004
Application No. 09877533
Filed: June 8,2001
Attorney Docket No. 43790/204811

:
:DECISION GRANTING PETITION
:UNDER 37 CFR 1.378(c)
:

This is a decision on the electronic petition, filed September 25,2008 ,under 37 CFR 1.378(c) to accept the unintentionally delayed payment of the 3.5 year maintenance fee for the above-identified patent.

The petition is **GRANTED**.

The maintenance fee is accepted, and the above-identified patent reinstated as of September 25,2008 . This decision also constitutes notice that the fee has been accepted. An electronic copy of the petition and this decision has been created as an entry in the Image File Wrapper. Nevertheless, petitioner should print and retain an independent copy.

Telephone inquiries related to this electronic decision should be directed to the Electronic Business Center at 1-866-217-9197.

Approved for use through 04/30/2009. OMB 0651-0016
U.S. Patent and Trademark Office: U.S. DEPARTMENT OF COMMERCE
Under the Paperwork Reduction Act of 1995, no persons are required to respond to a collection of information unless it displays valid OMB control number.

PETITION TO ACCEPT UNINTENTIONALLY DELAYED PAYMENT OF MAINTENANCE FEE IN AN EXPIRED PATENT (37 CFR 1.378(c))

Patent Number	Issue Date (YYYY-MM-DD)	Application Number	Filing Date (YYYY-MM-DD)	Docket Number (if applicable)
6,736,314	2004-05-18	09/877,533	2001-06-08	US 6,736,314

CAUTION: Maintenance fee (and surcharge, if any) payment must correctly identify: (1) the patent number and (2) the application number of the actual U.S. application leading to issuance of that patent to ensure the fee(s) is/are associated with the correct patent. 37 CFR 1.366(c) and (d).

SMALL ENTITY
☐ Patentee claims, or has previously claimed, small entity status. See 37 CFR 1.27.

LOSS OF ENTITLEMENT TO SMALL ENTITY STATUS
☐ Patentee is no longer entitled to small entity status. See 37 CFR 1.27(g)

NOT Small Entity		Small Entity	
Fee	Code	Fee	Code
◉ 3 ½ year	(1551)	○ 3 ½ year	(2551)
○ 7 ½ year	(1552)	○ 7 ½ year	(2552)
○ 11 ½ year	(1553)	○ 11 ½ year	(2553)

SURCHARGE
The surcharge required by 37 CFR 1.20(i)(2) (Fee Code 1558) must be paid as a condition of accepting unintentionally delayed payment of the maintenance fee.

MAINTENANCE FEE (37 CFR 1.20(e)-(g))
The appropriate maintenance fee must be submitted with this petition.

STATEMENT
THE UNDERSIGNED CERTIFIES THAT THE DELAY IN PAYMENT OF THE MAINTENANCE FEE TO THIS PATENT WAS UNINTENTIONAL

PETITIONER(S) REQUEST THAT THE DELAYED PAYMENT OF THE MAINTENANCE FEE BE ACCEPTED AND THE PATENT REINSTATED

THIS PORTION MUST BE COMPLETED BY THE SIGNATORY OR SIGNATORIES

37 CFR 1.378(d) states: "Any petition under this section must be signed by an attorney or agent registered to practice before the Patent and Trademark Office, or by the patentee, the assignee, or other party in interest."

I certify, in accordance with 37 CFR 1.4(d)(4) that I am

◉ An attorney or agent registered to practice before the Patent and Trademark Office

○ A sole patentee

○ A joint patentee; I certify that I am authorized to sign this submission on behalf of all the other patentees.

○ A joint patentee; all of whom are signing this e-petition

○ The assignee of record of the entire interest

Patent Practitioner			
A signature of the applicant or representative is required in accordance with 37 CFR 1.33 and 10.18. Please see 37 CFR 1.4(d) for the form of the signature			
Signature	/Christopher W Bosken/	Date (YYYY-MM-DD)	2008-09-25
Name	Christopher W. Bosken	Registration Number	58887

This collection of information is required by 37 CFR 1.378(c). The information is required to obtain or retain a benefit by the public which is to file (and by the USPTO to process) an application. Confidentiality is governed by 35 U.S.C. 122 and 37 CFR 1.11 and 1.14. This collection is estimated to take 1 hour to complete, including gathering, preparing, and submitting the completed application form to the USPTO. Time will vary depending upon the individual case. Any comments on the amount of time you require to complete this form and/ or suggestions for reducing this burden, should be sent to the Chief Information Officer, U.S. Patent and Trademark Office, U.S. Department of Commerce, P.O. Box 1450, Alexandria, VA 22313-1450. DO NOT SEND FEES OR COMPLETED FORMS TO THIS ADDRESS. **This form can only be used when in conjunction with EFS-Web. If this form is mailed to the USPTO, it may cause delays in reinstating the patent.**

Privacy Act Statement

The Privacy Act of 1974 (P.L. 93-579) requires that you be given certain information in connection with your submission of the attached form related to a patent application or patent. Accordingly, pursuant to the requirements of the Act, please be advised that: (1) the general authority for the collection of this information is 35 U.S.C. 2(b)(2); (2) furnishing of the information solicited is voluntary; and (3) the principal purpose for which the information is used by the U.S. Patent and Trademark Office is to process and/or examine your submission related to a patent application or patent. If you do not furnish the requested information, the U.S. Patent and Trademark Office may not be able to process and/or examine your submission, which may result in termination of proceedings or abandonment of the application or expiration of the patent.

The information provided by you in this form will be subject to the following routine uses:

1. The information on this form will be treated confidentially to the extent allowed under the Freedom of Information Act (5 U.S.C. 552) and the Privacy Act (5 U.S.C. 552a). Records from this system of records may be disclosed to the Department of Justice to determine whether the Freedom of Information Act requires disclosure of these record s.

2. A record from this system of records may be disclosed, as a routine use, in the course of presenting evidence to a court, magistrate, or administrative tribunal, including disclosures to opposing counsel in the course of settlement negotiations.

3. A record in this system of records may be disclosed, as a routine use, to a Member of Congress submitting a request involving an individual, to whom the record pertains, when the individual has requested assistance from the Member with respect to the subject matter of the record.

4. A record in this system of records may be disclosed, as a routine use, to a contractor of the Agency having need for the information in order to perform a contract. Recipients of information shall be required to comply with the requirements of the Privacy Act of 1974, as amended, pursuant to 5 U.S.C. 552a(m).

5. A record related to an International Application filed under the Patent Cooperation Treaty in this system of records may be disclosed, as a routine use, to the International Bureau of the World Intellectual Property Organization, pursuant to the Patent Cooperation Treaty.

6. A record in this system of records may be disclosed, as a routine use, to another federal agency for purposes of National Security review (35 U.S.C. 181) and for review pursuant to the Atomic Energy Act (42 U.S.C. 218(c)).

7. A record from this system of records may be disclosed, as a routine use, to the Administrator, General Services, or his/her designee, during an inspection of records conducted by GSA as part of that agency's responsibility to recommend improvements in records management practices and programs, under authority of 44 U.S.C. 2904 and 2906. Such disclosure shall be made in accordance with the GSA regulations governing inspection of records for this purpose, and any other relevant (i.e., GSA or Commerce) directive. Such disclosure shall not be used to make determinations about individuals.

8. A record from this system of records may be disclosed, as a routine use, to the public after either publication of the application pursuant to 35 U.S.C. 122(b) or issuance of a patent pursuant to 35 U.S.C. 151. Further, a record may be disclosed, subject to the limitations of 37 CFR 1.14, as a routine use, to the public if the record was filed in an application which became abandoned or in which the proceedings were terminated and which application is referenced by either a published application, an application open to public inspections or an issued patent.

9. A record from this system of records may be disclosed, as a routine use, to a Federal, State, or local law enforcement agency, if the USPTO becomes aware of a violation or potential violation of law or regulation.

UNITED STATES PATENT AND TRADEMARK OFFICE

Commissioner for Patents
United States Patent and Trademark Office
P.O. Box 1450
Alexandria, VA 22313-1450
www.uspto.gov

FOLEY & LARDNER LLP
777 EAST WISCONSIN AVENUE
MILWAUKEE WI 53202-5306

COPY MAILED
OCT 13 2006
OFFICE OF PETITIONS

In re Application of	:	
LaBrie, et al.	:	
Application No. 09/887,556	:	DECISION ON PETITION
Filed: June 22, 2001	:	TO WITHDRAW
Attorney Docket No. 053028-0104	:	FROM RECORD
	:	

This is a decision on the Request to Withdraw as attorney or agent of record under 37 C.F.R. § 1.36(b), filed July 07, 2006.

The request is **APPROVED**.

A grantable request to withdraw as attorney/agent of record must be signed by every attorney/agent seeking to withdraw or contain a clear indication that one attorney is signing on behalf of another/others. A request to withdraw will not be approved unless at least 30 (thirty) days would remain between the date of approval and the later of the expiration date of a time to file a response or the expiration date of the maximum time period which can be extended under 37 C.F.R. § 1.136(a).

The request was signed by Matthew J. Swietlik on behalf of all attorneys of record who are associated with customer No. 26371.

Applicant is reminded that there is no attorney of record at this time.

All future correspondence will be directed to the first named inventor David William LaBrie at the address indicated below.

A reply to the non-final Office action of April 10, 2006 with a three-month extension of time has been received.

Telephone inquiries concerning this decision should be directed to Patricia Volpe at 571-272-6825.

Diana L. Walsh for
David Bucci
Petitions Examiner
Office of Petitions

cc: David William LaBrie
8117 Milwaukee Avenue
Wauwatosa, WI 53213

UNITED STATES PATENT AND TRADEMARK OFFICE

UNITED STATES DEPARTMENT OF COMMERCE
United States Patent and Trademark Office
Address: COMMISSIONER FOR PATENTS
P.O. Box 1450
Alexandria, Virginia 22313-1450
www.uspto.gov

APPLICATION NUMBER	FILING OR 371 (c) DATE	FIRST NAMED APPLICANT	ATTY. DOCKET NO./TITLE
09/887,556	06/22/2001	David William LaBrie	053028-0104

CONFIRMATION NO. 5873

OC000000020795443

26371
FOLEY & LARDNER LLP
777 EAST WISCONSIN AVENUE
MILWAUKEE, WI 53202-5306

Date Mailed: 10/12/2006

NOTICE REGARDING CHANGE OF POWER OF ATTORNEY

This is in response to the Power of Attorney filed 07/07/2006.

- The withdrawal as attorney in this application has been accepted. Future correspondence will be mailed to the new address of record. 37 CFR 1.33.

PATRICIA A VOLPE
OP (571) 272-6825

FORMER ATTORNEY/AGENT COPY

UNITED STATES PATENT AND TRADEMARK OFFICE

Commissioner for Patents
United States Patent and Trademark Office
P.O. Box 1450
Alexandria, VA 22313-1450
www.uspto.gov

KENNETH P. KROHN
2131 PALOMAR AIRPORT ROAD, SUITE 320
CARLSBAD, CA 92009

COPY MAILED

MAY 0 4 2005

OFFICE OF PETITIONS

In re Application of :
Douglas I. Lovison :
Application No. 09/877,577 :
Filed: June 7, 2001 :
Attorney Docket No. 189.11 :

ON PETITION

This is a decision on the petition under 37 CFR 1.137(a), filed February 16, 2005, to revive the above-identified application.

The petition is **dismissed**.

Any request for reconsideration of this decision must be submitted within TWO (2) MONTHS from the mail date of this decision. Extensions of time under 37 CFR 1.136(a) are permitted. The reconsideration request should include a cover letter entitled "Renewed Petition under 37 CFR 1.137(a)."

This application became abandoned for failure to timely reply to the non-final Office action mailed September 29, 2003. Accordingly, this application became abandoned on December 30, 2003. A Notice of Abandonment was mailed on May 4, 2004.

A grantable petition to revive an abandoned application under 37 CFR 1.137(a) must be accompanied by:

(1) The required reply, unless previously filed. In a nonprovisional application abandoned for failure to prosecute, the required reply may be met by the filing of a continuing application. In an application or patent, abandoned or lapsed for failure to pay the issue fee or any portion thereof, the required reply must be the payment of the issue fee or any outstanding balance thereof;

(2) The petition fee as set forth in § 1.17(l);

(3) A showing to the satisfaction of the Commissioner that the entire delay in filing the required reply from the due date for the reply until the filing of a grantable petition pursuant to this paragraph was unavoidable; and

(4) Any terminal disclaimer (and fee as set forth in § 1.20 (d)) required pursuant to paragraph (c) of this section.

This petition lacks item (3) above.

Decisions on reviving abandoned applications on the basis of "unavoidable" delay have adopted the reasonably prudent person standard in determining if the delay was unavoidable:

> The word 'unavoidable' . . . is applicable to ordinary human affairs, and requires no more or greater care or diligence than is generally used and observed by prudent and careful men in relation to their most important business. It permits them in the exercise of this care to rely upon the ordinary and trustworthy agencies of mail and telegraph, worthy and reliable employees, and such other means and instrumentalities as are usually employed in such important business. If unexpectedly, or through the unforeseen fault or imperfection of these agencies and instrumentalities, there occurs a failure, it may properly be said to be unavoidable, all other conditions of promptness in its rectification being present.

In re Mattullath, 38 App. D.C. 497, 514-15 (1912)(quoting Ex parte Pratt, 1887 Dec. Comm'r Pat. 31, 32-33 (1887)); see also Winkler v. Ladd, 221 F. Supp. 550, 552, 138 USPQ 666, 167-68 (D.D.C. 1963), aff'd, 143 USPQ 172 (D.C. Cir. 1963); Ex parte Henrich, 1913 Dec. Comm'r Pat. 139, 141 (1913). In addition, decisions on revival are made on a "case-by-case basis, taking all the facts and circumstances into account." Smith v. Mossinghoff, 671 F.2d 533, 538, 213 USPQ 977, 982 (D.C. Cir. 1982). Finally, a petition cannot be granted where a petitioner has failed to meet his or her burden of establishing that the delay was "unavoidable." Haines v. Quigg, 673 F. Supp. 314, 316-17, 5 USPQ2d 1130, 1131-32 (N.D. Ind. 1987).

Petitioner asserts that the delay was caused by applicant's previous attorney, Neil K. Nydegger. Petitioner states, "According to PTO records, the PTO mailed an Office Action to the Petitioner's attorney of record, Neil K. Nydegger, on September 29, 2003. According to records received by Petitioner from Mr. Nydegger, Mr. Nydegger received the Office Action on October 2, 2003. ... Mr. Nydegger did not inform the Petitioner that Mr. Nydegger had received the Office Action or that the Office Action had been mailed by the PTO or received by Mr. Nydeger. The Petitioner is not aware of any reply being filed to the Office Action. According to PTO records (Public PAIR), the Application was abandoned by the PTO on May 3, 2004 for Petitioner's failure to reply to the Office Action."

Petitioner's statement indicates that Neil K. Nydegger was responsible for prosecution of the above-identified application when the reply necessary to avoid abandonment was due. Therefore, petitioner must provide a statement from Neil K. Nydegger explaining why action was not timely taken to prevent the above-identified application from becoming abandoned.

However, please note, the Patent and Trademark Office must rely on the actions or inactions of duly authorized and voluntarily chosen representatives of the applicant, and petitioner is bound by the consequences of those actions or inactions. (Emphasis added). Link v. Wabash, 370 U.S. 626, 633-34 (1962); Huston v. Ladner, 973 F.2d 1564, 1567, 23 U.S.P.Q.2d 1910, 1913 (Fed.

Cir. 1992); see also Haines v. Quigg, 673 F. Supp. 314, 317, 5 U.S.P.Q.2d 1130, 1132 (D.N. Ind. 1987).

Accordingly, the showing of record is not sufficient to establish to the satisfaction of the Commissioner that the delay was unavoidable within the meaning of 35 U.S.C. § 133 and 37 CFR 1.137(a).

Further correspondence with respect to this matter should be addressed as follows:

By mail: Mail Stop Petition
Commissioner for Patents
Box 1450
Alexandria, VA 22313

By FAX: (703) 872-9306
Attn: Office of Petitions

By hand: Customer Service Window
Randolph Building
401 Dulany Street
Alexandria, VA 22314

Telephone inquiries should be directed to the undersigned at (571) 272-3228.

Edward J. Tannouse
Petitions Attorney
Office of Petitions/Patent
United States Patent and Trademark Office

UNITED STATES PATENT AND TRADEMARK OFFICE

Commissioner for Patents
United States Patent and Trademark Office
P.O. Box 1450
Alexandria, VA 22313-1450
www.uspto.gov

KENNETH P. KROHN
2131 PALOMAR AIRPORT ROAD, SUITE 320
CARLSBAD, CA 92009

COPY MAILED

JUN 28 2005

OFFICE OF PETITIONS

In re Application of	:	
Douglas I. Lovison	:	
Application No. 09/877,577	:	ON PETITION
Filed: June 7, 2001	:	
Attorney Docket No. 189.11	:	

This is a decision on the renewed petition under 37 CFR 1.137(b), filed June 11, 2005, to revive the above-identified application.

The petition is **GRANTED**.

This application became abandoned for failure to timely reply to the non-final Office action mailed September 29, 2003. Accordingly, this application became abandoned on December 30, 2003. A Notice of Abandonment was mailed on May 4, 2004.

The file is being forwarded to Technology Center 3700, for review of the amendment, filed June 11, 2005, *in due course*.

Telephone inquiries concerning this matter may be directed to the undersigned at (571) 272-3228.

Edward J. Tannouse
Petitions Attorney
Office of Petitions/Patent
United States Patent and Trademark Office

UNITED STATES PATENT AND TRADEMARK OFFICE

Commissioner for Patents
United States Patent and Trademark Office
P.O. Box 1450
Alexandria, VA 22313-1450
www.uspto.gov

Paper No. 13

Sonnenschein Nath & Rosenthal
PO Box 061080
Wacker Drive Station, Sears Tower
Chicago, IL 60606-1080

COPY MAILED

OCT 0 9 2003

OFFICE OF PETITIONS

In re Application of	:	
Nobuyuki Shigeno et al.	:	
Application No. 09/877,584	:	ON PETITION
Filed: June 8, 2001	:	
Attorney Docket No. 09792909-5047	:	

This is a decision on the petition under 37 CFR 1.137(b), filed September 30, 2003, to revive the above-identified application.

The petition is GRANTED.

The above-identified application became abandoned for failure to reply within the meaning of 37 CFR 1.113 in a timely manner in reply to the final Office action mailed March 19, 2003, which set a shortened statutory period for reply of three months from the mail date of the Notice. No extensions of time under the provisions of 37 CFR 1.136 have been obtained. Accordingly, the application became abandoned on June 20, 2003.

The application file is being forwarded to Technology Center AU 2871 for processing the Request for Continued Examination pursuant to 37 CFR 1.114 filed with the instant petition.

Telephone inquiries concerning this decision should be directed to Latrice Bond at (703) 308-6911.

Latrice Bond
Petitions Examiner
Office of Petitions
Office of the Deputy Commissioner
for Patent Examination Policy

UNITED STATES PATENT AND TRADEMARK OFFICE

#21
DW

NOV 29 2004

MAILED

NOV 29 2004

OFFICE OF THE DIRECTOR
TC 3600

Commissioner for Patents
United States Patent and Trademark Office
P.O. Box 1450
Alexandria, VA 22313-1450
www.uspto.gov

Stanley R. Jones
49 Middle Street
Hallowell, ME 04347

November 8, 2004

In re Application of:
William C. BASFORD
Application No. 09/877,585
Filed: December 19, 2002

DECISION ON PETITION UNDER 37 CFR 1.181

This is in response to the petition filed on November 25, 2003 under 37 CFR 1.181 requesting reconsideration, and in the alternative, the withdrawal of the finality of the Office action mailed May 27, 2003 as being premature.

Applicant alleges that the Final Office action mailed May 27, 2003 was both premature and based upon unsound considerations. Applicant further argues that he has not received an adequate examination of the invention because the examiner failed to appreciate the technology described and claimed in the instant application.

A review of the record reveals that an amendment after final was received on July 30, 2003 in response to the Final Office action. An Advisory action was mailed on August 26, 2003 and re-mailed on October 17, 2003 to a corrected address. Because the amendment after final was filed within 2 months of the date of the Final Office action, the extension period runs from the Advisory action date of October 17, 2003.

A Notice of Appeal was filed along with the above Petition on November 25, 2003. However, a Notice of Abandonment was mailed on March 22, 2004 for failing to provide a timely response within the extension period that should have been given in the Advisory action.

Applicant did not file an extension of time in order to extend the period of response from the date of the Advisory action dated October 17, 2003. Therefore, the Notice of Appeal is untimely.

With respect the petition filed November 25, 2003, it is noted that MPEP specifically states "Any question as to prematureness of a final rejection should be raised, if at all, while the application is **still pending** before the primary examiner." [Emphasis added] See MPEP 706.07 (c). Furthermore 37 C.F.R. 1.181 (f) states, "the mere filing of a petition will not stay any period for reply that may be running against the application" and "[a]ny petition under this part not filed within two months of the mailing date of the action or notice from which relief is requested may be dismissed as **untimely**...[t]his two-month is not extendable." [Emphasis added].

Therefore, the Petition is moot since it was filed untimely as the Application was abandoned as of the date of the Advisory action mailed October 17, 2003.

It is noted that a Petition to Revive under 37 C.F.R. 1.137 (a) or, in the alternative, 37 C.F.R. 1.137 (b) was received on April 6, 2004. Upon the mailing of this decision, the application will be forwarded to the Office of Petitions for consideration of the Petition to Revive.

The petition is DISMISSED.

Telephone inquiries should be directed to D. Glenn Dayoan, Supervisory Patent Examiner, at (703) 308-3102.

Robert Oberleitner, Director
Patent Technology Center 3600
(703) 308-1134

snm/dgd:11/29/04

UNITED STATES PATENT AND TRADEMARK OFFICE

COMMISSIONER FOR PATENTS
UNITED STATES PATENT AND TRADEMARK OFFICE
P.O. BOX 1450
ALEXANDRIA, VA 22313-1450
www.uspto.gov

Paper No. 10

STANLEY R. JONES
PATENTS
49 MIDDLE STREET
HALLOWELL, ME 04347

COPY MAILED

JAN 07 2005

OFFICE OF PETITIONS

In re Application of :
William Colin Basford :
Application No. 09/877,585 :
Filed: June 8, 2001 : ON PETITION
Title of Invention: :
APPARATUS TO REDUCE BASE :
DRAGBEHIND BLUFF BODIES :

This is a decision on the Petition to the Commissioner under 37 CFR 1.137(a) or 37 CFR 1.137(b), filed April 6, 2004, to revive the above-identified application.

The petition under 37 CFR 1.137(a) is dismissed.

The petition under 37 CFR 1.137(b) is dismissed.

Any further petition to revive the above-identified application (under 37 CFR 1.137(a)), must be submitted within TWO (2) MONTHS from the mail date of this decision. Extensions of time under 37 CFR 1.136(a) are permitted. The reconsideration request should include a cover letter entitled "Request for Reconsideration of Petition under 37 CFR 1.137", and be addressed to Petitions Attorney Derek L. Woods. This is **not** final agency action within the meaning of 5 U.S.C. § 704.

Background:

The above-identified application became abandoned for failure to timely and properly reply to the final Office action, mailed May 27, 2003. The Office action set a three (3) month period for reply.

Applicant filed a response to the Office action on July 30, 2003; however, the response failed to place the application in condition for allowance. Applicant was so advised in an Advisory Action mailed August 26, 2003.

Applicant subsequently, on November 26, 2003, filed a Notice of Appeal and a petition under 37 CFR 1.181 requesting the Office reconsider the final Office action. No extension-of-time was filed with the Notice of Appeal.

The petition was dismissed as moot in a Decision mailed November 29, 2004, because the application was abandoned[1] at the time the petition was filed.

Accordingly, the application became abandoned for failure to timely and properly reply to the final Office action mailed May 27, 2003. A Notice of Abandonment was mailed on March 22, 2004.

A Grantable Petition Under 37 CFR 1.137(a)

A grantable petition to revive an abandoned application under 37 CFR 1.137(a) must be accompanied by: (**1**) the required reply (unless previously filed), which may met by the filing of a notice of appeal and the requisite fee; a Request for Continued Examination; an amendment or request for reconsideration which *prima facie* places the application in condition for allowance, or a first or second submission under 37 CFR 1.129(a) if the application has been pending for at least two years as of June 8, 1995, taking into account any reference made in such application to any earlier filed application under 35 USC 120, 121 and 365(c); (**2**) the petition fee as set forth in 37 CFR 1.17(l); (**3**) a showing to the satisfaction of the Commissioner that the entire delay in filing the required reply from the due date for the reply until the filing of a grantable petition pursuant to 37 CFR 1.137(a) was unavoidable; and (**4**) any terminal disclaimer (and fee as set forth in 37 CFR 1.20(d)) required pursuant to 37 CFR 1.137(c).

Applicant lacks items (1) and (3) as set forth above.

Applicable Law

The general standard applied by the Office requires petitioner to establish that petitioner treated the patent the same as a reasonable and prudent person would treat his or her most

[1] The application became abandoned for Applicant's failure to timely and properly reply to the final Office action, mailed May 27, 2004. The Notice of Appeal was not timely because it did not include a request for extension-of-time and fee, and no authorization to charge fees has been located among the application papers.

important business.[2] 35 U.S.C. 41(c)(1) states, "The Commissioner may accept the payment of any maintenance fee ... at any time ... if the delay is shown *to the satisfaction of the Commissioner* to have been unavoidable." (emphasis added). "In the specialized field of patent law, ... the Commissioner of Patent and Trademarks is primarily responsible for the application and enforcement of the various narrow and technical statutory and regulatory provisions. His interpretation of those provisions is entitled to considerable deference." Rydeen v. Quigg, 748 F.Supp. 900, 904, 16 U.S.P.Q.2d (BNA)1876 (D.D.C. 1990), aff'd without opinion (Rule 36), 937 F.2d 623 (Fed. Cir. 1991) (citing Morganroth v. Quigg, 885 F.2d 843, 848, 12 U.S.P.Q.2d (BNA) 1125 (Fed. Cir. 1989); Ethicon, Inc. v. Quigg, 849 F.2d 1422, 1425, 7 U.S.P.Q.2d (BNA) 1152 (Fed. Cir. 1988) ("an agency' interpretation of a statute it administers is entitled to deference"); see also Chevron U.S.A. Inc. v. Natural Resources Defense Council, Inc., 467 U.S. 837, 844, 81 L. Ed. 694, 104 S. Ct. 2778 (1984) ("if the statute is silent or ambiguous with respect to the specific issue, the question for the court is whether the agency's answer is based on a permissible construction of the statute.")).

"The critical phrase 'unless it be shown to the satisfaction of the Commissioner that such delay was unavoidable' has remained unchanged since first enacted in 1861." Smith v. Mossinghoff, 671 F.2d 533, 538, 213 U.S.P.Q. (BNA) 977 (D.C. Cir. 1982). The standard for "unavoidable" delay for reinstating a patent is the same as the unavoidable standard for reviving an application. See Ray v. Lehman, 55 F.3d 606, 608-609, 34 U.S.P.Q.2d (BNA) 1786, 1787 (Fed. Cir. 1995) (citing In re patent No. 4,409,763, 7 U.S.P.Q.2d (BNA) 1798, 1800 (Comm'r Pat. 1990; Smith v. Mossinghoff, 671 F.2d 533, 538, 213 U.S.P.Q. (BNA) 977 (D.C. Cir. 1982). The court in In re Mattullath, accepted the standard which had been proposed by Commissioner Hall which "requires no more or greater care or diligence than is generally used and observed by prudent and careful men in relation to their most important business." In re Mattullath, 38 App. D.C. 497, 514-515 (1912) (quoting Ex parte Pratt, 1887 Dec. Comm'r Pat. 31, 32-33 (1887)). However, "The question of whether an applicant's delay in prosecuting an application was unavoidable [will] be decided on a case-by-case basis, taking

[2] The Commissioner is responsible for determining the standard for unavoidable delay and for applying that standard.

all of the facts and circumstances into account."[3] Nonawareness of the content of, or a misunderstanding of, PTO statutes, PTO rules, the MPEP, or Official Gazette notices, does not constitute unavoidable delay.[4] The statute requires a "showing" by petitioner. Therefore, petitioner has the burden of proof. The decision will be based solely on the written, administrative record in existence. It is not enough that the delay was unavoidable; petitioner must prove that the delay was unavoidable. A petition will not be granted if petitioner provides insufficient evidence to "show" that the delay was unavoidable.

Applicant is further advised that the Patent and Trademark Office must rely on the actions or inactions of duly authorized and voluntarily chosen representatives of the applicant, and applicant is bound by the consequences of those actions or inactions. Link v. Wabash, 370 U.S. 626, 633-34 (1962); Huston v. Ladner, 973 F.2d 1564, 1567, 23 USPQ2d 1910, 1913 (Fed. Cir. 1992); see also Haines v. Quigg, 673 F. Supp. 314, 317, 5 USPQ2d 1130, 1132 (D.N. Ind. 1987). Specifically, petitioner's delay caused by the actions or inactions of his voluntarily chosen representative does not constitute unavoidable delay within the meaning of 35 U.S.C. 133 or 37 CFR 1.137(a). Haines v. Quigg, 673 F. Supp. 314, 5 USPQ2d 1130 (D. Ind. 1987); Smith v. Diamond, 209 USPQ 1091 (D.D.C. 1981); Potter v. Dann, 201 USPQ 574 (D.D.C. 1978); Ex parte Murray, 1891 Dec. Comm'r Pat. 130, 131 (Comm'r Pat. 1891). In re Mattullath, 38 App. D.C. 497, 514-15 (1912)(quoting Ex parte Pratt, 1887 Dec. Comm'r Pat. 31, 32-33 (1887)); see also Winkler v. Ladd, 221 F. Supp. 550, 552, 138 USPQ 666, 167-68 (D.D.C. 1963), aff'd, 143 USPQ 172 (D.C. Cir. 1963); Ex parte Henrich, 1913 Dec. Comm'r Pat. 139, 141 (1913).

---

[3] Smith v. Mossinghoff, 671 F.2d 533, 538, 213 U.S.P.Q. (BNA) 977 (1982).

[4] See Smith v. Mossinghoff, 671 F.2d 533, 538, 213 U.S.P.Q. (BNA) 977 (Fed. Cir. 1982) (citing Potter v. Dann, 201 U.S.P.Q. (BNA) 574 (D. D.C. 1978) for the proposition that counsel's nonawareness of PTO rules does not constitute "unavoidable" delay)); Vincent v. Mossinghoff, 1985 U.S. Dist. LEXIS 23119, 13, 230 U.S.P.Q. (BNA) 621 (D. D.C. 1985) (Plaintiffs, through their counsel's actions, **or their own**, must be held responsible for having noted the MPEP section and Official Gazette notices expressly stating that the certified mailing procedures outlined in 37 CFR 1.8(a) do not apply to continuation applications.) (Emphasis added).

Finally, a "delay (in responding) resulting from the lack of knowledge or improper application of the patent statute, rules of practice, or MPEP, [] does not constitute unavoidable delay." MPEP 711.03(c).

Applicant's Assertion

Applicant files the instant petition and asserts that a timely amendment was filed within two (2) months of the final Office action. Applicant asserts that the filing was "clearly proper in all respects." Petition at pp.4-5. Applicant further asserts that this Office's mail room lost documents that applicant filed, and that "[i]t certainly constitutes unavoidable situation when such a timely amended case is held abandoned because of lost documents." Petition at p.6.

It is initially noted that Applicant's Notice of Appeal contained a Certificate of Mailing (37 CFR 1.8) noting the mail date of the Notice of Appeal as November 26, 2003; however, a Notice of Appeal must be filed within the time period set forth in 37 CFR §§ 1.134 and 1.136. *See*, 37 CFR 1.191. Here, the final Office action was mailed May 27, 2003, and provided a shortened statutory reply period of three (3) months. Having failed to obtain any extensions-of-time, the application became abandoned on August 28, 2003.

As to item (1), Applicant has failed to provide the required reply. As noted supra, the Notice of Appeal was untimely as it failed to include an extension-of- time request and fee. The Amendment, filed on July 30, 2003 in response to the May 27, 2003 final Office action, failed to place the application in condition for allowance. Applicant was so notified in the Advisory Action mailed August 26, 2003.

Applicant must file the required reply to the final Office action.

As to item (3), Applicant has failed to demonstrate that the delay in responding to the final Office action was unavoidable. Applicant asserts that the Amendment, filed July 30, 2003, was timely; however, the reply to an Office action must be both timely and proper. As provided in 37 CFR § 1.135,

> [p]rosecution of an application to save it from abandonment pursuant to paragraph (a) of this section must include such complete and proper reply as the condition of the application may require. The admission of, or refusal to admit, any amendment after final rejection or any amendment not responsive to the last action, or any related proceedings, will not operate to save the application from abandonment.

37 CFR § 1.135(b)

Regarding Applicant's assertion that the PTO mail-room lost Applicant's documents, Applicant provided a proper Certificate of Mailing and the documents, whenever they were located or re-transmitted, would have received a filing date as of the date of the Certificate of Mailing; however, the documents were not timely because Applicant failed to file the appropriate extension-of-time request and fee.

A Grantable Petition Under 37 CFR 1.137(b)

A grantable petition to revive an abandoned application under 37 CFR 1.137(b) must be accompanied by: (**1**) the required reply (unless previously filed); (**2**) the petition fee required by 37 CFR 1.17(m); (**3**) a statement that the entire delay in filing the required reply from the due date for the reply until the filing of a grantable petition pursuant to 37 CFR 1.137(b) was unintentional; and (**4**) if required, a terminal disclaimer (and fee as set forth in 37 CFR 1.20(d)). Applicant lacks item (**1**).

Applicant lacks items (1) and (3).

As to item (1), as stated supra, Applicant has failed to provide the required reply.

As to item (3), Applicant must provide a statement that the entire delay in filing the required reply from the due date for the reply until the filing of a grantable petition pursuant to 37 CFR 1.137(b) was unintentional.

Further correspondence with respect to this matter should be addressed as follows:

By mail: Commissioner for Patents
PO Box 1450
Alexandria, VA 22313-1450

By facsimile: (703) 308-6916
Attn: Office of Petitions

By hand: 220 20th Street S.
Customer Window
Crystal Plaza Two, Lobby Room 1B03
Arlington, VA 22202

Telephone inquiries concerning this matter should be directed to the undersigned at (571) 272-3232.

Derek L. Woods
Attorney/Advisor
Office of Petitions

UNITED STATES PATENT AND TRADEMARK OFFICE

COMMISSIONER FOR PATENTS
UNITED STATES PATENT AND TRADEMARK OFFICE
P.O. BOX 1450
ALEXANDRIA, VA 22313-1450
www.uspto.gov

STANLEY R. JONES
PATENTS
49 MIDDLE STREET
HALLOWELL, ME 04347

COPY MAILED
MAR 16 2005
OFFICE OF PETITIONS

In re Application of :
William Colin Basford :
Application No. 09/877,585 :
Filed: June 8, 2001 : ON PETITION
Title of Invention: :
APPARATUS TO REDUCE BASE :
DRAG BEHIND BLUFF BODIES :

This is a decision on the Petition to the Commissioner under 37 CFR 1.137(a) or 37 CFR 1.137(b), filed April 6, 2004, to revive the above-identified application.

This Petition is hereby **granted**.

Background:

The above-identified application became abandoned for failure to timely and properly reply to the final Office action, mailed May 27, 2003. The Office action set a three (3) month period for reply.

Applicant filed a response to the Office action on July 30, 2003; however, the response failed to place the application in condition for allowance. Applicant was so advised in an Advisory Action mailed August 26, 2003.

Applicant subsequently, on November 26, 2003, filed a Notice of Appeal and a petition under 37 CFR 1.181 requesting the Office reconsider the final Office action. No extension-of-time was filed with the Notice of Appeal.

The petition was dismissed as moot in a Decision mailed November 29, 2004, because the application was abandoned[1] at the time the petition was filed.

[1] The application became abandoned for Applicant's failure to timely and properly reply to the final Office action, mailed May 27, 2004. The Notice of Appeal was not timely because it did not include a request for extension-

Accordingly, the application became abandoned for failure to timely and properly reply to the final Office action mailed May 27, 2003. A Notice of Abandonment was mailed on March 22, 2004.

It is noted that Applicant has filed 2 appeal briefs with the instant petition on March 5, 2005 that appear to be copies of each other and are both dated January 26, 2004, in addition to the Notice of Appeal[2]. Applicant is advised that the fee for Filing a Brief in Support of Appeal is $250.00 effective December 8, 2004.

A review of Office records reveal that Applicant paid $165.00 on November 25, 2003, for the filing of a Notice of Appeal, and $165 on January 26, 2004, for filing an Appeal Brief, in addition to the $250.00 paid with the Notice of Appeal and Appeal Brief filed with this petition. The 250.00 paid with the filing of this petition and Notice of Appeal and Appeal Brief has been applied to the filing of the Notice of Appeal. Regarding the fee for the Appeal Brief, applicant has submitted $165.00, and a balance remains due of $85.00. The $165.00 fee paid for the November 25, 2003, Notice of Appeal has been applied to the $250.00 fee for filing an appeal brief. A refund of the balance ($80.00) has been scheduled via treasury check.

The application is being referred to Technology Center 3612.

Telephone inquiries concerning this matter should be directed to the undersigned at (571) 272-3232.

Derek L. Woods
Attorney/Advisor
Office of Petitions

---

of-time and fee, and no authorization to charge fees has been located among the application papers.

[2] If the appeal briefs are not copies of each other, Applicant must file his appeal brief in triplicate within two (2) months of the date of this Decision.

UNITED STATES PATENT AND TRADEMARK OFFICE

Commissioner for Patents
United States Patent and Trademark Office
P.O. Box 1450
Alexandria, VA 22313-1450
www.uspto.gov

THE GATES CORPORATION
IP LAW DEPT. 10-A3
1551 WEWATTA STREET
DENVER CO 80202

COPY MAILED

FEB 23 2006

OFFICE OF PETITIONS

In re Application of
Roger D. Stone
Application No. 09/877,617
Filed: June 8, 2001
Attorney Docket No.: 099-028A

ON PETITION

This is a decision on the petition filed January 17, 2006 under 37 CFR 1.137(b),[1] to revive the above-identified application.

The petition is **GRANTED**.

This application became abandoned for failure to timely reply to the non-Final Office Action mailed May 19, 2005. A shortened statutory period of three months was set for replying to the non-Final Office Action. No extensions of time having been requested, this application became abandoned August 22, 2005. Accordingly, a Notice of Abandonment was mailed December 15, 2005.

This matter is being referred to Technology Center 3747 for appropriate action on the amendment filed January 17, 2005.

Telephone inquiries concerning this matter should be directed to the undersigned Petitions Attorney at (571) 272-3212.

Patricia Faison-Ball
Senior Petitions Attorney
Office of Petitions

---

[1]Effective December 1, 1997, the provisions of 37 CFR 1.137(b) now provide that where the delay in reply was unintentional, a petition may be filed to revive an abandoned application or a lapsed patent pursuant to 37 CFR 1.137(b). A grantable petition filed under the provisions of 37 CFR 1.137(b) must be accompanied by:

(1) the required reply, unless previously filed. In a nonprovisional application abandoned for failure to prosecute, the required reply may be met by the filing of a continuing application. In a nonprovisional application filed on or after June 8, 1995, and abandoned for failure to prosecute, the required reply may also be met by the filing of a request for continued examination in compliance with § 1.114. In an application or patent, abandoned or lapsed for failure to pay the issue fee or any portion thereof, the required reply must be the payment of the issue fee or any outstanding balance thereof. In an application abandoned for failure to pay the publication fee, the required reply must include payment of the publication fee.

(2) the petition fee as set forth in 37 CFR 1.17(m);

(3) a statement that the entire delay in filing the required reply from the due date for the reply until the filing of a grantable petition pursuant to 37 CFR 1.137(b) was unintentional. The Commissioner may required additional information where there is a question whether the delay was unintentional; and

(4) any terminal disclaimer (and fee as set forth in 37 CFR 1.20(d)) required pursuant to 37 CFR 1.137(c)).

Under the Paperwork Reduction Act of 1995, no persons are required to respond to a collection of information unless it displays valid OMB control number.

PETITION TO ACCEPT UNINTENTIONALLY DELAYED PAYMENT OF MAINTENANCE FEE IN AN EXPIRED PATENT (37 CFR 1.378(c))

Patent Number	Issue Date (YYYY-MM-DD)	Application Number	Filing Date (YYYY-MM-DD)	Docket Number (if applicable)
6648114	2003-11-18	09/877,630	2001-06-08	M-222

CAUTION: Maintenance fee (and surcharge, if any) payment must correctly identify: (1) the patent number and (2) the application number of the actual U.S. application leading to issuance of that patent to ensure the fee(s) is/are associated with the correct patent. 37 CFR 1.366(c) and (d).

SMALL ENTITY
☒ Patentee claims, or has previously claimed, small entity status. See 37 CFR 1.27.

LOSS OF ENTITLEMENT TO SMALL ENTITY STATUS
☐ Patentee is no longer entitled to small entity status. See 37 CFR 1.27(g)

NOT Small Entity			Small Entity		
	Fee	Code		Fee	Code
○	3 ½ year	(1551)	◉	3 ½ year	(2551)
○	7 ½ year	(1552)	○	7 ½ year	(2552)
○	11 ½ year	(1553)	○	11 ½ year	(2553)

SURCHARGE
The surcharge required by 37 CFR 1.20(i)(2) (Fee Code 1558) must be paid as a condition of accepting unintentionally delayed payment of the maintenance fee.

MAINTENANCE FEE (37 CFR 1.20(e)-(g))
The appropriate maintenance fee must be submitted with this petition.

STATEMENT
THE UNDERSIGNED CERTIFIES THAT THE DELAY IN PAYMENT OF THE MAINTENANCE FEE TO THIS PATENT WAS UNINTENTIONAL

PETITIONER(S) REQUEST THAT THE DELAYED PAYMENT OF THE MAINTENANCE FEE BE ACCEPTED AND THE PATENT REINSTATED

THIS PORTION MUST BE COMPLETED BY THE SIGNATORY OR SIGNATORIES

37 CFR 1.378(d) states: "Any petition under this section must be signed by an attorney or agent registered to practice before the Patent and Trademark Office, or by the patentee, the assignee, or other party in interest."

I certify, in accordance with 37 CFR 1.4(d)(4) that I am

◉ An attorney or agent registered to practice before the Patent and Trademark Office

○ A sole patentee

○ A joint patentee; I certify that I am authorized to sign this submission on behalf of all the other patentees.

○ A joint patentee; all of whom are signing this e-petition

○ The assignee of record of the entire interest

Patent Practitioner			
A signature of the applicant or representative is required in accordance with 37 CFR 1.33 and 10.18. Please see 37 CFR 1.4(d) for the form of the signature			
Signature	/Victor F. Lohmann, III/	Date (YYYY-MM-DD)	
Name	Victor F. Lohmann, III	Registration Number	33951

This collection of information is required by 37 CFR 1.378(c). The information is required to obtain or retain a benefit by the public which is to file (and by the USPTO to process) an application. Confidentiality is governed by 35 U.S.C. 122 and 37 CFR 1.11 and 1.14. This collection is estimated to take 1 hour to complete, including gathering, preparing, and submitting the completed application form to the USPTO. Time will vary depending upon the individual case. Any comments on the amount of time you require to complete this form and/or suggestions for reducing this burden, should be sent to the Chief Information Officer, U.S. Patent and Trademark Office, U.S. Department of Commerce, P.O. Box 1450, Alexandria, VA 22313-1450. DO NOT SEND FEES OR COMPLETED FORMS TO THIS ADDRESS. **This form can only be used when in conjunction with EFS-Web. If this form is mailed to the USPTO, it may cause delays in reinstating the patent.**

Privacy Act Statement

The Privacy Act of 1974 (P.L. 93-579) requires that you be given certain information in connection with your submission of the attached form related to a patent application or patent. Accordingly, pursuant to the requirements of the Act, please be advised that: (1) the general authority for the collection of this information is 35 U.S.C. 2(b)(2); (2) furnishing of the information solicited is voluntary; and (3) the principal purpose for which the information is used by the U.S. Patent and Trademark Office is to process and/or examine your submission related to a patent application or patent. If you do not furnish the requested information, the U.S. Patent and Trademark Office may not be able to process and/or examine your submission, which may result in termination of proceedings or abandonment of the application or expiration of the patent.

The information provided by you in this form will be subject to the following routine uses:

1. The information on this form will be treated confidentially to the extent allowed under the Freedom of Information Act (5 U.S.C. 552) and the Privacy Act (5 U.S.C. 552a). Records from this system of records may be disclosed to the Department of Justice to determine whether the Freedom of Information Act requires disclosure of these record s.

2. A record from this system of records may be disclosed, as a routine use, in the course of presenting evidence to a court, magistrate, or administrative tribunal, including disclosures to opposing counsel in the course of settlement negotiations.

3. A record in this system of records may be disclosed, as a routine use, to a Member of Congress submitting a request involving an individual, to whom the record pertains, when the individual has requested assistance from the Member with respect to the subject matter of the record.

4. A record in this system of records may be disclosed, as a routine use, to a contractor of the Agency having need for the information in order to perform a contract. Recipients of information shall be required to comply with the requirements of the Privacy Act of 1974, as amended, pursuant to 5 U.S.C. 552a(m).

5. A record related to an International Application filed under the Patent Cooperation Treaty in this system of records may be disclosed, as a routine use, to the International Bureau of the World Intellectual Property Organization, pursuant to the Patent Cooperation Treaty.

6. A record in this system of records may be disclosed, as a routine use, to another federal agency for purposes of National Security review (35 U.S.C. 181) and for review pursuant to the Atomic Energy Act (42 U.S.C. 218(c)).

7. A record from this system of records may be disclosed, as a routine use, to the Administrator, General Services, or his/her designee, during an inspection of records conducted by GSA as part of that agency's responsibility to recommend improvements in records management practices and programs, under authority of 44 U.S.C. 2904 and 2906. Such disclosure shall be made in accordance with the GSA regulations governing inspection of records for this purpose, and any other relevant (i.e., GSA or Commerce) directive. Such disclosure shall not be used to make determinations about individuals.

8. A record from this system of records may be disclosed, as a routine use, to the public after either publication of the application pursuant to 35 U.S.C. 122(b) or issuance of a patent pursuant to 35 U.S.C. 151. Further, a record may be disclosed, subject to the limitations of 37 CFR 1.14, as a routine use, to the public if the record was filed in an application which became abandoned or in which the proceedings were terminated and which application is referenced by either a published application, an application open to public inspections or an issued patent.

9. A record from this system of records may be disclosed, as a routine use, to a Federal, State, or local law enforcement agency, if the USPTO becomes aware of a violation or potential violation of law or regulation.

UNITED STATES PATENT AND TRADEMARK OFFICE

Commissioner for Patents
United States Patent and Trademark Office
P.O. Box 1450
Alexandria, VA 22313-1450
www.uspto.gov

In re Patent No. 6648114
Issue Date: November 18,2003
Application No. 09877630
Filed: June 8,2001
Attorney Docket No. M-222

:
:DECISION GRANTING PETITION
:UNDER 37 CFR 1.378(c)
:

This is a decision on the electronic petition, filed July 21,2008 ,under 37 CFR 1.378(c) to accept the unintentionally delayed payment of the 3.5 year maintenance fee for the above-identified patent.

The petition is GRANTED.

The maintenance fee is accepted, and the above-identified patent reinstated as of July 21,2008 . This decision also constitutes notice that the fee has been accepted. An electronic copy of the petition and this decision has been created as an entry in an Image File Wrapper. Nevertheless, petitioner should print and retain an independent copy

Telephone inquires related to this electronic decision should be directed to the Electronic Business Center at 1-866-217-9197.

UNITED STATES PATENT AND TRADEMARK OFFICE

Commissioner for Patents
United States Patent and Trademark Office
P.O. Box 1450
Alexandria, VA 22313-1450
www.uspto.gov
DIW Sep-06

TRASK BRITT
P.O. BOX 2550
SALT LAKE CITY UT 84110

COPY MAILED

SEP 08 2006

OFFICE OF PETITIONS

In re Application of	:	
Herron et al.	:	DECISION ON PETITION TO
Application No. 09/877,635	:	WITHDRAW HOLDING OF
Filed: 8 June, 2001	:	ABANDONMENT
Atty Docket No. 3278.2US	:	

This is a decision on the petition filed on 17 October, 2005, to withdraw the holding of abandonment in the above-identified application.

The petition is **GRANTED**.

The application was held abandoned for failure to timely respond to the Notice of Non-Compliant Amendment (37 CFR 1.121) mailed on 25 January, 2005, which set a one (1) month shortened statutory period for reply. No extensions of the time for reply in accordance with 37 CFR 1.136(a) were obtained. Notice of Abandonment was mailed on 27 September, 2005.

Petitioners assert that the Office communication mailed on 25 January, 2005, was never received.

In the absence of any irregularity in the mailing of an Office communication, there is a strong presumption that the Office letter was properly mailed to practitioner at the address of record. This presumption may be overcome by a showing that the Office communication was not in fact received. The showing required to establish the failure to receive an Office communication must include a statement from the practitioner stating that the Office communication was not received by the practitioner and attesting to the fact that a search of the file jacket and docket records indicates that the Office action was not received. A copy of the docket record where the non-received Office action would have been entered had it been received and

docketed must be attached to and referenced in practitioner's statement. See "Withdrawing the Holding of Abandonment When Office Actions Are Not Received" 1156 Official Gazette 53 (November 16, 1993) and M.P.E.P. § 711.03(c). The showing outlined above may not be sufficient if there are circumstances that point to a conclusion that the Office communication may have been lost after receipt rather than a conclusion that the Office communication was lost in the mail.

A review of the record indicates that the Office action was properly mailed to the petitioners at the correspondence address of record at the time of mailing. Thus, there was no irregularity in mailing the Office action on the part of the United States Patent and Trademark Office.

In support of the petition, the petitioners have submitted a statement by the practitioner that the file jacket and docket records were searched, indicating a lack of receipt of the Office communication. A copy of petitioners' docket record is included with the petition and referenced therein.

The petitioner has made a sufficient showing of nonreceipt of the Office action. Accordingly, the holding of abandonment is withdrawn.

The application file is being referred to Technology Center 1600 technical support staff for remailing of the Notice mailed on 25 January, 2005. The period for reply will be reset from the mailing date thereof.

Telephone inquiries concerning this matter may be directed to the undersigned at (571)272-3231.

D Wood

Douglas I. Wood
Senior Petitions Attorney
Office of Petitions

UNITED STATES PATENT AND TRADEMARK OFFICE

Commissioner for Patents
United States Patent and Trademark Office
P.O. Box 1450
Alexandria, VA 22313-1450
www.uspto.gov

Paper No. 6

MATTHEW J. PEIRCE
1550 STARLIGHT CANYON AVENUE
LAS VEGAS NV 89123

FAX RECEIVED

MAY 25 2005

OFFICE OF PETITIONS

In re Application of :
Benitez-Vargas :
Application No. 09/877,641 :
Filed: June 8, 2001 :
Attorney Docket No. None :

ON PETITION

This is a decision on the petition under 37 CFR 1.137(b), filed December 30, 2004, to revive the above-identified application.

The petition is **DISMISSED**.

Any request for reconsideration of this decision must be submitted within TWO (2) MONTHS from the mail date of this decision. Extensions of time under 37 CFR 1.136(a) are permitted. The reconsideration request should include a cover letter entitled "Renewed Petition under 37 CFR 1.137(b)." This is **not** final agency action within the meaning of 5 U.S.C. § 704.

A grantable petition under 37 CFR 1.137(b)[1] must be accompanied by: (1) the required reply,[2] unless previously filed; (2) the petition fee as set forth in 37 CFR 1.17(m); (3) a statement that the entire delay in filing the required reply from the due date for the reply until the filing of a grantable petition pursuant to 37 CFR 1.137(b) was unintentional; and (4) any terminal disclaimer (and fee as set forth in 37 CFR 1.20(d)) required by 37 CFR 1.137(c). Where there is a question as to whether either the abandonment or the delay in filing a petition under 37 CFR 1.137 was unintentional, the Commissioner may require additional information. See MPEP 711.03(c)(III)(C) and (D). The instant petition lack(s) item(s) 2.

The current rate at the time of filing the instant petition is $750 instead of $665 that was submitted with the petition. Therefore, a total of **$85** ($750-$665) is required.

---

[1] As amended effective December 1, 1997. See Changes to Patent Practice and Procedure; Final Rule Notice, 62 Fed. Reg. 53131, 53194-95 (October 10, 1997), 1203 Off. Gaz. Pat. Office 63, 119-20 (October 21, 1997).

[2] In a nonprovisional application abandoned for failure to prosecute, the required reply may be met by the filing of a continuing application. In an application or patent, abandoned or lapsed for failure to pay the issue fee or any portion thereof, the required reply must be the payment of the issue fee or any outstanding balance thereof.

The file does not indicate a change of address has been submitted, although the address given on the petition differs from the address of record. If appropriate, a change of address should be filed in accordance with MPEP 601.03. A courtesy copy of this decision is being mailed to the address given on the petition; however, the Office will mail all future correspondence solely to the address of record.

Further correspondence with respect to this matter should be addressed as follows:

By mail: Mail Stop PETITIONS
Commissioner for Patents
Post Office Box 1450
Alexandria, VA 22313-1450

By hand: Customer Window located at:

Randolph Building
401 Dulany Street
Alexandria, VA 22314

By fax: (703) 872-9306
ATTN: Office of Petitions

Telephone inquiries concerning this decision should be directed to the undersigned at (571) 272-3208.

Karen Creasy

Karen Creasy
Petitions Examiner
Office of Petitions
Office of the Deputy Commissioner
for Patent Examination Policy

cc:
MATTHEW J. PEIRCE
330 S. 3RD ST. #1005
LAS VEGAS, NV 89101

UNITED STATES PATENT AND TRADEMARK OFFICE

Commissioner for Patents
United States Patent and Trademark Office
P.O. Box 1450
Alexandria, VA 22313-1450
www.uspto.gov

EMERY L. TRACY
P.O. BOX 1518
BOULDER CO 80306

COPY MAILED

JUL 20 2006

OFFICE OF PETITIONS

In re Application of :
Juan Luis Benitez-Vargas :
Application No. 09/877,641 : DECISION GRANTING PETITION
Filed: June 8, 2001 : UNDER 37 CFR 1.137(b)
For: COMMUNICATION SYSTEM :

This is a decision on the renewed petition under 37 CFR 1.137(b), filed July 26, 2005, to revive the above-identified application.

The petition is **GRANTED**.

The petition satisfies the conditions for revival pursuant to the provisions of 37 CFR 1.137(b) in that (1) the reply in the form of an (2) the petition fee; and (3) the required statement of unintentional delay have been received. Accordingly, the reply to the Notice To File Corrected Application Papers of August 8, 2001, is accepted as having been unintentionally delayed.

Telephone inquiries concerning this decision should be directed to the undersigned at (571) 272-3208.

This matter is being referred to the Office of Initial Patent Examination.

Karen Creasy

Karen Creasy
Petitions Examiner
Office of Petitions

UNITED STATES PATENT AND TRADEMARK OFFICE

COMMISSIONER FOR PATENTS
UNITED STATES PATENT AND TRADEMARK OFFICE
WASHINGTON, D.C. 20231
www.uspto.gov

Paper No. 15

Stevens F. Weinstock
Abbott Laboratories
100 Abbott Park Road
Dept. 377/AP6A
Abbott Park, IL 60064-6008

COPY MAILED

APR 0 8 2003

OFFICE OF PETITIONS

In re Application of :
Yihong Qiu, et al. :
Application No. 09/877,681 :
Filed: June 8, 2001 :
Attorney Docket No. 6437.US.P4 :

ON PETITION

This is a decision on the petition under 37 CFR 1.137(b), filed March 24, 2003, to revive the above-identified application.

The petition is **GRANTED**.

The above-identified application became abandoned for failure to reply in a timely manner to the Restriction Requirement mailed September 3, 2002, which set a shortened statutory period for reply of thirty (30) days. No extensions of time under the provisions of 37 CFR 1.136(a) were obtained. Accordingly, the above-identified application became abandoned on October 4, 2002.

37 CFR 1.137(b)(3) requires a statement that the entire delay in filing the required reply from the due date for the reply until the filing of a grantable petition pursuant to 37 CFR 1.137(b) was unintentional. If the statement contained in the instant petition varies from the language required by 37 CFR 1.137(b)(3), the statement contained in the instant petition is being construed as the statement required by 37 CFR 1.137(b)(3) and petitioner must notify the Office if this is **not** a correct interpretation of the statement contained in the instant petition.

Telephone inquiries concerning this decision should be directed to Cheryl Gibson-Baylor at (703)308-5111, or in her absence, Sherry D. Brinkley at (703)305-9220.

The application file is being forwarded to Technology Center 1600, Art Unit 1615.

Cheryl Gibson-Baylor
Petitions Examiner
Office of Petitions
Office of the Deputy Commissioner
for Patent Examination Policy

Sherry D. Brinkley
Petitions Examiner

UNITED STATES PATENT AND TRADEMARK OFFICE

Commissioner for Patents
United States Patent and Trademark Office
P.O. Box 1450
Alexandria, VA 22313-1450
www.uspto.gov

Robert Deberardine
Abbott Laboratories
100 Abbott Park Road
Dept. 377/AP6A
Abbott Park, IL 60064-6008

COPY MAILED

FEB 14 2008

In re Application of	:	
Yihong Qiu et al.	:	
Application No. 09/877,681	:	DECISION ON PETITION
Filed: June 8, 2001	:	
Attorney Docket No. 6437.US.P4	:	

This is a decision on the petition under the unintentional provisions of 37 CFR 1.137(b), filed December 21, 2007, to revive the above-identified application.

The petition is **GRANTED**.

The application became abandoned for failure to reply in a timely manner to the non-final Office action mailed June 23, 2006, which set a shortened statutory period for reply of three (3) months. No extensions of time under the provisions of 37 CFR 1.136(a) were obtained. Accordingly, the application became abandoned on September 26, 2006. The application became abandoned on September 23, 2006.

The petition satisfies the requirements of 37 CFR 1.137(b) in that petitioner has supplied (1) the reply in the form of an amendment after non-final, (2) the petition fee of $1540.00, and (3) a proper statement of unintentional delay.

37 CFR 1.137(b)(3) requires a statement that the entire delay in filing the required reply from the due date for the reply until the filing of a grantable petition pursuant to 37 CFR 1.137(b) was unintentional. Since the statement contained in the petition varies from the language required by 37 CFR 1.137(b)(3), the statement contained in the petition is being construed as the statement required by 37 CFR 1.137(b)(3). Petitioner must notify the Office if this is **not** a correct interpretation of the statement contained in the petition.

Telephone inquiries concerning this decision should be directed to Kimberly Inabinet at (571) 272-4618.

This application is being referred to Technology Center AU 1615 for appropriate action by the Examiner in the normal course of business on the reply received December 21, 2007.

Andrea Smith
Petitions Examiner
Office of Petitions

UNITED STATES PATENT AND TRADEMARK OFFICE

Commissioner for Patents
United States Patent and Trademark Office
P.O. Box 1450
Alexandria, VA 22313-1450
www.uspto.gov

Paper No. 11

ALISA A. HARBIN
CHIRON CORPORATION
4560 HORTON STREET M/S R-338
EMERYVILLE, CA 94608-2916

COPY MAILED

MAY 1 4 2004

OFFICE OF PETITIONS

In re Application of	:	
Maa et al.	:	
Application No. 09/877,726	:	ON PETITION
Filed: June 8, 2001	:	
Attorney Docket No. APF 39.20	:	

This is a decision on the petition under 37 C.F.R. § 1.137(b), filed May 6, 2004, to revive the above-identified application.

The petition is **GRANTED.**

The above-identified application became abandoned for failure to reply in a timely manner to the restriction requirement mailed September 23, 2002, which set a shortened statutory period for reply of one (1) month. No extensions of time under the provisions of 37 CFR 1.136(a) were obtained. Accordingly, the above-identified application became abandoned on October 24, 2002. A Notice of Abandonment was mailed on May 15, 2003.

Petitioner has met the requirements to revive the above-identified application pursuant to 37 CFR 1.137(b).

The file is now being forwarded to Technology Center 1600 for further examination on the merits.

Telephone inquiries should be directed to the undersigned at (703) 306-0482.

Liana Chase

Liana Chase
Petitions Examiner
Office of Petitions
Office of the Deputy Commissioner
for Patent Examination Policy

UNITED STATES PATENT AND TRADEMARK OFFICE

Commissioner for Patents
United States Patent and Trademark Office
P.O. Box 1450
Alexandria, VA 22313-1450
www.uspto.gov

COOLTv NETWORK.COM, INC.
17731 Northwest 14th Court
Miami FL 33169

COPY MAILED

DEC 13 2004

OFFICE OF PETITIONS

In re Application of
Wakefield
Application No. 09/877,729
Filed: June 8, 2001
Attorney Dck't. No. n/a

: ON PETITION

This is a decision on the communication filed November 10, 2004, which is being treated by the Office of Petitions solely to consider the request under 37 CFR 1.183 seeking suspension of the rules.

The petition under 37 CFR 1.183 is **dismissed**.

THE FEE EXTENDIBLE PERIOD FOR REPLY TO THE OUTSTANDING FINAL OFFICE ACTION OF OCTOBER 6, 2004, CONTINUES TO RUN FROM THAT DATE, WAS NOT TOLLED BY THE FILING OF THIS PETITION, see 37 CFR 1.181(f), AND IS NOT RESET BY THIS DECISION.

Petitioner, who is applicant now acting *pro se,* seeks tolling of all applicable dates for submission and fee payment pending disposition of a disciplinary matter apparently involving counsel(s) formerly of record. Petitioner includes a certification from the State of Florida Division of Administrative Hearings dated April 13, 2004, that certifies petitioner is an indigent such that he need not pay various costs in that department required by the state of Florida. Petitioner also requests that the $130 petition fee be refunded.

While petitioner seeks a blanket tolling of all applicable dates, petitioner appears to be unaware that most, if not all, dates that have been, may now, or will, be applicable to this applications are set by statute, and as such, the USPTO lacks the discretion or the authority to waive or "toll" such periods. 37 CFR 1.183 by its very language as quoted by petitioner expressly precludes from its aegis the waiver of any requirement of law. Even where the USPTO might have discretion with respect to a regulatory requirement not also expressly set forth in the patent statute, it would be necessary for petitioner to have shown (1) that this is an extraordinary situation where (2) justice requires waiver of the rule. In re Sivertz, 227 U.S.P.Q. 255, 256 (Comm'r Pat. 1985). Petitioner has not shown that either condition exists in this case. First, petitioner has not pointed to any specific regulatory period for which waiver is sought, and (2) petitioner has not shown any causal relationship between waiver of any unspecified period(s) and the "disciplinary matter" to which petitioner refers. Petitioner revoked on April 3, 2004, all previous powers of attorney and, in the absence of appointment of another registered practitioner, has himself now assumed the responsibility for further prosecution of this application, and the attendant risks arising from a failure to know and properly apply the patent statutes, the rules of practice, and the procedures before the USPTO.

The services of a registered attorney or agent are strongly recommended, especially in view of the complexities of the patent laws and regulations. The USPTO cannot prosecute this application on behalf of petitioner; *e.g.*, prepare a proper reply for

applicant. Likewise, the USPTO cannot recommend the services of a particular attorney or agent to the exclusion of any other. Petitioner may wish to consult his local telephone directory or can obtain a listing of registered practitioners in his area by accessing the USPTO web site at: www.uspto.gov, and then click on "Patents;" and on that page under the caption "Resources;" click on "Locate Registered Attorneys and Agents." Petitioner may also obtain general information from the Inventor's Assistance Center at 1-800-786-9199.

Further, as many of the fees that may now or soon will be applicable to this application at this stage of prosecution such as for example extension of time fees, Notice of Appeal Fee etc. are all a requirement of the patent statute, they cannot be waived. The payment of a statutorily required fee is obligatory upon the applicant and collection of the statutorily required fee is likewise obligatory upon the Office. Boyden v. Commissioner of Patents, 441 F.2d 1041, 1043, 168 USPQ 680, 681 (D.C. Cir.), *cert denied* 404 US 842, 868, 171 USPQ 312 (1971); see also Giuliani v. United States, 8 USPQ2d 1095 (D. Hi 1988), *aff'd mem.*, 878 F.2d 1444 (Fed. Cir. 1989). The USPTO has no discretion to proceed in the absence of such statutorily required payments, and also lacks authority to permit a party to proceed *in forma pauperis* before it. Boyden, supra. Since 37 CFR 1.183, by its terms may not be invoked contrary to the statute, the requested relief from any applicable fees cannot be favorably considered.

As the fee was required for consideration of the petition, the fee is not refundable upon the rendering of the decision, regardless of the outcome of the decision. Ex parte VENTURA CITRUS ASSOCIATION, 71 USPQ 103, 104 (Comm'r Pat. 1946).

Lastly, it is noted that the instant communication was improperly captioned by applicant for more than one area of the USPTO *i.e*, the Office of Petitions and OED. However, these are separate areas of the USPTO and treat different matters. Accordingly, 37 CFR 1.4(c) requires that applicant have filed two separate communications each separately captioned for the proper area. The Office of Petitions has treated the petition as a matter under its jurisdiction but has no jurisdiction of matters before OED. Further, OED cannot decide petitions, which is a matter for this office. Petitioner is also reminded that, pursuant to 37 CFR 1.1(a)(3)(ii)communications related to disciplinary proceedings are not properly mailed to the same address as for correspondence directed to patent applications. Accordingly, should petitioner wish any non petitionable matter mentioned in the instant communication considered by OED, it should be sent in a separate communication addressed to, and captioned for, OED at the USPTO address noted above.

Telephone inquiries relative to this decision only should be directed to the undersigned at (703) 305-1820.

Brian Hearn

Brian Hearn
Petitions Examiner
Office of Petitions
Office of the Deputy Commissioner
for Patent Examination Policy

UNITED STATES PATENT AND TRADEMARK OFFICE

Commissioner for Patents
United States Patent and Trademark Office
P.O. Box 1450
Alexandria, VA 22313-1450
www.uspto.gov

COOLTvNETWORK.CON, INC.
17731 Northwest 14th Court
Miami, Florida 33169

MAIL

AUG 1 2 2005

DIRECTOR OFFICE
TECHNOLOGY CENTER 2100

In re Application of: Franz Wakefield	)	
Application No.: 09/877,729	)	**DECISION ON PETITION**
Filed: June 8, 2001	)	**UNDER 37 C.F.R. § 1.181 TO**
For: METHOD AND SYSTEM FOR	)	**WITHDRAW HOLDING OF**
CREATING, USING AND	)	**ABANDONMENT, TO**
MODIFYING MULTIFUNCTIONAL	)	**REFUND FEES, AND FOR**
WEBSITE HOT SPOTS	)	**NOTICE OF ALLOWANCE**

This is a decision on the petition filed May 14, 2005 under 37 CFR § 1.181 to rescind an abandonment and grant additional relief. The petition is being treated as a request to withdraw the holding of abandonment[1] in the above captioned case.

The petition is **DENIED.**

RECENT CASE HISTORY

January 30, 2004	-	Rejection mailed. Claims 1, 2, 5, 6, 8, 11-15, 19 and 20 are rejected under 35 U.S.C. §102(e) as anticipated by Horowitz et al.; Claims 3, 4, 7, 9, 10, and 16-18 are rejected under 35 U.S.C. §103(a) over Horowitz in view of various other references.
April 14, 2004	-	Applicant dismisses attorney and takes over prosecution of the application *pro-se.*
April 14, 2004	-	Interview Summary. Applicant and Examiner discuss using 37 C.F.R. §1.131 practice to antedate the Horowitz reference. (Mailed May 4, 2004)
April 26, 2004	-	Applicant files response to Office Action of January 30, 2004. Response includes affidavit of Matthew B. Hinze.

[1] A petition under to revive 1.137(b) accompanied by an RCE and the appropriate fees was filed on May 10, 2005. Because withdrawal of the holding of abandonment would make the petition to revive unnecessary this petition (filed May 14) will be treated first.

May 10, 2004	-	Applicant files further response to Office Action of January 30, 2004. Response includes affidavit of inventor Franz A. Wakefield and Applicants record of the April 19, 2004 Interview.
June 16, 2004	-	Notice of Non-Compliant Amendment Mailed (with respect to the May 10, 2004 amendment)
June 21,2004	-	Applicant submits a compliant response.
October 1, 2004	-	Examiner issues a Final rejection. The Office action maintains the art rejections and responds in detail as to the deficiencies in Applicant's attempted showing of priority.
October 21, 2004	-	Interview Summary detailing a 2 hour conversation between Applicant and Examiner regarding the deficiencies in the affidavit
November 10, 2004	-	Applicant Petitions for suspension of time periods and patent fees.
December 13, 2004	-	Petition is Dismissed
January 7, 2005	-	Response to Final Rejection filed. This response includes an Affidavit under 37 C.F.R. §1.131 of approximately 310 pages including exhibits and attachments.
February 24, 2005	-	Affidavit of Mr. Stephen A. Benedict filed.
March 21, 2005	-	Advisory action mailed informing Applicant that in accordance with 37 C.F.R. §1.116(e) the affidavit would not be entered at this time.
April 25, 2005	-	Interview with SPE explaining why Advisory action was issued. (Mailed May 2, 2005)
May 2, 2005	-	Interview Summary mailed memorializing April 26, 2005 interview with SPRE Brian Johnson and Conversations with SPRE Pinchus Laufer regarding details of Affidavit practice, Office practice and procedure, and the relationship between the Constitution, Statute, regulations, and administrative procedure.
May 3, 2005	-	Notice of Abandonment mailed.
May 10, 2005	-	Petition under 1.137 filed.

May 14, 2005 - The instant petition for review is filed.

BASIS OF OPINION

The relevant portions of the Statutes and Rules are reproduced below. Emphasis is added to draw attention to the critical phrases.

35 U.S.C. 133 Time for prosecuting application

Upon failure of the applicant to prosecute the application ***within six months*** after any action therein, of which notice has been given or mailed to the applicant, or within such shorter time, not less than thirty days, as fixed by the Commissioner in such action, the application shall be regarded as abandoned by the parties thereto, unless it be shown to the satisfaction of the Commissioner that such delay was unavoidable.

35 U.S.C. 134 Time period for reply to an Office action

An Office action will notify the applicant of any non-statutory or shortened statutory time period set for reply to an Office action. Unless the applicant is notified in writing that a reply is required in less than six months, a maximum period of six months is allowed.

37 CFR § 1.135 Abandonment for failure to respond within time period.

(a) If an applicant of a patent application fails to respond within the time period provided under § 1.134 and § 1.136, the application will become abandoned ***unless an Office action indicates otherwise.***

(b) Prosecution of an application to save it from abandonment pursuant to paragraph (a) of this section must include such complete and proper action as the condition of the case may require. The admission of, or refusal to admit, any amendment after final rejection or any amendment not responsive to the last action, or any related proceedings, ***will not operate to save the application from abandonment.***

37 CFR § 1.113 Final rejection or action.

(a) On the second or any subsequent examination or consideration by the examiner the rejection or other action may be made final, whereupon applicant's, or for *ex parte* reexaminations filed under §1.510, patent owner's reply is limited to appeal in the case of rejection of any claim (§41.31 of this title), or to amendment as specified in §1.114 or §1.116. Petition may be taken to the Director in the case of objections or requirements not involved in the rejection of any claim (§1.181). ***Reply to a final rejection or action must comply with §1.114 or paragraph (c) of this section.*** For final actions in an *inter partes* reexamination filed under §1.913, see §1.953.

(c) Reply to a final rejection or action ***must include cancellation of, or appeal from the rejection of, each rejected claim***. If any claim stands allowed, the reply to a final rejection or action must comply with any requirements or objections as to form.

37 CFR § 1.116 Amendments after final action or appeal.

(a) An amendment after final action must comply with §1.114 or this section.

(c) ***The admission of, or refusal to admit***, any amendment after a final rejection, a final action, an action closing prosecution, or any related proceedings ***will not operate to relieve the application*** or reexamination proceeding from its condition as subject to appeal or to save the application ***from abandonment under §1.135***, or the reexamination prosecution from termination under §1.550(d) or §1.957(b) or limitation of further prosecution under §1.957(c).

(e) An affidavit or other evidence submitted after a final rejection or other final action (§1.113) in an application or in an *ex parte* reexamination filed under §1.510, or an action closing prosecution (§1.949) in an *inter partes* reexamination filed under §1.913 but before or on the same date of filing an appeal (§41.31 or §41.61 of this title), may be admitted upon a showing of good and sufficient reasons why the affidavit or other evidence is necessary and was not earlier presented.

37 CFR § 1.181 Petition to the Commissioner.

(f) Except as otherwise provided in these rules, any such petition not filed within 2 months from the action complained of, may be dismissed as untimely. ***The mere filing of a petition will not*** stay the period for reply to an Examiner's action which may be running against an application, nor ***act as a stay of other proceedings***.

37 CFR § 1.26 Refunds.

(a) ***The Commissioner may refund any fee paid by mistake or in excess of that required.*** A change of purpose after the payment of a fee, such as when a party desires to withdraw a patent or trademark filing for which the fee was paid, including an application, an appeal, or a request for an oral hearing, will not entitle a party to a refund of such fee. The Office will not refund amounts of twenty-five dollars or less unless a refund is specifically requested, and will not notify the payor of such amounts. If a party paying a fee or requesting a refund does not provide the banking information necessary for making refunds by electronic funds transfer (31 U.S.C. 3332 and 31 CFR part 208), or instruct the Office that refunds are to be credited to a deposit account, the Commissioner may require such information, or use the banking information on the payment instrument to make a refund. Any refund of a fee paid by credit card will be by a credit to the credit card account to which the fee was charged.

MPEP 706.07 (f) Time to Reply to Final rejection

(O) If prosecution is to be reopened after a final Office action has been replied to, the finality of the previous Office action ***should be withdrawn to avoid the issue of abandonment*** and the payment of extension fees. For example, if a new reference comes to the attention of the

examiner which renders unpatentable a claim indicated to be allowable, the Office action should begin with a statement to the effect: The finality of the Office action mailed is hereby withdrawn in view of the new ground of rejection set forth below. Form Paragraph 7.42 could be used in addition to this statement.

MPEP 1206 Time for Filing Appeal Brief

37 CFR 1.192(a) provides 2 months from the date of the Notice of Appeal for the appellant to file an appeal brief... The usual period of time in which appellant must file his or her brief is 2 months from the date of appeal. The Office date of receipt of the Notice of Appeal (and not the date indicated on any certificate of Mailing under 37 CFR 1.8) is the date from which this 2 month time period is measured. See MPEP § 512... In the event that the appellant finds that he or she is unable to file a brief within the time period allotted by the rules, he or she may file a petition, with fee, to the examining group, requesting additional time under 37 CFR 1.136(a). ***Additional time in excess of 5 months will not be granted*** unless extraordinary circumstances are involved under 37 CFR 1.136(b).

MPEP 715.09 Seasonable Presentation

Affidavits or declarations under 37 CFR 1.131 must be timely presented in order to be admitted. Affidavits and declarations submitted under 37 CFR 1.131 and other evidence traversing rejections are considered timely if submitted:

(A) prior to a final rejection;
(B) before appeal in an application not having a final rejection; or
(C) after final rejection and submitted
  (1) with a first reply after final rejection for the purpose of overcoming a new ground of rejection or requirement made in the final rejection, or
  (2) with a satisfactory showing under 37 CFR 1.116(b) or 37 CFR 1.195, or
  (3) under 37 CFR 1.129(a).

All admitted affidavits and declarations are acknowledged and commented upon by the examiner in his or her next succeeding action.

RELIEF REQUESTED

Petitioner requests[2] that

(1) the holding of abandonment be rescinded;

(2) the fees for the Petition to revive and the accompanying RCE be refunded;

(3) Entry of the January 7, 2005 Affidavit; and

(4) Issuance of a Notice of allowance.

---

[2] The order and wording of the request is modified.

DECISION

(1) Request to rescind the abandonment

In support of the petition, Petitioner provides a "Statement of Uncontroverted Facts". This statement concedes that a proper Final rejection was mailed October 6, 2004. Applicant filed an response to the final rejection including an Affidavit on January 7, 2005.

However, the timely filing of a Response to the Final Rejection is not relevant to the abandonment because 37 CFR §§ 1.113, 1.116, 1.135 and 1.181, and the portion of MPEP 706.07(f) reproduced above make it clear that without a specific withdrawal of the Final Rejection the application will go abandoned without timely action on the part of Petitioner. In fact, Applicant was advised of the non-entry of the affidavit and that the application was not in condition for allowance by the Office mailing of March 21, 2005.

Based on the statutes, rules, and sections of the MPEP reproduced above, the period for the petitioner to file a either a Notice of Appeal or an RCE (under 37 C.F.R. §1.114) expired on April 6, 2005 (i.e., six months from the date the Final Office action was mailed). Applicant makes no representation that a Notice of Appeal or an RCE was filed which would have prevented abandonment at the expiration of the six month period; therefore, the application is ***abandoned in fact***. Under these circumstances, petition under 1.181(a) is not appropriate.

MPEP 711.03(c) explains:

> A petition to revive an abandoned application (discussed below) should not be confused with a petition from an examiner's holding of abandonment. Where an applicant contends that the application is not in fact abandoned (e.g., there is disagreement as to the sufficiency of the reply, or as to controlling dates), a petition under 37 CFR 1.181(a) requesting withdrawal of the holding of abandonment is the appropriate course of action, and such petition does not require a fee.
>
> Where **there is no dispute as to whether an application is abandoned** (e.g., the applicant's contentions merely involve the cause of abandonment), a petition under 37 CFR 1.137 (accompanied by the appropriate petition fee) is necessary to revive the abandoned application.

The request to rescind the abandonment is **DENIED**.

(2) Request to refund the fees for the petition under 37 C.F.R. §1.137 and for the RCE

Because the abandonment is held to be proper and is not withdrawn, the petition for revival and the RCE are necessary to reinstate the application from abandoned to pending status. Therefore, the fee paid was not a mistake (a fee paid when no fee is required) in accordance with 37 C.F.R. 1.26(a). The

fee of $750.00 paid by Applicant for a petition under 37 C.F.R. 1.137(b) and the fee of $395.00 for the RCE was the proper small entity fee at the time the fee was paid. Therefore, the fee paid was not in excess of the amount of fee that was required. See also MPEP §607.02. Since the fee paid was not a mistake or in excess of the required amount, the request for a refund does not fit under the categories of reasons for the Office to grant a refund as set forth in 37 C.F.R. 1.26(a) and the fee should not be refunded in accordance with the provisions of 37 C.F.R. 1.26(a).

The request to refund the fees is **DENIED**.

(3) Request to have the January 7, 2005 affidavit and accompanying evidence entered

On January 7, 2005, Applicant filed an Affidavit in response to the Final Office action of October 6, 2004. The Examiner, citing 37 C.F.R. §1.116(e) refused entry to the new evidence. The undersigned notes that the affidavit will be entered as part of the filing of the RCE. Presumably, Applicant is requesting that the evidence be entered without Applicant filing an RCE.

Both MPEP 715.09 and 37 C.F.R. §1.116(e) support the Examiner's refusal to enter the affidavit in this instance. Applicant was aware of the Horowitz reference as of the issuance of the first office action; the affidavit was not in response to a new ground of rejection in the final; and there is no good and sufficient reason why this evidence was not presented earlier. Therefore, the Examiner properly refused entry.

Applicant is reminded that entry of amendments or evidence after a final rejection is not a matter of right. Generally, where the filing requires more than cursory review by the Examiner it will not be entered after a final rejection.

Insofar, as applicant challenges the Examiner's action in not entering the affidavit prior to the filing of an RCE, the Examiner's action is upheld.

The request to have the Affidavit entered without an RCE is **DENIED**.

Applicant is reminded that the Affidavit will be entered upon a granting of a petition to revive under 37 CFR §1.137.

(4) Issuance of a Notice of Allowance

Applicant requests that a Notice of allowance be issued in the application. The undersigned notes that a Notice of allowance can only be issued after a determination is made that all claims remaining in the application are patentable. At this stage of the prosecution, all claims are under rejection.

Furthermore, as a procedural matter, petitions on appealable matters ordinarily are not entertained. (See MPEP §1002). As stated in MPEP § 1201:

> The line of demarcation between appealable matters for the Board of Patent Appeals and Interferences (Board) and petitionable matters for the Commissioner of Patents and Trademarks should be carefully observed. The Board will not ordinarily hear a question which it believes should be decided by the Commissioner, and the Commissioner will not ordinarily entertain a petition where the question presented is an appealable matter.

Issuance of a Notice of Allowance would require a determination as to the validity of the rejections of record. Review of rejections are appealable matters within the purview of the BPAI.

Accordingly, the request for a Notice of Allowance is **DENIED**.

CONCLUSION

The requests for relief are **DENIED**.

The application is being forwarded to the Office of Petitions for treatment of the Petition under 37 CFR §1.137(b) filed on May 10, 2005.

Paul Sewell, Director (Acting)
Technology Center 2100
Computer Architecture, Software, and Information Security

UNITED STATES PATENT AND TRADEMARK OFFICE

COMMISSIONER FOR PATENTS
UNITED STATES PATENT AND TRADEMARK OFFICE
P.O. BOX 1450
ALEXANDRIA, VA 22313-1450
www.uspto.gov

COPY MAILED

AUG 17 2005

OFFICE OF PETITIONS

COOLTv NETWORK.COM, INC.
17731 Northwest 14th Court
Miami, FL 33169

In re Application of :
Franz Wakefield :
Application No. 09/877,729 : ON PETITION
Filed: June 8, 2000 :
Attorney Docket No. 4551.002 :

This is a decision on the petition under 37 CFR 1.137(b), filed May 10, 2005, to revive the above-identified application.

This application became abandoned for failure to timely reply to a final Office action mailed October 6, 2004. A Notice of Abandonment was mailed on May 3, 2005. In response, on May 10, 2005, the present petition was filed.

The petition is **GRANTED**.

The application is revived for consideration of a submission under 37 CFR 1.114 (request for continued examination).

Telephone inquiries concerning this decision should be directed to the undersigned at (571) 272-3204.

The application file is being referred to Technology Center AU 2174 for further processing of the request for continued examination under 37 CFR 1.114 filed May 10, 2005.

Sherry D. Brinkley
Petitions Examiner
Office of Petitions
Office of the Deputy Commissioner
for Patent Examination Policy

UNITED STATES PATENT AND TRADEMARK OFFICE

COMMISSIONER FOR PATENTS
UNITED STATES PATENT AND TRADEMARK OFFICE
WASHINGTON, D.C. 20231
www.uspto.gov

Paper No. 10

KERRY O'BRIEN
3/15 ST JOHNS WOOD RD.
BLAIRGOWRIE
VICTORIA 3942
AUSTRALIA

COPY MAILED

MAY 01 2003

OFFICE OF PETITIONS

In re Application of :
O'Brien :
Application No. 09/877,739 :
Filed: June 8, 2001 :
For: LUMBAR SUPPORT AND COMFORT :
FEEL ADJUSTMENT DEVICE :

ON PETITION

This is a decision on the petition under 37 CFR 1.181, filed April 28, 2003, to withdraw the holding of abandonment.

The petition is **dismissed.**

The petition would be normally be granted. However, the petition cannot be granted because the petition is not signed. A signed copy of the petition should be mailed or sent by facsimile transmission to the Office.

Attached is a copy of the September 13, 2002 Office action. Petitioner may wish to file a reply to the Office action with the signed copy of the petition.

During a previous phone call, petitioner requested his address be changed to a post office box to improve the chances of prompt receipt of mail. In order to make the change, the Office needs the request to be made in writing and signed. The request can be as simple as, "Please mail all future correspondence to ...." Since the current petition does not list the new address and since the petition is not signed, the Office cannot change the address at this time.

Any request for reconsideration must be submitted within TWO (2) MONTHS from the mail date of this decision. No further petition fee is required for the request. The reconsideration request should include a cover letter entitled "Renewed Petition To Withdraw the Holding of Abandonment." This is **not** final agency action within the meaning of 5 U.S.C. § 704.

Further correspondence with respect to this matter should be addressed as follows:

By mail: Mail Stop Petition
Commissioner for Patents
P.O. Box 1450
Alexandria, VA 22313-1450

By facsimile: (703) 308-6916
Attn: Office of Petitions

Telephone inquiries should be directed to Petitions Attorney Steven Brantley at (703) 306-5683.

Charles Steven Brantley
Petitions Attorney
Office of Petitions

Attached: Copy of September 13, 2003 Office action

UNITED STATES PATENT AND TRADEMARK OFFICE

COMMISSIONER FOR PATENTS
UNITED STATES PATENT AND TRADEMARK OFFICE
P.O. BOX 1450
ALEXANDRIA, VA 22313-1450
www.uspto.gov

Paper No. 12

KERRY O'BRIEN
PO BOX 119
BLAIRGOWRIE
VICTORIA 3942
AUSTRALIA

COPY MAILED

MAY 19 2003

OFFICE OF PETITIONS

In re Application of :
O'Brien :
Application No. 09/877,739 :
Filed: June 8, 2001 :
For: LUMBAR SUPPORT AND COMFORT :
FEEL ADJUSTMENT DEVICE :

ON PETITION

This is a decision on the renewed petition under 37 CFR 1.181, filed May 14, 2003, to withdraw the holding of abandonment.

The petition is **granted.**

The above-identified application became abandoned for failure to reply in a timely manner to the non-final Office action mailed September 13, 2002, which set a shortened statutory period for reply of one (1) month or thirty (30) days (whichever is later). No extensions of time under the provisions of 37 CFR 1.136(a) were obtained. Accordingly, the above-identified application became abandoned on October 14, 2002.

Petitioner contends, and has proven, the September 13, 2002 Office action was never received.

The Notice of Abandonment is hereby vacated and the holding of abandonment withdrawn.

The September 13, 2002 Office action is vacated and a new copy of the Office action will be mailed to petitioner.

The file is being forwarded to Technology Center 3600 to remail the September 13, 2002 Office action and to set a new time period for reply from the mailing date thereof.

Telephone inquiries should be directed to Petitions Attorney Steven Brantley at (703) 306-5683.

Charles Steven Brantley
Petitions Attorney
Office of Petitions

UNITED STATES PATENT AND TRADEMARK OFFICE

COMMISSIONER FOR PATENTS
UNITED STATES PATENT AND TRADEMARK OFFICE
P.O. BOX 1450
ALEXANDRIA, VA 22313-1450
www.uspto.gov

Paper No. 19

Kerry O'Brien
PO Box 119
Blairgowrie
Victoria 3942
AUSTRALIA

COPY MAILED

FEB 1 8 2004

OFFICE OF PETITIONS

In re Application of :
O'Brien :
Application No. 09/877,739 : ON PETITION
Filed: June 8, 2001 :
For: LUMBAR SUPPORT AND COMFORT :
FEEL ADJUSTMENT DEVICE :

This is a decision on the petition under 37 CFR 1.137(a), filed January 16, 2004, to revive the above-identified application.

Since the petition fee has not been paid, the petition under 37 CFR 1.137(a) must be **DISMISSED**.

Below, please find a summary of the facts and a discussion of your current options. Please feel free to call if you have any questions after reading the instant decision.

An Office action was mailed on June 20, 2003, which gave petitioner an extendable One Month time period to file a response.

Office records do not indicate a proper response was filed within one month. Although a response was filed within the extendable time period, the response was not accompanied by payment for an extension of time. It is now too late to pay for an extension of time. The application is considered abandoned as of July 21, 2003.

Three possible options exist if petitioner wishes to continue to prosecute the instant application:
(1) File a petition to withdraw the holding of abandonment,
(2) File a petition under 37 CFR 1.137(a), or
(3) File a petition under 37 CFR 1.137(b).

As to (1), a petition to withdraw the holding of abandonment might be appropriate if the Office action was never received. Such a petition *might* also be appropriate if the Office action was received on or after October 1, 2003. A fee is unnecessary for this type of petition. If petitioner chooses this option, a full explanation of the facts should be supplied. If additional facts are necessary, a decision dismissing the petition and requesting the additional facts will be mailed from the Office to petitioner.

If the Office action was never received, petitioner may wish to consider changes which might decrease the chance of loss for future papers. For example, the address at the top of the December 3, 2003 facsimile transmission mentions "St. Johns Wood Road." Is there another address to which mail might be sent? Are there changes to how the address is phrased which might decrease chance of loss?

As to (2), a petition under 37 CFR 1.137(a) would require the submission of $55 AND proof that the entire delay in the filing the submission and a grantable petition was unavoidable. Petitioner would need to show that he treated the application the same as a reasonable and prudent person, with knowledge of patent rules and procedures, would treat his or her most important business. If necessary, a more elaborate discussion of 37 CFR 1.137(a) can be supplied in the future. However, if petitioner received the Office action and waited until December to reply and was unaware that the rules required payment for an extension of time, then the delay would probably not be found to be unavoidable.

As to (3), a petition under 37 CFR 1.137(b) would require the submission of $665 and the completion of the petition form. A petition under 37 CFR 1.137(b) is the simplest petition. However, such a petition also has the highest cost.

In summary, if the Office action was never received, a petition to withdraw the holding of abandonment should be filed. If it was received, a petition under 37 CFR 1.137(b) would probably be the best response.

Whatever choice is made, the petition should be filed within 3 months of the mailing date of this decision.

Further correspondence with respect to this matter should be addressed as follows:

By mail: Mail Stop Petition
Commissioner for Patents
P.O. Box 1450
Alexandria, VA 22313-1450

By facsimile: (703) 872-9306
Attn: Office of Petitions

If a request for reconsideration is filed, and a decision on the new petition is not received within three months, petitioner may wish to call the number below to check on the status of the renewed petition.

Telephone inquiries should be directed to Petitions Attorney Steven Brantley at (703) 306-5683.

Charles Steven Brantley
Petitions Attorney
Office of Petitions

Attached: Copy of Office action mailed on June 20, 2003
Form for petition under 37 CFR 1.137(a)
Form for petition under 37 CFR 1.137(b)

UNITED STATES PATENT AND TRADEMARK OFFICE

COMMISSIONER FOR PATENTS
UNITED STATES PATENT AND TRADEMARK OFFICE
P.O. BOX 1450
ALEXANDRIA, VA 22313-1450
www.uspto.gov

Paper No. 22

Kerry O'Brien
PO Box 119
Blairgowrie
Victoria 3942
AUSTRALIA

COPY MAILED

APR 1 5 2004

OFFICE OF PETITIONS

ON PETITION

In re Application of :
O'Brien :
Application No. 09/877,739 :
Filed: June 8, 2001 :
For: LUMBAR SUPPORT AND COMFORT :
FEEL ADJUSTMENT DEVICE :

This is a decision on the petition under 37 CFR 1.137(b), filed March 24, 2004, to revive the above-identified application.

The petition is **granted.**

An Office action was mailed on June 20, 2003, which gave petitioner an extendable One Month time period to file a response. Office records do not indicate a proper response was filed within one month. Although a response was filed within the extendable time period, the response was not accompanied by payment for an extension of time. Accordingly, the application became abandoned as of July 21, 2003.

The instant petition requests revival of the application. Petitioner has met the requirements to revive the above-identified application pursuant to 37 CFR 1.137(b). Therefore, the petition is granted and the application is revived.

The file is now being forwarded to Technology Center 3600.

Telephone inquiries should be directed to Petitions Attorney Steven Brantley at (703) 306-5683.

Charles Steven Brantley
Petitions Attorney
Office of Petitions

SPE E. Kim

SPE RESPONSE FOR CERTIFICATE OF CORRECTION

Paper No.: _____

DATE : 5/15/06

TO SPE OF : ART UNIT 3711

SUBJECT : Request for Certificate of Correction for Appl. No.: 09/877,741 Patent No.: 7033181

Please respond to this request for a certificate of correction within 7 days.

Please review the requested changes/corrections as shown in the **COCIN** document(s) in the IFW application image. No new matter should be introduced, nor should the scope or meaning of the claims be changed.

Please complete the response (see below) and forward the completed response to scanning using document code **COCX**.

Lamonte M. Newsome
Certificates of Correction Branch
703-308-9390 ext. 112

Thank You For Your Assistance

The request for issuing the above-identified correction(s) is hereby:

Note your decision on the appropriate box.

- ☒ **Approved** — **All** changes apply.
- ☐ **Approved in Part** — Specify below which changes **do not** apply.
- ☐ **Denied** — State the reasons for denial below.

Comments: _____

EUGENE KIM
SUPERVISORY PATENT EXAMINER

SPE — 3711 **Art Unit**

UNITED STATES PATENT AND TRADEMARK OFFICE

Commissioner for Patents
United States Patent and Trademark Office
P.O. Box 1450
Alexandria, VA 22313-1450
www.uspto.gov

MAINE & ASMUS
100 MAIN STREET
P O BOX 3445
NASHUA, NH 03061-3445

COPY MAILED

APR 1 1 2005

OFFICE OF PETITIONS

In re Application of :
Elizabeth Varriano-Marston et al :
Application No. 09/877,757 :
Filed: June 8, 2001 :
Attorney Docket No. MARS93-DIV :

ON PETITION

This is a decision on the petition under 37 CFR 1.313, filed April 6, 2005, which is being treated under 37 CFR 1.313(c)(2) to withdraw the above-identified application from issue after payment of the issue fee.

The petition is **GRANTED**.

The above-identified application is withdrawn from issue for consideration of a submission under 37 CFR 1.114 (request for continued examination). See 37 CFR 1.313(c)(2).

Petitioner is advised that the issue fee paid on March 15, 2005 in the above-identified application cannot be refunded. If, however, the above-identified application is again allowed, petitioner may request that it be applied towards the issue fee required by the new Notice of Allowance.[1]

Telephone inquiries should be directed to Wan Laymon at (571) 272-3220.

This matter is being referred to Technology Center AU 1772 for processing of the request for continued examination under 37 CFR 1.114.

Wan Laymon
Wan Laymon
Petitions Examiner
Office of Petitions
Office of the Deputy Commissioner
for Patent Examination Policy

---

[1] The request to apply the issue fee to the new Notice may be satisfied by completing and returning the new Issue Fee Transmittal Form PTOL-85(b), which includes the following language thereon: "Commissioner for Patents is requested to apply the Issue Fee and Publication Fee (if any) or re-apply any previously paid issue fee to the application identified above." Petitioner is advised that, whether a fee is indicated as being due or not, the Issue Fee Transmittal Form **must** be completed and timely submitted to avoid abandonment. Note the language in bold text on the first page of the Notice of Allowance and Fee(s) Due (PTOL-85).

UNITED STATES PATENT AND TRADEMARK OFFICE

Commissioner for Patents
United States Patent and Trademark Office
P.O. Box 1450
Alexandria, VA 22313-1450
www.uspto.gov

MAIL

OCT 1 5 2004

DIRECTOR OFFICE
TECHNOLOGY CENTER 2100

Fernandez & Associates, LLP
Patent Attorneys
P.O. Box D
Menlo Park, CA 94026-6402

In re Application of:
Jonathan SALAS, et al.
Application No. 09/877,761
Filed: June 8, 2001
For: SYSTEM AND METHOD FOR DYNAMIC CONTENT ACTIVATION

DECISION ON REQUEST TO WITHDRAW AS ATTORNEY OR AGENT

This is a decision on the Request(s) to Withdraw from Representation filed December 1, 2003 and July 30, 2004.

A grantable request to withdraw as attorney of record should indicate thereon the present mailing addresses of the attorney(s) who is/are withdrawing from the record and of the applicant. The request for withdrawal must be signed by every attorney seeking to withdraw or contain a clear indication that one attorney is signing on behalf of another/others. A request to withdraw will not be approved unless at least 30 (thirty) days would remain between the date of approval and the later of the expiration date of a time to file a response or the expiration date of the maximum time period which can be extended under 37 C.F.R. § 1.136(a). The effective date of withdrawal being the date of decision and not the date of request. See M.P.E.P. § 402.06. 37 C.F.R. § 1.36 further requires that the applicant or patent owner be notified of the withdrawal of the attorney or agent.

The request is **GRANTED**.

All future communications from the Office will be directed to the below-listed address until otherwise notified by applicant. This correspondence address is provided by the withdrawn attorney(s). Applicant is reminded of the obligation to promptly notify the Patent and Trademark Office (Office) of any change in correspondence address to ensure receipt of all communications from the Office.

For Vincent N. Trans
Special Program Examiner
Technology Center 2100
Computer Architecture, Software, and
Information Security
703-305-9750

cc: John J. Bruckner PC
5708 Back Bay Lane
Austin, TX 78739-1723

SPE RESPONSE FOR CERTIFICATE OF CORRECTION

Paper No.: ~~9/28/06~~ 092806

DATE : 08/18/06

TO SPE OF : ART UNIT 2877

SUBJECT : Request for Certificate of Correction for Appl. No.: **09/877773** Patent No.: **6809812**

Please respond to this request for a certificate of correction within 7 days.

Please review the requested changes/corrections as shown in the **COCIN** document(s) in the IFW application image. No new matter should be introduced, nor should the scope or meaning of the claims be changed.

Please complete the response (see below) and forward the completed response to scanning using document code **COCX**.

Angela Green
Certificates of Correction Branch
703.308.9380 ext. 123

Thank You For Your Assistance

The request for issuing the above-identified correction(s) is hereby:
Note your decision on the appropriate box.

- ☑ **Approved** — **All** changes apply.
- ☐ **Approved in Part** — Specify below which changes **do not** apply.
- ☐ **Denied** — State the reasons for denial below.

Comments: _____

OK

SPE

2877
Art Unit

UNITED STATES PATENT AND TRADEMARK OFFICE

Commissioner for Patents
United States Patent and Trademark Office
P.O. Box 1450
Alexandria, VA 22313-1450
www.uspto.gov

JOHN S. PRATT, ESQ
KILPATRICK STOCKTON, LLP
1100 PEACHTREE STREET
ATLANTA GA 30309

COPY MAILED

JUN 3 0 2005

OFFICE OF PETITIONS

In re Application of
Nakamura
Application No. 09/877,802
Filed: June 6, 2001
Attorney Docket No. 10960-0112
For: METHODS AND COMPOSITIONS FOR DETECTION AND DIAGNOSIS OF INFECTIOUS DISEASES

ON PETITION

This is a decision on the petition under 37 CFR 1.137(b), filed May 2, 2005 (certificate of mailing date April 28, 2005) , to revive the above-identified application. In addition, the decision will address the petition to accept black and white photographs as drawings.

The petition under 37 CFR 1.137(b) is **granted**.

The petition to accept black and white photographs as drawings is **dismissed as moot**.

This application became abandoned on February 19, 2005 for failure to timely file drawings on or before February 18, 2005 as required by the Notice of Allowability mailed November 18, 2004. A Notice of Abandonment was mailed on April 18, 2005.

Regarding the petition to accept black and white photographs as drawings, none is required. Photographs are acceptable as final drawings, in lieu of India ink drawings, to illustrate inventions which are incapable of being accurately or adequately depicted by India ink drawings. Black and white photographs submitted in lieu of ink drawings must comply with 37 CFR 1.84(b). There is no requirement for a petition or petition fee, and only one set of Photographs is required. MPEP 608.02. The $130.00 petition fee submitted on May 2, 2005 (certificate of mailing date April 28, 2005) will be credited to deposit account no. 11-0855.

The instant petition contains the required corrected formal drawings, an acceptable statement regarding the unintentional nature of the delay in responding to the November 18, 2004 Notice of Allowability, and the petition fee.

After the mailing of this decicions, the application will be forwarded to Publishing Division for consideration of the corrected formal drawings submitted with the instant petition.

Telephone inquiries concerning this matter may be directed to the undersigned at (571) 272-3230.

E. Shirene Willis

E. Shirene Willis
Senior Petitions Attorney
Office of Petitions

UNITED STATES PATENT AND TRADEMARK OFFICE

Commissioner for Patents
United States Patent and Trademark Office
P.O. Box 1450
Alexandria, VA 22313-1450
www.uspto.gov

Paper No. 20705

Kevin L. Russel
Suite 1600
601 SW Second Ave.
Portland, OR 97204-3157

FEB 17 2005

In re Application of:
John Dunklee
Serial No.: 09/877,823
Filed: June 07, 2001
Attorney Docket No.: **KLR 1016.068**

SUA SPONTE
DECISION WITHDRAWING HOLDING OF ABANDONMENT

This is a decision, *sua sponte*, withdrawing the holding of abandonment of the above-identified application.

The application was held abandoned for failure to timely file a response to the Office action mailed on May 24, 2004. A Notice of Abandonment was mailed on November 18, 2004.

A review of the written record indicates that Notice of Abandonment mentions no response was filed to a Notice of Informal or Non-responsive Amendment (Non-responsive Notice) mailed on May 24, 2004. A further review of the application file shows no record of the Non-responsive Notice allegedly mailed on May 24, 2004, and that the response filed May 12, 2004 is fully responsive. It appears that the previous entry of the Non-responsive Notice was in error. As such, the abandonment of the application was premature. Therefore, the application was not abandoned in fact.

For the above stated reason, the Notice of Abandonment is hereby vacated and the holding of abandonment withdrawn. The application is restored to pending status.

The application file is being forwarded to the examiner for consideration of the response.

Inquiries related to this decision should be directed to Clayton E. LaBalle at (571) 272-1594.

Sharon A. Gibson, Director
Technology Center 2800
Semiconductors, Electrical and Optical
Systems and Components

UNITED STATES PATENT AND TRADEMARK OFFICE

Commissioner for Patents
United States Patent and Trademark Office
P.O. Box 1450
Alexandria, VA 22313-1450
www.uspto.gov

VERTEX PHARMACEUTICALS INC.
130 WAVERLY STREET
CAMBRIDGE MA 02139-4242

COPY MAILED

JUN 25 2007

OFFICE OF PETITIONS

ON PETITION

In re Application of	:	
Charrier et al.	:	
Application No. 09/877,832	:	
Filed: June 7, 2001	:	
Attorney Docket No. VPI/00-117	:	

This is a decision on the petition under 37 C.F.R. § 1.137(b), filed May 11, 2007, to revive the above-identified application.

The petition is **GRANTED.**

The petition satisfies the conditions for revival pursuant to the provisions of 37 CFR 1.137(b) in that (1) the reply in the form of a Request to Continued Examination (RCE) and an Amendment; (2) the petition fee; and (3) the required statement of unintentional delay have been received. Accordingly, the response has been accepted as having been unintentionally delayed.

This matter is being referred to Technology Center 1600 for processing of the Request for Continued Examination under 37 CFR 1.114 filed with the instant petition.

Telephone inquiries regarding this decision should be directed to the undersigned at (571) 272-3206.

Liana Walsh
Petitions Examiner
Office of Petitions

UNITED STATES PATENT AND TRADEMARK OFFICE

COMMISSIONER FOR PATENTS
UNITED STATES PATENT AND TRADEMARK OFFICE
WASHINGTON, D.C. 20231
www.uspto.gov
DIW 03-03

Paper No. 11

MICHELLE BUGBEE
SPALDING SPORTS WORLDWIDE, INC.
425 MEADOW STREET
P.O. BOX 901
CHICOPEE MA 01021-0901

COPY MAILED

MAR 1 1 2003

OFFICE OF PETITIONS

In re Application of	:
R. Dennis Nesbitt	:
Application No. 09/877,835	: DECISION DISMISSING
Deposited: 8 June, 2001	: PETITION
Attorney Docket No. SLD 20214-3	:

This is a decision on the petition filed on 21 January, 2003, which is treated as a petition under 37 CFR 1.53(e) requesting that the above identified application be accorded a filing date of 8 June, 2001.

The petition is **dismissed**.

The application was deposited on 8 June, 2001. On 27 November, 2002, however, Initial Patent Examination Division mailed a Notice of Incomplete Nonprovisional Application, stating that the application had been deposited without drawings, and that the filing date would be the date that the drawings were received. A two (2)-month period for reply was set.

In response, the present petition was filed on 21 January, 2003, in which petitioner asserts that the application, as filed, included three (3) sheets of drawings. In support, the petition is accompanied by a copy of petitioner's return receipt postcard bearing a USPTO Office stamp with an "Office-date" of 06/08/01 and the above-identified application number and itemizing the filing of three (3) sheets of drawings.

The petition is **dismissed** without prejudice to reconsideration because petitioners have not supplied a copy of the three (3) sheets of drawings allegedly filed on 8 June, 2001. Petitioners must supply a copy of the three (3) sheets of drawings with a renewed petition.

Any request for reconsideration should be filed within **TWO MONTHS** of the date of this decision in order to be considered timely. This time period may not be extended pursuant to 37 CFR 1.136. The application will be retained in the Office of Petitions for **TWO (2) MONTHS** to await petitioner's reply to this decision. If no response is received within two (2) months, the application will be forwarded to the Office of Initial Patent Examination for further processing as an incomplete application.

Further correspondence with respect to this matter should be addressed as follows:

By mail: Commissioner of Patents and Trademarks
Box DAC
Washington, D.C. 20231

By FAX: (703)308-6916
Attn: Office of Petitions

By hand: Crystal Plaza Four, Suite CP4-3C23
2201 South Clark Place
Arlington, VA 22202

Telephone inquiries specific to this matter should be directed to the undersigned at (703) 308-6918.

D Wood

Douglas I. Wood
Senior Petitions Attorney
Office of Petitions

UNITED STATES PATENT AND TRADEMARK OFFICE

COMMISSIONER FOR PATENTS
UNITED STATES PATENT AND TRADEMARK OFFICE
WASHINGTON, D.C. 20231
www.uspto.gov
DW 03-03

Paper No. 13

MICHELLE BUGBEE
SPALDING SPORTS WORLDWIDE, INC.
425 MEADOW STREET
P.O. BOX 901
CHICOPEE MA 01021-0901

COPY MAILED

MAR 2 8 2003

OFFICE OF PETITIONS

In re Application of	:	
R. Dennis Nesbitt	:	
Application No. 09/877,835	:	DECISION GRANTING PETITION
Filed: 8 June, 2001	:	
Attorney Docket No. SLD 20214-3	:	

This is a decision on the request for reconsideration filed on 24 March, 2003, which is treated as a renewed petition under 37 CFR 1.53(e) requesting that the above identified application be accorded a filing date of 8 June, 2001.

The petition is **GRANTED**.

The application was filed on 8 June, 2001. On 27 November, 2002, however, Initial Patent Examination Division mailed a Notice of Incomplete Nonprovisional Application, stating that the application had been deposited without drawings, and that the filing date would be the date that the drawings were received. A two (2)-month period for reply was set.

In response, the present petition was filed on 21 January, 2003, in which petitioner asserts that the application, as filed, included three (3) sheets of drawings. In support, the petition is accompanied by a copy of petitioner's return receipt postcard bearing a USPTO Office stamp with an "Office-date" of 06/08/01 and the above-identified application number and itemizing the filing of three (3) sheets of drawings. The petition filed on 21 January, 2003, was dismissed because petitioners failed to supply a copy of the three (3) sheets of drawings asserted to have been filed on 8 June, 2001.

In response, on 24 March, 2003, the present request for reconsideration was filed, again asserting that the application

as filed on 8 June, 2001, included three (3) sheets of drawings. Additionally, petitioners have submitted a copy of the three (3) sheets of drawings asserted to have been filed in the USPTO on 8 June, 2001. Petitioners request that the application, including three (3) sheets of drawings, be accorded a filing date of 8 June, 2001.

A review of the record reveals that no pages of specification have been located among the application papers deposited on 8 June, 2001. However, the evidence is convincing that the application papers deposited on 8 June, 2001, included three (3) sheets of drawings, which were subsequently misplaced in the Office. Therefore, the application, including three (3) sheets of drawings, is entitled to a filing date of 8 June, 2001.

In view of the above, the petition is granted. The petition fee submitted with the petition filed on 21 January, 2003, is unnecessary and will be credited to counsel's deposit account, No. 06-0308.

The application will be processed and examined using the copy of three (3) sheets of drawings supplied on 24 March, 2003.

The application is being returned to Initial Patent Examination Division for further processing with a filing date of 8 June, 2001, using the application papers filed on that date, and the copies of three (3) sheets of drawings supplied on 24 March, 2003.

Telephone inquires should be directed to the undersigned at 703 308-6918.

DWood

Douglas I. Wood
Senior Petitions Attorney
Office of Petitions

UNITED STATES PATENT AND TRADEMARK OFFICE

COMMISSIONER FOR PATEN
UNITED STATES PATENT AND TRADEMARK OFFI
WASHINGTON, D.C. 2023
www.uspto.g

Paper No. 7

Kevin J. Zilka
SILICON VALLEY IP GROUP, LLC
P.O. Box 721120
San Jose, CA 95172-1120

MAILED

DEC 0 5 2002

Technology Center 2100

In re Application of:
Robert S. Glanville et al.
Application No. 09/877,851
Filed: June 8, 2001
For: SOFTWARE EMULATOR FOR OPTIMIZING APPLICATION-PROGRAMMABLE VERTEX PROCESSING

DECISION ON REQUEST FOR WITHDRAWAL AS ATTORNEY

This is a decision on the Request To Withdraw from Representation filed November 18, 2002.

A grantable request to withdraw as attorney of record should indicate thereon the present mailing addresses of the attorney(s) who is/are withdrawing from the record and of the applicant. The request for withdrawal must be signed by every attorney seeking to withdraw or contain a clear indication that one attorney is signing on behalf of another/others. A request to withdraw will not be approved unless at least 30 (thirty) days would remain between the date of approval and the later of the expiration date of a time to file a response or the expiration date of the maximum time period which can be extended under 37 C.F.R. § 1. 136(a). The effective date of withdrawal being the date of decision and not the date of request. See M.P.E.P. § 402.06. 37 C.F.R. § 1.36 further requires that the applicant or patent owner be notified of the withdrawal of the attorney or agent.

The request filed November 18, 2002 meets all the requirements. Accordingly the request is **GRANTED**.

All future communications from the Office will be directed to the below-listed address until otherwise notified by applicant. This correspondence address is provided by the withdrawn attorney(s). Applicant is reminded of the obligation to promptly notify the Patent and Trademark Office (Office) of any change in correspondence address to ensure receipt of all communications from the Office.

FM James R. Matthews

Vincent N. Trans
Special Programs Examiner
Technology Center 2100
Computer Architecture and Software
(703) 305-9750

cc: Bill Galliani
COOLEY GODWARD LLP
Five Palo Alto Square
3000 El Camino Real
Palo Alto, CA 94306-2155

UNITED STATES PATENT AND TRADEMARK OFFICE

COMMISSIONER FOR PATENTS
UNITED STATES PATENT AND TRADEMARK OFFICE
WASHINGTON, DC 20231
www.uspto.gov

Paper No. 8

MAIL

JAN 1 4 2003

DIRECTOR OFFICE
TECHNOLOGY CENTER 2600

SILICON VALLEY INTELLECTUAL PROPERTY GROUP
P.O. BOX 721120
SAN JOSE CA 95172-1120

In re Application of :
Mark J. Kilgard et al :
Application No. 09/877,852 :
Filed: June 8, 2001 :
For: **SYSTEM, METHOD AND COMPUTER PROGRAM PRODUCT FOR VERTEX ATTRIBUTE ALIASING IN A GRAPHICS PIPELINE** :

DECISION ON REQUEST TO WITHDRAW AS ATTORNEY

This is a decision on the request to withdraw as attorney/agent of record filed on November 18, 2002.

A grantable request to withdraw as attorney/agent of record must:
(1) indicate the present mailing address of the attorney(s)/agent(s) who seek(s) to withdraw, and
(2) be signed by each attorney/agent seeking to withdraw or clearly be signed on their behalf, and
(3) be *approved* at least thirty (30) days prior to the maximum extendable period for response to any outstanding Office Action, and
(4) indicate the address to which future correspondence should be mailed.

Petitioner has met all of the above. Accordingly, the request is **GRANTED**.

Kevin J. Zilka and Dominic M. Kotab are removed from record.

All future communications from the Office will be directed to the address listed below until otherwise notified by applicant. Applicant is reminded of the obligation to promptly notify the Patent and Trademark Office of any change in correspondence address to ensure receipt of all communications from the Office.

Krista Zele
Special Program Examiner
Technology Center 2600
Communications
(703) 305-4701

cc: Bill Galliani
Cooley Godward LLP
Five Palo Alto Square
3000 El Camino Real
Palo Alto, CA 94306-2155

UNITED STATES PATENT AND TRADEMARK OFFICE

Commissioner for Patents
United States Patent and Trademark Office
P.O. Box 1450
Alexandria, VA 22313-1450
www.uspto.gov

RICHARD J. VELTMAN
BLACK & DECKER CORPORATION
701 E. JOPPA ROAD, TW-199
TOWSON, MD 21286

COPY MAILED

DEC 3 0 2004

OFFICE OF PETITIONS

In re Application of	:	
Evan A. Benstead et al	:	
Application No. 09/877,868	:	ON PETITION
Filed: June 8, 2001	:	
Attorney Docket No. 5465-25	:	

This is a decision on the petition under 37 CFR 1.137(b), filed October 25, 2004, to revive the above-identified application.

The petition is **DISMISSED**.

Any request for reconsideration of this decision must be submitted within TWO (2) MONTHS from the mail date of this decision. Extensions of time under 37 CFR 1.136(a) are permitted. The reconsideration request should include a cover letter entitled "Renewed Petition under 37 CFR 1.137(b)." This is **not** final agency action within the meaning of 5 U.S.C. § 704.

The above-identified application became abandoned for failure to reply within the meaning of 37 CFR 1.113 in a timely manner to the final Office action mailed February 18, 2004, which set a shortened statutory period for reply of three (3) months. A reply under 37 CFR 1.113 is limited to an amendment that *prima facie* places the application in condition for allowance or a Notice of Appeal (and appeal fee required by 37 CFR 1.17(b)). The reply submitted on August 17, 2004 did not *prima facie* place the application in condition for allowance as noted in the Advisory Action mailed September 21, 2004. Therefore, as no Notice of Appeal (and appeal fee), Request for Continued Examination (RCE) or a continuing application was timely filed. Extension of time under the provisions of 37 CFR 1.136(a) were obtained, the above-identified application became abandoned on August 19, 2004.

A grantable petition under 37 CFR 1.137(b)[1] must be accompanied by: (1) the required reply,[2] unless previously filed; (2) the petition fee as set forth in 37 CFR 1.17(m); (3) a statement that the

---

[1] As amended effective December 1, 1997. See Changes to Patent Practice and Procedure; Final Rule Notice, 62 Fed. Reg. 53131, 53194-95 (October 10, 1997), 1203 Off. Gaz. Pat. Office 63, 119-20 (October 21, 1997).

[2] In a nonprovisional application abandoned for failure to prosecute, the required reply may be met by the filing of a continuing application. In an application or patent, abandoned or lapsed for failure to pay the issue fee or any portion thereof, the required reply must be the payment of the issue fee or any outstanding balance thereof.

entire delay in filing the required reply from the due date for the reply until the filing of a grantable petition pursuant to 37 CFR 1.137(b) was unintentional; and (4) any terminal disclaimer (and fee as set forth in 37 CFR 1.20(d)) required by 37 CFR 1.137(c). Where there is a question as to whether either the abandonment or the delay in filing a petition under 37 CFR 1.137 was unintentional, the Commissioner may require additional information. See MPEP 711.03(c)(III)(c) and (D). The instant petition lacks item (1).

As to item(1), petitioner has not submitted an amendment that *prima facie* places the application in condition for allowance. The required reply to the final Office action has to be a Notice of Appeal and the requisite fee, an RCE, or the filing of a continuing application under 37 CFR 1.53(b). A courtesy copy of the Advisory Action is enclosed.

Further correspondence with respect to this matter should be addressed as follows:

By mail: Mail Stop PETITIONS
Commissioner for Patents
Post Office Box 1450
Alexandria, VA 22313-1450

By hand: Customer Window located at:
U.S. Patent and Trademark Office
220 20th Street S
Customer Window, Mail Stop Petitions
Crystal Plaza Two Lobby, Room 1B03
Arlington, VA 22202

By fax: (703) 872-9306
ATTN: Office of Petitions

Telephone inquiries concerning this decision should be directed to Wan Laymon at (571) 272-3220.

Wan Laymon

Wan Laymon
Petitions Examiner
Office of Petitions
Office of the Deputy Commissioner
for Patent Examination Policy

Enclosure: Advisory Action

UNITED STATES PATENT AND TRADEMARK OFFICE

Commissioner for Patents
United States Patent and Trademark Office
P.O. Box 1450
Alexandria, VA 22313-1450
www.uspto.gov

COUDERT BROTHERS LLP
333 SOUTH HOPE STREET
23RD FLOOR
LOS ANGELES, CA 90071

COPY MAILED
MAY 24 2004
OFFICE OF PETITIONS

In re Application of :
Claus, et al. :
Application No. 09/877,880 :
Filed: June 8, 2001 :
Attorney Docket No. 0070450-0013 :

ON PETITION

This is a decision on the petition under 37 CFR 1.137(b), filed April 12, 2004, to revive the above-identified application.

The petition is **GRANTED**.

This application became abandoned for failure to timely file corrected drawings on or before February 6, 2004, as required by the Notice of Allowability mailed November 6, 2003. Accordingly, this application became abandoned on February 7, 2004. A Notice of Abandonment was mailed on March 25, 2004.

This application is being forwarded to Publishing Division for review of the drawings filed April 12, 2004.

Telephone inquiries concerning this matter may be directed to the undersigned at (703) 306-9200.

Edward J. Tannouse
Petitions Attorney
Office of Petitions
United States Patent and Trademark Office

UNITED STATES PATENT AND TRADEMARK OFFICE

Commissioner for Patents
United States Patent and Trademark Office
P.O. Box 1450
Alexandria, VA 22313-1450
www.uspto.gov

January 2005

Monte & McGraw, PC
4092 Skippack Pike
P.O. Box 650
Skippack, PA 13474

MAILED

JAN 06 2005

TECHNOLOGY CENTER 2800
SPECIAL PROGRAM CENTER

In re Application of:
Aydin Yeniay et al.
Serial No.: 09/877,888
Filed: June 8, 2001
Attorney Docket No.: PHX-0012

DECISION TO MAIL A NEW NOTICE OF ALLOWANCE

This is a decision to mail a new Notice of Allowability and a new Notice of Allowance and Fee(s) Due (hereinafter "Notices") for the above-mentioned application. The original "Notices" were mailed on September 14, 2004.

A review of the application file indicates that the original "Notices" were mailed to an incorrect address due to the improper changing of the correspondence address back to the original correspondence address on September 11, 2004.

A proper request for change of correspondence address was filed by the attorney of record for the present application on December 23, 2002. The request asked that the correspondence address be changed to Customer Number 33941 which changed the correspondence address from Photon-X Inc. in Malvern, PA. to Monte & McGraw, P.C. in Skippack, PA. A change of correspondence address to Monte & McGraw, P.C. was effected on March 8, 2003. As noted above, the improper change back to Photon-X on September 11, 2004 resulted in the "Notices" which were mailed on September 14, 2004 being sent to an incorrect address.

Accordingly, the correspondence address of the present application has been changed back to the correspondence address associated with Customer Number 33941 and new "Notices" will be mailed to the new correspondence address. The mailing of a new Notice of Allowance and Fee(s) Due will start a new three month statutory period for payment of the Fee(s) Due as of the mail date of the new Notice of Allowance and Fee(s) Due.

Any inquiries regarding this decision should be directed to Edward Westin at (571) 272-1638.

Janice A. Falcone

Janice A. Falcone, Director
Technology Center 2800
Semiconductors, Electrical and Optical
Systems and Components

UNITED STATES PATENT AND TRADEMARK OFFICE

COMMISSIONER FOR PATENTS
UNITED STATES PATENT AND TRADEMARK OFFICE
WASHINGTON, D.C. 20231
www.uspto.gov

Paper No. 08

Norman R. Klivans
SKJERVEN, MORRILL, MacPHERSON LLP
Suite 700
25 Metro Drive
San Jose CA 95110-1349

FEB 20 2003

In re Application of:	:	
Hyeion-Seag Kim	:	
Application No. 09/877,906	:	DECISION ON REQUEST TO WITHDRAW FROM RECORD
Filed: June 09, 2001	:	
For: MOSFET WITH BUFFER AND BLOCKING LAYERS	:	

This is a decision on the request to withdraw as attorney of record under 37 C.F.R. § 1.36, filed January 28, 2003.

A grantable request to withdraw as attorney of record must be signed by every attorney seeking to withdraw or contain a clear indication that one attorney is signing on behalf of others. A request to withdraw will not be approved unless at least thirty (30) days would remain between the date of approval and the later of the expiration date of a time to file a response or the expiration date of the maximum time period that can be extended under 37 C.F.R. § 1.136(a).

The request meets all the above requirements. The request was signed by Norman R. Klivans, an attorney of record in the above identified application. On December 30, 2002, the Office mailed a non-final Office Action setting forth a three-month shortened statutory period for reply that is extendable by petition under 37 C.F.R. § 1.136(a) through June 30, 2003. As such, there is at least thirty (30) days remaining between the date of this decision and the expiration date of the maximum time period that can be extended under 37 C.F.R. § 1.136(a).

The request is approved.

The application currently has no attorney of record.

All future communications from the Office will be directed to Mike Farjami, at the below-listed address until otherwise notified by applicant.

Inquiries related to this decision should be directed to Lissi Mojica Marquis at (703) 308-2260.

Lissi Mojica Marquis, Special Programs Examiner
Technology Center 2800
Semiconductors, Electrical and Optical
Systems and Components

cc: Mike Farjami
Farjami & Farjami
16148 Sand Canyon
Irvine, CA 92618

UNITED STATES PATENT AND TRADEMARK OFFICE

Commissioner for Patents
United States Patent and Trademark Office
P.O. Box 1450
Alexandria, VA 22313-1450
www.uspto.gov

ALCATEL USA
INTELLECTUAL PROPERTY DEPARTMENT
3400 W PLANO PARKWAY, MS LEGL2
PLANO, TX 75075

COPY MAILED

JUL 1 6 2004

OFFICE OF PETITIONS

In re Application of	:
Daniel T. Moriarty et al	:
Application No. 09/877,921	: DECISION GRANTING PETITION
Filed: June 7, 2001	: UNDER 37 CFR 313(c)(2)
Attorney Docket No. 2675.1006-000	:

This is a decision on the petition, filed July 6, 2004, under 37 CFR 1.313(c)(2) to withdraw the above-identified application from issue after payment of the issue fee.

The petition is **GRANTED**.

The above-identified application is withdrawn from issue for consideration of a submission under 37 CFR 1.114 (request for continued examination). See 37 CFR 1.313(c)(2).

Petitioner is advised that the issue fee paid on June 4, 2004 in the above-identified application cannot be refunded. If, however, the above-identified application is again allowed, petitioner may request that it be applied towards the issue fee required by the new Notice of Allowance.[1]

Telephone inquiries should be directed to the undersigned at (703) 305-8680.

This matter is being referred to Technology Center AU 2828 for processing of the request for continued examination under 37 CFR 1.114 and for consideration of the concurrently filed Information Disclosure Statement.

Frances Hicks
Petitions Examiner
Office of Petitions
Office of the Deputy Commissioner
for Patent Examination Policy

---

[1] The request to apply the issue fee to the new Notice may be satisfied by completing and returning the new Issue Fee Transmittal Form PTOL-85(b), which includes the following language thereon: "Commissioner for Patents is requested to apply the Issue Fee and Publication Fee (if any) or re-apply any previously paid issue fee to the application identified above." Petitioner is advised that, whether a fee is indicated as being due or not, the Issue Fee Transmittal Form **must** be completed and timely submitted to avoid abandonment. Note the language in bold text on the first page of the Notice of Allowance and Fee(s) Due (PTOL-85).

SPE RESPONSE FOR CERTIFICATE OF CORRECTION

Paper No.: _____

DATE : **5/15/09**

TO SPE OF : ART UNIT **1645 (1600)**

SUBJECT : Request for Certificate of Correction for Appl. No.: **09/877,933** Patent No.: **7,052,858**

Attn: Ja'na Hines

Please respond to this request for a certificate of correction within 7 days.

FOR IFW FILES:

Please review the requested changes/corrections as shown in the **COCIN** document(s) in the IFW application image. No new matter should be introduced, nor should the scope or meaning of the claims be changed.

Please complete the response (see below) and forward the completed response to scanning using document code **COCX**.

FOR PAPER FILES:

Please review the requested changes/corrections as shown in the attached certificate of correction. Please complete this form (see below) and forward it with the file to:

Certificates of Correction Branch (C of C)
South Tower - 9A22
Palm Location 7580

Ernest C. White, LIE
Certificates of Correction Branch
703-308-9390 ext.122

Thank You For Your Assistance

The request for issuing the above-identified correction(s) is hereby:
Note your decision on the appropriate box.

X **Approved**	**All** changes apply.
☐ **Approved in Part**	Specify below which changes **do not** apply.
☐ **Denied**	State the reasons for denial below.

Comments: _____

_____

_____

_____

/Robert B. Mondesi/ 5-17-09 1645 **SPE**
Art Unit

SPE RESPONSE FOR CERTIFICATE OF CORRECTION

Paper No.: _____

DATE : **5/15/09**

TO SPE OF : ART UNIT **1645 (1600)**

SUBJECT : Request for Certificate of Correction for Appl. No.: **09/877,933** Patent No.: **7,052,858**

Attn: Ja'na Hines

Please respond to this request for a certificate of correction within 7 days.

FOR IFW FILES:

Please review the requested changes/corrections as shown in the **COCIN** document(s) in the IFW application image. No new matter should be introduced, nor should the scope or meaning of the claims be changed.

Please complete the response (see below) and forward the completed response to scanning using document code **COCX**.

FOR PAPER FILES:

Please review the requested changes/corrections as shown in the attached certificate of correction. Please complete this form (see below) and forward it with the file to:

Certificates of Correction Branch (C of C)
South Tower - 9A22
Palm Location 7580

Ernest C. White, LIE
Certificates of Correction Branch
703-308-9390 ext.122

Thank You For Your Assistance

The request for issuing the above-identified correction(s) is hereby:
Note your decision on the appropriate box.

X **Approved**	**All** changes apply.
☐ **Approved in Part**	Specify below which changes **do not** apply.
☐ **Denied**	State the reasons for denial below.

Comments: _____

ROBERT MONDESI
SUPERVISORY PATENT EXAMINER
5-18-09

/Robert B. Mondesi/ SPE Art Unit 1645

Under the Paperwork Reduction Act of 1995, no persons are required to respond to a collection of information unless it displays valid OMB control number.

PETITION TO ACCEPT UNINTENTIONALLY DELAYED PAYMENT OF MAINTENANCE FEE IN AN EXPIRED PATENT (37 CFR 1.378(c))

Patent Number	Issue Date (YYYY-MM-DD)	Application Number	Filing Date (YYYY-MM-DD)	Docket Number (if applicable)
6524259	2003-02-25	09877986	2001-06-08	008212.P002

CAUTION: Maintenance fee (and surcharge, if any) payment must correctly identify: (1) the patent number and (2) the application number of the actual U.S. application leading to issuance of that patent to ensure the fee(s) is/are associated with the correct patent. 37 CFR 1.366(c) and (d).

SMALL ENTITY
☒ Patentee claims, or has previously claimed, small entity status. See 37 CFR 1.27.

LOSS OF ENTITLEMENT TO SMALL ENTITY STATUS
☐ Patentee is no longer entitled to small entity status. See 37 CFR 1.27(g)

NOT Small Entity		Small Entity	
Fee	Code	Fee	Code
○ 3 ½ year	(1551)	◉ 3 ½ year	(2551)
○ 7 ½ year	(1552)	○ 7 ½ year	(2552)
○ 11 ½ year	(1553)	○ 11 ½ year	(2553)

SURCHARGE
The surcharge required by 37 CFR 1.20(i)(2) (Fee Code 1558) must be paid as a condition of accepting unintentionally delayed payment of the maintenance fee.

MAINTENANCE FEE (37 CFR 1.20(e)-(g))
The appropriate maintenance fee must be submitted with this petition.

STATEMENT
THE UNDERSIGNED CERTIFIES THAT THE DELAY IN PAYMENT OF THE MAINTENANCE FEE TO THIS PATENT WAS UNINTENTIONAL

PETITIONER(S) REQUEST THAT THE DELAYED PAYMENT OF THE MAINTENANCE FEE BE ACCEPTED AND THE PATENT REINSTATED

THIS PORTION MUST BE COMPLETED BY THE SIGNATORY OR SIGNATORIES

37 CFR 1.378(d) states: "Any petition under this section must be signed by an attorney or agent registered to practice before the Patent and Trademark Office, or by the patentee, the assignee, or other party in interest."

I certify, in accordance with 37 CFR 1.4(d)(4) that I am

◉ An attorney or agent registered to practice before the Patent and Trademark Office

○ A sole patentee

○ A joint patentee; I certify that I am authorized to sign this submission on behalf of all the other patentees.

○ A joint patentee; all of whom are signing this e-petition

○ The assignee of record of the entire interest

Patent Practitioner			
A signature of the applicant or representative is required in accordance with 37 CFR 1.33 and 10.18. Please see 37 CFR 1.4(d) for the form of the signature			
Signature	/WILLIAM THOMAS BABBITT/	Date (YYYY-MM-DD)	2007-04-20
Name	WILLIAM THOMAS BABBITT	Registration Number	39591

This collection of information is required by 37 CFR 1.378(c). The information is required to obtain or retain a benefit by the public which is to file (and by the USPTO to process) an application. Confidentiality is governed by 35 U.S.C. 122 and 37 CFR 1.11 and 1.14. This collection is estimated to take 1 hour to complete, including gathering, preparing, and submitting the completed application form to the USPTO. Time will vary depending upon the individual case. Any comments on the amount of time you require to complete this form and/ or suggestions for reducing this burden, should be sent to the Chief Information Officer, U.S. Patent and Trademark Office, U.S. Department of Commerce, P.O. Box 1450, Alexandria, VA 22313-1450. DO NOT SEND FEES OR COMPLETED FORMS TO THIS ADDRESS. **This form can only be used when in conjunction with EFS-Web. If this form is mailed to the USPTO, it may cause delays in reinstating the patent.**

Privacy Act Statement

The Privacy Act of 1974 (P.L. 93-579) requires that you be given certain information in connection with your submission of the attached form related to a patent application or patent. Accordingly, pursuant to the requirements of the Act, please be advised that: (1) the general authority for the collection of this information is 35 U.S.C. 2(b)(2); (2) furnishing of the information solicited is voluntary; and (3) the principal purpose for which the information is used by the U.S. Patent and Trademark Office is to process and/or examine your submission related to a patent application or patent. If you do not furnish the requested information, the U.S. Patent and Trademark Office may not be able to process and/or examine your submission, which may result in termination of proceedings or abandonment of the application or expiration of the patent.

The information provided by you in this form will be subject to the following routine uses:

1. The information on this form will be treated confidentially to the extent allowed under the Freedom of Information Act (5 U.S.C. 552) and the Privacy Act (5 U.S.C. 552a). Records from this system of records may be disclosed to the Department of Justice to determine whether the Freedom of Information Act requires disclosure of these record s.

2. A record from this system of records may be disclosed, as a routine use, in the course of presenting evidence to a court, magistrate, or administrative tribunal, including disclosures to opposing counsel in the course of settlement negotiations.

3. A record in this system of records may be disclosed, as a routine use, to a Member of Congress submitting a request involving an individual, to whom the record pertains, when the individual has requested assistance from the Member with respect to the subject matter of the record.

4. A record in this system of records may be disclosed, as a routine use, to a contractor of the Agency having need for the information in order to perform a contract. Recipients of information shall be required to comply with the requirements of the Privacy Act of 1974, as amended, pursuant to 5 U.S.C. 552a(m).

5. A record related to an International Application filed under the Patent Cooperation Treaty in this system of records may be disclosed, as a routine use, to the International Bureau of the World Intellectual Property Organization, pursuant to the Patent Cooperation Treaty.

6. A record in this system of records may be disclosed, as a routine use, to another federal agency for purposes of National Security review (35 U.S.C. 181) and for review pursuant to the Atomic Energy Act (42 U.S.C. 218(c)).

7. A record from this system of records may be disclosed, as a routine use, to the Administrator, General Services, or his/her designee, during an inspection of records conducted by GSA as part of that agency's responsibility to recommend improvements in records management practices and programs, under authority of 44 U.S.C. 2904 and 2906. Such disclosure shall be made in accordance with the GSA regulations governing inspection of records for this purpose, and any other relevant (i.e., GSA or Commerce) directive. Such disclosure shall not be used to make determinations about individuals.

8. A record from this system of records may be disclosed, as a routine use, to the public after either publication of the application pursuant to 35 U.S.C. 122(b) or issuance of a patent pursuant to 35 U.S.C. 151. Further, a record may be disclosed, subject to the limitations of 37 CFR 1.14, as a routine use, to the public if the record was filed in an application which became abandoned or in which the proceedings were terminated and which application is referenced by either a published application, an application open to public inspections or an issued patent.

9. A record from this system of records may be disclosed, as a routine use, to a Federal, State, or local law enforcement agency, if the USPTO becomes aware of a violation or potential violation of law or regulation.

UNITED STATES PATENT AND TRADEMARK OFFICE

Commissioner for Patents
United States Patent and Trademark Office
P.O. Box 1450
Alexandria, VA 22313-1450
www.uspto.gov

In re Patent No. 6524259
Issue Date: February 25,2003
Application No. 09877986
Filed: June 8,2001
Attorney Docket No. 262/062

:
:DECISION GRANTING PETITION
:UNDER 37 CFR 1.378(c)
:

This is a decision on the electronic petition, filed April 20,2007 ,under 37 CFR 1.378(c) to accept the unintentionally delayed payment of the 3.5 year maintenance fee for the above-identified patent.

The petition is GRANTED.

The maintenance fee is accepted, and the above-identified patent reinstated as of April 20,2007 . This decision also constitutes notice that the fee has been accepted. An electronic copy of the petition and this decision has been created as an entry in an Image File Wrapper. Nevertheless, petitioner should print and retain an independent copy

Telephone inquires related to this electronic decision should be directed to the Electronic Business Center at 1-866-217-9197.

UNITED STATES
PATENT AND
TRADEMARK OFFICE

UNDER SECRETARY OF COMMERCE FOR INTELLECTUAL PROPERTY
AND DIRECTOR OF THE UNITED STATES PATENT AND TRADEMARK OFFICE
WASHINGTON, D.C. 20231
WWW.USPTO.GOV

SEP 20 2002

#5

MCHALE & SLAVIN
4440 PGA BLVD
SUITE 402
PALM BEACH GARDENS FL 33410

In re Application of	:
Maxime Ranger et al	:
Serial No.: 09/877,999	: PETITION TO MAKE SPECIAL
Filed: June 8, 2001	:
Attorney Docket No.: 2267.001	:

This is in response to applicants' petition filed September 3, 2002, to make the above-identified application special under the provisions of 37 CFR 1.102(d) and M.P.E.P 708.02, part XII.

The petition is **DENIED**.

Applicant relies on M.P.E.P. 708.02(XII) as the basis for justifying making the application special. This section relates to applications relating to biotechnology and wherein the applicant is a small entity. While applicant makes the required assertions relating to small entity status, the technology being a major asset of the entity or inventor and delay in the development or manufacture will occur if not granted, the petition fails since neither the application nor the claims are directed to biotechnology. All of the claims are directed to water-soluble polyelectrolytes or a pharmaceutical composition containing the polyelectrolyte and a drug, protein, peptide, etc. The mere inclusion of a generic term, such as peptide, protein or genetic material, as part of a pharmaceutical formulation does not qualify the application as a biotechnology related application.

The application will be taken up for action in the normal order.

Should there be any questions with regard to this letter please contact William R. Dixon, Jr. by letter addressed to the Director, Technology Center 1600, Washington, DC 20231, or by telephone at (703) 308-3824 or by facsimile transmission at (703) 305-7230

William R. Dixon, Jr.
Special Program Examiner
Technology Center 1600

UNITED STATES PATENT AND TRADEMARK OFFICE

COMMISSIONER FOR PATENTS
UNITED STATES PATENT AND TRADEMARK OFFICE
P.O. BOX 1450
ALEXANDRIA, VA 22313-1450
www.uspto.gov

Paper No. 6

ALBIN H. GESS
PRICE AND GESS
2100 SE MAIN STREET
SUITE 250
IRVINE, CA 92614-6238

COPY MAILED

JUN 06 2003

OFFICE OF PETITIONS

In re Application of
Neev and Konoplev
Application No. 09/878,002
Filed: June 8, 2001
Attorney Docket No. YBE1-BQ62
For: METHOD AND APPARATUS FOR TISSUE TREATMENT AND MODIFICATION

: DECISION GRANTING
: PETITION UNDER
: 37 CFR 1.47

This is in response to the petition under 37 CFR 1.47(a) filed December 7, 2001.

The petition is **granted**.

Petitioner has shown that the non-signing inventor cannot be located.

The above-identified application and papers have been reviewed and found in compliance with 37 CFR 1.47(a). This application is hereby accorded Rule 1.47(a) status.

As provided in Rule 1.47(c), this Office will forward notice of this application's filing to the non-signing inventor at the address given in the petition. Notice of the filing of this application will also be published in the Official Gazette.

As a courtesy, a search of the internet was performed in an attempt to locate Oleg Konoplev. The result indicates that the inventor *may* reside at 3212 Wood Stream Lane, Ellicott City, MD, 21042-2242.

After this decision is mailed, the file will be returned to the Office of Initial Patent Examination for further processing.

Telephone inquiries should be directed to Petitions Attorney Steven Brantley at (703) 306-5683.

Charles Steven Brantley
Petitions Attorney
Office of Petitions

UNITED STATES PATENT AND TRADEMARK OFFICE

COMMISSIONER FOR PATENTS
UNITED STATES PATENT AND TRADEMARK OFFICE
P.O. BOX 1450
ALEXANDRIA, VA 22313-1450
www.uspto.gov

Paper No. 6

OLEG KONOPLEV
68 SOUTHBROOK
IRVINE, CA 92604

COPY MAILED

JUN 06 2003

OFFICE OF PETITIONS

Letter

In re Application of :
Neev and Konoplev :
Application No. 09/878,002 :
Filed: June 8, 2001 :
Attorney Docket No. YBE1-BQ62 :
For: METHOD AND APPARATUS FOR TISSUE TREATMENT AND MODIFICATION :

Dear Mr. Konoplev:

You are named as a joint inventor in the above identified United States patent application, filed under the provisions of 35 U.S.C. 116 (United States Code), and 37 CFR 1.47(a), Rules of Practice in Patent Cases. Should a patent be granted on the application you will be designated therein as a joint inventor.

As a named inventor you are entitled to inspect any paper in the file wrapper of the application, order copies of all or any part thereof (at a prepaid cost per 37 CFR 1.19) or make your position of record in the application. Alternatively, you may arrange to do any of the preceding through a registered patent attorney or agent presenting written authorization from you. If you care to join the application, counsel of record (see below) would presumably assist you. Joining in the application would entail the filing of an appropriate oath or declaration by you pursuant to 37 CFR 1.63.

Requests for information regarding your application should be directed to the File Information Unit at (703)308-2733. Information regarding how to pay for and order a copy of the application, or a specific paper in the application, should be directed to Certification Division at (703)308-9726 or 1(800)972-6382 (outside the Washington D.C. area).

Telephone inquiries should be directed to Petitions Attorney Steven Brantley at (703) 306-5683.

Charles Steven Brantley
Petitions Attorney
Office of Petitions

cc: ALBIN H. GESS
PRICE AND GESS
2100 SE MAIN STREET
SUITE 250
IRVINE, CA 92614-6238

UNITED STATES PATENT AND TRADEMARK OFFICE

Commissioner for Patents
United States Patent and Trademark Office
P.O. Box 1450
Alexandria, VA 22313-1450
www.uspto.gov

Paper No. 092704

SNELL & WILMER LLP
1920 MAIN STREET, SUITE 1200
IRVINE, CA 92614-7230

OCT - 6 2004

In re Application of:	:	
JOSEPH NEEV et al.	:	
Serial No.: 09/878,002	:	DECISION ON REQUEST TO WITHDRAW
Filed: June 08, 2001	:	FROM RECORD
Attorney Docket No.: **42638-0400**	:	

This is a decision on the request to withdraw as attorney/agent of record under 37 C.F.R. § 1.36, filed March 26, 2004.

A grantable request to withdraw as attorney of record must be signed by every attorney seeking to withdraw or contain a clear indication that one attorney is signing on behalf of others. A request to withdraw will not be approved unless at least thirty (30) days would remain between the date of approval and the later of the expiration date of a time to file a response or the expiration date of the maximum time period, which can be extended under 37 C.F.R. § 1.136(a).

The request meets all the above stated requirements. The request was signed by Albin H. Gess, on behalf of himself and all the attorneys/agents of record.

The request is **APPROVED**.

There are no attorneys of record at this time. It is noted that the application is now abandoned.

All future communications from the Office will be directed to the inventor, Joseph Neev, at the below address, until otherwise notified by applicant.

Inquiries related to this decision should be directed to Jose G. Dees (571) 272-1569.

Jose G. Dees, Special Programs Examiner
Technology Center 2800
Semiconductors, Electrical and Optical
Systems and Components

cc: JOSEPH NEEV
Y-BEAM TECHNOLOGIES, INC.
20321 LAKE FOREST DRIVE, SUITE D-6
LAKE FOREST, CA 92630

UNITED STATES PATENT AND TRADEMARK OFFICE

COMMISSIONER FOR PATENT
UNITED STATES PATENT AND TRADEMARK OFFIC
WASHINGTON, D.C. 20231
www.uspto.go

Paper No. 7

Volpe and Koenig, P.C.
Suite 400
One Penn Center
1617 John F. Kennedy Boulevard
Philadelphia, Pennsylvania 19103

MAIL

MAY 2 8 2002

DIRECTOR OFFICE
TECHNOLOGY CENTER 2100

In re Application of: Abraham I. Orlick	)	
Application No. 09/878,082	)	
Filed: June 8, 2001	)	
For: SCHEDULING SYSTEM AND METHOD CONCLUDING CREATING AND/OR CHANGING A SCHEDULING SYSTEM BY AN ADMINISTRATOR AND MAKING APPOINTMENTS EMPLOYING THE SCHEDULE CONDUCTED THROUGH A GLOBAL COMPUTER NETWORK	)	DECISION ON PETITION TO MAKE SPECIAL UNDER 37 C.F.R. §1.102(c) AND MPEP § 708.02 (IV): APPLICANT'S AGE

This is a decision on the petition, filed May 3, 2002, under 37 C.F.R. §1.102(c) and M.P.E.P. §708.02(IV): Applicant's Age, to make the above-identified application special.

A grantable petition to make special under 37 C.F.R. § 1.102 and in accordance with M.P.E.P. § 708.02, Section IV must include a showing, as by a birth certificate or ***the applicant's statement,*** that the applicant is sixty five (65) years of age or more. No fee is required for this petition.

The petition includes a statement from applicant's attorney, Louis Weinstein, asserting that applicant, Abraham I. Orlick, is sixty five (65) years of age or more. Accordingly, the petition is **GRANTED.**

The application is being forwarded to the examiner for expedited prosecution.

Pinchus M. Laufer

Pinchus M. Laufer
Special Programs Examiner
Technology Center 2100
Computer Architecture, Software, and Electronic Commerce
(703) 306-4160

UNITED STATES PATENT AND TRADEMARK OFFICE

COMMISSIONER FOR PATENT
UNITED STATES PATENT AND TRADEMARK OFFIC
WASHINGTON, D.C. 20231
www.uspto.go

VOLPE AND KOENIG, P.C.
SUITE 400, ONE PENN CENTER
1617 JOHN F. KENNEDY BOULEVARD
PHILADELPHIA PA 19103

COPY MAILED

AUG 1 2 2002

OFFICE OF PETITIONS

Applicant: Abraham Orlick
Appl. No.: 09/878,082
Filing Date: June 8, 2001
Title: SCHEDULING SYSTEM AND METHOD CONCLUDING CREATING AND/OR CHANGING A SCHEDULING SYSTEM BY AN ADMINISTRATOR AND MAKING APPOINTMENTS EMPLOYING THE SCHEDULE CONDUCTED THROUGH A GLOBAL COMPUTER NETWORK
Attorney Docket No.: DAV3-PT001.1
Pub. No.: US 2002/0049733 A1
Pub. Date: April 25, 2002

This is in response to the request for republication of patent application publication under 37 CFR 1.221(a), which was filed on May 3, 2002.

The request is DISMISSED.

The instant request is that the application be republished with the fifty-six (56) sheets of formal drawings filed on December 7, 2001. The application including the drawings as filed on June 8, 2001, were published correctly. The preliminary amendment filed on December 7, 2001, included fifty-six (56) sheets of formal drawings. However, a patent application publication does not include preliminary amendments, according to 37 CFR 1.215(a), which says the following, in part:

> (a) ... The patent application publication will not include any amendments, including preliminary amendments, unless applicant supplies a copy of the application containing the amendment pursuant to paragraph (c) of this section.

§ 1.215(c) says the following:

> (c) At applicant's option, the patent application publication will be based upon the copy of the application (specification, drawings, and oath or declaration) as amended during examination, provided that applicant supplies such a copy in compliance with the Office electronic filing system requirements within one month of the actual filing date of the application or fourteen months of the earliest filing date for which is sought under title 35, United States Code, whichever is later.

The applicant did not supply a copy of the application in compliance with § 1.215(c). The Office correctly published the application including the drawings in accordance with § 1.215(a).

If applicant desires to have better drawings included in a patent application publication than the drawings which were submitted with the application on filing, applicant may submit replacement drawings on paper within the later of one month from the filing date of the application or fourteen months from the earliest filing date for which a benefit is sought under title 35, United States

Code.[1] The replacement paper drawings must be filed in an envelope addressed to BOX PG PUB DRAWINGS, Commissioner for Patents, Washington D.C. 20231, with a petition under 37 CFR 1.182 requesting entry of the drawings, and the petition fee set forth in 37 CFR 1.17(h), in the time period set forth above. Replacement drawings that are received later than this date may be included in the patent application publication, where practicable, if the USPTO has not started the patent application publication process.

The applicant is advised that a "request for republication of an application previously published" may be filed under 37 CFR 1.221(a). Such a request for republication "must include a copy of the application in compliance with the Office's electronic filing system requirements and be accompanied by the publication fee set forth in § 1.18(d) and the processing fee set forth in § 1.17(i)." If the request for republication does not comply with the electronic filing system requirements, the republication will not take place and the publication fee set forth in § 1.18(d) will be refunded. The processing fee will be retained.

After mailing of this decision, the application will be forwarded to the Technology Center 2100 for handling in due course.

Any request for reconsideration of this decision, should be addressed as follows:

By mail to: Box PGPUB
Commissioner for Patents
Washington, DC 20231

By facsimile: 703-305-8568

Inquiries relating to this matter may be directed to Mark Polutta at (703) 308-8122 (voice) or (703) 746-3465 (facsimile).

Mark O. Polutta
Office of Patent Legal Administration
Office of the Deputy Commissioner
for Patent Examination Policy

[1] Drawings in Patent Application Publications and Patents, 1242 Off. Gaz. Pat. Office Notices 114 (Jan.16, 2001).

UNITED STATES PATENT AND TRADEMARK OFFICE

Commissioner for Patents
United States Patent and Trademark Office
P.O. Box 1450
Alexandria, VA 22313-1450
www.uspto.gov

R. Alan Burnett
BLAKELY, SOKOLOFF, TAYLOR & ZAFMAN LLP
Seventh Floor
12400 Wilshire Boulevard
Los Angeles CA 90025-1026

COPY MAILED
MAY 0 9 2006
OFFICE OF PETITIONS

In re Application of	:	
Gary B. Rohrabaugh, et al.	:	
Application No. 09/878,097	:	DECISION ON PETITION
Filed: June 8, 2001	:	TO WITHDRAW
Attorney Docket No. N/A	:	FROM RECORD
	:	

This is a decision on the Request to Withdraw as attorney or agent of record under 37 C.F.R. § 1.36(b), filed February 2, 2006.

The request is **APPROVED**.

A grantable request to withdraw as attorney/agent of record must be signed by every attorney/agent seeking to withdraw or contain a clear indication that one attorney is signing on behalf of another/others. A request to withdraw will not be approved unless at least 30 (thirty) days would remain between the date of approval and the later of the expiration date of a time to file a response or the expiration date of the maximum time period which can be extended under 37 C.F.R. § 1.136(a).

The request was signed by James Y. Go, on behalf of himself and all practitioners of record. All attorneys/agents have been withdrawn.

The correspondence address of record has been changed and all future correspondence will be directed to the first named inventor Gary Rohrabaugh at the address indicated below.

Telephone inquiries concerning this decision should be directed to Cheryl Gibson-Baylor at (571)-272-3213.

Cheryl Gibson-Baylor
Petitions Examiner
Office of Petitions

Conferee: Denise Pothier

cc: Gary Rohrabaugh
112 Ohio Street, Suite 202
Bellingham, WA 98225

UNITED STATES PATENT AND TRADEMARK OFFICE

COMMISSIONER FOR PATENTS
UNITED STATES PATENT AND TRADEMARK OFFICE
P.O. BOX 1450
ALEXANDRIA, VA 22313-1450
www.uspto.gov

JJGJr: 12-03

Paper No: 7

WEBB ZIESENHEIM
LOGSDON ORKIN & HANSON PC
700 KOPPERS BUILDING
436 SEVENTH AVENUE
PITTSBURGH PA 15219

COPY MAILED

DEC 2 2 2003

OFFICE OF PETITIONS

In re Application of	:	
Hammerstedt, et al.	:	
Application No. 09/878,099	:	DECISION ON PETITION
Filed: 8 June, 2001	:	
Attorney Docket No.: 2034-00118	:	

This is a decision on the petition filed on 16 December, 2002, to correct the Express Mail filing date under 37 C.F.R. §1.10, and seeking for the above-identified application a filing date of 8 June, 2001, instead of the presently accorded filing date of 9 June, 2001.

The file and original petition were not received into Petitions until this writing, and the Office regrets the delay in addressing this matter.

The petition is **GRANTED**, the petition fee is waived.

NOTE: Docketing of a Status Inquiry at six- (6-) month intervals following the filing of replies/petitions may be prudent practice to demonstrate diligence when lengthy delays subsequently occur in matters such as this.

BACKGROUND AND ANALYSIS

The record reflects that:

- the instant application was received on Monday 11, June, 2001, and given a filing date of 9 June, 2001, consistent with the handwritten "date in" notation;

- a filing receipt was not mailed to Applicant/Petitioner (Petitioner) until 30 May, 2002;

- Petitioner Barbara E. Johnson (Reg. No. 31,198) submits her petition and statement, and recites that attachments/enclosures include a copy of the US Postal Service (USPS) Express Mail Label No. EL56244138US, which evidences a handwritten "date in" of "6-9-01" but a USPS date stamp indicating the USPS "Pittsburgh, PA Grant St. Sta. JUN 8 2001";

- Petitioner's application transmittal also bears the USPS Express Mail Label No. EL56244138US, and a certificate of Express Mail dated 8 June, 2001, and signed;

- a review of Office data indicates that the package bearing Express Mail Label No. EL56244138US was accepted by the USPS for shipment at 4:59 p.m. on Friday, 8 June, 2001, and delivered to and accepted by the Office on Monday, 11 June, 2001.

CONCLUSION

Therefore, as to the instant nonprovisional application, Application No. 09/878,099, the Office of Initial Patent Examination is specifically instructed to:

- assign a filing date of 8 June, 2001; and

- issue a filing receipt specifying the filing date as that of 8 June, 2001.

The instant application is being forwarded to OIPE to be handled as set forth above before being forwarded further processing.

Telephone inquiries concerning this decision may be directed to the undersigned at (703) 305-9199.

John J. Gillon, Jr.
Senior Attorney
Office of Petitions

UNITED STATES
PATENT AND
TRADEMARK OFFICE

UNDER SECRETARY OF COMMERCE FOR INTELLECTUAL PROPERTY
AND DIRECTOR OF THE UNITED STATES PATENT AND TRADEMARK OFFICE
WASHINGTON, D.C. 20231
WWW.USPTO.GOV

SEP 20 2002

MCHALE & SLAVIN
4440 PGA BLVD
SUITE 402
PALM BEACH GARDENS FL 33410

#5

In re Application of	:
Maxime Ranger et al	:
Serial No.: 09/878,115	: PETITION TO MAKE SPECIAL
Filed: June 8, 2001	:
Attorney Docket No.: 2267.002	:

This is in response to applicants' petition filed September 3, 2002, to make the above-identified application special under the provisions of 37 CFR 1.102(d) and M.P.E.P 708.02, part XII.

The petition is **DENIED**.

Applicant relies on M.P.E.P. 708.02(XII) as the basis for justifying making the application special. This section relates to applications relating to biotechnology and wherein the applicant is a small entity. While applicant makes the required assertions relating to small entity status, the technology being a major asset of the entity or inventor and delay in the development or manufacture will occur if not granted, the petition fails since neither the application nor the claims are directed to biotechnology. All of the claims are directed to water-soluble polyelectrolytes or a pharmaceutical composition containing the polyelectrolyte and a drug, protein, peptide, etc. The mere inclusion of a generic term, such as peptide, protein or genetic material, as part of a pharmaceutical formulation does not qualify the application as a biotechnology related application.

The application will be taken up for action in the normal order.

Should there be any questions with regard to this letter please contact William R. Dixon, Jr. by letter addressed to the Director, Technology Center 1600, Washington, DC 20231, or by telephone at (703) 308-3824 or by facsimile transmission at (703) 305-7230

William R. Dixon, Jr.
Special Program Examiner
Technology Center 1600

UNITED STATES PATENT AND TRADEMARK OFFICE

COMMISSIONER FOR PATENTS
UNITED STATES PATENT AND TRADEMARK OFFICE
P.O. BOX 1450
ALEXANDRIA, VA 22313-1450
www.uspto.gov

Paper No. 13

COPY MAILED
SEP 30 2003
OFFICE OF PETITIONS

KLARQUIST SPARKMAN, LLP
121 SW SALMON STREET
SUITE 1600
PORTLAND OR 97204

In re Application of
Alan W. Reichow et al.
Application No. 09/878,128
Filed: June 7, 2001
Attorney Docket No. 2242-59212/MDJ
Title: ACTIVITY-SPECIFIC OPTICAL FILTERS AND EYEWEAR USING SUCH FILTERS

DECISION ON PETITION
UNDER 37 C.F.R. §1.137(f)

This is a decision on the petition filed on July 25, 2003, pursuant to 37 C.F.R. §1.137(f), to revive the above-identified application.

A grantable petition pursuant to 37 CFR 1.137(f) must be accompanied by:

(1) Notification of the filing of an application in a foreign country or under a multinational treaty that requires 18 month publication[1];
(2) The petition fee as set forth in 37 C.F.R. § 1.17(m), and;
(3) A statement that the entire delay in filing the notice from the date that the notice was due under 35 U.S.C. §122(b)(2)(B)(iii) until the date the notice was filed was unintentional. The Commissioner may require additional information where there is a question whether the delay was unintentional.

Petitioner states that the instant nonprovisional application is the subject of an application filed in an international application on January 23, 2002. However, the United States Patent and Trademark Office was unintentionally not notified of this filing within 45 days subsequent to the filing of the subject application in a foreign country.

1 See PTO/SB/36 and paragraph on PTO/SB/64a for further information. Both may be downloaded at http://www.uspto.gov/web/forms/index.html.

On February 19, 2002, a Notice of Rescission of Nonpublication Request was filed with the Office. Unfortunately, this was not accompanied by a notice of the foreign or international filing.

In view of the above, this application became abandoned pursuant to 35 U.S.C. §1.22(b)(2)(B)(iii) and 37 C.F.R. §1.213(c) for failure to timely notify the Office of the filing of an application under a multilateral international agreement that requires publication of applications 18 months after filing. Petitioner's assertions that the application was not abandoned are incorrect.

37 C.F.R. §1.137(f) requires a statement that the entire delay in filing the notice from the date that the notice was due under 35 U.S.C. §122(b)(2)(B)(iii) until the date the notice was filed was unintentional. Since the statement contained in the instant petition varies from the language required by 37 C.F.R. §1.137(f), the statement contained in the instant petition is being construed as the statement required by 37 C.F.R. §1.137(f) and petitioner must notify the Office if this is not a correct interpretation of the statement contained in the instant petition.

The petition under 37 C.F.R. §1.137(f) is **GRANTED**.

Petitioner has submitted the notification of an international filing, paid the petition fee, and has made a statement which is being construed as the proper statement of unintentional delay.

The instant petition has been found to be in compliance with 37 C.F.R. §1.137(f). Accordingly, the failure to timely notify the Office of a foreign or international filing within 45 days after the date of filing of such foreign or international application as provided by 35 U.S.C. §122(b)(2)(B)(iii) and 37 C.F.R. §1.213(c) is accepted as having been unintentionally delayed.

After this decision is mailed, the application will be forwarded to Technology Center 2800 for further processing.

Telephone inquiries concerning *this decision* should be directed to Attorney Paul Shanoski at (703) 305-0011.

Paul Shanoski
Attorney
Office of Petitions
United States Patent and Trademark Office

UNITED STATES PATENT AND TRADEMARK OFFICE

Commissioner for Patents
United States Patent and Trademark Office
P.O. Box 1450
Alexandria, VA 22313-1450
www.uspto.gov

JOSEPH F. HETZ
BRINKS HOFER GILSON & LIONE
P.O. BOX 10395
CHICAGO, IL 60610

COPY MAILED

OCT 13 2005

OFFICE OF PETITIONS

In re Application of :
Christopher S. Moore et al :
Application No. 09/878,138 :
Filed: June 8, 2001 :
Attorney Docket No. 10519/34

ON PETITION

This is a decision on the petition, filed October 4, 2005 under 37 CFR 1.313(c)(2) to withdraw the above-identified application from issue after payment of the issue fee.

The petition is **GRANTED**.

The above-identified application is withdrawn from issue for consideration of a submission under 37 CFR 1.114 (request for continued examination). See 37 CFR 1.313(c)(2).

Petitioner is advised that the issue fee paid on April 25, 2005 in the above-identified application cannot be refunded. If, however, the above-identified application is again allowed, petitioner may request that it be applied towards the issue fee required by the new Notice of Allowance.[1]

Telephone inquiries should be directed to Irvin Dingle at (571) 272-3210.

This matter is being referred to Technology Center 2186 for processing of the request for continued examination under 37 CFR 1.114 and for consideration of the concurrently filed Information Disclosure Statement.

Irvin Dingle
Petitions Examiner
Office of Petitions

[1] The request to apply the issue fee to the new Notice may be satisfied by completing and returning the new Issue Fee Transmittal Form PTOL-85(b), which includes the following language thereon: Commissioner for Patents is requested to apply the Issue Fee and Publication Fee (if any) or re-apply any previously paid issue fee to the application identified above. Petitioner is advised that, whether a fee is indicated as being due or not, the Issue Fee Transmittal Form **must** be completed and timely submitted to avoid abandonment. Note the language in bold text on the first page of the Notice of Allowance and Fee(s) Due (PTOL-85).

SCAN! **Please forward case and paper to address shown below.**

SPE RESPONSE FOR CERTIFICATE OF CORRECTION

Paper No.: _____

DATE : 6/17/08

TO SPE OF : ART UNIT 2611 WANG, Ted

SUBJECT : Request for Certificate of Correction for Appl. No.: 09/878148 Patent No.: 7242726

Please respond to this request for a certificate of correction within 7 days.

Please review the requested changes/corrections as shown in the attached certificate of correction. Please complete this form (see below) and forward it with the file to:

Certificates of Correction Branch (CofC)
South Tower - 9A22
Palm Location 7580

HENRY RANDALL
Certificates of Correction Branch
703-308-9390 ext. _____

Thank You For Your Assistance

The request for issuing the above-identified correction(s) is hereby:

Note your decision on the appropriate box.

- [x] Approved — All changes apply.
- [ ] Approved in Part — Specify below which changes do not apply.
- [ ] Denied — State the reasons for denial below.

Comments: _____

Chris Mi Fa — SPE

2611 — Art Unit

UNITED STATES PATENT AND TRADEMARK OFFICE

Commissioner for Patents
United States Patent and Trademark Office
P.O. Box 1450
Alexandria, VA 22313-1450
www.uspto.gov

ANT CORPORATION
4-4 SOONNE-DOUGH, BUNDANG-KU
SEONGNAM-CITY 463-8-25 KR KOREA
REPUBLIC OF

COPY MAILED

JUL 14 2004

OFFICE OF PETITIONS

In re Application of :
Myron M. Lee :
Application No. 09/878,153 :
Filed: June 11, 2001 :
Attorney Docket No. 911-2557 :

ON PETITION

This is a decision on the paper filed February 14, 2004 which is being treated as a petition under 37 CFR 1.137(b), to revive the above-identified application.

The petition is **DISMISSED**.

Any request for reconsideration of this decision must be submitted within TWO (2) MONTHS from the mail date of this decision. Extensions of time under 37 CFR 1.136(a) are permitted. The reconsideration request should include a cover letter entitled "Renewed Petition under 37 CFR 1.137(b)." This is **not** final agency action within the meaning of 5 U.S.C. § 704.

A grantable petition under 37 CFR 1.137(b)[1] must be accompanied by: (1) the required reply,[2] unless previously filed; (2) the petition fee as set forth in 37 CFR 1.17(m); (3) a statement that the entire delay in filing the required reply from the due date for the reply until the filing of a grantable petition pursuant to 37 CFR 1.137(b) was unintentional; and (4) any terminal disclaimer (and fee as set forth in 37 CFR 1.20(d)) required by 37 CFR 1.137(c). Where there is a question as to whether either the abandonment or the delay in filing a petition under 37 CFR 1.137 was unintentional, the Commissioner may require additional information. See MPEP 711.03(c)(III)(C) and (D). The instant petition lack(s) item(s) (1) and (2).

---

[1] As amended effective December 1, 1997. See Changes to Patent Practice and Procedure; Final Rule Notice, 62 Fed. Reg. 53131, 53194-95 (October 10, 1997), 1203 Off. Gaz. Pat. Office 63, 119-20 (October 21, 1997).

[2] In a nonprovisional application abandoned for failure to prosecute, the required reply may be met by the filing of a continuing application. In an application or patent, abandoned or lapsed for failure to pay the issue fee or any portion thereof, the required reply must be the payment of the issue fee or any outstanding balance thereof.

The above-identified application became abandoned for failure to reply in a timely manner to the non-final Office action mailed May 1, 2003, which set a shortened statutory period for reply of three (3) months. Three months extension of time under the provisions of 37 CFR 1.136(a) were obtained. Accordingly, the above-identified application became abandoned on November 2, 2003. A reply was received on December 2, 2003, which is after the expiration of the period for reply (including a total extension of time of 6 months). This application can not be revive until the required reply has been timely submitted.

As to item (2), a petition to revive unintentionally abandon application (small entity) petition fee is $665. This application can not be revive until this fee has been received.

Further correspondence with respect to this matter should be addressed as follows:

By mail: Mail Stop PETITION
Commissioner for Patents
Post Office Box 1450
Alexandria, VA 22313-1450

Effective December 1, 2003, the Office of Petitions can no longer receive hand-carried correspondence, or facsimile transmissions of correspondence. The centralized location for hand-carried correspondence is the Customer Window located at:

2011 South Clark Place
Crystal Plaza Two, Lobby
Room 1B03
Arlington, VA 22202

The centralized facsimile number is **(703) 872-9306.**

Telephone inquiries concerning this decision should be directed to the undersigned at (703) 306-5684.

Irvin Dingle
Petitions Examiner
Office of Petitions
Office of the Deputy Commissioner
For Patent Examination Policy

Approved for use through 04/30/2009. OMB 0651-0016
U.S. Patent and Trademark Office: U.S. DEPARTMENT OF COMMERCE
Under the Paperwork Reduction Act of 1995, no persons are required to respond to a collection of information unless it displays valid OMB control number.

PETITION TO ACCEPT UNINTENTIONALLY DELAYED PAYMENT OF MAINTENANCE FEE IN AN EXPIRED PATENT (37 CFR 1.378(c))

Patent Number	Issue Date (YYYY-MM-DD)	Application Number	Filing Date (YYYY-MM-DD)	Docket Number (if applicable)
6652217	2003-11-25	09878157	2001-06-08	410006-258

CAUTION: Maintenance fee (and surcharge, if any) payment must correctly identify: (1) the patent number and (2) the application number of the actual U.S. application leading to issuance of that patent to ensure the fee(s) is/are associated with the correct patent. 37 CFR 1.366(c) and (d).

SMALL ENTITY
☐ Patentee claims, or has previously claimed, small entity status. See 37 CFR 1.27.

LOSS OF ENTITLEMENT TO SMALL ENTITY STATUS
☐ Patentee is no longer entitled to small entity status. See 37 CFR 1.27(g)

NOT Small Entity		Small Entity	
Fee	Code	Fee	Code
◉ 3 ½ year	(1551)	○ 3 ½ year	(2551)
○ 7 ½ year	(1552)	○ 7 ½ year	(2552)
○ 11 ½ year	(1553)	○ 11 ½ year	(2553)

SURCHARGE
The surcharge required by 37 CFR 1.20(i)(2) (Fee Code 1558) must be paid as a condition of accepting unintentionally delayed payment of the maintenance fee.

MAINTENANCE FEE (37 CFR 1.20(e)-(g))
The appropriate maintenance fee must be submitted with this petition.

STATEMENT
THE UNDERSIGNED CERTIFIES THAT THE DELAY IN PAYMENT OF THE MAINTENANCE FEE TO THIS PATENT WAS UNINTENTIONAL

PETITIONER(S) REQUEST THAT THE DELAYED PAYMENT OF THE MAINTENANCE FEE BE ACCEPTED AND THE PATENT REINSTATED

THIS PORTION MUST BE COMPLETED BY THE SIGNATORY OR SIGNATORIES

37 CFR 1.378(d) states: "Any petition under this section must be signed by an attorney or agent registered to practice before the Patent and Trademark Office, or by the patentee, the assignee, or other party in interest."

I certify, in accordance with 37 CFR 1.4(d)(4) that I am

◉ An attorney or agent registered to practice before the Patent and Trademark Office

○ A sole patentee

○ A joint patentee; I certify that I am authorized to sign this submission on behalf of all the other patentees.

○ A joint patentee; all of whom are signing this e-petition

○ The assignee of record of the entire interest

Patent Practitioner			
A signature of the applicant or representative is required in accordance with 37 CFR 1.33 and 10.18. Please see 37 CFR 1.4(d) for the form of the signature			
Signature	/Barbara A. Wrigley/	Date (YYYY-MM-DD)	2008-09-23
Name	Barbara A. Wrigley	Registration Number	34950

This collection of information is required by 37 CFR 1.378(c). The information is required to obtain or retain a benefit by the public which is to file (and by the USPTO to process) an application. Confidentiality is governed by 35 U.S.C. 122 and 37 CFR 1.11 and 1.14. This collection is estimated to take 1 hour to complete, including gathering, preparing, and submitting the completed application form to the USPTO. Time will vary depending upon the individual case. Any comments on the amount of time you require to complete this form and/ or suggestions for reducing this burden, should be sent to the Chief Information Officer, U.S. Patent and Trademark Office, U.S. Department of Commerce, P.O. Box 1450, Alexandria, VA 22313-1450. DO NOT SEND FEES OR COMPLETED FORMS TO THIS ADDRESS. **This form can only be used when in conjunction with EFS-Web. If this form is mailed to the USPTO, it may cause delays in reinstating the patent.**

Privacy Act Statement

The Privacy Act of 1974 (P.L. 93-579) requires that you be given certain information in connection with your submission of the attached form related to a patent application or patent. Accordingly, pursuant to the requirements of the Act, please be advised that: (1) the general authority for the collection of this information is 35 U.S.C. 2(b)(2); (2) furnishing of the information solicited is voluntary; and (3) the principal purpose for which the information is used by the U.S. Patent and Trademark Office is to process and/or examine your submission related to a patent application or patent. If you do not furnish the requested information, the U.S. Patent and Trademark Office may not be able to process and/or examine your submission, which may result in termination of proceedings or abandonment of the application or expiration of the patent.

The information provided by you in this form will be subject to the following routine uses:

1. The information on this form will be treated confidentially to the extent allowed under the Freedom of Information Act (5 U.S.C. 552) and the Privacy Act (5 U.S.C. 552a). Records from this system of records may be disclosed to the Department of Justice to determine whether the Freedom of Information Act requires disclosure of these record s.

2. A record from this system of records may be disclosed, as a routine use, in the course of presenting evidence to a court, magistrate, or administrative tribunal, including disclosures to opposing counsel in the course of settlement negotiations.

3. A record in this system of records may be disclosed, as a routine use, to a Member of Congress submitting a request involving an individual, to whom the record pertains, when the individual has requested assistance from the Member with respect to the subject matter of the record.

4. A record in this system of records may be disclosed, as a routine use, to a contractor of the Agency having need for the information in order to perform a contract. Recipients of information shall be required to comply with the requirements of the Privacy Act of 1974, as amended, pursuant to 5 U.S.C. 552a(m).

5. A record related to an International Application filed under the Patent Cooperation Treaty in this system of records may be disclosed, as a routine use, to the International Bureau of the World Intellectual Property Organization, pursuant to the Patent Cooperation Treaty.

6. A record in this system of records may be disclosed, as a routine use, to another federal agency for purposes of National Security review (35 U.S.C. 181) and for review pursuant to the Atomic Energy Act (42 U.S.C. 218(c)).

7. A record from this system of records may be disclosed, as a routine use, to the Administrator, General Services, or his/her designee, during an inspection of records conducted by GSA as part of that agency's responsibility to recommend improvements in records management practices and programs, under authority of 44 U.S.C. 2904 and 2906. Such disclosure shall be made in accordance with the GSA regulations governing inspection of records for this purpose, and any other relevant (i.e., GSA or Commerce) directive. Such disclosure shall not be used to make determinations about individuals.

8. A record from this system of records may be disclosed, as a routine use, to the public after either publication of the application pursuant to 35 U.S.C. 122(b) or issuance of a patent pursuant to 35 U.S.C. 151. Further, a record may be disclosed, subject to the limitations of 37 CFR 1.14, as a routine use, to the public if the record was filed in an application which became abandoned or in which the proceedings were terminated and which application is referenced by either a published application, an application open to public inspections or an issued patent.

9. A record from this system of records may be disclosed, as a routine use, to a Federal, State, or local law enforcement agency, if the USPTO becomes aware of a violation or potential violation of law or regulation.

UNITED STATES PATENT AND TRADEMARK OFFICE

Commissioner for Patents
United States Patent and Trademark Office
P.O. Box 1450
Alexandria, VA 22313-1450
www.uspto.gov

In re Patent No. 6652217
Issue Date: November 25,2003
Application No. 09878157
Filed: June 8,2001
Attorney Docket No. 410006/258

:
:DECISION GRANTING PETITION
:UNDER 37 CFR 1.378(c)
:

This is a decision on the electronic petition, filed September 23,2008 ,under 37 CFR 1.378(c) to accept the unintentionally delayed payment of the 3.5 year maintenance fee for the above-identified patent.

The petition is **GRANTED**.

The maintenance fee is accepted, and the above-identified patent reinstated as of September 23,2008 . This decision also constitutes notice that the fee has been accepted. An electronic copy of the petition and this decision has been created as an entry in the Image File Wrapper. Nevertheless, petitioner should print and retain an independent copy.

Telephone inquiries related to this electronic decision should be directed to the Electronic Business Center at 1-866-217-9197.

UNITED STATES PATENT AND TRADEMARK OFFICE

COMMISSIONER FOR PATENTS
UNITED STATES PATENT AND TRADEMARK OFFICE
WASHINGTON, D.C. 20231
www.uspto.gov

Paper No. 6

JOHN F. HAYDEN
Fish & Richardson P.C.
601 Thirteenth Street, N.W.
Washington DC 20005

COPY MAILED

APR 2 9 2002

OFFICE OF PETITIONS

In re Application of	:	
Gillick, Roth, Manganaro, Peskin, Petty, and Rao	:	
Application No.:09/878,173	:	DECISION ACCORDING
Filed: June 12, 2001	:	STATUS UNDER RULE
Attorney Docket No:06998-080001	:	47(a)
For: USING UTTERANCE-LEVEL CONFIDENCE	:	
ESTIMATES	:	

This is in response to the petition under 37 CFR 1.47(a), filed February 13, 2002.

The petition is **GRANTED**.

The above-identified application and papers have been reviewed and found in compliance with 37 CFR 1.47(a). This application is hereby accorded Rule 1.47(a) status.

A "Notice to File Missing Parts of Non-Provisional Application" ("Notice") was mailed to petitioner on August 13, 2001, indicating that filing and claim fees associated with the above-cited application had not been remitted, that a proper oath or declaration had not been filed, and that a $130.00 surcharge was also due because a proper oath or declaration was not timely filed. The Notice set forth an extendable period for reply of two months from the mailing date of the Notice.

In response to the Notice, petitioner filed the instant petition, a "Petition for Four-Month Extension of Time", a declaration executed by all named inventors, except inventors, Gillick and Roth, the "Declaration of Patri J. Pugliese", and remitted the required fees and surcharge. By the declaration of Patri J. Pugliese, petitioner established that, although all the named inventors were presented with the complete application papers, inventors Gillick and Roth constructively refused to join the prosecution of the application at present.

Petitioner has shown that inventors Gillick and Roth have refused to join the filing of the above-identified application after having been presented with the application papers, and the above-identified application and papers have been reviewed and found in compliance with 37 CFR 1.47(a). This application is hereby accorded Rule 1.47(a) status.

As provided in Rule 1.47(c), this Office will forward notice of this application's filing to the non-signing inventor at the address given in the petition. Notice of the filing of this application will also be published in the Official Gazette.

This application will be forwarded to the Office of Initial Patent Examination for further processing.

Telephone inquiries should be directed to Kenya A. McLaughlin, Petitions Attorney, at (703) 305-0010.

Kenya A. McLaughlin
Petitions Attorney
Office of Petitions
Office of the Deputy Commissioner
for Patent Examination Policy

Beverly M. Flanagan
Supervisory Petitions Examiner
Office of Petitions
Office of the Deputy Commissioner
for Patent Examination Policy

UNITED STATES PATENT AND TRADEMARK OFFICE

UNITED STATES DEPARTMENT OF COMMERCE
United States Patent and Trademark Office
Address: COMMISSIONER FOR PATENTS
P.O. Box 1450
Alexandria, Virginia 22313-1450
www.uspto.gov

December 4, 2003

Scott W. Cummings
Burns, Doane, Swecker & Mathis
P.O. Box 1404
Alexandria, VA 22313 1404

In re application of:
Mathias Berglund et al DECISION ON PETITION
Serial No.: 09/878,240
Filed: June 12, 2001
For: TWO-PIECE ROTARY METAL-CUTTING TOOL AND METHOD FOR INTERCONNECTING THE PIECES

This is a decision on the petition received by fax on November 18, 2003, to withdraw the holding of abandonment in the above-identified application.

The above-identified application became abandoned for failure to reply within the meaning of 37 C.F.R. 1.113 in timely manner to the Reissue Supplement Notice to File Missing Parts of Application mailed on July 18, 2001. Which set a shortened statutory period for reply of two (2) months. Accordingly, this application became abandoned September 19, 2001.

On November 18, 2003, the office received a communication from the attorney of record. Enclosed was an acknowledgement that the attorney never received the Reissue Supplement Notice to File Missing Parts Application mailed on July 18, 2001.

The petition is hereby GRANTED.

The evidence submitted is sufficient to establish that the petitioners did not received the Reissue Supplement Notice to File Missing Parts Application mailed on July 18, 200l.

The application will be complete with the faxed documents received on October 1, 2001 and released to Technology Center 3722.

The Office regrets any inconvenience this may have caused the client.

Telephone inquiries concerning this matter may be directed to Doshie E. Day
(703) 308-3640.

Doshie E. Day
Program Management Assistant
Office initial Patent Examination

BURNS DOANE

BURNS DOANE SWECKER & MATHIS LLP
ATTORNEYS AT LAW

ALEXANDRIA, VIRGINIA
REDWOOD SHORES, CALIFORNIA
DURHAM, NORTH CAROLINA

REPLY TO:
P.O. Box 1404
Alexandria, Virginia 22313-1404

TELEPHONE: +1.703.836.6620

FACSIMILE: +1.703.836.2021 (Group 3)
+1.703.836.0028 (Group 4)

DATE: November 18, 2003

RECIPIENT INFORMATION		SENDER INFORMATION	
To:	**Ms. McDowell**	From:	**Scott W. Cummings**
Voice Tel. No.:	**703-308-9477**	Voice Tel. No.:	**703-838-6680**
Fax Tel. No.:	**703-308-7749**	Sent By:	**G. Harrell**
Your Ref.:		Our Ref.:	**024444-902**
		Total Pages (Incl. Cover Page):	**23**

RE: U.S. Patent Application No. 09/878,240

MESSAGE:

Per your request, please see the attached.

NOTE: The information contained in this facsimile message is attorney-client privileged and contains confidential information intended only for the use of the person(s) named above and others expressly authorized to receive it. If you are not the intended recipient, you are hereby notified that any dissemination, distribution or copying of this message is prohibited and you are asked to notify us immediately by telephone and to return this messag to us by mail without copying it.

Any questions regarding compatibility should be directed to our Office Services Department at +1.703.836.6620

Patent
Attorney's Docket No. 024444-902

IN THE UNITED STATES PATENT AND TRADEMARK OFFICE

In re Patent Application of	)	
	)	
Mattias BERGLUND et al.	)	Group Art Unit: 3722
	)	
Application No.: 09/878,240	)	Examiner: Unassigned
	)	
Filed: June 12, 2001	)	Confirmation No.: 3796
	)	
For: TWO-PIECE ROTARY METAL-CUTTING TOOL AND METHOD FOR INTERCONNECTING THE PIECES	)	

REQUEST/PETITION TO ACCEPT MISSING PARTS AS BEING TIMELY FILED DUE TO NON-RECEIPT OF OFFICIAL COMMUNICATION

Commissioner for Patents
P.O. Box 1450
Alexandria, VA 22313-1450

Sir:

Applicants transmit herewith a copy of U.S. Patent No. 5,971,673 in double-column format pursuant to 37 C.F.R. §1.173(a)(1) for the above-identified application.

RELIEF REQUESTED

Applicants respectfully request that the attached patent copy be considered as being timely submitted, and that Applicants not be charged with an extension of time under the provisions of 37 C.F.R. § 1.17. To the extent that Applicants are charged with such an extension of time, this paper should be considered as a request for a refund of any charged extension of time fees in connection with the filing of missing parts in this application.

DOCKETED
filed 10-23-03 JS

A3

Should the application be considered abandoned, it is requested that the holding of abandonment be withdrawn.

STATEMENT OF PERTINENT FACTS

On June 12, 2001, Applicants' representative prepared and filed the present application in the U.S. Patent and Trademark Office. The application was accompanied by a copy of the above-mentioned patent, a transmittal form, a Preliminary Amendment, a check in the amount of $950.00, a Declaration in Support of Reissue, an offer to surrender the patent, and assent of the assignee, Power of Attorney and a statement under 37 C.F.R. §3.73(b) (see, e.g., the Reissue Patent Application Transmittal Letter submitted with said application on June 12, 2001).

On July 23, 2001, Applicants received a Filing Receipt having a mailing date of July 18, 2001.

On October 1, 2001, Applicants filed a Supplemental Declaration in Support of Reissue.

On November 5, 2001, Applicants received a Notice of Publication of Application.

Having not received any further communications from the Patent Office, Applicants filed a written Status Inquiry on December 16, 2002. To date, there has been no reply to Applicants' Status Inquiry.

On September 8, 2003, Applicants' representative contacted the Office of Initial Patent Examination (OIPE) by telephone to inquire about the status of the application.

Subsequent calls were also placed on September 24, 2003 and September 29, 2003, also attempting to ascertain the status of the case.

On October 14, 2003, Applicants' representative spoke by telephone with Ms. Linda McDowell, who was able to ascertain from the file that, according to the Patent Office's records, a Notice to File Missing Parts was mailed to Applicants on July 18, 2001, and that no response to the Notice has been received from the Applicants. Applicants' representative requested that a copy of the Notice be faxed to him. Apparently, the actual Notice to File Missing Parts is also absent from the Patent Office file, however, Applicants did receive a copy of a Reissue Supplement to a Notice to File Missing Parts of Application with a mailing date of July 18, 2001. A copy of this document (received on October 14, 2003) is attached.

Applicants never received a copy of the Notice to File Missing Parts or the Reissue Supplement, prior to October 14, 2003.

Attached to this paper is a copy of Applicants' representative's docket record in which any such Notice to File Missing Parts with a mailing date of July 18, 2001 would have been recorded for this application (Attorney reference 024444-902) if received. As indicated by the attached record, no such Notice was ever recorded. The attached docket record has been redacted to protect clients' confidential information.

Thus, Applicants have established non-receipt of the Official Communication pursuant to the procedures outlined, for example, in MPEP § 711.03(c).

DISCUSSION

Based on the above, it is clear that Applicants' representative did not receive a Notice to File Missing Parts in the above-identified application.

Upon detection of the error, the attached response supplying the missing requirements in the above-identified application have been timely prepared and filed.

Therefore, Applicants respectfully request that the attached patent copy be considered as having been timely filed and that no extensions of time be charged under the circumstances discussed above.

While Applicants do not believe that a petition is necessary under the circumstances, to the extent that the relief requested requires a petition, this paper should be considered as a Petition pursuant to the provisions of 37 C.F.R. § 1.181 to accept the attached patent copy as satisfying the requirements for filing the above-identified application in a timely manner and/or to withdraw a holding of abandonment. Applicants' representative hereby authorizes any necessary charges in connection with this Request/Petition to be charged to Applicants' representative's Deposit Account No. 02 4800, and to credit Applicants' representative's Deposit Account with any refunds or overcharges.

CONCLUSION

For these reasons noted above, Applicants respectfully request the attached patent copy be accepted without a charge for a petition and/or an extension of time. Should any further questions arise with regard to the above, it is requested that the undersigned be

contacted so that any such issues may be adequately addressed and prosecution of the instant application expedited.

Respectfully submitted,

BURNS, DOANE, SWECKER & MATHIS, L.L.P.

Date: October 23, 2003

By: Scott W. Cummings
Registration No. 41,567

P.O. Box 1404
Alexandria, Virginia 22313 1404
(703) 836-6620

This Page Is Inserted by IFW Operations
and is not a part of the Official Record

BEST AVAILABLE IMAGES

Defective images within this document are accurate representations of the original documents submitted by the applicant.

Defects in the images may include (but are not limited to):

- BLACK BORDERS
- TEXT CUT OFF AT TOP, BOTTOM OR SIDES
- FADED TEXT
- ILLEGIBLE TEXT
- SKEWED/SLANTED IMAGES
- COLORED PHOTOS
- BLACK OR VERY BLACK AND WHITE DARK PHOTOS
- GRAY SCALE DOCUMENTS

IMAGES ARE BEST AVAILABLE COPY.

As rescanning documents *will not* correct images, please do not report the images to the Image Problem Mailbox.

UNITED STATES PATENT AND TRADEMARK OFFICE

COMMISSIONER FOR PATENTS
UNITED STATES PATENT AND TRADEMARK OFFICE
WASHINGTON, D.C. 20231
www.uspto.gov

Application Number: 09/878240

Attachment to Paper No.:

Date Mailed 07/18/01

REISSUE SUPPLEMENT
NOTICE TO FILE MISSING PARTS OF APPLICATION

This Reissue Supplement is an attachment to:

☐ "Notice to File Missing Parts of Application" Filing Date Granted

☐ "Notice of Incomplete Application" No filing Date Granted

The item(s) indicated below as missing must be filed within the period for reply set on the attached form to avoid abandonment.

Correction of the following is required to complete the reissue application:

☑ 1. The reissue specification has not been provided in double-column format as is required by 37 CFR 1.173(a)(1).

☐ 2. Consent of the assignee is missing. 37 CFR 1.172 requires that the reissue oath/declaration be accompanied by the written consent of all assignees.

☐ 3. Consent of the assignee is present, but is unsigned. A statement of consent bearing the signature of an official authorized to act on behalf of the assignee(s) must be provided.

☐ 4. Assignee's statement under 37 CFR 3.73(b) establishing ownership of the patent is missing. 37 CFR 1.72 requires that all assignees consenting to the reissue establish their ownership interest in the patent by filing in the reissue application a statement in accordance with 37 CFR 3.73(b). See MPEP Sec. 324.

☐ 5. Assignee's statement under 37 CFR 3.73(b) is present, but is unsigned. A 37 CFR 3.73(b) statement bearing the signature of an official authorized to act on behalf of the assignee must be provided.

C. M. Lyons

Customer Service Center
Initial Patent Examination Division (703) 308-1202

RECEIVED
OCT 14 2003

BURNS DOANE
SWECKER & MATHIS, LLP.

Urgent Global Docket

Printed: 9/18/01 Through: 9/19/01 Page

DUE	ATTY1/ATTY2 PARA	REFERENCE#	TITLE / MARK	CLIENT	REG/SERIAL#	ACTION	CURRENT EXT	EXT AVAILAB
September continued...								
18 Tue	RSS/EPS/—	033275-092	[redacted]			Issue Fee Due	0	Nc
18 Tue	MAD/MAD/—	033352-008	[redacted]			SC -File Application	0	11 Ext/1 Mı
18 Tue	RLG/SMD/—	040010-899	[redacted]			Notify Client of FF	0	Nc
18 Tue	RLG/SWP/BLB	040010-938	[redacted]			Ask Client re FF	0	No
18 Tue	RLG/MGS/—	040020-268.002	[redacted]			Missing Parts (2 Mo)	0	5 Ext/1 Mı
ue	RLG/MGS/TXT	040020-270.001	[redacted]			Missing Parts (2 Mo)	0	5 Ext/1 Mı
18 Tue	RLG/KBL/PLC	040070-622	[redacted]			Subst Declaration	2	1 Ext/1 Mn
18 Tue	RLG/KBL/PLC	040071-114	[redacted]			30 Mo Instruct Req	0	Nor
18 Tue	RLG/KBL/PLC	040071-118	[redacted]			30 Mo Instruct Req	0	Nor
18 Tue	RLG/KBL/SMS	040071-693	[redacted]			Missing Parts (2 Mo)	0	5 Ext/1 Mnt
19 Wed	EJG/—/—	000348-199	[redacted]			Missing Parts (2 Mo)	1	4 Ext/1 Mnt
'ed	PNM/—/—	000400-864	[redacted]			File Convention Appt	0	Non
19 Wed	GFS/LJB/—	000475-235	[redacted]			Response to OA	3	Non
19 Wed	RLG/DMM/—	000500-296	[redacted]			Missing Parts (2 Mo)	0	5 Ext/1 Mntl
9 Wed	RLG/—/—	000510-007	[redacted]			SC - Filing Receipt	0	Non
9 Wed	RLG/WCR/—	000515-175	[redacted]			Response to OA	0	3 Ext/1 Mntl
9 Wed	RGM/SMD/—	000951-138	[redacted]			Missing Parts (2 Mo)	0	5 Ext/1 Mnth
9 Wed	RLG/BSD/KLW	001560-371	[redacted]			Final Rejection Resp	0	3 Ext/1 Mnth

NOV-18-2003 18:06 BURNS DOANE 703 836 2021 P.21/23

Urgent Global Docket

Printed: 9/18/01 Through: 9/19/01 Page

DUE	ATTY1/ATTY2 PARA	REFERENCE#	TITLE / MARK	CLIENT	REG/SERIAL#	ACTION	CURRENT EXT	EXT AVAILABI
18 Tue	JAL/—/—	032326-068	[redacted]			SC - 1st OA	0	No
18 Tue	JAL/—/—	032326-098	[redacted]			Notify Client of FF	0	No
18 Tue	WCR/—/—	032364-007	[redacted]			Inf Disclosure Stmt	1	2 Ext/1 Mr
18 Tue	JWP/CAL/—	032405-053	[redacted]			Inf Disclosure Stmt	0	3 Ext/1 Mn
18 Tue	GAH/CAL/—	032423-003	[redacted]			Cor of Ntc of Record	0	
18 Tue	JWP/WLW/—	032535-034	[redacted]			30 Mo Instruct Req	0	Nor
18 Tue	RLG/SWC/—	032566-011	[redacted]			Inf Disclosure Stmt	0	3 Ext/1 Mn
18 Tue	CAL/—/—	032580-003	[redacted]			Notify Client of FF	1	Nor
18 Tue	REK/—/—	032660-018	[redacted]			SC -File Application	1	Nor
18 Tue	JWP/PCK/—	032758-003	[redacted]			SC -File Application	8	3 Ext/1 Mnt
18 Tue	REK/KJM/—	032802-005	[redacted]			Response to OA	0	3 Ext/1 Mnt
18 Tue	HRB/—/—	032944-055	[redacted]			Inf Disclosure Stmt	0	3 Ext/1 Mnt
18 Tue	REK/—/—	033076-001	[redacted]			SC -File Application	0	1 Ex
18 Tue	GFS/LJB/—	033136-166	[redacted]			File Convention Appl	0	Non
18 Tue	NHS/—/—	033168-004	[redacted]			Notify Client of FF	0	Non
8 Tue	CFW/—/—	033261-009	[redacted]			Inf Disclosure Stmt	2	1 Ext/1 Mnt
8 Tu	CFW/—/—	033261-010	[redacted]			Inf Disclosure Stmt	2	1 Ext/1 Mnt
8 Tue	CFW/—/—	033261-012	[redacted]			Inf Disclosure Stmt	2	1 Ext/1 Mnt
8 Tue	RSS/SWC/—	033275-062	[redacted]			Notice of Appeal	0	3 Ext/1 Mnth
8 Tue	RSS/SWC/—	033275-062	[redacted]			Final Rejection Resp	0	3 Ext/1 Mnth

NOV-18-2003 18:06 BURNS DOANE 703 836 2021 P.20/23

Urgent Global Docket

Printed: 9/16/01 Through: 9/19/01 Page

DUE	ATTY1/ATTY2 PARA	REFERENCE#	TITLE / MARK	CLIENT	REG/SERIAL#	ACTION	CURRENT EXT	EXT AVAILABLE
September continued...								
8 Tue	PNM/DHP/—	027260-471	[redacted]			Inf Disclosure Stmt	0	3 Ext/1 Mnt
8 Tue	RLG/MGS/—	027540-295	[redacted]			Status Check	0	Non
8 Tue	RLG/ARB/—	028870-145	[redacted]			Annuity Due	0	1 Ext/6 Mnt
8 Tue	RLG/ARB/—	028870-198	[redacted]			Annuity Due	0	2 Ext/6 Mnt
8 Tue	RLG/ARB/—	028870-201	[redacted]			Annuity Due	0	1 Ext/6 Mnth
Tue	RLG/ARB/—	028870-201	[redacted]			Request Exam Due	0	None
3 Tue	RLG/ARB/—	028870-202	[redacted]			Annuity Due	0	1 Ext/6 Mnth
Tue	REK/PCK/—	029300-274	[redacted]			Action Needed	0	None
Tue	AEK/—/—	029866-008	[redacted]			Filing Details	0	None
Tue	CFW/JLC/—	030681-140	[redacted]			SC - Issue Notify	0	None
Tue	CFW/—/—	030681-158	[redacted]			Response to OA	0	3 Ext/1 Mnth
Tue	CFW/—/—	030681-309	[redacted]			Inf Disclosure Stmt	0	3 Ext/1 Mnth
Tue	REK/MDR/—	031994-025	[redacted]			Notice of Appeal	0	3 Ext/1
Tue	REK/MDR/—	031994-025	[redacted]			Final Rejection Resp	0	3 Ext/1 Mnth
Tue	REK/—/—	031994-183	[redacted]			Resp to Invitation	0	1 Ext/1 Mnth
Tue	REK/JPO/—	032001-031	[redacted]			SC - 1st OA	1	None
Tue	REK/—/—	032001-050	[redacted]			SC -File Application	8	3 Ext/1 Mnth
Tue	REK/AJC/—	032005-097	[redacted]			Inf Disclosure Stmt	1	2 Ext/1 Mnth
Tue	EJG/—/—	032013-023	[redacted]			SC - 1st OA	0	None
Due	WCR/AQE/—	032224-008	[redacted]			Response to OA	0	None

NOV-18-2003 18:05 BURNS DOANE 703 836 2021 P.19/23

Urgent Global Docket

Printed: 9/18/01 Through: 9/19/01

DUE	ATTY1/ATTY2 PARA	REFERENCE#	TITLE / MARK	CLIENT	REG/SERIAL#	ACTION	CURRENT EXT	EXT AVAILABL
September continued...								
18 Tue	REK/GFS/RMH	018240-042	[redacted]			SC -File Application	1	Non
18 Tue	PNM/HRB/—	018976-197	[redacted]			Inf Disclosure Stmt	0	3 Ext/1 Mn
18 Tue	PNM/RGM/—	019519-308	[redacted]			Inf Disclosure Stmt	2	1 Ext/1 Mn
18 Tue	RLG/—/—	019570-174.001	[redacted]			Notice of Appeal	1	2 Ext/1 Mn
18 Tue	SCM/TSR/DMG	020600-285	[redacted]			Response to OA	1	2 Ext/1 Mn
18 Tue	PKS/—/—	021238-293	[redacted]			Ask Client re FF	0	
18 Tue	PKS/—/—	021238-298	[redacted]			Lts Pat Received?	1	5 Ext/1 Mnt
18 Tue	PKS/—/—	021238-308	[redacted]			SC -File Application	9	2 Ext/1 Mnt
18 Tue	NHS/MKB/—	022650-451	[redacted]			Missing Parts (2 Mo)	3	2 Ext/1 Mnt
8 Tue	TSR/MKM/CLN	022927-008	[redacted]			Notice of Appeal	0	3 Ext/1 Mnt
8 Tue	TSR/MKM/CLN	022927-008	[redacted]			Final Rejection Resp	0	3 Ext/1 Mnt
8 Tue	PNM/JAL/—	024060-102.001	[redacted]			SC - 1st OA	0	None
8 Tue	RLG/SWC/—	024444-560	[redacted]			Notice of Appeal	0	3 Ext/1 Mnt
8 Tue	RLG/SWC/—	024444-560	[redacted]			Final Rejection Resp	0	3 Ext/1
Tue	BSD/—/—	025200-041	[redacted]			Ask Client re FF	0	None
3 Tue	RES/RJM/—	025220-005	[redacted]			Secrecy Renewed?	0	None
3 Tue	RES/RJM/—	025220-012.001	[redacted]			Secrecy Renewed?	0	None
3 Tue	RES/RJM/—	025220-027	[redacted]			Secrecy Renewed?	0	None
3 Tue	JWP/CHJ/—	025265-144	[redacted]			Notice of Appeal	2	1 Ext/1 Mnth
Tue	RLG/MGS/DXT	026125-071	[redacted]			File Utility Appln	0	None
Tue	GFS/MAD/MAD	026579-340	[redacted]			SC -File Application	6	5 Ext/1 Mnth

NOV-18-2003 18:05 BURNS DOANE 703 836 2021 P.18/23

Urgent Global Docket

Printed: 9/18/01 Through: 9/19/01 Page

DUE	ATTY1/ATTY2 PARA	REFERENCE#	TITLE / MARK	CLIENT	REG/SERIAL#	ACTION	CURRENT EXT	EXT AVAILAB
September continued...								
18 Tue	WLM/—/—	004612-049	[redacted]			Response to OA	0	3 Ext/1 M
18 Tue	NHS/TRW/IAS	004895-002	[redacted]			Appeal Brief Due	1	4 Ext/1 M
18 Tue	BSD/—/—	006450-301	[redacted]			SC - Office Action	0	Nc
18 Tue	PNM/RSJ/EME	006838-030	[redacted]			Response to OA	2	1 Ext/1 Mi
18 Tue	JAU/[illegible]	007198-423	[redacted]			SC -File Application	0	Nc
ue	RDH/BJB/—	008111-006	[redacted]			Response to OA	2	1 Ext/1 Mr
18 Tue	SCM/—/—	008608-014	[redacted]			SC - 1st OA	0	No
18 Tue	AEK/—/—	009743-003	[redacted]			SC -File Application	8	3 Ext/1 Mr
18 Tue	RLG/WCR/—	010315-145	[redacted]			Missing Parts (2 Mo)	0	5 Ext/1 Mr
18 Tue	BJB/AEK/—	013550-077	[redacted]			SC - File Appln	7	4 Ext/1 Mn
18 Tue	WCR/—/—	015291-024	[redacted]			Response to OA	0	3 Ext/1 Mn
18 Tue	CFW/—/—	015955-006	[redacted]			SC - Missing Parts	0	Nor
18 Tue	EJG/JDB/IAS	016499-339	[redacted]			Missing Parts (2 Mo)	0	5 Ext/1 Mn
18 Tue	EJG/—/—	016499-487	[redacted]			SC - File Appln	5	6 Ext/1 Mnt
18 Tue	FGM/PCK/—	017750-508	[redacted]			SC - File Appln	11	Non
18 Tue	TGD/RS/[illegible]	018176-325	[redacted]			Action Needed	1	Non
8 Tue	REK/GFS/RMH	018240-029	[redacted]			SC -File Application	1	Non
8 Tue	REK/GFS/PFH	018240-030	[redacted]			SC -File Application	10	1 Ext/1 Mntl
8 Tue	REK/GFS/RMH	018240-040	[redacted]			SC -File Application	0	1 Ext/ Mntl
8 Tue	REK/GFS/RMH	018240-041	[redacted]			SC -File Application	1	Non

NOV-18-2003 18:05 BURNS DOANE 703 836 2021 P.17/23

Urgent Global Docket

Printed: 9/18/01 Through: 9/19/01 Page

DUE	ATTY1/ATTY2 PARA	REFERENCE#	TITLE / MARK	CLIENT	REG/SERIAL#	ACTION	CURRENT EXT	EXT AVAILAB
September '01								
03 Mon	RLG/KBL/CJB	040070-424	[redacted]			FFAR	1	No
09 Sun	REK/KS/—	032491-015	[redacted]			Demand for Chapter 2	0	No
13 Thu	MAD/—/—	032055-019	[redacted]			30 Mo Instruct Req	0	No
15 Sat	GFS/—/—	002010-651	[redacted]			Power Attorney Due	1	No
15 Sat	GFS/—/—	002010-651	[redacted]			Assignment Due	1	No
15 Sat	JWP/CHJ/—	025265-204	[redacted]			SC -File Application	0	No
15 Sat	TGD/TSR/DHY	028722-266	[redacted]			Response to OA	3	No
15 Sat	AXW/—/DBM	032390-053	[redacted]			Resp to Invitation	0	No
15 Sat	REK/—/—	032493-051	[redacted]			Response Due	0	No
15 Sat	GFS/RMH/—	032978-016	[redacted]			Notice of Appeal	3	No
at	RLG/SWP/PCM	040000-552	[redacted]			FFAR	1	
16 Sun	REK/—/—	010063-086	[redacted]			Resp to Written Opn	0	Non
17 Mon	RLG/KBL/SMS	027557-099	[redacted]			SC -File Application	0	Non
7 Mon	TGD/KJM/—	033297-100	[redacted]			SC -File Application	0	Non
8 Tue	PNM/—/—	000400-866	[redacted]			File Convention Appl	0	Non
8 Tue	GFS/MAD/MAD	000476-117	[redacted]			Action Needed	0	Non
8 Tue	RLG/MGS/MJC	000500-103	[redacted]			Final Rejection Resp	0	3 Ext/1 Mnt

NOV-18-2003 18:04 BURNS DOANE 703 836 2021 P.15/23

US005971673A

United States Patent [19]

Berglund et al.

[11] Patent Number: 5,971,673

[45] Date of Patent: Oct. 26, 1999

[54] TWO-PIECE ROTARY METAL-CUTTING TOOL AND METHOD FOR INTERCONNECTING THE PIECES

[75] Inventors: Mattias Berglund, Njutånger; Fredrik Lundberg, Askersund; Ingela Svensson, Linköping, all of Sweden

[73] Assignee: Seco Tools AB, Fagersta, Sweden

[*] Notice: This patent is subject to a terminal disclaimer.

[21] Appl. No.: 09/159,584

[22] Filed: Sep. 24, 1998

Related U.S. Application Data

[63] Continuation of application No. 08/929,462, Sep. 15, 1997.

[30] Foreign Application Priority Data

Sep. 13, 1996 [SE] Sweden 9603325

[51] Int. Cl.[6] B23B 51/00

[52] U.S. Cl. ..... 408/1 R; 76/108.6; 408/144; 408/226; 408/230; 408/231

[58] Field of Search ..... 408/1 R, 144, 408/199, 200, 226, 227, 230, 231, 232; 76/108.6, 108.1

[56] References Cited

U.S. PATENT DOCUMENTS

932,071	8/1909	Urbscheit	408/233
2,259,611	10/1941	Burger .	
2,935,906	5/1960	Andreasson	408/144
3,359,837	12/1967	Andreasson	408/230
3,548,688	12/1970	Kuch	408/230
4,950,108	8/1990	Roos	408/230
5,399,051	3/1995	Aken et al.	408/226

FOREIGN PATENT DOCUMENTS

0 118 806	11/1987	European Pat. Off. .
367 010	1/1921	Germany .

Primary Examiner—Daniel W. Howell

Attorney, Agent, or Firm—Burns, Doane, Swecker & Mathis, L.L.P.

[57] ABSTRACT

A tool includes a tool body and a cutting portion detachably mounted thereon, the tool being rotatable about a longitudinal center axis. The tool body includes flutes formed in an outer surface thereof, and a pair of forward projections at a front end thereof. The cutting portion includes front flutes formed in an external side thereof, and a pair of recesses extending circumferentially in communication with respective ones of the front flutes. To connect the cutting portion to the tool body, the cutting portion and tool body are converged longitudinally so that the projections enter the front flutes. Then, relative rotation is produced between the cutting portion and tool body to align the front flutes with the rear flutes while causing the projections to enter the recesses and form therewith a bayonet coupling.

15 Claims, 4 Drawing Sheets

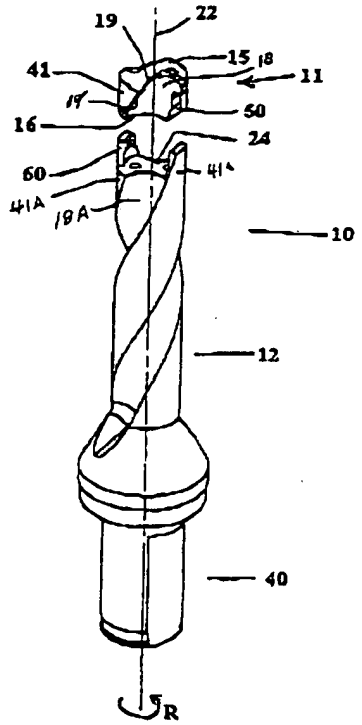

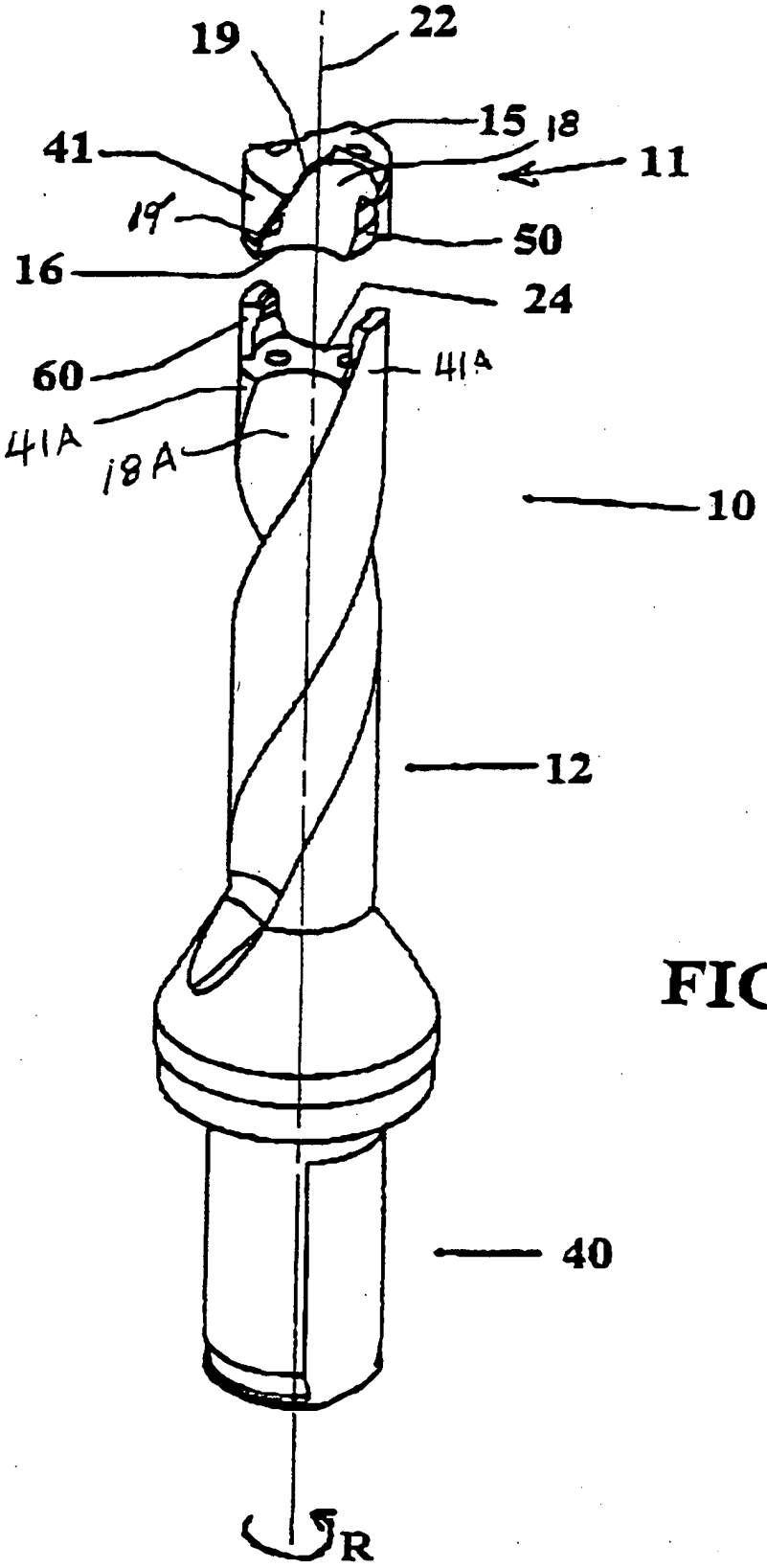

FIG. 1

Fig. 2

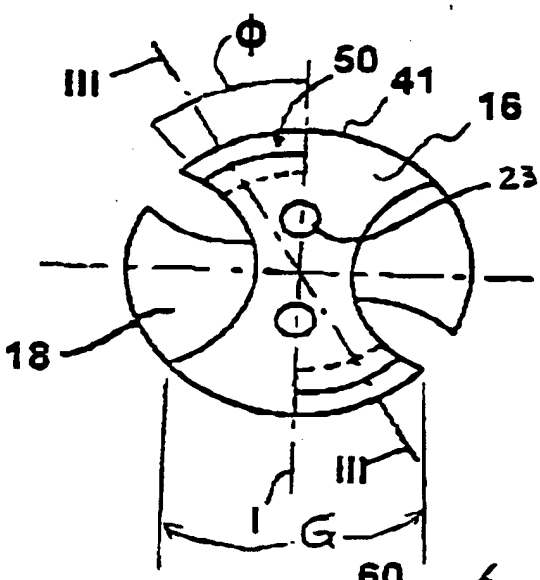

Fig. 3

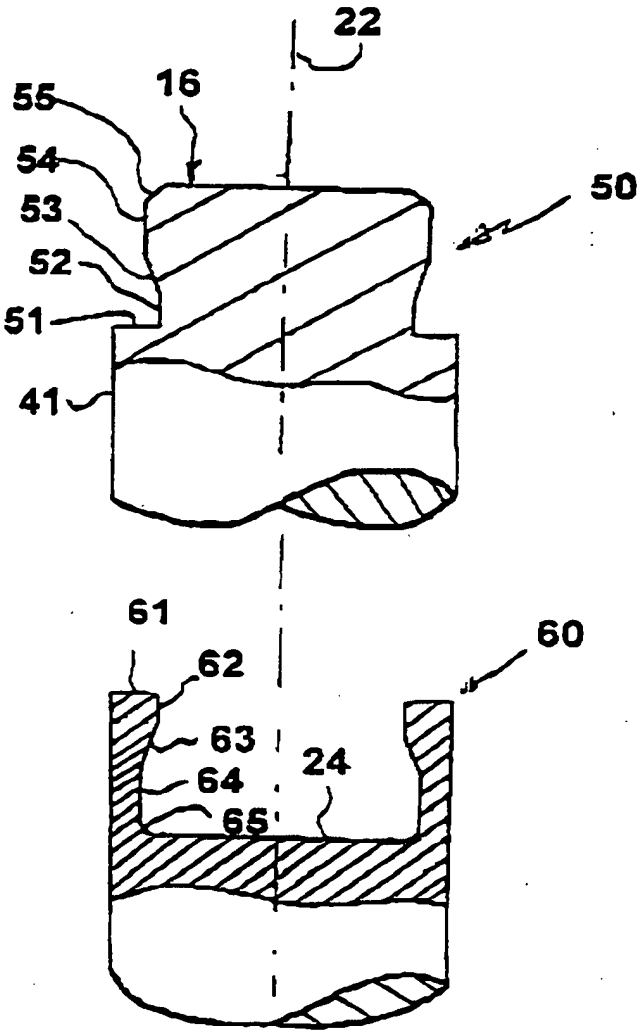

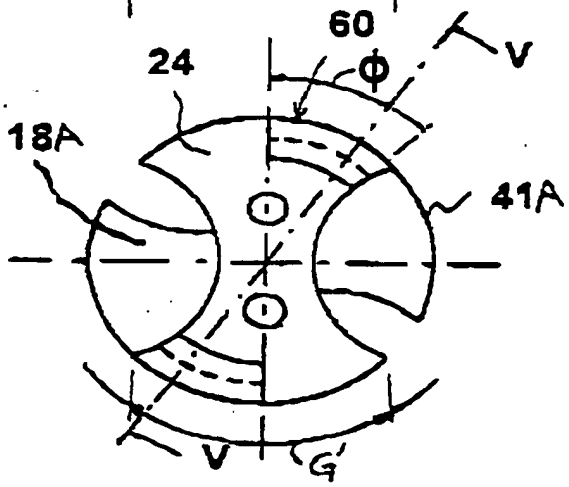

Fig. 4

Fig. 5

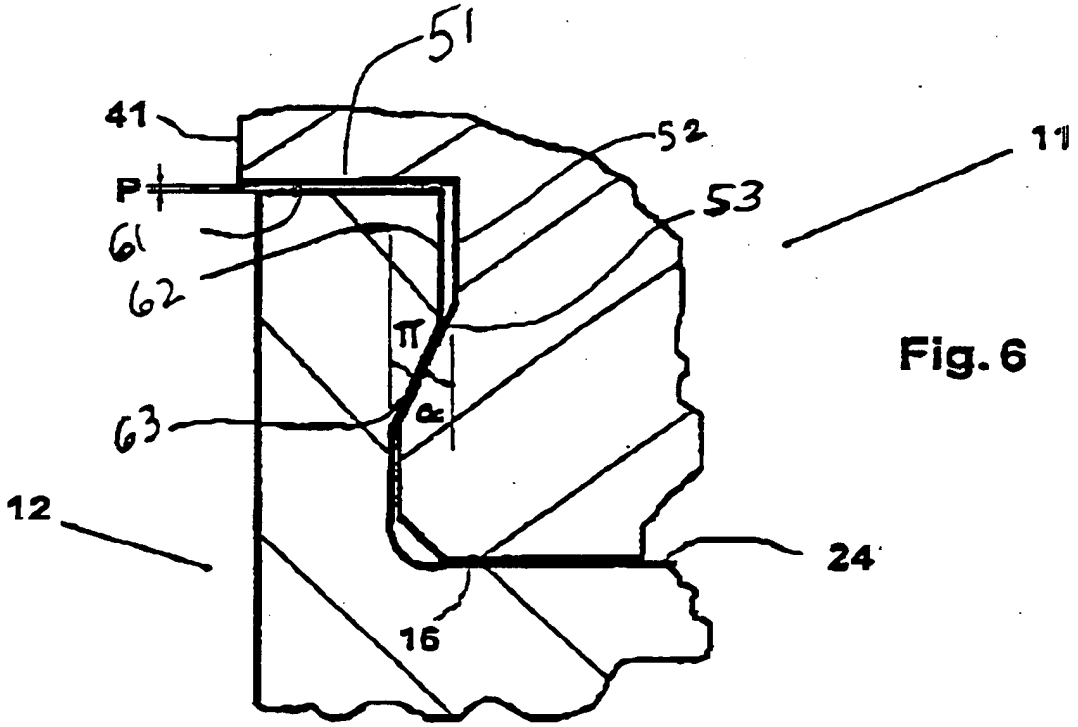

Fig. 6

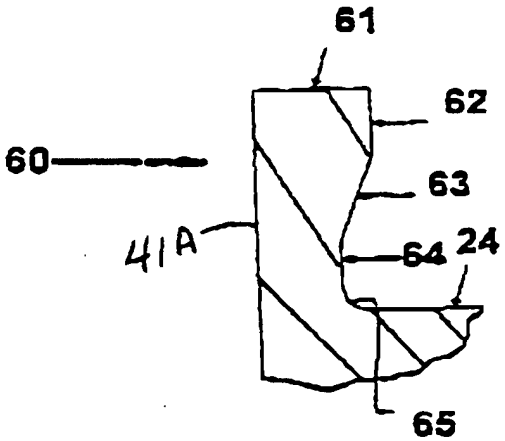

Fig. 7

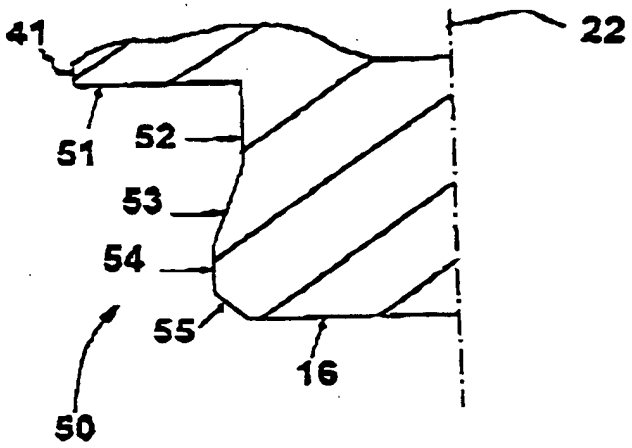

Fig. 8

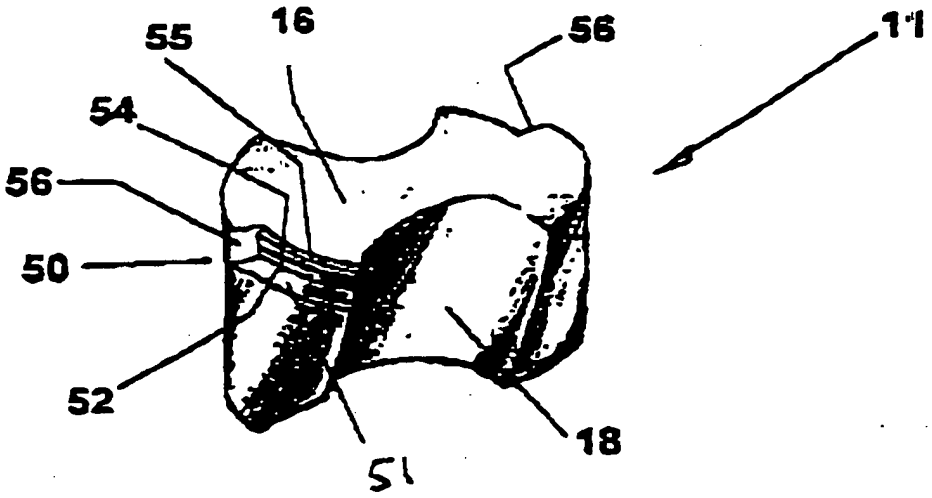

Fig. 3A

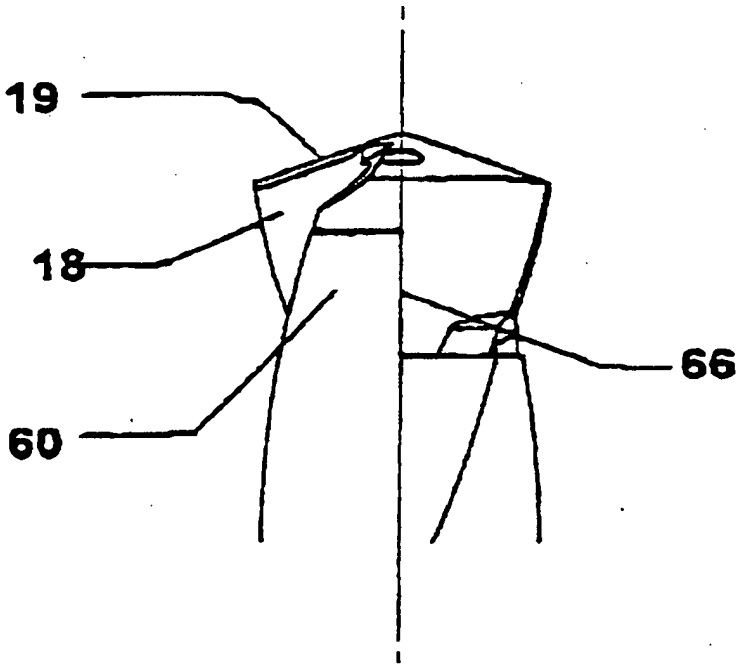

Fig. 9

TWO-PIECE ROTARY METAL-CUTTING TOOL AND METHOD FOR INTERCONNECTING THE PIECES

This application is a continuation of application Ser. No. 08/929,462, filed Sep. 15, 1997.

BACKGROUND OF THE INVENTION

The present invention relates to a tool for rotary, cutting machining, comprising a tool body and a cutting portion. The tool body has a front surface, and the cutting portion has a support surface provided to releaseably abut against the front surface in a substantially radial plane. The tool body and the cutting portion comprises means which cooperate for holding them together. The invention also relates to a cutting portion and a tool body as well as a method for mounting a cutting portion to a tool body.

PRIOR ART

It is previously known to use interchangeable cutting edges on different types of tools for cutting machining, especially when cutting a metallic workpiece. This technique however has practical limitations due to handling reasons when it comes to milling and drilling tools which rotate around a longitudinal axis.

Through DE-PS-367,010 and Burger U.S. Pat. No. 2,259,611, it is previously known to provide drills with lockable drill tips, wherein the drill tip is retained with the aid of dove-tail profiles or with press fit, respectively. The known tools however are impaired with drawbacks such as bad torsion transferring ability and troublesome mounting and dismounting.

The present invention has as one object to provide drilling and milling tools with interchangeable cutting edges, which eliminates problems associated with known techniques.

Another object with the present invention is provide a rigid tool preferably for drilling or milling wherein the cutting portion cooperates with the tool body via a bayonet coupling.

Another object of the present invention is to provide a rigid tool preferably for drilling or milling wherein the cutting portion can be easily exchanged by hand without time consuming screwing or soldering.

Another object of the present invention is to provide a tool with a self centering cutting portion.

SUMMARY OF THE INVENTION

These and other objects have been achieved by the present invention which relates to a rotary metal-cutting tool comprising, in combination, a tool body and a cutting portion attached to the tool body. The tool body includes a shank portion defining a longitudinal center axis, a front surface, and rear chip flutes formed in an external side surface of the shank portion for guiding chips rearwardly during a cutting operation. The cutting portion includes a rear support surface abutting the front surface, a front cutting face, and front chip flutes formed in a side surface of the cutting portion and intersecting the cutting face to form cutting edges therewith. The tool body and cutting portion are interconnected by a bayonet coupling formed by projections disposed on one of the tool body and cutting portion, and recesses formed in the other of the tool body and cutting portion. The projections are circumferentially offset with respect to the flutes and extend generally longitudinally. The recesses extend circumferentially from respective flutes. The flutes are sized to longitudinally receive respective projections during longitudinal insertion or removal of the cutting portion relative to the tool body. The cutting portion is rotatable about the center axis relative to the tool body to transfer the projections from the respective flutes and into the recesses while bringing the front flutes into alignment with the rear flutes.

The invention also relates to a method of mounting a cutting portion to a tool body to form a metal-cutting rotary tool. The tool body includes a shank portion, a front surface, and rear chip flutes formed in an outer surface of the tool body. The cutting portion includes a support surface abutting the front surface, a cutting surface having cutting edges, and front chip flutes formed in an outer surface of the cutting portion. One of the tool body and cutting portion includes longitudinal projections, and the other of the tool body and the cutting portion includes circumferential recesses. Each recess communicates with a respective flute and extends less than 180°. The method comprises the steps of:

A) converging the cutting portion and tool body longitudinally toward one another to bring the projections into respective ones of the flutes that communicate with the circumferential recesses; and

B) effecting relative rotation between the tool body and cutting portion to cause the projections to enter respective ones of the recesses to bring the front flutes into alignment with the rear flutes and to bring a stop surface of each projection into longitudinally opposing relationship with a stop surface of a respective recess for defining a bayonet connection preventing longitudinal displacement of the cutting portion relative to the tool body.

DESCRIPTION OF THE DRAWINGS

The objects and advantages of the invention will become apparent from the following detailed description of a preferred embodiment thereof in connection with the accompanying drawing in which like numerals designate like elements, and in which:

FIG. 1 shows a drilling tool according to the present invention, in an exploded perspective view;

FIG. 2 shows a cutting portion according to the present invention in a bottom view;

FIG. 3 shows the cutting portion in a sectional view taken along the line III—III in FIG. 2;

FIG. 3A shows the cutting portion in a perspective view from below;

FIG. 4 shows the forward end surface of a tool body according to the present invention in top view;

FIG. 5 shows the drill shank in a sectional view taken along the line V—V in FIG. 4;

FIGS. 6, 7 and 8 show cross-sections of a bayonet coupling of the tool;

FIG. 9 shows the assembled tool according to FIG. 1 in a magnified side view.

DETAILED DESCRIPTION OF A PREFERRED EMBODIMENT OF THE INVENTION

The embodiment of a tool 10 according to the invention shown in FIG. 1 is a so called helix drill, which comprises a cutting portion or drill tip 11 and a drill body 12. The drill has a rotational direction R.

The drill tip 11 is provided with at least one cutting edge 19 in the forward end thereof facing away from the drill body 12, which tip is given different designs depending on the area of application.

The drill tip 11 is made of hard material, preferably cemented carbide and most preferably of injection molded cemented carbide, and comprises a front cutting surface formed by two upper clearance faces 15, a lower support surface 16 as well as first and second curved surfaces 41, 18 interconnecting the surfaces 15 and 16. All these surfaces and associated edges are integrated as one piece with the drill tip and consequently formed of the same material, i.e. preferably injection molded cemented carbide. The curved surfaces 18 form front chip flutes for conducting cuttings rearwardly. Lines of intersection between the chip flutes 18 and the clearance faces 15 form main cutting edges 19, preferably via reinforcing chambers, not shown. Lines of intersection between the first curved surfaces 41 and the chip flutes 18 form secondary cutting edges 19'. The chip flute is shown as helical but may alternatively be adapted for a drill body requiring straight chip flutes. The radially external parts between the chip flutes consist of protruding lands formed by the surfaces 41, each having a circumferential length G (FIG. 4). The largest diameter of the drill tip is the diametrical distance between the radially extreme points of the secondary cutting edges. The height of the drill tip is substantially the same as the largest diameter of the tip, in order to minimize the wear from chips on the joint between the drill tip and the drill body. Flushing holes 23, extending substantially parallel with the rotational axis 22, extend through the drill tip from the support surface 16 to the orifice in respective upper clearance surface 15.

The support surface 16 according to FIGS. 2, 3 and 3A is substantially planar but comprises a recess 50 at the transition between the support surface 16 and the land 41. Each recess 50 comprises a first free or end surface 51 perpendicularly connected to both the land 41 and a second free surface 52 (see FIG. 8), which surface 52 in turn forms an acute angle a with a first guiding surface 53 (see FIG. 6). The surface 53 connects to a second guiding surface 54 oriented parallel to the rotational axis 22, and which connects to the support surface 16 via a radius or an entering bevel 55. The surface 53 is inclined obliquely relative to the center axis 22 so as to face generally radially inwardly and longitudinally rearwardly. As illustrated in FIG. 3, support surface 16, recesses 50, and land 41 define a generally dovetail-shaped projection. The recess 50 has a stop surface 56 (FIG. 3A) which is parallel to the axis 22 and which suitably lies in an axial plane which intersects said axis. The recess 50 extends in a tangential direction from the chip flute 18 to about a midpoint of the circumferential length G of the associated land 41.

The drill body is made of a material which has a lower Young's modulus than cemented carbide. The drill body has helical rear chip flutes 18A (or straight chip flutes if required) and these can extend along the entire outer surface of a shank portion 40 of the body or along only a part thereof. The drill body 12 is provided with a front surface 24 at the end facing towards the drill tip 11, which surface 24 abuts against the support surface 16 of the drill tip 11. The largest diameter of the support surface 16 is larger than the largest diameter of the front surface 24 in order to minimize the wear from chips on the joint between the drill tip and the drill body. The drill body also includes curved surfaces 41A forming lands. The front surface 24 is substantially planar but comprises a projection 60 at the transition between the front surface 24 and the jacket surface of each land 41A. The height of the projection is somewhat less than that of the depth of the recess 50.

Each projection 60 comprises a first free or end surface 61 perpendicularly connected to the jacket surface 41A, said surface 61 also perpendicularly connected to a second free surface 62, which in its turn forms an acute angle π with a first guiding surface 63. The surface 63 connects to a second guiding surface 64 oriented parallel to the rotational axis 22. The surface 64 connects to the front surface 24 via a radius 65. The surface 63 is oriented parallel to the surface 53 so as to face generally radially outwardly and longitudinally forwardly. As illustrated in FIG. 5, the above-described surfaces, along with front surface 24, form a centrally disposed generally dovetail-shaped recess. The projection 60 has a stop surface 66, FIG. 9, which is parallel with the axis 22 and which suitably lies in an axial plane which contains said axis.

The smallest diameter of the front surface 24 is smaller than the largest diameter of the drill tip but larger than the smallest diameter of the drill tip. The projection 60 extends in a tangential direction from the chip flute 18A to about the midpoint of the circumferential tangential length G' of the associated land 41A.

The stop surfaces 56 and 66, respectively, should be as far from the rotational axis as possible for best moment transfer, i.e. they are arranged diametrically opposed each other. The drill tip must be symmetrically formed in order to retain the tool's concentricity at varying strain, i.e. in order to keep the drill tip centered relative to the drill body. The projections 60 and the recesses 50 lie at a distance from and substantially rearwardly of the associated cutting edge 19 in the tool's rotational direction R.

Mounting of the drill tip 11 on the drill body 12 is done as follows. The drill tip 11 is brought in the axial direction towards the drill body 12, so that each projection 60 is received in the associated chip flute 18 and so that the support surface 16 abuts against the front surface 24 thereby bringing the generally dove-tail shaped projection of the drill tip 11 into mating engagement with the generally dovetail-shaped recess of drill body 12. Then, the drill tip is rotated in the direction R within an angle interval ϕ which is less than 360°, preferably less than 60°, relative to the drill body so that each projection 60 moves with a slide fit in the respective recess 50 until the stop surfaces 56 and 66 abut against each other. The drill tip 11 is now anchored in the drill body 12 in a satisfactory manner. Thus, the preformed spaces defined by the chip flutes 18 are used as the entrance and the exit of the bayonet coupling.

When the drill tip 11 must be replaced, the mounting procedure is reversed. The drill tip 11 then can be removed from the drill body 12 and be exchanged, preferably with the aid of a suitable key in engagement with the chip flutes on the drill tip. The key is preferably also used during mounting of the drill tip.

The surfaces which during the drilling operation must be in engagement are surfaces 53 and 63 as well as the support surface 16 and the front surface 24. The surfaces 53 and 63 cooperate to hold the drill tip such that it cannot loosen in the feed direction, for example during retraction of the tool. The surfaces 53 and 63 are preferably designed such that their cooperation results in some elastic deflection of the projection 60 due to the slide fit. A limited contact surface between surfaces 54 and 64 can be allowed, but this implies an increased moment at the radius 65. The drill tip is self-centering in the tool body, i.e. it moves such that its axis coincides with the rotational axis 22 if it has been displaced during the machining operation. The surface 55 will allow the radius 65 of the tool body to be relatively large. The surfaces 52 and 62 should not be in engagement with each other during the machining operation. That is realized by

extending the surface 53 (see FIG. 6). The clearance surfaces 51 and 61 should not be in engagement with each other during the machining operation, and therefore a gap P is always present between them (see FIG. 6). The gap P is in the range of 0.1–1.0 mm. The support surface 16 will be pressed by the feed force against the front surface 24 during the machining operation, which means that the elastic deflection of the projection 60 tends to decrease somewhat, which however is counteracted because the projection 60 will be bent radially inwardly due to pressure on the front surface 24 from the feed force.

The invention is useable also for milling cutters. The drill tip is preferably coated with layers of, for example, Al_2O_3, TiN and/or TiCN. In certain cases, it can be well-founded to apply super hard material such as CBN or PCD on the cutting edges. Alternatively ceramic material can be used at injection molding of the drill tips.

Although the present invention has been described in connection with a preferred embodiment thereof, it will be appreciated by those skilled in the art that additions, modifications, substitutions and deletions not specifically described may be made without departing from the spirit and scope of the invention as defined by the appended claims.

What is claimed is:

1. A rotary metal-cutting tool comprising, in combination, a tool body and a cutting portion attached to the tool body;

the tool body including: a shank portion defining a longitudinal center axis, a front surface, and rear chip flutes formed in an external side surface of the shank for guiding chips rearwardly during a cutting operation;

the cutting portion including: a rear support surface abutting the front surface, a front cutting surface, and front chip flutes formed in a side surface of the cutting portion and intersecting the cutting face to form cutting edges therewith;

the tool body and cutting portion being interconnected by a dovetail-shaped bayonet coupling formed by projections disposed on one of the tool body and cutting portion, and recesses formed in the other of the tool body and cutting portion, the projections being circumferentially offset with respect to the flutes and extending generally longitudinally; the recesses extending circumferentially from respective flutes; the flutes sized to longitudinally receive respective projections during longitudinal insertion or removal of the cutting portion relative to the tool body; the cutting portion being rotatable about the center axis relative to the tool body to transfer the projections from the respective flutes into the recesses while bringing the front and rear flutes into mutual alignment.

2. The tool according to claim 1 wherein the recesses are formed in the cutting portion; and the projections are formed in the tool body.

3. The tool according to claim 1 wherein the recesses are formed in the outer surface of the cutting portion; the cutting portion being rotatable relative to the tool body by an angle less than 360 degrees.

4. The tool according to claim 3 wherein the angle is less than 60 degrees.

5. The tool according to claim 1 wherein each of the projections includes a first surface inclined obliquely relative to the center axis, the first surface facing generally radially inwardly and longitudinally rearwardly; each of the recesses including a second surface inclined obliquely relative to the center axis, the second surface facing generally radially outwardly and longitudinally forwardly and opposing a respective first surface to prevent relative longitudinal movement of the cutting portion relative to the tool body.

6. The tool according to claim 5 wherein a material from which the tool body is formed has a lower Young's modulus than a material from which the cutting portion is formed, to enable the projections to bend elastically in a radial direction during relative rotation between the cutting portion and tool body.

7. The tool according to claim 1 wherein each of the projections includes a first surface inclined obliquely relative to the center axis, the first surface facing generally radially inwardly and longitudinally rearwardly; each of the recesses including a second surface inclined obliquely relative to the center axis, the second surface facing generally radially outwardly and longitudinally forwardly and opposing a respective first surface to prevent relative longitudinal movement of the cutting portion relative to the tool body.

8. The tool according to claim 6 wherein the outer surface of the cutting portion defines a pair of lands extending circumferentially by equal distances between the front flutes, each of the recesses extending circumferentially for a distance of about one-half of the circumferential distance of a respective land, each of the projections extending circumferentially a distance substantially equal to that of a respective recess.

9. The tool according to claim 1 wherein each of the projections includes a first surface inclined obliquely relative to the center axis, the first surface facing generally radially inwardly and longitudinally rearwardly; each of the recesses including a second surface inclined obliquely relative to the center axis, the second surface facing generally radially outwardly and longitudinally forwardly and opposing a respective first surface to prevent relative longitudinal movement of the cutting portion relative to the tool body.

10. The tool according to claim 1 wherein each of the projections includes a forwardly facing end surface, and the recess includes a forwardly facing end surface, and the recess includes a rearwardly facing end surface spaced from the forwardly facing end surface by a gap.

11. A cutting portion adapted to be connected to a tool body for rotary metal cutting, comprising a front cutting surface having at least one cutting edge, a rear support surface, and at least one chip flute formed in a side surface of the cutting portion for guiding cuttings, said cutting portion including coupling means defining a dovetail-shaped projection and forming part of a bayonet coupling adapted to connect a tool body with the cutting portion.

12. The cutting portion according to claim 11 wherein the coupling means comprises a recess extending circumferentially less than 60 degrees.

13. A rotary drill comprising:

a drill body having a longitudinal axis and first and second opposed ends, one of said opposed ends comprising a centrally disposed dovetail-shaped recess, and at least two circumferentially spaced projections, each of said projections having a stop surface;

a replaceable drilling head having first and second opposed ends, one of said opposed ends comprising a cutting portion, and the other of said opposed ends comprising a dovetail-shaped projection, said drilling head further comprising at least one stop surface.

14. A method of attaching a drilling head to a drill body, said drill body having a longitudinal axis and first and second opposed ends, one of said opposed ends comprising a centrally disposed dovetail-shaped recess, and at least two circumferentially spaced projections, each of said projections having a stop surface; said drilling head having first

and second opposed ends, one of said opposed ends comprising a cutting portion, and the other of said opposed ends comprising a dovetail-shaped projection, said drilling head further comprising at least one stop surface; wherein said method comprises:

inserting said dovetail-shaped projection into said dovetail-shaped recess; and

rotating said drilling head relative to said drill body such that the at least one stop surface on said drilling head comes into engagement with at least one of the stop surfaces on one of the projections.

15. A method for mounting a cutting portion to a tool body to form a metal-cutting rotary tool; the tool body including a shank portion; a front surface, and rear chip flutes formed in an outer surface of the tool body; the cutting portion including a support surface abutting the front surface, a cutting surface having cutting edges, and front chip flutes formed in an outer surface of the cutting portion; one of the tool body and cutting portion including longitudinal

projections, and the other of the tool body and cutting portion including circumferential recesses, each recess communicating with a respective flute and extending less than 180 degrees; the method comprising the steps of:

A) converging the cutting portion and tool body longitudinally toward one another to bring the projections into respective ones of the flutes that communicate with the circumferential recesses; and

B) effecting relative rotation between the tool body and cutting portion to cause the projections to enter respective ones of the recesses to bring the front flutes into alignment with the rear flutes, and to bring a stop surface of each projection into longitudinally opposing relationship with a stop surface of a respective recess for defining a dovetail-shaped bayonet connection preventing longitudinal displacement of the cutting portion relative to the tool body.

* * * * *

UNITED STATES PATENT AND TRADEMARK OFFICE

UNITED STATES DEPARTMENT OF COMMERCE
United States Patent and Trademark Office
Address: COMMISSIONER FOR PATENTS
P.O. Box 1450
Alexandria, Virginia 22313-1450
www.uspto.gov

December 4, 2003

Scott W. Cummings
Burns, Doane, Swecker & Mathis
P.O. Box 1404
Alexandria, VA 22313 1404

In re application of:
Mathias Berglund et al DECISION ON PETITION
Serial No.: 09/878,240
Filed: June 12, 2001
For: TWO-PIECE ROTARY METAL-CUTTING TOOL AND METHOD FOR INTERCONNECTING THE PIECES

This is a decision on the petition received by fax on November 18, 2003, to withdraw the holding of abandonment in the above-identified application.

The above-identified application became abandoned for failure to reply within the meaning of 37 C.F.R. 1.113 in timely manner to the Reissue Supplement Notice to File Missing Parts of Application mailed on July 18, 2001. Which set a shortened statutory period for reply of two (2) months. Accordingly, this application became abandoned September 19, 2001.

On November 18, 2003, the office received a communication from the attorney of record. Enclosed was an acknowledgement that the attorney never received the Reissue Supplement Notice to File Missing Parts Application mailed on July 18, 2001.

The petition is hereby GRANTED.

The evidence submitted is sufficient to establish that the petitioners did not received the Reissue Supplement Notice to File Missing Parts Application mailed on July 18, 200l.

The application will be complete with the faxed documents received on October 1, 2001 and released to Technology Center 3722.

The Office regrets any inconvenience this may have caused the client.

Telephone inquiries concerning this matter may be directed to Doshie E. Day
(703) 308-3640.

Doshie Day

Doshie E. Day
Program Management Assistant
Office initial Patent Examination

UNITED STATES PATENT AND TRADEMARK OFFICE

COMMISSIONER FOR PATENTS
UNITED STATES PATENT AND TRADEMARK OFFICE
P.O. BOX 1450
ALEXANDRIA, VA 22313-1450
www.uspto.gov

PATTERSON, THUENTE, SKAAR & CHRISTENSEN, P.A.
4800 IDS CENTER
80 SOUTH 8TH STREET
MINNEAPOLIS MN 55402-2100

COPY MAILED

SEP 08 2009

OFFICE OF PETITIONS

In re Application of
Dewar
Application No. 09/878,245
Filed: June 12, 2001
Atty. Dkt. No.: 2951.03US02

: LETTER REGARDING PTA

This letter is in response to the "PATENT TERM ADJUSTMENT LETTER OF CANDOR AND GOOD FAITH," filed July 16, 2009. The Office thanks applicants for their good faith and candor in bringing this to our attention.

The Determination of Patent Term Adjustment mailed June 25, 2009 indicated that the above-identified application was entitled to a patent term adjustment ("PTA") of 1,063 days. Applicant indicates that this adjustment does not reflect 77 days of applicant reduction in connection with supplemental replies filed April 7, 2006 and June 17, 2009. Applicant further indicates that the adjustment may have improperly accorded an adjustment of 120 days in connection with the mailing of a non-final Office action on June 18, 2007 in response to the corrected appeal brief filed February 12, 2007.

The correct Patent Term Adjustment ("PTA") at the time of the allowance is 872 days.

The application was properly accorded an adjustment of 1,142 days in accordance with 37 CFR 1.702(a)(1).

As indicated by applicant, the application was errantly accorded an adjustment of 120 days in connection with the non-final Office action mailed June 18, 2007. An appeal brief was filed October 18, 2006. A Notice of Defective Appeal Brief was mailed January 12, 2007. A corrected appeal brief was filed February 12, 2007. Thus, in accordance with 37 CFR 1.702(a)(2), the application is entitled to an additional adjustment of six days, not 120 days. The adjustment commenced June 13, 2007, the day after the date that is four months after the date that the corrected appeal brief was filed, and ended June 18, 2007, the date that the non-final Office action was mailed. See, 37 CFR 1.703(a)(4).

The adjustment was properly reduced 199 days in accordance with 37 CFR 1.704(b). However, as indicated by applicant, the Office neglected to assess reductions in connection with the supplemental replies filed April 7, 2006 and June 17, 2009.

In accordance with 37 CFR 1.704(c)(8), the adjustment is properly reduced 70 days. The reduction commenced January 28, 2006, the day after the date that the initial reply to the non-

final Office action dated September 27, 2005 was filed, and ended April 7, 2006, the date that the supplemental reply (IDS) was filed.

In accordance with 37 CFR 1.704(c)(8), the adjustment is properly reduced seven days in connection with the supplemental reply filed June 17, 2009. The reduction commenced June 11, 2009, the day after the date that the reply to the final Office action dated March 13, 2009 was filed, and ended June 17, 2009, the date that the supplemental reply (IDS) was filed.

Accordingly, at the time of allowance, the application is entitled to an adjustment of 872 days (adjustments totalling 1,148 days less reductions totalling 276 days).

As applicants are advising us of a potential error in providing too much patent term adjustment in this application, no fee is due in connection with this matter.

The patent term adjustment indicated in the patent will include any additional patent term accrued pursuant to §§ 1.702(a)(4) and 1.702(b).

This application is being forward to the Office of Data Management for issuance of the patent.

Telephone inquiries specific to this decision should be directed to the undersigned at (571) 272-3205.

Alesia M. Brown
Petitions Attorney
Office of Petitions

Enclosure: Copy of Adjustment PAIR Calculation

PALM INTRANET

Day : Monday
Date: 9/7/2009
Time: 08:22:33

PTA Calculations for Application: 09/878245			
Application Filing Date:	06/12/2001	PTO Delay (PTO):	1262
Issue Date of Patent:		Three Years:	0
Pre-Issue Petitions:	0	Applicant Delay (APPL):	199
Post-Issue Petitions:	0	Total PTA (days):	872
PTO Delay Adjustment:	-191		

File Contents History

Number	Date	Contents Description	PTO	APPL	START
137	09/07/2009	ADJUSTMENT OF PTA CALCULATION BY PTO		70	
136	09/07/2009	ADJUSTMENT OF PTA CALCULATION BY PTO		7	
135	09/07/2009	ADJUSTMENT OF PTA CALCULATION BY PTO		120	
134	09/07/2009	ADJUSTMENT OF PTA CALCULATION BY PTO	6		
121	06/25/2009	MAIL NOTICE OF ALLOWANCE			
120	06/23/2009	ISSUE REVISION COMPLETED			
119	06/23/2009	DOCUMENT VERIFICATION			
118	06/23/2009	NOTICE OF ALLOWANCE DATA VERIFICATION COMPLETED			
117	06/22/2009	EXAMINER'S AMENDMENT COMMUNICATION			
116	06/22/2009	NOTICE OF ALLOWABILITY			
115	06/17/2009	INFORMATION DISCLOSURE STATEMENT CONSIDERED			
114	06/17/2009	INFORMATION DISCLOSURE STATEMENT (IDS) FILED			
111	06/13/2009	CORRESPONDENCE ADDRESS CHANGE			
110	06/10/2009	LETTER REQUESTING INTERVIEW WITH EXAMINER			
109	06/12/2009	DATE FORWARDED TO EXAMINER			
108	06/10/2009	AMENDMENT SUBMITTED/ENTERED WITH FILING OF CPA/RCE			
107	06/12/2009	DATE FORWARDED TO EXAMINER			
106	06/10/2009	REQUEST FOR CONTINUED EXAMINATION (RCE)			
105	06/12/2009	DISPOSAL FOR A RCE/CPA/129 (EXPRESS ABANDONMENT IF CPA)			
104	06/10/2009	WORKFLOW - REQUEST FOR RCE - BEGIN			
103	03/13/2009	MAIL FINAL REJECTION (PTOL - 326)			

102	03/13/2009	FINAL REJECTION			
101	01/07/2009	DATE FORWARDED TO EXAMINER			
100	12/22/2008	RESPONSE AFTER NON-FINAL ACTION		32	98
99	12/22/2008	REQUEST FOR EXTENSION OF TIME - GRANTED			
98	08/20/2008	MAIL NON-FINAL REJECTION			
97	08/18/2008	NON-FINAL REJECTION			
96	06/13/2008	DATE FORWARDED TO EXAMINER			
95	06/06/2008	RCE- AF PROCESSED			
94	06/13/2008	DATE FORWARDED TO EXAMINER			
93	06/06/2008	REQUEST FOR CONTINUED EXAMINATION (RCE)		45	83
92	06/13/2008	DISPOSAL FOR A RCE/CPA/129 (EXPRESS ABANDONMENT IF CPA)			
91	06/06/2008	REQUEST FOR EXTENSION OF TIME - GRANTED			
90	06/06/2008	WORKFLOW - REQUEST FOR RCE - BEGIN			
89	04/30/2008	MAIL ADVISORY ACTION (PTOL - 303)			
88	04/28/2008	ADVISORY ACTION (PTOL-303)			
87	04/17/2008	DATE FORWARDED TO EXAMINER			
86	04/02/2008	AMENDMENT AFTER FINAL REJECTION			
85	02/28/2008	MAIL EXAMINER INTERVIEW SUMMARY (PTOL - 413)			
84	02/19/2008	EXAMINER INTERVIEW SUMMARY RECORD (PTOL - 413)			
83	01/22/2008	MAIL FINAL REJECTION (PTOL - 326)			
82	01/18/2008	FINAL REJECTION			
81	11/23/2007	DATE FORWARDED TO EXAMINER			
80	11/19/2007	RESPONSE AFTER NON-FINAL ACTION		62	75
79	11/19/2007	AFFIDAVIT(S) (RULE 131 OR 132) OR EXHIBIT(S) RECEIVED			
78	11/19/2007	REQUEST FOR EXTENSION OF TIME - GRANTED			
77	04/10/2003	INFORMATION DISCLOSURE STATEMENT CONSIDERED			
76	04/10/2003	INFORMATION DISCLOSURE STATEMENT (IDS) FILED			
75	06/18/2007	MAIL NON-FINAL REJECTION	120		65
74	06/07/2007	NON-FINAL REJECTION			
73	05/18/2005	INFORMATION DISCLOSURE STATEMENT			

		CONSIDERED			
72	04/09/2007	APPEAL BRIEF REVIEW COMPLETE			
71	04/09/2007	DATE FORWARDED TO EXAMINER			
70	02/12/2007	APPEAL BRIEF FILED			
69	03/03/2007	CASE DOCKETED TO EXAMINER IN GAU			
68	01/12/2007	NOTICE -- DEFECTIVE APPEAL BRIEF			
67	10/25/2006	APPEAL BRIEF REVIEW COMPLETE			
66	10/25/2006	DATE FORWARDED TO EXAMINER			
65.1	10/18/2006	DEFECTIVE / INCOMPLETE APPEAL BRIEF FILED			
65	10/18/2006	APPEAL BRIEF FILED			
64	08/18/2006	NOTICE OF APPEAL FILED		29	51
63	08/18/2006	REQUEST FOR EXTENSION OF TIME - GRANTED			
62	07/19/2006	MAIL ADVISORY ACTION (PTOL - 303)			
61	07/17/2006	ADVISORY ACTION (PTOL-303)			
60	05/18/2006	INFORMATION DISCLOSURE STATEMENT CONSIDERED			
59	07/12/2006	DATE FORWARDED TO EXAMINER			
58	07/06/2006	AMENDMENT AFTER FINAL REJECTION			
57	05/05/2005	PRELIMINARY AMENDMENT			
56	05/18/2005	MISCELLANEOUS INCOMING LETTER			
55.7	05/18/2005	INFORMATION DISCLOSURE STATEMENT (IDS) FILED			
55	05/18/2005	INFORMATION DISCLOSURE STATEMENT (IDS) FILED			
54	06/08/2006	IFW TSS PROCESSING BY TECH CENTER COMPLETE			
53	05/18/2006	REFERENCE CAPTURE ON IDS			
52.7	05/18/2006	INFORMATION DISCLOSURE STATEMENT (IDS) FILED			
52	05/18/2006	INFORMATION DISCLOSURE STATEMENT (IDS) FILED			
51	04/20/2006	MAIL FINAL REJECTION (PTOL - 326)			
50	04/17/2006	FINAL REJECTION			
49	04/07/2006	INFORMATION DISCLOSURE STATEMENT CONSIDERED			
48.7	04/07/2006	INFORMATION DISCLOSURE STATEMENT (IDS) FILED			
48	04/07/2006	INFORMATION DISCLOSURE STATEMENT (IDS)			

		FILED			
47	01/27/2006	NEW OR ADDITIONAL DRAWING FILED			
46	02/03/2006	DATE FORWARDED TO EXAMINER			
45	01/27/2006	RESPONSE AFTER NON-FINAL ACTION		31	43
44	01/27/2006	REQUEST FOR EXTENSION OF TIME - GRANTED			
43	09/27/2005	MAIL NON-FINAL REJECTION	1142		-1
42	09/26/2005	NON-FINAL REJECTION			
41	09/19/2005	MISCELLANEOUS INCOMING LETTER			
40	06/06/2005	CASE DOCKETED TO EXAMINER IN GAU			
39	06/01/2005	CASE DOCKETED TO EXAMINER IN GAU			
38	05/26/2005	CORRESPONDENCE ADDRESS CHANGE			
37	05/05/2005	MISCELLANEOUS INCOMING LETTER			
36	05/05/2005	PRELIMINARY AMENDMENT			
35	04/28/2005	CORRESPONDENCE ADDRESS CHANGE			
34	04/28/2005	CORRESPONDENCE ADDRESS CHANGE			
33	09/03/2004	REFERENCE CAPTURE ON IDS			
32.7	09/03/2004	INFORMATION DISCLOSURE STATEMENT (IDS) FILED			
32	09/03/2004	INFORMATION DISCLOSURE STATEMENT (IDS) FILED			
31	09/03/2004	PRELIMINARY AMENDMENT			
30	04/04/2005	CASE DOCKETED TO EXAMINER IN GAU			
29	04/01/2005	FILE MARKED FOUND			
28	03/03/2005	CORRESPONDENCE ADDRESS CHANGE			
27	03/04/2005	CHANGE IN POWER OF ATTORNEY (MAY INCLUDE ASSOCIATE POA)			
26	01/04/2005	FILE MARKED LOST			
25	12/13/2004	CASE DOCKETED TO EXAMINER IN GAU			
24	12/13/2004	CASE DOCKETED TO EXAMINER IN GAU			
23	09/09/2004	CASE DOCKETED TO EXAMINER IN GAU			
22	09/03/2004	WORKFLOW INCOMING AMENDMENT IFW			
21	05/17/2004	CASE DOCKETED TO EXAMINER IN GAU			
20	05/04/2004	CORRESPONDENCE ADDRESS CHANGE			
18.7	01/26/2004	INFORMATION DISCLOSURE STATEMENT (IDS) FILED			
18	01/26/2004	INFORMATION DISCLOSURE STATEMENT (IDS) FILED			

17.7	02/04/2004	INFORMATION DISCLOSURE STATEMENT (IDS) FILED			
17	02/04/2004	INFORMATION DISCLOSURE STATEMENT (IDS) FILED			
16.7	06/12/2003	INFORMATION DISCLOSURE STATEMENT (IDS) FILED			
16	06/12/2003	INFORMATION DISCLOSURE STATEMENT (IDS) FILED			
15	06/24/2003	CASE DOCKETED TO EXAMINER IN GAU			
11	02/14/2003	CORRESPONDENCE ADDRESS CHANGE			
10	12/09/2002	CORRESPONDENCE ADDRESS CHANGE			
8	04/23/2002	CASE DOCKETED TO EXAMINER IN GAU			
7	11/15/2001	CASE DOCKETED TO EXAMINER IN GAU			
6	11/06/2001	APPLICATION DISPATCHED FROM OIPE			
5	11/01/2001	APPLICATION IS NOW COMPLETE			
4	08/08/2001	NOTICE MAILED--APPLICATION INCOMPLETE--FILING DATE ASSIGNED			
3	08/07/2001	CORRESPONDENCE ADDRESS CHANGE			
2	06/21/2001	IFW SCAN & PACR AUTO SECURITY REVIEW			
1	06/12/2001	INITIAL EXAM TEAM NN			

Search Another: Application# [ ] Search

EXPLANATION OF PTA CALCULATION

EXPLANATION OF PTE CALCULATION

To go back, right click here and select Back. To go forward, right click here and select Forward. To refresh, right click here and select Refresh.

Back to OASIS | Home page

UNITED STATES PATENT AND TRADEMARK OFFICE

COMMISSIONER FOR PATENTS
UNITED STATES PATENT AND TRADEMARK OFFICE
P.O. BOX 1450
ALEXANDRIA, VA 22313-1450
www.uspto.gov

PATTERSON THUENTE CHRISTENSEN PEDERSEN, P.A.
4800 IDS CENTER
80 SOUTH 8TH STREET
MINNEAPOLIS MN 55402-2100

MAILED
JUN 15 2010
OFFICE OF PETITIONS

In re Patent No. 7,606,778	: DECISION ON APPLICATION FOR
Issued: October 20, 2009	: PATENT TERM ADJUSTMENT and
Application No. 09/878,245	: NOTICE OF INTENT TO ISSUE
Filed: June 12, 2001	: CERTIFICATE OF CORRECTION
Dkt. No.: 2951.03US02	:

This is a decision on the petition filed on December 15, 2009, which is being treated as a petition under 37 CFR 1.705(d) requesting that the patent term adjustment indicated on the above-identified patent be corrected to indicate that the term of the above-identified patent is extended or adjusted by 1,848 days.

The petition to correct the patent term adjustment indicated on the above-identified patent to indicate that the term of the above-identified patent is extended or adjusted by 1848 days is **GRANTED**.

The Office acknowledges submission of the $200.00 fee set forth in 37 CFR 1.18(e). No additional fees are required.

The application is being forwarded to the Certificates of Corrections Branch for issuance of a certificate of correction. The Office will issue a certificate of correction indicating that the term of the above-identified patent is extended or adjusted by **1848** days.

Telephone inquiries specific to this matter should be directed to the undersigned at (571) 272-3205.

/ALESIA M. BROWN/

Alesia M. Brown
Senior Petitions Attorney
Office of Petitions

Enclosure: Copy of DRAFT Certificate of Correction

UNITED STATES PATENT AND TRADEMARK OFFICE

CERTIFICATE OF CORRECTION

PATENT : 7,606,778

DATED : October 20, **2009** **DRAFT**

INVENTOR(S) : Dewar

It is certified that error appears in the above-identified patent and that said Letters Patent is hereby corrected as shown below:

On the cover page,

[*] Notice: Subject to any disclaimer, the term of this patent is extended or adjusted under 35 USC 154(b) by 1,065 days

Delete the phrase "by 1,065 days" and insert – by 1,848 days--

UNITED STATES PATENT AND TRADEMARK OFFICE

Commissioner for Patents
United States Patent and Trademark Office
P.O. Box 1450
Alexandria, VA 22313-1450
www.uspto.gov

SEP 0 6 2005

082005

SUGHRUE, MION, ZINN, MACPEAK & SEAS PLLC
2100 PENNSYLVANIA AVE., N.W.
WASHINGTON, D.C. 20037

In re Application of Seiji Umemoto Appl. No.: 09/878,268 Filed: June 12, 2001 For: LIQUID-CRYSTAL DISPLAY DEVICE	: : : : :	DECISION ON PETITION UNDER 37 C.F.R. § 1.59

This is a decision on the petition under 37 C.F.R. §1.59(b), filed February 11, 2004, to expunge proprietary information from the above-identified application.

The petition is denied.

Petitioner requests that the proprietary information submitted on June 28, 2001, pursuant to M.P.E.P. § 724, be expunged from the record.

Pursuant to M.P.E.P. § 724.04(a)(F), "If a petition to expunge is not filed prior to the mailing of the notice of allowability, the materials submitted under MPEP § 724.02 will be released to the public upon the issuance of the application as a patent and upon the filing of a request and the appropriate fee (37 CFR 1.14)."

The petition was filed after December 1, 2003, the mail date of the Notice of Allowability. Consequently, the proprietary information will not be expunged and the petition is not granted. The proprietary information submitted June 28, 2001 will remain in the file record.

It is noted that the information asserted as containing proprietary information filed June 28, 2001, has been published as a US patent.

Janice A. Falcone

Janice A. Falcone, TC Director
Technology Center 2800
Semiconductors, Electrical and Optical
Systems and Components

UNITED STATES PATENT AND TRADEMARK OFFICE

UNITED STATES DEPARTMENT OF COMMERCE
United States Patent and Trademark Office
Address: COMMISSIONER FOR PATENTS
P.O. Box 1450
Alexandria, Virginia 22313-1450
www.uspto.gov

SUGHRUE MION, PLLC
2100 PENNSYLVANIA AVENUE, N.W.
SUITE 800
WASHINGTON, DC 20037

Mail Date: 05/28/2010

Applicant	: Pascal Agin	: DECISION ON REQUEST FOR
Patent Number	: 7626970	: RECALCULATION of PATENT
Issue Date	: 12/01/2009	: TERM ADJUSTMENT IN VIEW
Application No	: 09/878,269	: OF WYETH AND NOTICE OF INTENT TO
Filed	: 06/12/2001	: ISSUE CERTIFICATE OF CORRECTION
		:

The Request for Recalculation is **GRANTED** to the extent indicated.

The patent term adjustment has been determined to be **907** days. The USPTO will *sua sponte* issue a certificate of correction reflecting the amount of PTA days determined by the recalculation.

Prior to the issuance of the certificate of correction, the USPTO will afford patentee an opportunity to be heard and request reconsideration. Accordingly, patentee has **one month or thirty (30) days**, whichever is longer, to file a request for reconsideration of this patent term adjustment calculation. See 35 U.S.C. 154(b)(3)(B)(ii) and 37 CFR 1.322(a)(4). No extensions of time will be granted under 37 CFR 1.136.

Patentee should use document code PET.OP if electronically filing a request for reconsideration of this patent term adjustment calculation. The patentee must also include the information required by 37 CFR 1.705(b)(2) and the fee required by 37 CFR 1.18(e). If patentee does not file a timely request for reconsideration of this patent term adjustment calculation including the information required by 37 CFR 1.705(b)(2) and the fee required by 37 CFR 1.18(e), the USPTO will issue a certificate of correction reflecting the PTA determination noted above.

Patentee should be aware that in order to preserve the right to review in the United States District Court for the District of Columbia of the USPTO patent term adjustment determination, patentee must ensure that he or she also take the steps required under 35 U.S.C. 154(b)(4)(A) in a timely manner. Nothing in the request for recalculation should be construed as providing an alternative time frame for commencing a civil action under 35 U.S.C. 154(b)(4)(A).

Any questions concerning this decision should be directed to the Office of Patent Legal Administration at 571-272-7702.

UNITED STATES PATENT AND TRADEMARK OFFICE

Commissioner for Patents
United States Patent and Trademark Office
P.O. Box 1450
Alexandria, VA 22313-1450
www.uspto.gov

RADER FISHMAN & GRAUER PLLC
LION BUILDING
1233 20TH STREET N.W., SUITE 501
WASHINGTON DC 20036

COPY MAILED

AUG 25 2008

In re Application of	:	
Shinji NEGISHI et al.	:	
Application No. 09/878,282	:	ON PETITION
Filed: June 12, 2001	:	
Attorney Docket No. **SON-2143**	:	

This is a decision on the petition under the unintentional provisions of 37 CFR 1.137(b), filed April 24, 2008, to revive the above-identified application.

The petition is **DISMISSED**.

Any request for reconsideration of this decision must be submitted within TWO (2) MONTHS from the mail date of this decision. Extensions of time under 37 CFR 1.136(a) are permitted. The reconsideration request should include a cover letter entitled "Renewed Petition under 37 CFR 1.137(b)." This is **not** a final agency action within the meaning of 5 U.S.C. § 704.

The application became abandoned for failure to timely file a reply within the meaning of 37 CFR 1.113 to the final Office action of September 21, 2007. The proposed reply required for consideration of a petition to revive must be a Notice of Appeal (and appeal fee required by 37 CFR 41.20(b)(2), an amendment that *prima facie* places the application in condition for allowance, a Request for Continued Examination and submission (37 CFR 1.114), or the filing of a continuing application under 37 CFR 1.53(b). See MPEP 711.03(c)(III)(A)(2). A three (3) months extension of time pursuant to the provisions of 37 CFR 1.136(a) was obtained. Accordingly, the date of abandonment of this application is March 22, 2008.

A grantable petition under 37 CFR 1.137(b) must be accompanied by: (1) the required reply, unless previously filed; (2) the petition fee as set forth in 37 CFR 1.17(m); (3) a statement that the entire delay in filing the required reply from the due date for the reply until the filing of a grantable petition pursuant to 37 CFR 1.137(b) was unintentional; and (4) any terminal disclaimer (and fee as set forth in 37 CFR 1.20(d)) required by 37 CFR 1.137(d). Where there is a question as to whether either the abandonment or the delay in filing a petition under 37 CFR 1.137 was unintentional, the Director may require additional information. See MPEP 711.03(c)(II)(C) and (D). The instant petition lacks item(s) (1).

The instant petition is not accompanied by a submission that is acceptable under 37 CFR 1.114. See MPEP § 706.07(h) II.

There is no indication that Christopher Tobin was ever given a power of attorney to prosecute the application. If the person signing the petition desires to receive future correspondence regarding this application, the appropriate power of attorney document must be submitted.

Further correspondence with respect to this matter should be addressed as follows:

By Mail: Mail Stop PETITION
Commissioner for Patents
P. O. Box 1450
Alexandria, VA 22313-1450

By hand: U. S. Patent and Trademark Office
Customer Service Window, Mail Stop Petitions
Randolph Building
401 Dulany Street
Alexandria, VA 22314

The centralized facsimile number is **(571) 273-8300.**

Telephone inquiries concerning this decision should be directed to Tredelle Jackson at (571) 272-2783.

Ramesh Krishnamurthy

Ramesh Krishnamurthy
Petitions Examiner
Office of Petitions

APR 24 2008
PATENT & TRADEMARK OFFICE

PTO/SB/64 (01-08)
Approved for use through 04/30/2008. OMB 0651-0031
U.S. Patent and Trademark Office; U.S. DEPARTMENT OF COMMERCE
Under the Paperwork Reduction Act of 1995, no persons are required to respond to a collection of information unless it displays a valid OMB control number.

PETITION FOR REVIVAL OF AN APPLICATION FOR PATENT ABANDONED UNINTENTIONALLY UNDER 37 CFR 1.137(b)	Docket Number (Optional) SON-2143

First named inventor: Shinji Negishi

Application No: 09/878,282-Conf. #3140 Art Unit: 2623

Filed: June 12, 2001 Examiner: R. M. Brown

Title: DATA CONVERSION APPARATUS AND METHOD, DATA DISTRIBUTION APPARATUS AND METHOD, AND DATA DISTRIBUTION SYSTEM

Attention: Office of Petitions
Mail Stop Petition
Commissioner for Patents
P.O. Box 1450
Alexandria, VA 22313-1450
FAX (571) 273-8300

NOTE: If information or assistance is needed in completing this form, please contact Petitions Information at (571) 272-3282.

The above-identified application became abandoned for failure to file a timely and proper reply to a notice or action by the United States Patent and Trademark Office. The date of abandonment is the day after the expiration date of the period set for reply in the office notice or action plus any extensions of time actually obtained.

APPLICANT HEREBY PETITIONS FOR REVIVAL OF THIS APPLICATION

NOTE: A grantable petition requires the following items:
(1) Petition fee;
(2) Reply and/or issue fee;
(3) Terminal disclaimer with disclaimer fee – required for all utility and plant applications filed before June 8, 1995; and for all design applications; and
(4) Statement that the entire delay was unintentional.

1. Petition fee

☐ Small entity – fee $ _____ (37 CFR 1.17(m)). Applicant claims small entity status. See 37 CFR 1.27.

☒ Other than small entity – fee $ 1,540.00 (37 CFR 1.17(m))

2. Reply and/or fee

A. The reply and/or fee to the above-noted Office action in the form of Request for Continued Examination (identify type of reply):

☐ has been filed previously on _____ .

☒ is enclosed herewith.

B. The issue fee and publication fee (if applicable) of $ _____ .

☐ has been paid previously on _____ .

☐ is enclosed herewith.

04/25/2008 SZEWDIE1 00000031 180013 09878282
02 FC:1453 1540.00 DA

Under the Paperwork Reduction Act of 1995, no persons are required to respond to a collection of information unless it displays a valid OMB control number.

3. Terminal disclaimer with disclaimer fee

[x] Since this utility/plant application was filed on or after June 8, 1995, no terminal disclaimer is required.

[ ] A terminal disclaimer (and disclaimer fee (37 CFR 1.20(d)) of $ _____ for a small entity or $ _____ for other than a small entity) disclaiming the required period of time is enclosed herewith (see PTO/SB/63).

4. STATEMENT: The entire delay in filing the required reply from the due date for the required reply until the filing of a grantable petition under 37 CFR 1.137(b) was unintentional. [NOTE. The United States Patent and Trademark Office may require additional information if there is a question as to whether either the abandonment or the delay in filing a petition under 37 CFR 1.137(b) was unintentional (MPEP 711.03(c), subsections (III)(C) and (D)).]

WARNING:

Petitioner/applicant is cautioned to avoid submitting personal information in documents filed in a patent application that may contribute to identity theft. Personal information such as social security numbers, bank account numbers, or credit card numbers (other than a check or credit card authorization form PTO-2038 submitted for payment purposes) is never required by the USPTO to support a petition or an application. If this type of personal information is included in documents submitted to the USPTO, petitioners/applicants should consider redacting such personal information from the documents before submitting them to the USPTO. Petitioner/applicant is advised that the record of a patent application is available to the public after publication of the application (unless a non-publication request in compliance with 37 CFR 1.213(a) is made in the application) or issuance of a patent. Furthermore, the record from an abandoned application may also be available to the public if the application is referenced in a published application or an issued patent (see 37 CFR 1.14). Checks and credit card authorization forms PTO-2038 submitted for payment purposes are not retained in the application file and therefore are not publicly available.

40,290	April 24, 2008
Signature	Date
Ronald P. Kananen / Christopher M. Tobin	24,104 / 40,290
Typed or printed name	Registration Number, if applicable
RADER, FISHMAN & GRAUER PLLC 1233 20th Street, N.W. Suite 501 Washington, DC 20036	(202) 955-3750
Address	Telephone Number

Enclosures:
- [x] Fee Payment
- [ ] Reply
- [ ] Terminal Disclaimer Form
- [ ] Additional sheets containing statements establishing unintentional delay
- [ ] Other: _____

OIPE IAP87
APR 24 2008
PATENT & TRADEMARK OFFICE

PTO/SB/30 (01-08)
Approved for use through 04/30/2008. OMB 0651-0031
U.S. Patent and Trademark Office; U.S. DEPARTMENT OF COMMERCE
Under the Paperwork Reduction Act of 1995, no persons are required to respond to a collection of information unless it displays a valid OMB control number.

Request for Continued Examination (RCE) Transmittal

Address to:
Mail Stop RCE
Commissioner for Patents
P.O. Box 1450
Alexandria, VA 22313-1450

Application Number	09/878,282-Conf. #3140
Filing Date	June 12, 2001
First Named Inventor	Shinji Negishi
Art Unit	2623
Examiner Name	R. M. Brown
Attorney Docket Number	SON-2143

This is a Request for Continued Examination (RCE) under 37 CFR 1.114 of the above-identified application.
Request for Continued Examination (RCE) practice under 37 CFR 1.114 does not apply to any utility or plant application filed prior to June 8, 1995, or to any design application.

1. Submission required under 37 CFR 1.114 Note: If the RCE is proper, any previously filed unentered amendments and amendments enclosed with the RCE will be entered in the order in which they were filed unless applicant instructs otherwise. If applicant does not wish to have any previously filed unentered amendment(s) entered, applicant must request non-entry of such amendment(s).
   - a. [ ] Previously submitted. If a final Office action is outstanding, any amendments filed after the final Office action may be considered as a submission even if this box is not checked.
     - i. [ ] Consider the arguments in the Appeal Brief or Reply Brief previously filed on _____
     - ii. [ ] Other _____
   - b. [x] Enclosed
     - i. [ ] Amendment/Reply
     - ii. [ ] Affidavit(s)/Declaration(s)
     - iii. [ ] Information Disclosure Statement (IDS)
     - iv. [x] Other Petition to Revive Unintentional
2. Miscellaneous
   - a. [ ] Suspension of action on the above-identified application is requested under 37 CFR 1.103(c) for a period of _____ months. (Period of suspension shall not exceed 3 months; Fee under 37 CFR 1.17(i) required)
   - b. [ ] Other _____
3. Fees The RCE fee under 37 CFR 1.17(e) is required by 37 CFR 1.114 when the RCE is filed.
   - a. [x] The Director is hereby authorized to charge the following fees, any underpayment of fees, or credit any overpayments to Deposit Account No. 18-0013 . I have enclosed a duplicate copy of this sheet.
     - i. [x] RCE fee required under 37 CFR 1.17(e)
     - ii. [ ] Extension of time fee (37 CFR 1.136 and 1.17)
     - iii. [ ] Other _____
   - b. [ ] Check in the amount of $ _____ enclosed
   - c. [ ] Payment by credit card (Form PTO-2038 enclosed)

WARNING: Information on this form may become public. Credit card information should not be included on this form. Provide credit card information and authorization on PTO-2038.

SIGNATURE OF APPLICANT, ATTORNEY, OR AGENT REQUIRED

Signature		Date	April 24, 2008
Name (Print/Type)	Ronald P. Kananen / Christopher M. Tobin	Registration No.	24,104 / 40,290

04/25/2008 SZEWDIE1 00000031 180013 09878282
01 FC:1801 810.00 DA

OIPE IAP97
MAR 19 2008
PATENT & TRADEMARK OFFICE

2623

PTO/SB/22 (01-08)
Approved for use through 02/29/2008. OMB 0651-0031
U.S. Patent and Trademark Office; U.S. DEPARTMENT OF COMMERCE
Under the Paperwork Reduction Act of 1995, no persons are required to respond to a collection of information unless it displays a valid OMB control number.

PETITION FOR EXTENSION OF TIME UNDER 37 CFR 1.136(a) FY 2008 *(Fees pursuant to the Consolidated Appropriations Act, 2005 (H.R. 4818).)*	Docket Number (Optional) SON-2143
Application Number 09/878,282-Conf. #3140	Filed June 12, 2001
For DATA CONVERSION APPARATUS AND METHOD, DATA DISTRIBUTION APPARATUS AND METHOD, AND DATA DISTRIBUTION SYSTEM	
Art Unit 2623	Examiner R. M. Brown

This is a request under the provisions of 37 CFR 1.136(a) to extend the period for filing a reply in the above identified application.

The requested extension and fee are as follows (check time period desired and enter the appropriate fee below):

		Fee	Small Entity Fee	
☐	One month (37 CFR 1.17(a)(1))	$120	$60	$
☐	Two months (37 CFR 1.17(a)(2))	$460	$230	$
X	Three months (37 CFR 1.17(a)(3))	$1050	$525	$ 1,050.00
☐	Four months (37 CFR 1.17(a)(4))	$1640	$820	$
☐	Five months (37 CFR 1.17(a)(5))	$2230	$1115	$

☐ Applicant claims small entity status. See 37 CFR 1.27.

☐ A check in the amount of the fee is enclosed.

☐ Payment by credit card. Form PTO-2038 is attached.

☐ The Director has already been authorized to charge fees in this application to a Deposit Account.

X The Director is hereby authorized to charge any fees which may be required, or credit any overpayment, to Deposit Account Number 18-0013 . I have enclosed a duplicate copy of this sheet.

WARNING: Information on this form may become public. Credit card information should not be included on this form. Provide credit card information and authorization on PTO-2038.

I am the

☐ applicant/inventor.

☐ assignee of record of the entire interest. See 37 CFR 3.71. Statement under 37 CFR 3.73(b) is enclosed. (Form PTO/SB/96).

X attorney or agent of record. Registration Number 24,104 / 40,290

☐ attorney or agent under 37 CFR 1.34. Registration number if acting under 37 CFR 1.34 _____

40,290

Signature — March 19, 2008 Date

Ronald P. Kananen / Christopher M. Tobin — Typed or printed name

(202) 955-3750 — Telephone Number

NOTE: Signatures of all the inventors or assignees of record of the entire interest or their representative(s) are required. Submit multiple forms if more than one signature is required, see below.

☐ Total of 1 forms are submitted.

03/20/2008 CNGUYEN2 00000072 180013 09878282
01 FC:1253 1050.00 DA

Continuation of 3. NOTE: Applicant's proposed amendment to claims 1, 5, 9, 13, 17, 21, 49, 50 & 51, requiring 'selecting the stream data to be packetized from the data storage means based on schedule information and reading data of a length specified in the schedule information and adding a packet header in accordance with the schedule information and generating the stream data converted for the trick play', raises new issues which would require further search and /or consideration. Furthermore, the instant claims propose additional features that are likewise analyzed.

RAM Fee History Query

Revenue Accounting and Management

Name/Number: 09878282 Total Records Found: 13

Start Date: Any Date End Date: Any Date

Accounting Date	Sequence Num.	Fee Type	Fee Code	Fee Amount	Mailroom Date	Payment Method
04/25/2008	00000039	1	1801	$810.00	04/24/2008	DA 180013
04/25/2008	00000040	1	1453	$1,540.00	04/24/2008	DA 180013
03/20/2008	00000103	1	1253	$1,050.00	03/19/2008	DA 180013
06/22/2007	00000220	1	1252	$450.00	06/21/2007	DA 180013
10/27/2006	00000177	1	1801	$790.00	10/26/2006	DA 180013
10/27/2006	00000178	1	1251	$120.00	10/26/2006	DA 180013
10/04/2005	00000145	1	1251	$120.00	10/03/2005	DA 180013
10/04/2005	00000146	1	1806	$180.00	10/03/2005	DA 180013
10/11/2001	00000119	1	581	$40.00	10/01/2001	DA 180013
10/05/2001	00000017	1	105	$130.00	10/01/2001	DA 180013
06/14/2001	00000058	1	101	$710.00	06/12/2001	DA 180013
06/14/2001	00000059	1	102	$960.00	06/12/2001	DA 180013
06/14/2001	00000060	1	103	$558.00	06/12/2001	DA 180013

UNITED STATES PATENT AND TRADEMARK OFFICE

Commissioner for Patents
United States Patent and Trademark Office
P.O. Box 1450
Alexandria, VA 22313-1450
www.uspto.gov

RADER FISHMAN & GRAUER PLLC
LION BUILDING
1233 20TH STREET N.W., SUITE 501
WASHINGTON DC 20036

COPY MAILED
OCT 27 2008

In re Application of	:	
Shinji NEGISHI et al.	:	
Application No. 09/878,282	:	DECISION ON PETITION
Filed: June 12, 2001	:	
Attorney Docket No. **SON-2143**	:	

This is a decision on the renewed petition under the unintentional provisions of 37 CFR 1.137(b), filed September 25, 2008, to revive the above-identified application.

The petition is **GRANTED**.

The application became abandoned for failure to timely file a reply within the meaning of 37 CFR 1.113 to the final Office action of September 21, 2007. The proposed reply required for consideration of a petition to revive must be a Notice of Appeal (and appeal fee required by 37 CFR 41.20(b)(2), an amendment that *prima facie* places the application in condition for allowance, a Request for Continued Examination and submission (37 CFR 1.114), or the filing of a continuing application under 37 CFR 1.53(b). See MPEP 711.03(c)(III)(A)(2). A three (3) months extension of time pursuant to the provisions of 37 CFR 1.136(a) was obtained. Accordingly, the date of abandonment of this application is March 22, 2008.

The petition satisfies the requirements of 37 CFR 1.137(b) in that petitioner has supplied (1) the reply in the form of a Request for Continued Examination (RCE) and fee of $810, and the submission required by 37 CFR 1.114; (2) the petition fee of $1540; and (3) a proper statement of unintentional delay. Accordingly, the reply to the final Office Action of September 21, 2007 is accepted as having been unintentionally delayed.

The petition fee submitted on September 25, 2008 was not needed and will be refunded to the deposit account 18-0013.

In regard to the Associate Power of Attorney request filed concurrently with the instant petition, it is noted effective June 25, 2004, the associate power of attorney practice has been eliminated. The office no longer accepts a power of attorney signed by a principal to name an associate

power of attorney. The request for appointment of associate power of attorney is not accepted. See also MPEP § 402.02.

Telephone inquiries concerning this decision should be directed to Tredelle Jackson at (571) 272-2783.

This application is being referred to Technology Center AU 2424 for processing of the RCE and for appropriate action by the Examiner in the normal course of business on the amendment submitted in accordance with 37 CFR 1.114.

Ramesh Krishnamurthy

Ramesh Krishnamurthy
Petitions Examiner
Office of Petitions

UNITED STATES PATENT AND TRADEMARK OFFICE

COMMISSIONER FOR PATENTS
UNITED STATES PATENT AND TRADEMARK OFFICE
P.O. BOX 1450
ALEXANDRIA, VA 22313-1450
www.uspto.gov

Paper No.

Ronald P. Kaanen
Sader, Fishman & Grauber, P.L.L.C.
Suite 501
1233 20th Street, N. W.
Washington, DC 20036

COPY MAILED
MAR 3 0 2004
OFFICE OF PETITIONS

In re Application of	:	
Yoshiro Horiuchi	:	
Application No. 09/878,287	:	ON PETITION
Filed: June 12, 2001	:	
Attorney Docket No. SON-2130	:	

This is a decision on the petition filed December 30, 2003, under 37 CFR 1.137(a), which is being treated as a petition to withdraw the holding of abandonment under the provisions of 37 CFR 1.181.

The petition is **GRANTED.**

Petitioner asserts that the Office action was never received and has provided evidence to support such an assertion. In view thereof, it can be reasonably assumed that petitioner did not, in fact, receive the Office action. As such, the abandonment of this application was improper. The petition fee of $110 will be credited to petitioner's deposit account in due course.

The application file is being forwarded to Technology Center 2800.

Telephone inquiries concerning this decision should be directed to the undersigned at (703) 306-3475.

Marianne E. Morgan
Petitions Examiner
Office of Petitions
Office of the Deputy Commissioner
for Examination Policy

UNITED STATES PATENT & TRADEMARK OFFICE
Washington, D.C. 20231

REQUEST FOR PATENT FEE REFUND

1 Date of Request: 3/29/04

2 Serial/Patent # 09/878,287

	3 Please refund the following fee(s):	4 PAPER NUMBER	5 DATE FILED	6 AMOUNT
	Filing			$
	Amendment			$
	Extension of Time			$
	Notice of Appeal/Appeal			$
✓	Petition		12/30/03	$ 110
	Issue			$
	Cert of Correction/Terminal Disc.			$
	Maintenance			$
	Assignment			$
	Other			$

7 TOTAL AMOUNT OF REFUND $ 110

8 TO BE REFUNDED BY:

	Treasury Check
	Credit Deposit A/C #:

9 1 8 -- 0 0 1 3

10 REASON:

	Overpayment
	Duplicate Payment
✓	No Fee Due (Explanation):

APPLICATION IMPROPERLY ABANDONED

11 REFUND REQUESTED BY:

TYPED/PRINTED NAME: MARIANNE MORGAN TITLE: PETITIONS EXMR.

SIGNATURE: Marianne Morgan PHONE: 306-3475

OFFICE: PETITIONS OFC.

****

THIS SPACE RESERVED FOR FINANCE USE ONLY:

APPROVED: [illegible] DATE: 3/30/04

Instructions for completion of this form appear on the back. After completion, attach white and yellow copies to the official file and mail or hand-carry to:

Office of Finance
Refund Branch
Crystal Park One, Room 802B

FORM PTO 1577
(01/90)

UNITED STATES PATENT AND TRADEMARK OFFICE

Commissioner for Patents
United States Patent and Trademark Office
P.O. Box 1450
Alexandria, VA 22313-1450
www.uspto.gov

TRASK BRITT
P O BOX 2550
SALT LAKE CITY, UT 84110

COPY MAILED

OCT 0 6 2005

OFFICE OF PETITIONS

In re Application of	:
Todd O. Bolken	:
Application No. 09/878,302	: DECISION GRANTING PETITION
Filed: June 11, 2001	: UNDER 37 CFR 1.313(c)(2)
Attorney Docket No. 4717US (00-0979)	:

This is a decision on the petition, filed September 29, 2005, under 37 CFR 1.313(c)(2) to withdraw the above-identified application from issue after payment of the issue fee.

The petition is **GRANTED**.

The above-identified application is withdrawn from issue for consideration of a submission under 37 CFR 1.114 (request for continued examination). See 37 CFR 1.313(c)(2).

Petitioner is advised that the issue fee paid on August 17, 2005 in the above-identified application cannot be refunded. If, however, the above-identified application is again allowed, petitioner may request that it be applied towards the issue fee required by the new Notice of Allowance.[1]

Telephone inquiries should be directed to the undersigned at (571) 272-3218.

This matter is being referred to Technology Center AU 2813 for processing of the request for continued examination under 37 CFR 1.114 and for consideration of the Information Disclosure Statement.

Frances Hicks
Petitions Examiner
Office of Petitions

---

[1] *The request to apply the issue fee to the new Notice may be satisfied by completing and returning the new Issue Fee Transmittal Form PTOL-85(b), which includes the following language thereon: "Commissioner for Patents is requested to apply the Issue Fee and Publication Fee (if any) or re-apply any previously paid issue fee to the application identified above." Petitioner is advised that, whether a fee is indicated as being due or not, the Issue Fee Transmittal Form* ***must*** *be completed and timely submitted to avoid abandonment. Additionally, the any balance due or the amount due at the time of payment must also be submitted to avoid the abandonment of the application. Note the language in bold text on the first page of the Notice of Allowance and Fee(s) Due (PTOL-85).*

UNITED STATES PATENT AND TRADEMARK OFFICE

Commissioner for Patents
United States Patent and Trademark Office
P.O. Box 1450
Alexandria, VA 22313-1450
www.uspto.gov

TRASK BRITT
P.O. BOX 2550
SALT LAKE CITY UT 84110

COPY MAILED
NOV 17 2006
OFFICE OF PETITIONS

In re Application of	:	
BOLKEN	:	
Application No. 09/878,302	:	DECISION GRANTING PETITION
Filed: June 11, 2001	:	UNDER 37 CFR 1.313(c)(2)
Attorney Docket No. 4717US (00-0979)	:	

This is a decision on the petition under 37 CFR 1.313(c)(2), filed November 15, 2006, to withdraw the above-identified application from issue after payment of the issue fee.

The petition is **GRANTED**.

The above-identified application is withdrawn from issue for consideration of a submission under 37 CFR 1.114 (request for continued examination). *See* 37 CFR 1.313(c)(2).

Petitioner is advised that the issue fee paid on August 16, 2006 cannot be refunded. If, however, this application is again allowed, petitioner may request that it be applied towards the issue fee required by the new Notice of Allowance.[1]

Telephone inquiries should be directed to Monica A. Graves at (571) 272-7253.

This application is being referred to Technology Center AU 2813 for processing of the request for continued examination under 37 CFR 1.114 and for consideration of the concurrently filed Information Disclosure Statement.

Karen Creasy
Petitions Examiner
Office of Petitions

---

[1] *The request to apply the issue fee to the new Notice may be satisfied by completing and returning the new Part B – Fee(s) Transmittal Form (along with any balance due at the time of submission). Petitioner is advised that the Issue Fee Transmittal Form* ***must*** *be completed and timely submitted to avoid abandonment of the application.*

UNITED STATES PATENT AND TRADEMARK OFFICE

Commissioner for Patents
United States Patent and Trademark Office
P.O. Box 1450
Alexandria, VA 22313-1450
www.uspto.gov

Charles R. Hoffman, Esq.
CAHILL, SUTTON & THOMAS P.L.C.
2141 East Highland Avenue
155 Park One
Phoenix, AZ 85016

COPY MAILED

SEP 2 6 2005

OFFICE OF PETITIONS

In re Application of :
Gobeli and Leszinske :
Application No. 09/878,307 :
Filed: June 8, 2001 :
Attorney Docket No. 5899-A-5 :

ON PETITION

This is a decision in response to the papers filed June 23, 2005, which are being treated as a petition under 37 CFR 1.47(a), a petition under 37 CFR 1.183 requesting waiver of 37 CFR 1.48(a), and a petition under 37 CFR 1.183 requesting waiver of 1.64.[1]

The petition under 37 CFR 1.48 is **granted**.

The petition under 37 CFR 1.183 seeking wavier of 37 CFR 1.48(a) is **granted**.

The petition under 37 CFR 1.183 seeking wavier of 37 CFR 1.64 is **granted**.

Facts:

A petition under 37 CFR 1.47(b) was filed and granted in the parent application.

A copy of the declaration and a copy of the Rule 47(b) decision were submitted upon filing the instant application.

The assignee is Alan J. Leszinske.

The petition under 37 CFR 1.48 seeks to add Alan J. Leszinske as an inventor.

A petition to add an inventor under 37 CFR 1.48(a) requires:

(1) submission of the petition fee,
(2) a statement from each person being added as an inventor and from each person being deleted as an inventor that error in inventorship occurred without deceptive intention on his or her part,
(3) correct executed oath/dec (or oath/dec as permitted by 37 CFR 1.42, 1.43 or 1.47) and
(4) if an assignment has been executed by any of the original named inventors, the written consent of the assignee.

Petitioner has satisfied requirements (1), (2), and (4) above.

---

[1] 37 CFR 1.64(a) states, "The oath or declaration (§ 1.63), including any supplemental oath or declaration (§ 1.67), must be made by all of the actual inventors except as provided for in §§ 1.42, 1.43, 1.47, or § 1.67."

As to requirement (3), petitioner has filed a petition under 37 CFR 1.183.

It is agreed that justice would be served by waiving the requirement for Gobali's signature on the declaration filed June 23, 2005.

The June 23, 2005 declaration has been accepted, on petition, and placed in the file.

The Office of Publications will be informed of the instant decision so that it may take steps to ensure BOTH inventors appear on the face of the printed patent.

Telephone inquiries should be directed to Petitions Attorney Steven Brantley at (571) 272-3203.

Charles Steven Brantley
Senior Petitions Attorney
Office of Petitions

UNITED STATES PATENT AND TRADEMARK OFFICE

Commissioner for Patents
United States Patent and Trademark Office
P.O. Box 1450
Alexandria, VA 22313-1450
www.uspto.gov

AUG 0 1 2005

FLESNER & KIM, LLP
P.O. BOX 221200
CHANTILLY, VA 20153

In re Application of:
JIN YEAL CHOI
Serial No.: 09/878,321
Filed: 12 June 2001
Title: ELECTRON GUN FOR A COLOR BRAUN-TUBE

DECISION ON PETITION TO WITHDRAW HOLDING OF ABANDONMENT

This is a decision on the petition filed on August 20, 2004, to withdraw the holding of abandonment of the above-identified application under 37 C.F.R. § 1.181.

The petition to withdraw the holding of abandonment is **GRANTED**.

An Office action (final rejection) was mailed on December 22, 2003, setting a three-month statutory period for reply. In the absence of a response, the application became abandoned as a matter of law on June 22, 2004.

Petitioner asserts that counsel did not receive the Office Action. In support of the assertion, petitioner submitted as evidence of lack of receipt of the Office action a statement from the practitioner stating that the Office communication was not received by the practitioner.

A review of the file record indicates that the Office action mailed on December 22, 2003, was returned to the Office (having a USPTO "received" stamp of January 6, 2004).

The Office procedure for handling returned actions is set forth in MPEP § 707.13:

> Office actions are sometimes returned to the Office because the United States Postal Service has not been able to deliver them. The examiner should use every reasonable means to ascertain the correct address and forward the action again, after stamping it "remailed" with the date thereof and redirecting it if there is any reason to believe that the action would reach applicant at such new address. If the Office action was addressed to an attorney, a letter may be written to the inventor or assignee informing him or her of the returned action. The period running

FLESHNER & KIM
AUG 0 3 2005
RECEIVED

against the application begins with the date of remailing. Ex parte Gourtoff, 1924 C.D. 153, 329 O.G. 536 (Comm'r Pat. 1924).

Since the Office failed to use reasonable means to ascertain the correct address and forward the action again, the Office bears the responsibility for petitioner's lack of notice. For this reason, the Notice of Abandonment is hereby vacated, and the holding of abandonment withdrawn. Inconvenience to the applicant is regretted.

The application will be directed to the examiner for remailing of the Office action as requested by petitioner. The date for reply will be reset to the date of remailing of the Office action.

Any inquiry regarding this decision should be directed to Lissi M. Marquis, Special Program Examiner, at (571) 272-1596.

Janice A. Falcone, Director
Technology Center 2800 - Semiconductors,
Electrical & Optical Systems & Components

UNITED STATES PATENT AND TRADEMARK OFFICE

Commissioner for Patents
United States Patent and Trademark Office
P.O. Box 1450
Alexandria, VA 22313-1450
www.uspto.gov

WHITHAM, CURTIS & CHRISTOFFERSON, P.C.
11491 SUNSET HILLS ROAD
SUITE 340
RESTON, VA 20190

COPY MAILED
MAY 0 2 2006
OFFICE OF PETITIONS

In re Patent of	:	
Sekiguchi	:	
Patent No. 6,928,541	:	
Issue Date: August 9, 2005	:	Decision on Petition
Application No. 09/878,351	:	
Filing Date: June 12, 2001	:	
Attorney Docket No. 05510010AA	:	

This is a decision on the petition under 37 C.F.R. § 1.183, filed December 5, 2005, to waive the rules and accept the correction of the assignee data on the front page of the above-identified patent. The petition is also being treated as a request under 37 CFR 3.81 to accept the correction of the assignee data.

The petition under 37 CFR 1.183 is **DISMISSED AS MOOT.**

The request under 37 CFR 3.81 is **GRANTED**.

Effective June 25, 2004, the practice relating to issuance of a patent to an assignee was modified by requiring that, after payment of an issue fee, a request for a certificate of correction must be filed in order to obtain issuance of the patent to an assignee. Thus, where the assignment data is submitted after payment of the issue fee, the patent document will not include the assignment information. Therefore, as 37 CFR 3.81(b) was modified to provide for issuance of the patent to the assignee, the practice of waiving the rule (37 CFR 3.81(a)) under 37 CFR 1.183 is longer necessary and has been eliminated.

37 CFR 3.81(b), as modified, reads:

> Any request for issuance of an application in the name of the assignee submitted after the date of payment of the issue fee, and any request for a patent to be corrected to state the name of the assignee, must state that the assignment was submitted for recordation as set forth in § 3.11 before issuance of the patent, and must include a request for a certificate of correction under § 1.323 of this chapter (accompanied by the fee set forth in § 1.20(a)) and the processing fee set forth in § 1.17(i) of this chapter.

In other words, the request under 37 CFR 3.81(b) will be granted when:

(1) a request under 37 CFR 3.81 and the fee set forth in 37 CFR 1.17(i) are filed,
(2) the assignment was submitted for recordation prior to issuance of the patent, and
(3) a request for a certificate of correction and the fee set forth in 37 CFR 1.20(a) are submitted.

Petitioner has met the requirements set forth above. Therefore, the request is granted.

Petitioner's deposit account will be charged $130 for the petition under 37 CFR 3.81(b) and $100 for the certificate of correction. Although petitioner contends a PTOL-85(b) containing the assignee information was timely submitted, petitioner has failed to prove the contention. The postcard receipt filed with the petition simply indicates $1,706 was filed on June 28, 2005, along with "Issue fee." The file does contain a sheet labeled "Transmittal of Payment of Issue Fee." For these reasons, the postcard receipt fails to prove the PTOL-85(b) was received by the Office.

Certificates of Correction Branch will be informed of the instant decision and will issue the requested Certificate of Correction.

Telephone inquiries should be directed to Petitions Attorney Steven Brantley at (571) 272-3203.

Charles Steven Brantley
Petitions Attorney
Office of Petitions

UNITED STATES PATENT AND TRADEMARK OFFICE

Commissioner for Patents
United States Patent and Trademark Office
P.O. Box 1450
Alexandria, VA 22313-1450
www.uspto.gov

NIXON & VANDERHYE P.C.
1100 NORTH GLEBE ROAD, 8TH FLOOR
ARLINGTON, VA 22201-4714

COPY MAILED

MAY 0 4 2005

OFFICE OF PETITIONS

In re Application of
Koichi Miyachi et al
Application No. 09/878,358
Filed: June 12, 2001
Attorney Docket No.

ON PETITION

This is a decision on the petition, filed April 29, 2005, under 37 CFR 1.313(c)(2) to withdraw the above-identified application from issue after payment of the issue fee.

The petition is **GRANTED**.

The above-identified application is withdrawn from issue for consideration of a submission under 37 CFR 1.114 (request for continued examination). See 37 CFR 1.313(c)(2).

Petitioner is advised that the issue fee paid on April 6, 2005 in the above-identified application cannot be refunded. If, however, the above-identified application is again allowed, petitioner may request that it be applied towards the issue fee required by the new Notice of Allowance.[1]

Telephone inquiries should be directed to Irvin Dingle at (571) 272-3210.

This matter is being referred to Technology Center AU 2133 for processing of the request for continued examination under 37 CFR 1.114 and for consideration of the concurrently filed Information Disclosure Statement.

Irvin Dingle
Petitions Examiner
Office of Petitions
Office of the Deputy Commissioner
for Patent Examination Policy

[1] The request to apply the issue fee to the new Notice may be satisfied by completing and returning the new Issue Fee Transmittal Form PTOL-85(b), which includes the following language thereon: Commissioner for Patents is requested to apply the Issue Fee and Publication Fee (if any) or re-apply any previously paid issue fee to the application identified above. Petitioner is advised that, whether a fee is indicated as being due or not, the Issue Fee Transmittal Form **must** be completed and timely submitted to avoid abandonment. Note the language in bold text on the first page of the Notice of Allowance and Fee(s) Due (PTOL-85).

UNITED STATES PATENT AND TRADEMARK OFFICE

Commissioner for Patents
United States Patent and Trademark Office
P.O. Box 1450
Alexandria, VA 22313-1450
www.uspto.gov

MAILED

JUN 26 2007

TECHNOLOGY CENTER 2100

John Eisenhart
KED & Associates
P.O. Box 221200
Chantilly, VA 20153-1200

In re Application of:
Keyong-Seok Yun
Application No. 09/878373
Filed: July 12, 2001
For:
MULTIFUNCTIONAL REFRIGERATOR

DECISION ON PETITION
TO Accept Late Mailing of a
Reply Brief

This is a decision on the petition, filed on March 14, 2007 under 37 C.F.R. §1.181, to consider the Reply Brief filed March 14, 2007 timely.

The petition is **DENIED**.

Petitioner states that they attempted to reply to the January 12, 2007 examiners answer on the last day of the period for response (March 12, 2007) but was unable to due to a computer error caused by daylight savings time being 8 weeks early this year which locked the doors of the attorney's office thus keeping the courier from picking up and delivering the response timely.

A review of the record indicates that an examiner's answer was mailed out on January 12, 2007 and that reply brief was filed on March 12, 2007 without a certificate of mailing or a certificate of facsimile transmission along with the petition. Thus the response was filed 2 days past the 2-month deadline.

37 CFR 41.41(c) states:
(c) Extensions of time under § 1.136 (a) of this title for patent applications are not applicable to the time period set forth in this section. See § 1.136 (b) of this title for extensions of time to reply for patent applications and § 1.550 (c) of this title for extensions of time to reply for ex parte reexamination proceedings.

37 CFR 1.136 states:
(a)
(1) If an applicant is required to reply within a nonstatutory or shortened statutory time period, applicant may extend the time period for reply up to the earlier of the expiration of any maximum period set by statute or five months

after the time period set for reply, if a petition for an extension of time and the fee set in § 1.17(a) are filed, unless:
(i) Applicant is notified otherwise in an Office action;
(ii) The reply is a reply brief submitted pursuant to § 41.41 of this title;.....

(b) When a reply cannot be filed within the time period set for such reply and the provisions of paragraph (a) of this section are not available, the period for reply will be extended only for sufficient cause and for a reasonable time specified. Any request for an extension of time under this paragraph **must be filed on or before the day on which such reply is due**, but the mere filing of such a request will not affect any extension under this paragraph. In no situation can any extension carry the date on which reply is due beyond the maximum time period set by statute. See § 1.304 for extensions of time to appeal to the U.S. Court of Appeals for the Federal Circuit or to commence a civil action; § 1.550(c) for extensions of time in ex parte reexamination proceedings; § 1.956 for extensions of time in inter partes reexamination proceedings; and §§ 41.4(a) and 41.121(a)(3) of this title for extensions of time in contested cases before the Board of Patent Appeals and Interferences. Any request under this section must be accompanied by the petition fee set forth in § 1.17(g).

Accordingly no extension of times can be granted after the 2 month period for response has been expired and therefore the petition is **Denied**. The reply brief has not been considered and the application will be forwarded to the Board of Appeals and Interferences in due course.

Any inquiry concerning this decision should be directed to Tod Swann whose telephone number is (571) 272-3612.

James Dwyer
Director
Technology Center 2100
Computer Architecture, Software, and
Information Security

UNITED STATES PATENT AND TRADEMARK OFFICE

PET DEC

COMMISSIONER FOR PATENTS
UNITED STATES PATENT AND TRADEMARK OFFICE
P.O. BOX 1450
ALEXANDRIA, VA 22313-1450
www.uspto.gov

td

APR 21 2004

Mailed :

In re Application of
Jun-ichiro Kase, et al.
Serial No. 09/878,413
Filed: June 12, 2001
For: GLASS SUBSTRATE FOR DISPLAY AND METHOD OF SELECTING IT

DECISION ON PETITION

This is a decision on the PETITION UNDER 37 CFR 1.181 TO REQUIRE THE EXAMINER TO REJOIN CLAIMS 13-22 TO ALLOWED CLAIMS 1-12.

Applicants originally filed claims directed to a glass substrate and a method of selecting a glass substrate. The examiner rejected all of the claims in an office action mailed November 6, 2002. On March 6, 2003, applicants filed a response to the non-final office action and presented additional claims 13-22 directed to a method of reducing contact/peeling electricfication of a glass substrate during the manufacture of a flat panel display. In a non-final office action mailed May 8, 2003, the examiner rejected claims 1-12 and withdrew from consideration newly presented claims 13-22 as being directed to a non-elected invention. Applicants filed a response on September 8, 2003. The examiner indicated claims 1-12 to be allowable in an Ex Parte Quayle action mailed November 21, 2003. In the action, the examiner stated that claims 13-22 are not directed to a process of using the product of claim 1 and therefore rejoinder is not appropriate.

On December 18, 2003, the instant petition under 37 CFR 1.181 was filed to formally request the rejoinder of claims 13-22 to allowed claims 1-12.

DECISION

Section 821.04 of the MPEP states:

821.04 Rejoinder
Where product and process claims drawn to independent and distinct inventions are presented in the same application, applicant may be called upon under 35 U.S.C. 121 to elect claims to either the product or process. See MPEP § 806.05(f) and § 806.05(h). The claims to the nonelected invention will be withdrawn from further consideration under 37 CFR 1.142. See MPEP § 809.02(c) and § 821 through § 821.03. However, if applicant elects claims directed to the product, and a product claim is subsequently found allowable, withdrawn process claims which depend from or otherwise include all the limitations of the allowable product claim will be rejoined.

First, the holding by the examiner that claims 13-22 are withdrawn from consideration because they are directed to an invention that is independent or distinct from the originally examined claims will be addressed. It is noted that the examiner did not properly make this determination. No reasons are given to show why the newly presented claims are independent and/or distinct other than a statement that the new claims are directed to a different method than claimed in claim 3. The restriction requirement is therefore improper and should be withdrawn.

With respect to the request for rejoinder of the claims, it is noted that claims 13-22 are effectively directed to a process of using the product claimed in claim 1. In the instant case, claims 13-22 include all of the limitations of the allowed product claims. Therefore, rejoinder is appropriate.

Accordingly, the petition for rejoinder of claim 13-22 to allowed claims 1-12 is **GRANTED.** The application is being forwarded to the examiner to rejoin claims 13-22 to allowed claims 1-12 and take further appropriate action consistence with this decision.

Jacqueline M. Stone, Director
Technology Center 1700
Chemical and Materials Engineering

OBLON, SPIVAK, MCCLELLAND, MAIER & NEUSTADT, P.C.
1940 DUKE STREET
ALEXANDRIA VA 22314

UNITED STATES PATENT AND TRADEMARK OFFICE

COMMISSIONER FOR PATENTS
UNITED STATES PATENT AND TRADEMARK OFFICE
WASHINGTON, D.C. 20231
www.uspto.gov

Paper No. 6

MYERS BIGEL SIBLEY & SAJOVEC
P O BOX 37428
RALEIGH, NC 27627

COPY MAILED
NOV 29 2001
OFFICE OF PETITIONS

In re Application of	:	
Mrinal Kanti Das et al	:	DECISION GRANTING
Application No. 09/878,442	:	PETITION
Filed: June 11, 2001	:	
Attorney Docket No. 5308-168	:	

This is a decision on the paper styled "Petition to Grant Filing Date..." filed on October 19, 2001, which is being treated as a petition under 1.10(d), requesting that the above-identified application be accorded a filing date of June 11, 2001, rather than the presently accorded filing date of June 12, 2001.

Applicants request the earlier filing date on the basis that the application was purportedly deposited in Express Mail service on June 11, 2001, pursuant to 37 CFR 1.10. In support applicants submit, a copy of a U.S. Postal Service (USPS) record styled "Pickup Service Statement for Express Mail, Priority Mail, or Parcel Post" showing that a package bearing Express Mail label No. EL733098355US was picked up by the USPS from counsel's office on June 11, 2001. In further support, the petition is accompanied by a copy of the USPS Track/Confirm system information showing that the package in question was enroute on June 11, 2001. The same Express Mail number was referred to in the copy of the original transmittal letter submitted with the present application.

Since the evidence from the USPS, namely, the Express Mail pickup Service Statement and the USPS Track/Confirm sheet, corroborate a "date-in" of June 11, 2001, the petition is granted. The $130 petition fee is being credited to counsel's deposit account.

A copy of the corrected Filing Receipt is enclosed.

The application is being returned to Technology Center AU 2811 for examination in due course.

Telephone inquires specific to this matter should be directed to Wan Laymon at (703) 306-5685.

Sherry Brinkley

Sherry Brinkley
Petitions Examiner
Office of Petitions
Office of the Deputy Commissioner
for Patent Examination Policy

Enclosure: Corrected Filing Receipt

UNITED STATES PATENT AND TRADEMARK OFFICE

COMMISSIONER FOR PATENTS
UNITED STATES PATENT AND TRADEMARK OFFICE
P.O. BOX 1450
ALEXANDRIA, VA 22313-1450
WWW.USPTO.GOV

Paper No. 14

PETE P. SCOTT
LSI LOGIC CORPORATION
M/S D-106
1551 MCCARTHY BOULEVARD
MILPITAS, CA 95033

COPY MAILED

JUL 2 8 2003

OFFICE OF PETITIONS

In re Application of	:	
Jeffrey S. Brown et al	:	
Application No. 09/878,499	:	ON PETITION
Filed: June 11, 2001	:	
Attorney Docket No. L13.12-0154/00-674	:	

This is a decision on the petition under 37 CFR 1.137(b), filed by facsimile transmission on July 21, 2003, to revive the above-identified application.

The petition is **GRANTED**.

The above-identified application became abandoned for failure to reply within the meaning of 37 CFR 1.113 in a timely manner to the final Office action mailed October 3, 2002, which set a shortened statutory period for reply of three (3) months. A reply under 37 CFR 1.113 is limited to an amendment that *prima facie* places the application in condition for allowance or a Notice of Appeal (and appeal fee required by 37 CFR 1.17(b)). Since the amendment submitted does not *prima facie* placing the application in condition for allowance, no Notice of Appeal (and appeal fee) was timely filed, and no extensions of time under the provisions of 37 CFR 1.136(a) were obtained. Accordingly, the above-identified application became abandoned on January 4, 2003.

The file does not indicate a change of address has been submitted, although the address given on the petition differs from the address of record. If appropriate, a change of address should be filed in accordance with MPEP 601.03. A courtesy copy of this decision is being mailed to the address given on the petition; however, the Office will mail all future correspondence solely to the address of record.

Pursuant to petitioner's authorization, Deposit Account No. 12-2252 was charged a total of $2,050.00 -- $1,300.00 for the petition to revive an unintentionally abandoned application and $750.00 for the request for continued examination (RCE).

Telephone inquiries concerning this decision should be directed to Wan Laymon at (703) 305-9282.

The application file is being forwarded to Technology Center AU 2825 for processing of the request for continued examination (RCE) under 37 CFR 1.114.

Wan Laymon
Petitions Examiner
Office of Petitions
Office of the Deputy Commissioner
for Patent Examination Policy

cc: PETER P. SCOTT
1621 BARBER LN, M/S L-203
MILPITAS, CA 95035

UNITED STATES PATENT AND TRADEMARK OFFICE

Commissioner for Patents
United States Patent and Trademark Office
P.O. Box 1450
Alexandria, VA 22313-1450
www.uspto.gov

FOGG, SLIFER & POLGLAZE, P.A.
P.O. BOX 581009
MINNEAPOLIS MN 55458-1009

COPY MAILED

AUG 18 2005

OFFICE OF PETITIONS

In re Application of
Oleg Sher et al.
Application No. 09/878,500
Filed:June 11, 2001
Attorney Docket No. 100.195US01

ON PETITION

This is a decision on the petition filed August 8, 2005 under 37 CFR 1.137(b),[1] to revive the above-identified application.

The petition under 37 CFR 1.137 (b) is **GRANTED**.

This application became abandoned February 8, 2005 for failure to timely pay the issue fee on or before February 7, 2005. Accordingly, a Notice of Abandonment was mailed March 14, 2005.

Effective December 8, 2004, the issue fee was set at $1400.00, instead of $1370.00 as was the fee when the Notice of Allowance was mailed. Therefore, the funds submitted ($1370.00 + $300.00 + $30.00) have been applied to the issue fee and the publication fee and per petitioner's authorization, deposit account no. 02-2666 has been charged in the amount of $30.00 for the advance copies of the patent.

Additionally, there is no indication that petitioner herein was ever empowered to prosecute the instant application. If petitioner desires to receive future correspondence regarding this application, the appropriate power of attorney documentation must be submitted. A courtesy copy of this decision will be mailed to petitioner. However, all future correspondence will be directed to the address of record until such time as

---

[1] Effective December 1, 1997, the provisions of 37 CFR 1.137(b) now provide that where the delay in reply was unintentional, a petition may be filed to revive an abandoned application or a lapsed patent pursuant to 37 CFR 1.137(b). A grantable petition filed under the provisions of 37 CFR 1.137(b) must be accompanied by:

(1) the required reply, unless previously filed. In a nonprovisional application abandoned for failure to prosecute, the required reply may be met by the filing of a continuing application. In a nonprovisional application filed on or after June 8, 1995, and abandoned for failure to prosecute, the required reply may also be met by the filing of a request for continued examination in compliance with § 1.114. In an application or patent, abandoned or lapsed for failure to pay the issue fee or any portion thereof, the required reply must be the payment of the issue fee or any outstanding balance thereof.

(2) the petition fee as set forth in 37 CFR 1.17(m);

(3) a statement that the entire delay in filing the required reply from the due date for the reply until the filing of a grantable petition pursuant to 37 CFR 1.137(b) was unintentional. The Commissioner may required additional information where there is a question whether the delay was unintentional; and

(4) any terminal disclaimer (and fee as set forth in 37 CFR 1.20(d)) required pursuant to 37 CFR 1.137(c)).

appropriate instructions are received to the contrary.

All other requirements of 37 CFR 1.137(b) having now been met, this application file is being forwarded to the Publishing Division for review of the drawings submitted with the petition and to be processed into a patent.

Telephone inquiries concerning this matter may be directed to the undersigned Petitions Attorney at (571) 272-3212.

Patricia Faison-Ball
Senior Petitions Attorney
Office of Petitions

cc:
BLAKELY, SOKOLOFF, TAYLOR & ZAFMAN LLP
12400 WILSHIRE BLVD.,
SEVENTH FLOOR
LOS ANGELES, CA 90025

UNITED STATES PATENT AND TRADEMARK OFFICE

Commissioner for Patents
United States Patent and Trademark Office
P.O. Box 1450
Alexandria, VA 22313-1450
www.uspto.gov

FLIESLER MEYER LLP
650 CALIFORNIA STREET
14TH FLOOR
SAN FRANCISCO CA 94108

COPY MAILED

AUG 14 2009

OFFICE OF PETITIONS

In re Patent No. 7,392,546	:	
Paul Patrick	:	LETTER REGARDING PATENT
Issue Date: June 24, 2008	:	TERM ADJUSTMENT AND
Application No. 09/878,536	:	NOTICE OF INTENT TO ISSUE
Filed: June 11, 2001	:	CERTIFICATE OF CORRECTION
Attorney Docket No. ORACL-01084US0	:	

This letter is in response to the "REQUEST FOR CERTIFICATE OF CORRECTION," filed April 17, 2009, which is properly being treated as a request that the determination of patent term adjustment under 35 U.S.C. 154(b) be reviewed for accuracy pursuant to patentee's duty of good faith and candor to the Office.

The request for review of the determination of patent term adjustment (PTA) is **GRANTED to the extent indicated herein**.

The patent term adjustment indicated in the patent is to be corrected by issuance of a certificate of correction showing a patent term adjustment of **four hundred eighty-nine (489) days**.

Patentee is given **THIRTY (30) DAYS or ONE (1) MONTH, whichever is longer**, from the mail date of this decision to respond. No extensions of time will be granted under 37 CFR 1.136.

On June 24, 2008, the above-identified application matured into U.S. Patent No. 7,392,546, with a revised patent term adjustment of 611 days. On April 17, 2009, patentee submitted the instant comment requesting correction of the patent by issuance of a certificate of correction showing a patent term adjustment of

550 days. Patentee does not state any basis for the request for review of the patent term adjustment.

The record reveals that patentee should have been assessed a delay under 37 CFR 1.704(b)[1] for filing a reply in the form of a Request for Continued Examination (RCE) on January 26, 2006, in excess of the three-month period from the August 26, 2005 mailing date of the final Office action. Thus, patentee failed to engage in reasonable efforts to conclude prosecution of this application. Accordingly, the period of adjustment should have been reduced under 37 CFR 1.704(b) by 61 days, the number of days in the period beginning on the day after the date that is three months after the date of mailing of the final Office action, November 27, 2005, ending on the date the RCE was filed, January 26, 2006. A period of reduction of 61 days will be entered.

Additionally, patentee should have been assessed a delay under 37 CFR 1.704(b) for the filing of a reply in the form of a RCE on August 20, 2007, in excess of the three-month period from the April 18, 2007 mailing date of the final Office action. Accordingly, the period of adjustment should have been reduced under 37 CFR 1.704(b) by 33 days, the number of days in the period beginning on the day after the date that is three months after the date of mailing of the final Office action, July 19,

---

[1] 37 CFR 1.704(b) states:

> With respect to the grounds for adjustment set forth in §§ 1.702(a) through (e), and in particular the ground of adjustment set forth in § 1.702(b), an applicant shall be deemed to have failed to engage in reasonable efforts to conclude processing or examination of an application for the cumulative total of any periods of time in excess of three months that are taken to reply to any notice or action by the Office making any rejection, objection, argument, or other request, measuring such three-month period from the date the notice or action was mailed or given to the applicant, in which case the period of adjustment set forth in § 1.703 shall be reduced by the number of days, if any, beginning on the day after the date that is three months after the date of mailing or transmission of the Office communication notifying the applicant of the rejection, objection, argument, or other request and ending on the date the reply was filed. The period, or shortened statutory period, for reply that is set in the Office action or notice has no effect on the three-month period set forth in this paragraph.

2007, ending on the date the RCE was filed, August 20, 2007. A period of reduction of 33 days will be entered.

Further, a review of the application history confirms that the period of adjustment should have been reduced pursuant to 37 CFR 1.704(c)(8) for the filing of the Information Disclosure Statements on February 3, 2006 and October 18, 2007.

37 CFR 1.704(c)(8) provides:

> Submission of a supplemental reply or other paper, other than a supplemental reply or other paper expressly requested by the examiner, after a reply has been filed, in which case the period of adjustment set forth in § 1.703 shall be reduced by the number of days, if any, beginning on the day after the date the initial reply was filed and ending on the date that the supplemental reply or other such paper was filed.

It is undisputed that patentee submitted Information Disclosure Statements on February 3, 2006 and October 18, 2007, after filing responses on January 26, 2006 and August 20, 2007, respectively. The record does not support a conclusion that the examiner expressly requested either the Information Disclosure Statement filed on February 3, 2006 or on October 18, 2007. Further, a review of the Information Disclosure Statements filed on February 3, 2006 and October 18, 2007, reveals that patentee did not include statements under 37 CFR 1.704(d).[2]

---

[2] Pursuant to 37 CFR 1.704(d):

> A paper containing only an information disclosure statement in compliance with §§ 1.97 and 1.98 will not be considered a failure to engage in reasonable efforts to conclude prosecution (processing or examination) of the application under paragraphs (c)(6), (c)(8), (c)(9), or (c)(10) of this section if it is accompanied by a statement that each item of information contained in the information disclosure statement was **first** cited in **any** communication from a foreign patent office in a counterpart application and that this communication was not received by any individual designated in § 1.56(c) more than thirty days prior to the filing of the information disclosure statement. This thirty-day period is not extendable.

Emphasis added.

The Office notes that patentee did not check the box next to the PTA Statement under 37 C.F.R. § 1.704(d) on the Information Disclosure

Thus, patentee failed to engage in reasonable efforts to conclude prosecution of the application.

Pursuant to 37 CFR 1.704(c)(8), the period of adjustment should have been reduced by eight (8) days, the number of days beginning on the day after the date the reply was filed, January 27, 2006, and ending on the date that the Information Disclosure Statement was filed, February 3, 2006.

Additionally, the period of adjustment should have been reduced by fifty-nine (59) days, the number of days beginning on the day after the date the reply was filed, August 20, 2007, and ending on the date that the Information Disclosure Statement was filed, October 18, 2007.

A period of reduction of 8 days will be entered for the submission of the Information Disclosure Statement on February 3, 2006. Additionally, a period of reduction of 59 days will be entered for the submission of the Information Disclosure Statement on October 18, 2007.

Lastly, a review of the record reveals that the period of delay of 38 days, pursuant to 37 CFR 1.704(c)(10), for the filing of the Replacement Sheet on May 8, 2008, after the mailing of the notice of allowance, was assessed in error.

37 CFR 1.704(c)(10) provides:

> Submission of an amendment under § 1.312 or other paper after a notice of allowance has been given or mailed, in which case the period of adjustment set forth in § 1.703 shall be reduced by the lesser of:
>
> (i) The number of days, if any, beginning on the date the amendment under § 1.312 or other paper was filed and ending on the mailing date of the Office action or notice in response to the amendment under § 1.312 or such other paper;
>
> or

Statements. However, even if patentee had checked the box, the Statement under 37 CFR 1.704(b) as it appears on the Information Disclosure Statements is not proper.

(ii) Four months;

It is noted that the Office incorrectly calculated the period of reduction under 37 CFR 1.704(c)(10) from the filing date of the Replacement Sheet, May 8, 2008, to the date the patent issued, June 24, 2008. However, the Office mailed a "Response to Rule 312 Communication" in response to the Replacement Sheet on May 16, 2008. As the Office responded to the Replacement Sheet on May 16, 2008, this date should have been used for the purpose of calculating the period of reduction under 37 CFR 1.704(c)(10). Accordingly, the period of adjustment of the term of the patent should have been reduced by 9 days, counting the number of days beginning on the date the Replacement Sheet was filed, May 8, 2008, and ending on the mailing date of the "Response to Rule 312 Communication", May 16, 2008.

As this period of reduction of 9 days for the filing of the Replacement Sheet totally overlaps[3] with the 9-day reduction under 37 CFR 1.704(c)(10) for the filing of the Amendment under 1.312 and the IDS on May 8, 2008, no additional days of reduction will be entered for the filing of the Replacement Sheet. Accordingly, the period of reduction of 39 days will be removed.

In view thereof, the patent should have issued with a patent term adjustment of **489 days** (878 days of Office delay - 389 days (94 + 13 + 61 + 8 + 35 + 57 + 20 + 33 + 59 + 9) of applicant delay).

As this letter was submitted as an advisement to the Office of an error in patentee's favor, the Office will not assess the $200.00 fee under 37 CFR 1.18(e). The Office thanks patentee for patentee's good faith and candor in bringing this to the attention of the Office.

This matter is being referred to the Certificates of Correction Branch for issuance of a certificate of correction in order to rectify this error. The Office will issue a certificate of

---

[3] 37 CFR 1.704(c) provides that "[c]ircumstances that constitute a failure of the applicant to engage in reasonable efforts to conclude processing or examination of an application … will result in the following reduction of the period of adjustment set forth in § 1.703 to the extent that the periods are not overlapping."

correction indicating that the term of the above-identified patent is extended or adjusted by **489 days**.

Telephone inquiries specific to this matter should be directed to the undersigned at (571) 272-3211.

Christina Tartera Donnell

Christina Tartera Donnell
Senior Petitions Attorney
Office of Petitions

Enclosure: Copy of DRAFT Certificate of Correction

DRAFT COPY

UNITED STATES PATENT AND TRADEMARK OFFICE

CERTIFICATE OF CORRECTION

PATENT : 7,392,546 B2

DATED : Jun. 24, 2008

INVENTOR(S) : Patrick

It is certified that error appears in the above-identified patent and that said Letters Patent is hereby corrected as shown below:

On the cover page,

[*] Notice: Subject to any disclaimer, the term of this patent is extended or adjusted under 35 USC 154(b) by (611) days

Delete the phrase "by 611 days" and insert – by 489 days--

UNITED STATES PATENT AND TRADEMARK OFFICE

COMMISSIONER FOR PATENTS
UNITED STATES PATENT AND TRADEMARK OFFICE
P.O. BOX 1450
ALEXANDRIA, VA 22313-1450
www.uspto.gov

Finnegan Henderson Farabow
Garrett & Dunner LLP
Attn: Leslie A. McDonell
1300 I Street NW
Washington DC 20005-3315

COPY MAILED

SEP 1 1 2003

OFFICE OF PETITIONS

Applicant: Sullivan et al.
Appl. No.: 9/878,574
Filing Date: June 11, 2001
Title: HUMAN GDP-MANNOSE 4,6 DEHYDRATASE
Attorney Docket No.: GFN-5285D3CPACN
Pub. No.: US 2002/0110548 A1
Pub. Date: August 15, 2002

Patent application publication No. US 2002/0110548 A1 published on August 15, 2002, without a copy of the appropriate sequence listing.

This is a decision to *sua sponte* issue a corrected patent application publication, publishing the application as originally filed.

The corrected patent application publication will be published in due course.

Inquires concerning this communication should be directed to Mark Polutta at (703) 308-8122 (voice) or (703) 746-3465 (facsimile).

Mark O. Polutta
Office of Patent Legal Administration
Office of the Deputy Commissioner
for Patent Examination Policy

UNITED STATES PATENT AND TRADEMARK OFFICE

COMMISSIONER FOR PATENTS
UNITED STATES PATENT AND TRADEMARK OFFICE
P.O. BOX 1450
ALEXANDRIA, VA 22313-1450
www.uspto.gov

Paper No. 13

JEFFREY FURR
253 N. MAIN STREET
JOHNSTOWN OH 43031

COPY MAILED

FEB 0 4 2004

OFFICE OF PETITIONS

In re Application of :
Steve Guilkey :
Application No. 09/878,578 :
Filed: June 11, 2001 :
Title: DUNNAGE TRANSPORT ORGANIZER :

DECISION ON PETITION

This is a decision on the petition under § 1.137(a) filed November 10, 2003, to revive the above-identified application based on unavoidable delay.

The petition under § 1.137(a) is **DISMISSED**.

Any request for reconsideration of this decision must be submitted within **TWO (2) MONTHS** from the mail date of this decision. The reconsideration request should include a cover letter entitled "Renewed Petition under 37 CFR 1.137(a)" or "Renewed Petition under 37 CFR 1.137(b)," as appropriate. Extensions of time under § 1.136(a) are permitted.

BACKGROUND

The above-identified application became abandoned for failure to timely file a reply to the final rejection mailed March 26, 2003. This Office action set a three (3) month shortened statutory period for reply, with extensions of time obtainable under § 1.136(a). No reply having been filed and no extension obtained, the application became abandoned effective June 27, 2003. A Notice of Abandonment was mailed on October 28, 2003.

Consideration of Petition under § 1.137(a)

A grantable petition to revive an unavoidably abandoned application under 37 CFR 1.137(a) must be accompanied by: (1) the reply required to the outstanding Office action or notice, unless previously filed; (2) the petition fee set forth in 37 CFR 1.17(l); (3) a showing to the satisfaction of the Commissioner that the entire delay in filing the required reply from the due date for the reply until the filing of a grantable petition pursuant to this paragraph was unavoidable; and (4) any terminal disclaimer (and fee as set forth in § 1.20(d)) required pursuant to § 1.137(d). Requirements (1) and (3) are at issue in this case.

As to requirement (1), the proposed reply to a final Office

action required for consideration of a petition to revive must be either (1) a Notice of Appeal (and fee required by law), (2) an amendment that *prima facie* places the application in condition for allowance, (3) the filing of a continuing application, (4) a request for continuing examination under §1.114, or (5) if applicable, a § 1.129(a) submission. Petitioner's only submission, an amendment, has been determined not to place the application in condition for allowance. As such, the reply is not sufficient to revive this application. See enclosed Advisory Action.

The burden of showing the cause of the delay is on the person seeking to revive the application. Smith v. Mossinghoff, 671 F.2d 533, 538, 213 U.S.P.Q. 977, 982 (D.C. Cir. 1982). Decisions on reviving abandoned applications on the basis of "unavoidable" delay have adopted the "reasonably prudent person standard" in determining if the delay was unavoidable:

> The word 'unavoidable' ... is applicable to ordinary human affairs, and requires no more or greater care or diligence than is generally used and observed by prudent and careful men in relation to their most important business. It permits them in the exercise of this care to rely upon the ordinary and trustworthy agencies of mail and telegraph, worthy and reliable employees, and such other means and instrumentalities as are usually employed in such important business. If unexpectedly, or through the unforeseen fault or imperfection of these agencies and instrumentalities, there occurs a failure, it may properly be said to be unavoidable, all other conditions of promptness in its rectification being present.

In re Mattullath, 38 App. D.C. 497, 514-15 (1912)(*quoting* Ex parte Pratt, 1887 Dec. Comm'r Pat. 31, 32-33 (1887)); see also Winkler v. Ladd, 221 F. Supp. 550, 552, 138 U.S.P.Q. 666, 167-68 (D.D.C. 1963), aff'd, 143 U.S.P.Q. 172 (D.C. Cir. 1963); Ex parte Henrich, 1913 Dec. Comm'r Pat. 139, 141 (1913). In addition, decisions on revival are made on a "case-by-case basis, taking all the facts and circumstances into account." Smith, 671 F.2d at 538, 213 U.S.P.Q. at 982. Nonetheless, a petition cannot be granted where a petitioner has failed to meet his or her burden of establishing that the entire delay was "unavoidable." Haines v. Quigg, 673 F. Supp. 314, 316-17, 5 U.S.P.Q.2d 1130, 1131-32 (N.D. Ind. 1987).

Petitioner's explanation has been considered, but not found adequate to meet his burden of showing that the delay was unavoidable. Petitioner states that a response was timely submitted by facsimile transmission on June 13, 2003. However, petitioner does not submit *prima facie* evidence in the form of a facsimile confirmation that the paper was indeed timely filed. See 37 CFR 1.8(b)[1]. In fact, petitioner submits no evidence of

---

[1] 37 CFR 1.8(b). In the event that correspondence is considered timely filed by being mailed or transmitted in accordance with paragraph (a) of this section, but not received in the Patent and Trademark Office, and the application is held to be abandoned or the proceeding is dismissed, terminated, or decided with prejudice, the correspondence will be considered

the alleged previous timely filing. Additionally, the application file is the Official record of the papers received in the Office in an application. The application file for the instant application has been reviewed and it has been confirmed that no response was received in the Office on June 13, 2003 as no such response is present in the application file.

Alternative Venue under § 1.137(b)

The showing required under §1.137(a) is exacting, and petitioner has not met that showing. Petitioner is not precluded from providing further evidence on request for reconsideration to show that the facts and circumstances of the delay in this case warrant revival under § 1.137(a). However, petitioner is advised of an alternative venue for relief, under § 1.137(b).

Petitioner may file a request for reconsideration pursuant to 37 CFR 1.137(b) on the basis of unintentional delay. A grantable petition under § 1.137(b) must be accompanied by: (1) the reply required to the outstanding Office action or notice, unless previously filed; (2) the petition fee set forth in 37 C.F.R. § 1.17(m); (3) a statement that the "entire delay in filing the required reply from the due date for the reply until the filing of a grantable petition pursuant to this paragraph was unintentional"; and (4) any terminal disclaimer (and fee as set forth in § 1.20(d)) required pursuant to § 1.137(d). (Item (4) is not required in this case).

The filing of a petition under 37 CFR 1.137(b) cannot be intentionally delayed and therefore must be filed promptly. A person seeking revival due to unintentional delay cannot make a statement that the delay was unintentional unless the entire delay, including the delay from the date it was discovered that the application was abandoned until the filing of the petition to revive under 37 CFR 1.137(b), was unintentional. A statement that the delay was unintentional is not appropriate if petitioner intentionally delayed the filing of a petition for revival under 37 CFR 1.137(b).

---

timely if the party who forwarded such correspondence:
(1) Informs the Office of the previous mailing or transmission of the correspondence promptly after becoming aware that the Office has no evidence of receipt of the correspondence;
(2) Supplies an additional copy of the previously mailed or transmitted correspondence and certificate; and
(3) Includes a statement which attests on a personal knowledge basis or to the satisfaction of the Commissioner to the previous timely mailing or transmission.

If the correspondence was sent by facsimile transmission, a copy of the sending unit's report confirming transmission may be used to support this statement.

(c) The Office may require additional evidence to determine if the correspondence was timely filed.

Further correspondence with respect to this matter should be addressed as follows:

By mail: Mail Stop Petition
Commissioner for Patents
P.O. Box 1450
Alexandria, VA 22313-1450

By FAX: (703) 872-9306
Attn: Office of Petitions
ATTN: NANCY JOHNSON

By hand: CUSTOMER SERVICE WINDOW
2011 South Clark Place
Crystal Plaza Two Lobby
Arlington, VA 22202

Telephone inquiries specific to this decision may be directed to the undersigned at (703) 305-0309.

Nancy Johnson

Nancy Johnson
Senior Petitions Attorney
Office of Petitions

Enclosure: Advisory Action

Advisory Action	Application No. 09/878,578	Applicant(s) GUILKEY, STEVE	
	Examiner Stephen Gordon	Art Unit 3612	

--The MAILING DATE of this communication appears on the cover sheet with the correspondence address --

THE REPLY FILED 10 November 2003 FAILS TO PLACE THIS APPLICATION IN CONDITION FOR ALLOWANCE. Therefore, further action by the applicant is required to avoid abandonment of this application. A proper reply to a final rejection under 37 CFR 1.113 may only be either: (1) a timely filed amendment which places the application in condition for allowance; (2) a timely filed Notice of Appeal (with appeal fee); or (3) a timely filed Request for Continued Examination (RCE) in compliance with 37 CFR 1.114.

PERIOD FOR REPLY [check either a) or b)]

a) ☒ The period for reply expires 3 months from the mailing date of the final rejection.

b) ☐ The period for reply expires on: (1) the mailing date of this Advisory Action, or (2) the date set forth in the final rejection, whichever is later. In no event, however, will the statutory period for reply expire later than SIX MONTHS from the mailing date of the final rejection.
ONLY CHECK THIS BOX WHEN THE FIRST REPLY WAS FILED WITHIN TWO MONTHS OF THE FINAL REJECTION. See MPEP 706.07(f).

Extensions of time may be obtained under 37 CFR 1.136(a). The date on which the petition under 37 CFR 1.136(a) and the appropriate extension fee have been filed is the date for purposes of determining the period of extension and the corresponding amount of the fee. The appropriate extension fee under 37 CFR 1.17(a) is calculated from: (1) the expiration date of the shortened statutory period for reply originally set in the final Office action; or (2) as set forth in (b) above, if checked. Any reply received by the Office later than three months after the mailing date of the final rejection, even if timely filed, may reduce any earned patent term adjustment. See 37 CFR 1.704(b).

1.☐ A Notice of Appeal was filed on _____. Appellant's Brief must be filed within the period set forth in 37 CFR 1.192(a), or any extension thereof (37 CFR 1.191(d)), to avoid dismissal of the appeal.

2.☒ The proposed amendment(s) will not be entered because:

(a) ☒ they raise new issues that would require further consideration and/or search (see NOTE below);

(b) ☐ they raise the issue of new matter (see Note below);

(c) ☐ they are not deemed to place the application in better form for appeal by materially reducing or simplifying the issues for appeal; and/or

(d) ☐ they present additional claims without canceling a corresponding number of finally rejected claims.

NOTE: *See Continuation Sheet*.

3.☐ Applicant's reply has overcome the following rejection(s): _____.

4.☐ Newly proposed or amended claim(s) _____ would be allowable if submitted in a separate, timely filed amendment canceling the non-allowable claim(s).

5.☐ The a)☐ affidavit, b)☐ exhibit, or c)☐ request for reconsideration has been considered but does NOT place the application in condition for allowance because: _____.

6.☐ The affidavit or exhibit will NOT be considered because it is not directed SOLELY to issues which were newly raised by the Examiner in the final rejection.

7.☒ For purposes of Appeal, the proposed amendment(s) a)☒ will not be entered or b)☐ will be entered and an explanation of how the new or amended claims would be rejected is provided below or appended.

The status of the claim(s) is (or will be) as follows:

Claim(s) allowed: *as per the final rejection*.

Claim(s) objected to: *as per the final rejection*.

Claim(s) rejected: *as per the final rejection*.

Claim(s) withdrawn from consideration: *as per the final rejection*.

8.☐ The drawing correction filed on _____ is a)☐ approved or b)☐ disapproved by the Examiner.

9.☐ Note the attached Information Disclosure Statement(s)(PTO-1449) Paper No(s). _____.

10.☒ Other: *see attached*

Stephen Gordon
Primary Examiner
Art Unit: 3612

Continuation of 2. NOTE: At least new claim 17 is not clearly allowable and would require further consideration and/or search..

Applicant should additionally note with respect to the submission of 11-10-03, regarding applicant's proposed amendment to the drawing figure 5 and corresponding amendment to the paragraph on page 5, the term "raise edge 112" in line 5 of the replacement paragraph should be changed to --raised edge 512-- if applicant's proposed changes are maintained. Applicant's proposed amendment does overcome the objection to page 6 of the instant specification raised in the last office action. Finally, the terminology "withdrawn" with respect to claims 15 and 16 is not completely understood. Is it applicant's intent to "cancel" the claims in response to the previous rejections? The status of claims 15-16 should be clarified.

UNITED STATES PATENT AND TRADEMARK OFFICE

Commissioner for Patents
United States Patent and Trademark Office
P.O. Box 1450
Alexandria, VA 22313-1450
www.uspto.gov

Paper No. 16

JEFFREY FURR
253 N. MAIN STREET
JOHNSTOWN OH 43031

COPY MAILED

JUN 29 2005

OFFICE OF PETITIONS

In re Application of :
Steve Guilkey :
Application No. 09/878,578 :
Filed: June 11, 2001 :
Title: DUNNAGE TRANSPORT ORGANIZER :

DECISION ON PETITION

This is a decision on the petition under § 1.137(b) filed June 6, 2005, to revive the above-identified application based on unintentional delay.

The petition under § 1.137(b) is **DISMISSED**.

Any request for reconsideration of this decision must be submitted within **TWO (2) MONTHS** from the mail date of this decision. The reconsideration request should include a cover letter entitled "Renewed Petition under 37 CFR 1.137(b)." Extensions of time under § 1.136(a) are permitted.

The above-identified application became abandoned effective June 27, 2003 for failure to timely file a reply to the final rejection mailed March 26, 2003. A Notice of Abandonment was mailed on October 28, 2003.

By decision mailed February 4, 2004, a prior petition to revive based on unavoidable delay filed November 10, 2003 was dismissed. Petitioner failed to submit the required reply or to make an adequate showing of unavoidable delay. As to the required reply, petitioner was specifically advised that the reply filed on petition did not place the application in condition for allowance, and as such, the reply was not sufficient to revive the application. An advisory action was enclosed with the decision.

On instant petition under § 1.137(b), applicant submitted the petition fee pursuant to 37 CFR 1.17(m) and made the required statement of unintentional delay. However, as to the required reply, applicant resubmitted the reply submitted on petition filed November 10, 2003. The petition includes no basis for making a determination that this reply should now be considered sufficient. Thus, it is concluded that this reply continues to be insufficient to revive the application (Another copy of the advisory action is enclosed). Accordingly, the petition must be dismissed.

Petitioner is reminded that the proposed reply to a final Office action required for consideration of a petition to revive must be either (1) a Notice of Appeal (and fee required by law), (2) an amendment that *prima facie* places the application in condition for allowance, (3) the filing of a continuing application, (4) a request for continuing examination under §1.114, or (5) if applicable, a § 1.129(a) submission.

Moreover, in the original dismissal, petitioner was advised that the filing of a petition under 37 CFR 1.137(b) cannot be intentionally delayed and therefore must be filed promptly. However, the instant petition was filed more than a year after the mailing date of the dismissal mailed February 4, 2004. Accordingly, any renewed petition under § 1.137(b) should set forth a basis for concluding that the delay in filing a petition under § 1.137(b) from the time of receipt of the decision mailed February 4, 2004 to the filing of the instant petition on June 6, 2005 should be considered unintentional within the meaning of § 1.137(b).

In sum, any renewed petition under § 1.137(b) to be grantable must include:

1. The required reply
2. A showing that the delay in filing the unintentional petition was unintentional, and
3. Any required extension of time fees, if the response is filed more than 2 months after the mailing of this decision.

Further correspondence with respect to this matter should be addressed as follows:

By mail:	Mail Stop Petition Commissioner for Patents P.O. Box 1450 Alexandria, VA 22313-1450
By fax:	(703) 872-9306 ATTN: Office of Petitions
By hand:	Customer Service Window Randolph Building 401 Dulany Street Alexandria, VA 22314

Telephone inquiries specific to this decision may be directed to the undersigned at (571) 272-3219.

Nancy Johnson

Nancy Johnson
Senior Petitions Attorney
Office of Petitions

Enclosure: Advisory Action

UNITED STATES PATENT AND TRADEMARK OFFICE

Commissioner for Patents
United States Patent and Trademark Office
P.O. Box 1450
Alexandria, VA 22313-1450
www.uspto.gov

Paper No. 19

JEFFREY FURR
253 N. MAIN STREET
JOHNSTOWN, OH 43031

COPY MAILED

NOV 15 2005

OFFICE OF PETITIONS

In re Application of	:	
Steve Guilkey	:	
Application No. 09/878,578	:	DECISION ON PETITION
Filed: June 11, 2001	:	
Title: DUNNAGE TRANSPORT ORGANIZER	:	

This is a decision on the petition under § 1.137(b) filed August 29, 2005, to revive the above-identified application based on unintentional delay.

The petition under § 1.137(b) is **GRANTED**.

The above-identified application became abandoned effective June 27, 2003 for failure to timely file a reply to the final rejection mailed March 26, 2003. A Notice of Abandonment was mailed on October 28, 2003.

By decision mailed February 4, 2004, a prior petition to revive based on unavoidable delay filed November 10, 2003 was dismissed. Petitioner failed to submit the required reply or to make an adequate showing of unavoidable delay. As to the required reply, petitioner was specifically advised that the reply filed on petition did not place the application in condition for allowance, and as such, the reply was not sufficient to revive the application. An advisory action was enclosed with the decision. By decision mailed June 29, 2005, a petition to revive based on unintentional delay filed June 6, 2005 was dismissed. Applicant had resubmitted the reply submitted on petition filed November 10, 2003. Accordingly, the petition was dismissed.

On instant petition, applicants have submitted another amendment; and an explanation for their delay in not filing until June 6, 2005, a petition to revive in response to the dismissal mailed February 4, 2004.

Petitioner has now met all requirements for a grantable petition pursuant to 1.137(b). The petition includes the reply required to revive the application, and the petition fee. Further, the petition includes an adequate showing of unintentional delay for all of the relevant periods.

The application file is being forwarded to Technology Center AU 3612 for consideration by the examiner of the amendment filed August 29, 2005.

Telephone inquiries specific to this decision may be directed to the undersigned at (571) 272-3219.

Nancy Johnson
Senior Petitions Attorney
Office of Petitions

UNITED STATES PATENT AND TRADEMARK OFFICE

COMMISSIONER FOR PATENTS
UNITED STATES PATENT AND TRADEMARK OFFICE
WASHINGTON, D.C. 20231
www.uspto.gov

MAIL

FEB 06 2009

DIRECTOR OFFICE
TECHNOLOGY CENTER 2600

Ellen Marcie Emas
Frommer Lawrence & Haug LLP
745 Fifth Avenue 10th Fl.
New York, NY 10151

In re Application of: Susumu Nakagawa Application No. 09/878,581 Attorney Docket No. 450100-03278 Filed: June 11, 2001 For: IMAGE CONTENT AND ADVERTISEMENT DATA PROVIDING METHOD, SYSTEM AND APPARATUS	)))))	**DECISION ON PETITION TO WITHDRAW RESTRICTION REQUIREMENT UNDER 37 CFR §1.144**

This is a decision on the petition filed August 04, 2008 under 37 C.F.R. §1.144 and 37 C.F.R. §1.181 to withdraw an outstanding restriction requirement.

The petition is **GRANTED**.

RELEVANT PROSECUTION HISTORY

May 20, 2005	A restriction requirement of subcombinations useable together grouping claims 1-22 and 28-30 in one group and in the second group claims 23-27 and 31 was mailed out.
June 13, 2005	A response to the restriction requirement electing claims 1-22 and 28-30 without traverse was the filed by petitioner.
May 22, 2008	A second restriction requirement was mailed out with claims 1-9, 18, 20, 28 and 32-36 in group I, claims 10-17, 19, 22, 30 and 37 in group II and claims 21 and 29 in group III. Again, subcombinations useable together was the reason.
July 17, 2008	A second restriction requirement was made final.
August 1, 2008	A petition was filed asking for the restriction to be withdrawn as it is improper and claims 1-22, 28-30 and 32-37 be examined.

REGULATIONS AND PRACTICE

37 C.F.R. § 1.143 states:

> If the applicant disagrees with the requirement for restriction, he may request reconsideration and withdrawal or modification of the requirement, giving the reasons therefor. (See § 1.111). In requesting reconsideration the applicant must indicate a provisional election of one invention for prosecution, which invention shall be the one elected in the event the requirement becomes final. The requirement for restriction will be reconsidered on such a request. If the requirement is repeated and made final, the examiner will at the same time act on the claims to the invention elected.

37 C.F.R. § 1.144 states:

> After a final requirement for restriction, the applicant, in addition to making any reply due on the remainder of the action, may petition the Commissioner to review the requirement ... A petition will not be considered if reconsideration of the requirement was not requested (see § 1.181).

37 C.F.R. § 1.145 states:

> If, after an office action on an application, the applicant presents claims directed to an invention distinct from and independent of the invention previously claimed, the applicant will be required to restrict the claims to the invention previously claimed if the amendment is entered, subject to reconsideration and review as provided in § § 1.143 and 1.144.

37 C.F.R. § 1.181 states:

> (a) Petition may be taken to the Commissioner:
> (1) From any action or requirement of any examiner in the ex parte prosecution of an application, or in ex parte or inter partes prosecution of a reexamination proceeding which is not subject to appeal to the Board of Patent Appeals and Interferences or to the court;
> (2) In cases in which a statute or the rules specify that the matter is to be determined directly by or reviewed by the Commissioner; and
> (3) To invoke the supervisory authority of the Commissioner in appropriate circumstances. For petitions in interferences, see § 1.644.
> (b) Any such petition must contain a statement of the facts involved and the point or

points to be reviewed and the action requested. Briefs or memoranda, if any, in support thereof should accompany or be embodied in the petition; and where facts are to be proven, the proof in the form of affidavits or declarations (and exhibits, if any) must accompany the petition.
(c) When a petition is taken from an action or requirement of an examiner in the ex parte prosecution of an application, or in the ex parte or inter partes prosecution of a reexamination proceeding, it may be required that there have been a proper request for reconsideration (§ 1.111) and a repeated action by the examiner. The examiner may be directed by the Commissioner to furnish a written statement, within a specified time, setting forth the reasons for his or her decision upon the matters averred in the petition, supplying a copy to the petitioner.

MPEP § 803 states:

Under the statute an application may properly be required to be restricted to one of two or more claimed inventions only if they are able to support separate patents and they are either independent (MPEP § 806.04 - § 806.04(i)) or distinct (MPEP § 806.05 - § 806.05(i)).
If the search and examination of an entire application can be made without serious burden, the examiner must examine it on the merits, even though it includes claims to independent or distinct inventions.

CRITERIA FOR RESTRICTION BETWEEN PATENTABLY DISTINCT INVENTIONS
There are two criteria for a proper requirement for restriction between patentably distinct inventions:
(A) The inventions must be independent (see MPEP § 802.01, § 806.04, § 808.01) or distinct as claimed (see MPEP § 806.05 - § 806.05(i)); and
(B) There must be a serious burden on the examiner if restriction is required (see MPEP § 803.02, § 806.04(a) - § 806.04(i), § 808.01(a), and § 808.02).... For purposes of the initial requirement, a serious burden on the examiner may be *prima facie* shown if the examiner shows by appropriate explanation of separate classification, or separate status in the art, or a different field of search as defined in MPEP § 808.02....

MPEP § 821.01 states:

Where the initial requirement is traversed, it should be reconsidered. If, upon reconsideration, the examiner is still of the opinion that restriction is proper, it should be repeated and made final in the next Office action. (See MPEP § 803.01.) In doing so, the examiner should reply to the reasons or arguments advanced by applicant in the traverse. Form paragraph 8.25 should be used to make a restriction requirement final.

DECISION

37 C.F.R. § 1.181(c) requires that an action by an examiner, to be properly petitionable, must be followed by a request for reconsideration, and a repeated action by the examiner. 37 C.F.R. § 1.144 states that the applicant may petition the Commissioner after a final requirement for the restriction has been made.

In the above-identified application, applicant filed a request for reconsideration prior to the petition of August 1, 2008, in accordance with 37 C.F.R. § 1.143.

The issue presented in the petition is whether the restriction based on original presentation under 37 C.F.R. § 1.145 is proper under the current regulations and practice.

MPEP § 803 sets forth two criteria for a proper restriction requirement between patentably distinct inventions: (A) the inventions must be independent or distinct as claimed and (B) there must be a serious burden on the examiner.

Thus, to be proper, (A) current claims 1-22, 28-30 and 32-37 should be a distinct inventions; specifically, group 1 (claims 1-9, 18, 20, 28 and 32-36) drawn to inserting adverting image in image content, group II (claims 10-17, 19 22, 30 and 37) drawn to providing image content in it's entirety and then inserting advertisements and group III drawn to advertisement logging system must be patentably distinct inventions, and (B) there must be a serious burden on the examiner to search and consider these additional features beyond the search and consideration required for the original claims.

Since the insertion of advertisements into image content obviously includes short or entire image content based on the desire of a viewer or content provider, then groups I and II listed in the second restriction requirement are not distinct.

Further, since the insertion of advertisements (groups I and II) and the advertisement logging system (group III) have already been searched and considered (see original claims 1-22 and 28-30) then there would be no serious additional burden on the examiner to consider these features.

For the above reasons, the petition is **GRANTED**.

The restriction requirement is hereby **WITHDRAWN**.

The application will be forwarded to the examiner for consideration on the merits of claims 1-22, 28-30 and 32-37.

/Christopher Grant/

Christopher Grant
Quality Assurance Specialist
Technology Center 2400
(571) 272-7294

UNITED STATES PATENT AND TRADEMARK OFFICE

COMMISSIONER FOR PATENTS
UNITED STATES PATENT AND TRADEMARK OFFICE
P.O. BOX 1450
ALEXANDRIA, VA 22313-1450
www.uspto.go

Paper No. 10
MAIL

MAR 1 0 2004

DIRECTOR OFFICE
TECHNOLOGY CENTER 2600

John T. Kennedy
DORSEY & WHITNEY, LLP
INTELLECTUAL PROPERTY DEPARTMENT
370 SEVENTEENTH STREET, SUITE 4700
DENVER, CO 80202-5647

In re application of:
RASMUSSEN et al.
Application No. 09/878,615
Filed: June 11, 2001
For: **CONFIGURABLE INFORMATION TICKER FOR INTERACTIVE TELEVISION AND ENHANCED TELEVISION**

DECISION ON REQUEST TO WITHDRAW FROM RECORD

This is a decision on the request to withdraw as attorney/agent of record filed on October 9, 2003.

A grantable request to withdraw as attorney/agent of record must:
(1) indicate the present mailing address of the attorney(s)/agent(s) who seek(s) to withdraw, and
(2) be signed by each attorney/agent seeking to withdraw or clearly be signed on their behalf, and
(3) be *approved* at least thirty (30) days prior to the maximum extendable period for response to any outstanding Office Action, and
(4) indicate the address to which future correspondence should be mailed.

Petitioner has satisfied the requirements for successfully requesting withdrawal. Accordingly, the request is **GRANTED.**

All of the attorneys/agents of record listed in the Request are withdrawn.

All future communications from the Office will be directed to the address listed below until otherwise notified by applicant. Applicant is reminded of the obligation to promptly notify the Patent and Trademark Office of any change in correspondence address to ensure receipt of all communications from the Office.

The file is being returned to TC 2600 Technical Support Staff to update the correspondence address and then will be forwarded to the files repository.

Krista Zele
Special Program Examiner
Technology Center 2600
Communications

cc:
MORRISON & FOERSTER LLP
1650 TYSONS BOULEVARD
SUITE 300
MCLEAN VA 22102

UNITED STATES PATENT AND TRADEMARK OFFICE

COMMISSIONER FOR PATENTS
UNITED STATES PATENT AND TRADEMARK OFFICE
WASHINGTON, D.C. 20231
www.uspto.gov

Paper No. 6

Kathleen A. Tyrrell
66 East Main Street
Marlton, NJ 08053

COPY MAILED

MAY 24 2002

OFFICE OF PETITIONS

In re Application of
Laurencin et al.
Application No. 09/878,641
Filed: June 11, 2001
Attorney Docket No. DRE-0055

ON PETITION

This is a decision on the petition under 37 CFR 1.137(b), filed March 6, 2002, to revive the above-identified application.

The petition is **GRANTED**.

The above-identified application became abandoned for failure to reply in a timely manner to the Notice to File Missing Parts of Application (Notice) mailed July 6, 2001. The Notice set a period for reply of two (2) months from the mail date of the Notice. No extensions of time under the provisions of 37 CFR 1.136(a) were obtained. Accordingly, the above-identified application became abandoned on September 7, 2001.

The application file is being forwarded to the Office of Initial Patent Examination for further processing.

Telephone inquiries concerning this decision should be directed to Latrice Bond at (703) 308-6911.

Latrice Bond

Latrice Bond
Paralegal Specialist
Office of Petitions
Office of the Deputy Commissioner
for Patent Examination Policy

UNITED STATES PATENT AND TRADEMARK OFFICE

COMMISSIONER FOR PATENTS
UNITED STATES PATENT AND TRADEMARK OFFICE
P.O. BOX 1450
ALEXANDRIA, VA 22313-1450
www.uspto.gov

Paper No. 16

MARVIN J. POWELL
1 HIGHLAND AVENUE
BETHLEHEM, PA 18017

COPY MAILED
AUG 21 2003
OFFICE OF PETITIONS

In re Application of :
John Albert Hockman :
Application No. 09/878,642 : ON PETITION
Filed: June 11, 2001 :
Attorney Docket No. 01-016 :

This is a decision on the petition under 37 CFR 1.137(b), filed July 23, 2003, to revive the above-identified application.

The petition is **GRANTED**.

The above-identified application became abandoned for failure to reply in a timely manner to the final Office action mailed October 9, 2002, which set a shortened statutory period for reply of three (3) months. No extensions of time under the provisions of 37 CFR 1.136(a) was obtained. An Advisory action was mailed May 7, 2003 indicating that the reply filed on May 1, 2003 failed to place the application in condition for allowance. Accordingly, the application became abandoned on January 10, 2003.

Telephone inquiries concerning this decision should be directed to the undersigned at (703) 306-5594.

The application file is being forwarded to Technology Center 1700, Art Unit 1731 for processing the Request for Continued Examination under 37 CFR 1.114 filed with the instant petition.

Retta Williams

Retta Williams
Petitions Examiner
Office of Petitions
Office of the Deputy Commissioner
for Patent Examination Policy

UNITED STATES PATENT and TRADEMARK OFFICE
UNDER SECRETARY OF COMMERCE FOR INTELLECTUAL PROPERTY AND
DIRECTOR OF THE UNITED STATES PATENT AND TRADEMARK OFFICE
WASHINGTON, D.C. 20231
WWW.USPTO.GOV

FEB 1 2002

JAN 29 2002

UR
PAPER NO. 4

In re Application of	:	
John A. Hockman	:	DECISION ON PETITION
Serial No. 09/878,642	:	UNDER
Filed: June 11, 2001	:	M.P.E.P. 708.02, I MANUF.
For: METHOD FOR REDUCING THE	:	
BORON REQUIRED IN A GLASS	:	
BATCH		

This is in response to the petition filed July 16, 2001, requesting that the above-identified application be made special under the accelerated examination procedure set forth in M.P.E.P. Section 708.02, Section I: Manufacture (fee paid).

The petition has been considered and found to comply with the requirements set forth under the above-noted section.

If the examiner can make this application special without prejudice to any possible interfering applications, and he/she should make a rigid search for such, he/she is authorized to do so for the next action. Should the application be rejected, the application will not be considered special for the subsequent action unless the applicant promptly makes a bona fide effort to place the application in condition for allowance, even if it is necessary to have an interview with the examiner to accomplish this purpose.

If the examiner finds any interfering application for the same subject matter, he/she should consider such application simultaneously with this case and should state in the official letter of such application that he is taking it out of its turn because of a possible interference.

Should an appeal be taken in this case or should this case become involved in an interference, consideration of the appeal and the interference will be expedited by all

Patent and Trademark Office officials concerned, contingent likewise upon diligent prosecution by the applicant.

After allowance, this case will be given priority for printing. See MPEP 1309.

The petition is GRANTED.

Richard V. Fisher, Director
Technology Center 1700
Chemical and Materials Engineering

Marvin J. Powell
1 Highland Avenue
Bethlehem,PA 18017

UNITED STATES PATENT and TRADEMARK OFFICE
UNDER SECRETARY OF COMMERCE FOR INTELLECTUAL PROPERTY AND
DIRECTOR OF THE UNITED STATES PATENT AND TRADEMARK OFFICE
WASHINGTON, D.C. 20231
WWW.USPTO.GOV

UR
PAPER NO.4

In re Application of
John A. Hockman
Serial No. 09/878,658
Filed: June 11, 2001
For: METHOD OF REDUCING VOLTILIZATION FROM AND INCREASING HOMOGENEITY IN GLASS

DECISION
ON
PETITION
UNDER 708.02,V

This is in response to the petition filed July 16, 2001, requesting that the above-identified application be granted Special Status under Sections 708.02 (V) of the MPEP and 37 CFR 1.102(c). The petition fee although authorized is **not required**.

The petition has been considered and found to comply with the requirements set forth under the above-noted section. Accordingly the petition is **GRANTED.**

Richard V. Fisher

Richard V. Fisher, Director
Technology Center 1700
Chemical and Materials Engineering

Marvin J. Powell
1 Highland Avenue
Bethlehem, PA 18017

UNITED STATES PATENT AND TRADEMARK OFFICE

COMMISSIONER FOR PATENTS
UNITED STATES PATENT AND TRADEMARK OFFICE
P.O. BOX 1450
ALEXANDRIA, VA 22313-1450
www.uspto.gov

PHILIPS INTELLECTUAL PROPERTY & STANDARDS
P.O. BOX 3001
BRIARCLIFF MANOR NY 10510

COPY MAILED

NOV 15 2006

OFFICE OF PETITIONS

In re Application of	:	
Hsieh et al.	:	
Application No. 09/878,677	:	DECISION ON PETITION
Filed: 11 June, 2001	:	UNDER 37 CFR 1.55(c)
Attorney Docket No. PHN 17,803	:	

This is a decision on the petition filed August 8, 2006, which, in view of the facts of this case, is being treated as a petition under 37 CFR 1.55(c) to accept an unintentionally delayed claim under 35 U.S.C. § 119(a)-(d) for benefit of priority to the filing date of prior-filed international Application No. PCT/EP00/11652, filed November 23, 2000.

The petition is **DISMISSED**.

The Office notes that the petition cannot be treated under 37 CFR 1.78(a)(3) to accept an unintentionally delayed claim under 35 U.S.C. §§ 120 and 365(c) for the benefit of priority to prior-filed international Application No. PCT/EP00/11652 because the international application did not designate the United States of America pursuant to 37 CFR 1.78(a)(1).

This application was filed after November 29, 2000, and did not include a reference to the foreign application, for which benefit is now sought, within the later of four months from the actual filing date of the application or sixteen months from the filing date of the prior foreign application. Since the claim for priority is submitted after the period specified in 37 CFR 1.55(a)(1)(i), this is an appropriate petition under the provisions of 37 CFR 1.55(c).

A petition under 37 CFR 1.55(c) to accept an unintentionally delayed claim for priority requires:

(1) The nonprovisional application claiming the benefit of an earlier filing date must be filed on or after November 29, 2000;
(2) the claim submitted with the petition must identify the prior foreign application for which priority is claimed, as well as any foreign application for the same subject matter and having a filing date before that of the application for which priority is claimed, by the application number, country, and the filing date, and be included either in an oath or declaration (37 CFR 1.63(c)(2)) or in an Application Data Sheet (37 CFR 1.76(b)(6));
(3) the surcharge as set forth in 37 CFR 1.17(t);

(4) a statement that the entire delay between the date the claim was due under 37 CFR 1.55(a)(1) and the date the claim was filed was unintentional (the Director may require additional information where there is a question whether the delay was unintentional); and

(5) the above-identified nonprovisional application must be filed within 12 months of the filing date of the foreign application.

The petition fails to comply with item (2) and (4) above.

As to item (2), a review of the file record fails to disclose that the priority information was included in an oath or declaration or in an Application Data Sheet (ADS) in accordance with 37 CFR 1.76(b)(6). Unless provided in an ADS, 37 CFR 1.63(c)(2) requires that the oath or declaration must identify the foreign application for patent (or inventor's certificate) for which priority is claimed under 37 CFR 1.55, and any foreign application having a filing date before that of the application on which priority is claimed, by specifying the application number, country, day, month, and year of its filing. *Note* MPEP 201.14.

As to item (4), the petition does not include a statement that the entire delay between the date the claim was due under 37 CFR 1.55(a)(1) and the date the claim was filed was unintentional.

Lastly, the Office notes that the present nonprovisional application is not entitled to claim the benefit of priority to European foreign Application No. 99204181.4 because the nonprovisional application was filed more than 12 months from the filing date of the foreign application.

In view of the above, if applicant desires to claim the benefit of priority to international Application No. PCT/EP00/11652, applicant must comply with 37 CFR 1.63(c)(2) or 37 CFR 1.76(b)(6), as well as make a proper statement of unintentional delay. Any future petition should include a cover letter and be entitled "Renewed Petition under 37 CFR 1.55(c)."

The petition fee of $1,370.00 will be charged to counsel's deposit account, as authorized in the petition.

Further correspondence with respect to this matter should be addressed as follows:

By mail: Mail Stop PETITIONS
Commissioner for Patents
Post Office Box 1450
Alexandria, VA 22313-1450

By hand: Customer Service Window
Mail Stop Petitions
Randolph Building
401 Dulany Street
Alexandria, VA 22314

By fax: (571) 273-8300
ATTN: Office of Petitions

Any questions concerning this matter may be directed to Senior Petitions Attorney Douglas I. Wood at (571) 272-3231.

Christina Tartera Donnell

Christina Tartera Donnell
Senior Petitions Attorney
Office of Petitions

RECEIVED
CENTRAL FAX CENTER
APR 23 2009

Sughrue
SUGHRUE MION, PLLC

2100 Pennsylvania Avenue, NW
Washington, DC 20037-3213
T 202.293.7060
F 202.293.7860
www.sughrue.com

FAX

Date	April 23, 2009
To	Examiner Son Lam
Of	USPTO, Office of Initial Patent Examination (OIPE)
Fax	1-571-273-8300
From	Sunhee Lee
Subject	copy of Decision on Petition - GRANTED
Our Ref	Q83663
Your Ref	USSN 09/878,712
Pages (including cover sheet)	2

Please call attention to problems with this transmission by return fax or telephone. Thank you.

THE INFORMATION CONTAINED IN THIS COMMUNICATION IS CONFIDENTIAL, MAY BE ATTORNEY-CLIENT PRIVILEGED, AND IS INTENDED ONLY FOR THE USE OF THE ADDRESSEE. UNAUTHORIZED USE, DISCLOSURE OR COPYING IS STRICTLY PROHIBITED AND MAY BE UNLAWFUL. IF YOU HAVE RECEIVED THIS COMMUNICATION IN ERROR, PLEASE IMMEDIATELY NOTIFY US.

Dear Examiner Lam:

As you requested, attached please find a copy of the Decision on Petition - GRANTED dated January 13, 2005, for this application.

Please let us know if you need anything further.

Sincerely,

Heather Beachum on behalf of Sunny Lee

RECEIVED
CENTRAL FAX CENTER
APR 23 2009

CORR

UNITED STATES PATENT AND TRADEMARK OFFICE

Commissioner for Patents
United States Patent and Trademark Office
P.O. Box 1450
Alexandria, VA 22313-1450
www.uspto.gov

DOCKETED
JAN 14 2005

Paper No. 9

SUGHRUE MION, PLLC
2100 PENNSYLVANIA AVENUE, N.W.
SUITE 800
WASHINGTON, DC 20037

COPY MAILED
JAN 13 2005
OFFICE OF PETITIONS

In re Application of	:	
Kwon, et al.	:	
Application No. 09/878,712	:	ON PETITION
Filed: June 11, 2001	:	
Attorney Docket No. Q83663	:	

This is a decision on the petition under 37 CFR 1.137(b), filed December 2, 2004, to revive the above-identified application.

The petition is **GRANTED**.

The above-identified application became abandoned for failure to reply in a timely manner to the Notice to File Missing Parts of Application (Notice) mailed August 9, 2001. The Notice set a period for reply of two (2) months from the mail date of the Notice. No extensions of time under the provisions of 37 CFR 1.136(a) were obtained. Accordingly, the above-identified application became abandoned on October 10, 2001.

The file is being forwarded to the Office of Initial Patent Examination for further processing.

Telephone inquiries concerning this matter may be directed to the undersigned at (571)272-3228.

Edward J. Tannouse
Petitions Attorney
Office of Petitions
United States Patent and Trademark Office

UNITED STATES PATENT AND TRADEMARK OFFICE

Commissioner for Patents
United States Patent and Trademark Office
P.O. Box 1450
Alexandria, VA 22313-1450
www.uspto.gov

Paper No. 9

SUGHRUE MION, PLLC
2100 PENNSYLVANIA AVENUE, N.W.
SUITE 800
WASHINGTON, DC 20037

COPY MAILED

JAN 13 2005

OFFICE OF PETITIONS

In re Application of	:	
Kwon, et al.	:	
Application No. 09/878,712	:	ON PETITION
Filed: June 11, 2001	:	
Attorney Docket No. Q83663	:	

This is a decision on the petition under 37 CFR 1.137(b), filed December 2, 2004, to revive the above-identified application.

The petition is **GRANTED**.

The above-identified application became abandoned for failure to reply in a timely manner to the Notice to File Missing Parts of Application (Notice) mailed August 9, 2001. The Notice set a period for reply of two (2) months from the mail date of the Notice. No extensions of time under the provisions of 37 CFR 1.136(a) were obtained. Accordingly, the above-identified application became abandoned on October 10, 2001.

The file is being forwarded to the Office of Initial Patent Examination for further processing.

Telephone inquiries concerning this matter may be directed to the undersigned at (571)272-3228.

Edward J. Tannouse
Petitions Attorney
Office of Petitions
United States Patent and Trademark Office

UNITED STATES PATENT AND TRADEMARK OFFICE

COMMISSIONER FOR PATENTS
UNITED STATES PATENT AND TRADEMARK OFFICE
P.O. BOX 1450
ALEXANDRIA, VA 22313-1450
www.uspto.go

Paper No. 8

SUGHRUE MION, PLLC
2100 PENNSYLVANIA AVENUE, N.W.
SUITE 800
WASHINGTON, DC 20037

COPY MAILED
JUN 29 2005
OFFICE OF PETITIONS

In re Application of :
Kim et al. :
Application No. 09/878,714 :
Filed: June 11, 2001 :
Attorney Docket No. :
Q83664 :

This is a decision in response to the petition under 37 CFR 1.137(b), filed April 29, 2005, to revive the above-identified application.

This Petition is hereby **granted**.

The above-identified application became abandoned for failure to reply in a timely manner to the Notice to File Missing Parts of Nonprovisional Application (hereinafter "Notice"), mailed August 3, 2001. The Notice set a period for reply of two (2) months from the mail date of the Notice. Extensions of time were available under 37 CFR 1.136(a). No reply having been received, the application became abandoned on October 4, 2001. A Notice of Abandonment was mailed on November 7, 2003.

With the instant petition Petitioner has filed the necessary documents and paid the requisite fees.

The Oath/declaration has been entered and made of record.

This application is being forwarded to the Office of Initial Patent Examination for continued processing in due course.

Telephone inquiries concerning this matter should be directed to the undersigned at (571) 272-3232.

Derek L. Woods
Petitions Attorney
Office of Petitions

UNITED STATES PATENT AND TRADEMARK OFFICE

COMMISSIONER FOR PATENTS
UNITED STATES PATENT AND TRADEMARK OFFICE
WASHINGTON, D.C. 20231
www.uspto.gov

Paper No. 6

COPY MAILED

MAY 20 2002

OFFICE OF PETITIONS

ROBERT C. NABINGER
Fish & Richardson P.C.
225 Franklin Street
Boston, MA 02110-2804

In re Application of Buckle, et al. Application No. 09/878,748 Filed: June 11, 2001 Docket No. 8935-247001//M-4963 For: ANODE CANS FOR ELECTROCHEMICAL CELLS	DECISION REFUSING STATUS UNDER 37 CFR 1.47(a)

This is in response to the petition under 37 CFR 1.47(a), filed February 27, 2002 (Certificate of Mail date of February 8, 2002).

The petition is **DISMISSED**.

Rule 47 applicant is given TWO MONTHS from the mailing date of this decision to reply, correcting the below-noted deficiencies. Any reply should be entitled "Request for Reconsideration of Petition Under 37 CFR 1.47(a)," and should only address the deficiencies noted below, except that the reply may include an oath or declaration executed by the non-signing inventor. Failure to respond will result in abandonment of the application. Any extensions of time will be governed by 37 CFR 1.136(a).

The above-identified application was filed June 11, 2001 without an executed oath or declaration and naming Keith E. Buckle and Masaaki Ishio as joint inventors. Accordingly, on August 8, 2001, a Notice to File Missing Parts of Nonprovisional Application ("Notice") was mailed, requiring an executed oath or declaration and a surcharge for its late filing.

A grantable petition under 37 CFR 1.47(a) requires: (1) proof that the non-signing inventor cannot be reached or refuses to sign the oath or declaration after having been presented with the application papers (specification, claims and drawings); (2) an acceptable oath or declaration in compliance with 35 U.S.C. §§ 115 and 116; (3) the petition fee; and (4) a statement of the last known address of the non-signing inventor.

Petitioner lacks item (1) set forth above. Petitioner has failed to sufficiently establish that the non-signing inventor has refused to execute the declaration after having been presented with a copy of the application papers (specification, claims, and drawings).

The declaration of Christine P. Bellon indicates that on August 30, 2001, a cover letter and declaration/power of attorney were sent to the inventor at the inventor's last known address requesting that the inventor execute the declaration/power of attorney. The declaration further states that a reminder letter was sent to the inventor on September 21, 2001 and that in response, a letter on behalf of the inventor was received from M. Mitsuya, an assistant manager of sales section at Sumitomo

Application No. 09/878,748

Special Metals Co., Ltd., requesting that a copy of the patent application be forwarded to N. Nakajima at Sumitomo Corporation of America. Declarant states that a copy of the application was sent to N. Nakajima on October 4, 2001 and that despite numerous requests to representatives from Sumitomo, an executed declaration from the inventor has not been received.

Before a refusal can be alleged, it most be demonstrated that a *bona fide* effort has been made to present a copy of the application papers (specification, including claims, drawings, and oath or declaration) to the non-signing inventor. A copy of the application papers should be sent to the last known address of the non-signing inventor, or, if the non-signing inventor is represented by counsel, to the address of the non-signing inventor's attorney. *See*, MPEP 409.03(d).

Petitioner has not demonstrated that inventor ever received a copy of the application papers (specification, claims, and drawings). Nor has petitioner established that a refusal to execute the declaration was made on behalf of the inventor by the inventor's legal representative.

Any renewed petition should be accompanied by evidence to establish that the non-signing inventor, or the non-signing inventor's legal representative, was sent a copy of the application papers (specification, claims, and drawings) and thereafter refused to execute the declaration. Petitioner should include copies of letters sent to the inventor indicating the enclosure of the application papers (specification, claims, and drawings). If after the inventor received the application papers and requests to execute the declaration were refused, these facts should be set forth in a statement of facts signed by the person to whom the refusals were made and detailing with specificity the exact manner of the refusals. If a written refusal has been made, a copy of the written refusal should be included on renewed petition.

Further correspondence with respect to this matter should be addressed as follows:

By mail: Commissioner for Patents
Box DAC
Washington, D.C. 20231

By FAX: (703) 308-6916
Attn.: Office of Petitions

By hand: Crystal Plaza Four, Suite 3C23
2201 S. Clark Place
Arlington, VA

Telephone inquiries regarding this decision should be directed to Petitions Attorney Alesia M. Brown at (703) 305-0310.

Beverly M. Flanagan
Supervisory Petitions Examiner
Office of Petitions
Office of the Deputy Commissioner
for Patent Examination Policy

UNITED STATES PATENT AND TRADEMARK OFFICE

8935/247001

RCN
TXN

COMMISSIONER FOR PATENTS
UNITED STATES PATENT AND TRADEMARK OFFICE
WASHINGTON, D.C. 20231
www.uspto.gov

OIPE JC26
JUL 2 2 2002
PATENT & TRADEMARK OFFICE

RECEIVED
MAY 2 3 2002
FISH & RICHARDSON, P.C.
BOSTON OFFICE

Paper No. 6

COPY MAILED
MAY 2 0 2002
OFFICE OF PETITIONS

ROBERT C. NABINGER
Fish & Richardson P.C.
225 Franklin Street
Boston, MA 02110-2804

In re Application of
Buckle, et al.
Application No. 09/878,748
Filed: June 11, 2001
Docket No. 8935-247001//M-4963
For: ANODE CANS FOR
ELECTROCHEMICAL CELLS

DECISION REFUSING STATUS
UNDER 37 CFR 1.47(a)

Docketed By Practice Systems
Action Code: Req Reconsideration
Base Date: 5-20-02
Due Date: 7-20-02
Deadline: filed 7-20-02
Initial: JMG

This is in response to the petition under 37 CFR 1.47(a), filed February 27, 2002 (Certificate of Mail date of February 8, 2002).

The petition is **DISMISSED**.

Rule 47 applicant is given TWO MONTHS from the mailing date of this decision to reply, correcting the below-noted deficiencies. Any reply should be entitled "Request for Reconsideration of Petition Under 37 CFR 1.47(a)," and should only address the deficiencies noted below, except that the reply may include an oath or declaration executed by the non-signing inventor. Failure to respond will result in abandonment of the application. Any extensions of time will be governed by 37 CFR 1.136(a).

RECEIVED
JUL 2 3 2002
OFFICE OF PETITIONS

The above-identified application was filed June 11, 2001 without an executed oath or declaration and naming Keith E. Buckle and Masaaki Ishio as joint inventors. Accordingly, on August 8, 2001, a Notice to File Missing Parts of Nonprovisional Application ("Notice") was mailed, requiring an executed oath or declaration and a surcharge for its late filing.

A grantable petition under 37 CFR 1.47(a) requires: (1) proof that the non-signing inventor cannot be reached or refuses to sign the oath or declaration after having been presented with the application papers (specification, claims and drawings); (2) an acceptable oath or declaration in compliance with 35 U.S.C. §§ 115 and 116; (3) the petition fee; and (4) a statement of the last known address of the non-signing inventor.

Petitioner lacks item (1) set forth above. Petitioner has failed to sufficiently establish that the non-signing inventor has refused to execute the declaration after having been presented with a copy of the application papers (specification, claims, and drawings).

The declaration of Christine P. Bellon indicates that on August 30, 2001, a cover letter and declaration/power of attorney were sent to the inventor at the inventor's last known address requesting that the inventor execute the declaration/power of attorney. The declaration further states that a reminder letter was sent to the inventor on September 21, 2001 and that in response, a letter on behalf of the inventor was received from M. Mitsuya, an assistant manager of sales section at Sumitomo

Docketed By Silvia Hawkins
Date Entered: 7/23/02
Deadline: 7/23/02
Initials: SH

Application No. 09/878,748

Special Metals Co., Ltd., requesting that a copy of the patent application be forwarded to N. Nakajima at Sumitomo Corporation of America. Declarant states that a copy of the application was sent to N. Nakajima on October 4, 2001 and that despite numerous requests to representatives from Sumitomo, an executed declaration from the inventor has not been received.

Before a refusal can be alleged, it most be demonstrated that a *bona fide* effort has been made to present a copy of the application papers (specification, including claims, drawings, and oath or declaration) to the non-signing inventor. A copy of the application papers should be sent to the last known address of the non-signing inventor, or, if the non-signing inventor is represented by counsel, to the address of the non-signing inventor's attorney. *See*, MPEP 409.03(d).

Petitioner has not demonstrated that inventor ever received a copy of the application papers (specification, claims, and drawings). Nor has petitioner established that a refusal to execute the declaration was made on behalf of the inventor by the inventor's legal representative.

Any renewed petition should be accompanied by evidence to establish that the non-signing inventor, or the non-signing inventor's legal representative, was sent a copy of the application papers (specification, claims, and drawings) and thereafter refused to execute the declaration. Petitioner should include copies of letters sent to the inventor indicating the enclosure of the application papers (specification, claims, and drawings). If after the inventor received the application papers and requests to execute the declaration were refused, these facts should be set forth in a statement of facts signed by the person to whom the refusals were made and detailing with specificity the exact manner of the refusals. If a written refusal has been made, a copy of the written refusal should be included on renewed petition.

Further correspondence with respect to this matter should be addressed as follows:

By mail: Commissioner for Patents
Box DAC
Washington, D.C. 20231

By FAX: (703) 308-6916
Attn.: Office of Petitions

By hand: Crystal Plaza Four, Suite 3C23
2201 S. Clark Place
Arlington, VA

Telephone inquiries regarding this decision should be directed to Petitions Attorney Alesia M. Brown at (703) 305-0310.

Beverly M. Flanagan
Supervisory Petitions Examiner
Office of Petitions
Office of the Deputy Commissioner
for Patent Examination Policy

UNITED STATES PATENT AND TRADEMARK OFFICE

COMMISSIONER FOR PATENTS
UNITED STATES PATENT AND TRADEMARK OFFICE
WASHINGTON, D.C. 20231
www.uspto.gov

Paper No. 8

COPY MAILED

AUG 0 8 2002

OFFICE OF PETITIONS

ROBERT C. NABINGER
Fish & Richardson P.C.
225 Franklin Street
Boston, MA 02110-2804

In re Application of Buckle, et al. Application No. 09/878,748 Filed: June 11, 2001 Docket No. 8935-247001//M-4963 For: ANODE CANS FOR ELECTROCHEMICAL CELLS	DECISION GRANTING STATUS UNDER 37 CFR 1.47(a)

This is in response to the renewed petition under 37 CFR 1.47(a), filed July 22, 2002.

The petition is **GRANTED**.

Petitioner has shown that inventor Masaaki Ishio has refused to join in the filing of the above-identified application after having been presented with the application papers.

The above-identified application and papers have been reviewed and found in compliance with 37 CFR 1.47(a). This application is hereby accorded Rule 1.47(a) status.

As provided in Rule 1.47(c), this Office will forward notice of this application's filing to the non-signing inventor at the address given in the petition. Notice of the filing of this application will also be published in the Official Gazette.

After this decision is mailed, the above-identified application will be returned to the Office of Initial Patent Examination for further processing.

Telephone inquiries related to this decision may be directed to the undersigned at (703) 305-0310.

Alesia M. Brown
Petitions Attorney
Office of Petitions
Office of the Deputy Commissioner
for Patent Examination Policy

UNITED STATES PATENT AND TRADEMARK OFFICE

COMMISSIONER FOR PATENTS
UNITED STATES PATENT AND TRADEMARK OFFICE
WASHINGTON, D.C. 20231
www.uspto.gov

MASAAKI ISHIO
AIKAWA 2-24-29
HIGASHIYODOGAWA-KU
OSAKA 533-0007
JAPAN

COPY MAILED

AUG 0 8 2002

OFFICE OF PETITIONS

In re Application of :
Buckle, et al. :
Application No. 09/878,748 : LETTER
Filed: June 11, 2001 :
Docket No. 8935-247001//M-4963 :
For: ANODE CANS FOR ELECTROCHEMICAL:
CELLS :

Dear Sir:

You are named as a joint inventor in the above-identified United States patent application filed under the provisions of 35 U.S.C. 116 (United States Code) and 37 C.F.R. § 1.47(a), Rules of Practice in Patent Cases. Should a patent be granted on the application you will be designated therein as a joint inventor.

As a named inventor you are entitled to inspect any paper in the file wrapper of the application, order copies of all or any part thereof (at a prepaid cost as per 37 C.F.R. § 1.19) or make your position of record in the application. Alternatively, you may arrange to do any of the preceding through a registered patent attorney or agent presenting written authorization from you. If you care to join the application, counsel of record (see below) would presumably assist you. Joining in the application would entail the filing of an appropriate oath or declaration by you pursuant to 37 C.F.R. § 1.63.

Telephone inquiries regarding this communication should be directed to the undersigned at (703) 305-0310. Requests for information regarding your application should be directed to the File Information Unit at (703) 308-2733. Information regarding how to pay for and order a copy of the application, or a specific paper in the application, should be directed to Certification Division at (703) 308-9726 or 1-800-972-6382 (outside the Washington D.C. area).

Alesia M. Brown
Petitions Attorney
Office of Petitions
Office of the Deputy Commissioner
for Patent Examination Policy

CC: ROBERT C. NABINGER
FISH & RICHARDSON P.C.
225 FRANKLIN STREET
BOSTON, MA 02110-2804

UNITED STATES PATENT AND TRADEMARK OFFICE

Commissioner for Patents
United States Patent and Trademark Office
Washington, D.C. 20231
www.uspto.gov

Paper No. 6

Kenyon & Kenyon
One Broadway
New York, NY 10004

COPY MAILED
SEP 2 0 2002
OFFICE OF PETITIONS

In re Application of
J. Ritcher
Application No. 09/878,749
Filed: June 11, 2001
Attorney Docket No. 2390/50002

ON PETITION

This is a decision on the petition under 37 CFR 1.137(b), filed September 4, 2002, to revive the above-identified application.

The petition is **GRANTED**.

The above-identified application became abandoned for failure to reply in a timely manner to the Notice to File Missing Parts of Application (Notice) July 10, 2001. The Notice set a period for reply of two (2) months from the mail date of the Notice. No extensions of time under the provisions of 37 CFR 1.136(a) were obtained. Accordingly, the above-identified application became abandoned on September 11, 2001.

Telephone inquiries concerning this decision should be directed to Latrice Bond at (703) 308-6911.

The application file is being forwarded to Technology Center AU 3763 for further processing.

Latrice Bond
Paralegal Specialist
Office of Petitions
Office of the Deputy Commissioner
for Patent Examination Policy

UNITED STATES PATENT AND TRADEMARK OFFICE

Commissioner for Patents
United States Patent and Trademark Office
P.O. Box 1450
Alexandria, VA 22313-1450
www.uspto.gov

ECKERT SEAMANS CHERIN & MELLOTT, LLC
ALCOA TECHNICAL CENTER,
100 TECHNICAL CENTER DRIVE
ALCOA CENTER, PA 15069-0001

COPY MAILED
JUL 18 2008

In re Application of	:	
Igor GONDA, et al	:	
Application No. 09/878,772	:	DECISION ON PETITION
Filed: May 3, 2001	:	
Attorney Docket No. AERX055DIV4	:	

This is a decision on the petition under the unintentional provisions of 37 CFR 1.137(b), filed May 9, 2008, to revive the above-identified application.

The petition is **GRANTED**.

This application became abandoned as a result of petitioner's failure to take appropriate action in a timely manner after the decision of May 31, 2008 by the Board of Patent Appeals and Interferences. Therefore, the proceedings as to the rejected claims were terminated. *See* 37 CFR 1.197(b). As no claim was allowed, the application became abandoned on August 1, 2007. *See* MPEP 1214.06.

The petition satisfies the requirements of 37 CFR 1.137(b) in that petitioner has supplied (1) the reply in the form of a Request for Continued Examination (RCE) and fee of $810, and the submission required by 37 CFR 1.114; (2) the petition fee of $1540; and (3) the required statement of unintentional delay have been received.

Telephone inquiries concerning this decision should be directed to Diane Goodwyn at (571) 272-6735.

This application is being referred to Technology Center AU 1793 for appropriate action by the Examiner in the normal course of business on the reply received May 9, 2008.

Thurman K Page

Thurman Page
Petitions Examiner
Office of Petitions

PTO/SB/66 (03-09)
Approved for use through 03/31/2012. OMB 0651-0016
U.S. Patent and Trademark Office: U.S. DEPARTMENT OF COMMERCE
Under the Paperwork Reduction Act of 1995, no persons are required to respond to a collection of information unless it displays valid OMB control number.

PETITION TO ACCEPT UNINTENTIONALLY DELAYED PAYMENT OF MAINTENANCE FEE IN AN EXPIRED PATENT (37 CFR 1.378(c))

Patent Number	Issue Date (YYYY-MM-DD)	Application Number	Filing Date (YYYY-MM-DD)	Docket Number (if applicable)
6866855	2005-03-15	09878781	2001-06-11	MER 9004-055.55

CAUTION: Maintenance fee (and surcharge, if any) payment must correctly identify: (1) the patent number and (2) the application number of the actual U.S. application leading to issuance of that patent to ensure the fee(s) is/are associated with the correct patent. 37 CFR 1.366(c) and (d).

SMALL ENTITY
☒ Patentee claims, or has previously claimed, small entity status. See 37 CFR 1.27.

LOSS OF ENTITLEMENT TO SMALL ENTITY STATUS
☐ Patentee is no longer entitled to small entity status. See 37 CFR 1.27(g)

NOT Small Entity		Small Entity	
Fee	Code	Fee	Code
○ 3 ½ year	(1551)	◉ 3 ½ year	(2551)
○ 7 ½ year	(1552)	○ 7 ½ year	(2552)
○ 11 ½ year	(1553)	○ 11 ½ year	(2553)

SURCHARGE
The surcharge required by 37 CFR 1.20(i)(2) (Fee Code 1558) must be paid as a condition of accepting unintentionally delayed payment of the maintenance fee.

MAINTENANCE FEE (37 CFR 1.20(e)-(g))
The appropriate maintenance fee must be submitted with this petition.

STATEMENT
THE UNDERSIGNED CERTIFIES THAT THE DELAY IN PAYMENT OF THE MAINTENANCE FEE TO THIS PATENT WAS UNINTENTIONAL

PETITIONER(S) REQUEST THAT THE DELAYED PAYMENT OF THE MAINTENANCE FEE BE ACCEPTED AND THE PATENT REINSTATED

THIS PORTION MUST BE COMPLETED BY THE SIGNATORY OR SIGNATORIES

37 CFR 1.378(d) states: "Any petition under this section must be signed by an attorney or agent registered to practice before the Patent and Trademark Office, or by the patentee, the assignee, or other party in interest."

I certify, in accordance with 37 CFR 1.4(d)(4) that I am

◉ An attorney or agent registered to practice before the Patent and Trademark Office

○ A sole patentee

○ A joint patentee; I certify that I am authorized to sign this submission on behalf of all the other patentees.

○ A joint patentee; all of whom are signing this e-petition

○ The assignee of record of the entire interest

Patent Practitioner			
A signature of the applicant or representative is required in accordance with 37 CFR 1.33 and 10.18. Please see 37 CFR 1.4(d) for the form of the signature			
Signature	/Judy Jarecki-Black/	Date (YYYY-MM-DD)	2009-05-07
Name	Judy Jarecki-Black,Ph.D.,J.D.	Registration Number	44170

This collection of information is required by 37 CFR 1.378(c). The information is required to obtain or retain a benefit by the public which is to file (and by the USPTO to process) an application. Confidentiality is governed by 35 U.S.C. 122 and 37 CFR 1.11 and 1.14. This collection is estimated to take 1 hour to complete, including gathering, preparing, and submitting the completed application form to the USPTO. Time will vary depending upon the individual case. Any comments on the amount of time you require to complete this form and/ or suggestions for reducing this burden, should be sent to the Chief Information Officer, U.S. Patent and Trademark Office, U.S. Department of Commerce, P.O. Box 1450, Alexandria, VA 22313-1450. DO NOT SEND FEES OR COMPLETED FORMS TO THIS ADDRESS. **This form can only be used when in conjunction with EFS-Web. If this form is mailed to the USPTO, it may cause delays in reinstating the patent.**

Privacy Act Statement

The Privacy Act of 1974 (P.L. 93-579) requires that you be given certain information in connection with your submission of the attached form related to a patent application or patent. Accordingly, pursuant to the requirements of the Act, please be advised that: (1) the general authority for the collection of this information is 35 U.S.C. 2(b)(2); (2) furnishing of the information solicited is voluntary; and (3) the principal purpose for which the information is used by the U.S. Patent and Trademark Office is to process and/or examine your submission related to a patent application or patent. If you do not furnish the requested information, the U.S. Patent and Trademark Office may not be able to process and/or examine your submission, which may result in termination of proceedings or abandonment of the application or expiration of the patent.

The information provided by you in this form will be subject to the following routine uses:

1. The information on this form will be treated confidentially to the extent allowed under the Freedom of Information Act (5 U.S.C. 552) and the Privacy Act (5 U.S.C. 552a). Records from this system of records may be disclosed to the Department of Justice to determine whether the Freedom of Information Act requires disclosure of these records.

2. A record from this system of records may be disclosed, as a routine use, in the course of presenting evidence to a court, magistrate, or administrative tribunal, including disclosures to opposing counsel in the course of settlement negotiations.

3. A record in this system of records may be disclosed, as a routine use, to a Member of Congress submitting a request involving an individual, to whom the record pertains, when the individual has requested assistance from the Member with respect to the subject matter of the record.

4. A record in this system of records may be disclosed, as a routine use, to a contractor of the Agency having need for the information in order to perform a contract. Recipients of information shall be required to comply with the requirements of the Privacy Act of 1974, as amended, pursuant to 5 U.S.C. 552a(m).

5. A record related to an International Application filed under the Patent Cooperation Treaty in this system of records may be disclosed, as a routine use, to the International Bureau of the World Intellectual Property Organization, pursuant to the Patent Cooperation Treaty.

6. A record in this system of records may be disclosed, as a routine use, to another federal agency for purposes of National Security review (35 U.S.C. 181) and for review pursuant to the Atomic Energy Act (42 U.S.C. 218(c)).

7. A record from this system of records may be disclosed, as a routine use, to the Administrator, General Services, or his/her designee, during an inspection of records conducted by GSA as part of that agency's responsibility to recommend improvements in records management practices and programs, under authority of 44 U.S.C. 2904 and 2906. Such disclosure shall be made in accordance with the GSA regulations governing inspection of records for this purpose, and any other relevant (i.e., GSA or Commerce) directive. Such disclosure shall not be used to make determinations about individuals.

8. A record from this system of records may be disclosed, as a routine use, to the public after either publication of the application pursuant to 35 U.S.C. 122(b) or issuance of a patent pursuant to 35 U.S.C. 151. Further, a record may be disclosed, subject to the limitations of 37 CFR 1.14, as a routine use, to the public if the record was filed in an application which became abandoned or in which the proceedings were terminated and which application is referenced by either a published application, an application open to public inspections or an issued patent.

9. A record from this system of records may be disclosed, as a routine use, to a Federal, State, or local law enforcement agency, if the USPTO becomes aware of a violation or potential violation of law or regulation.

UNITED STATES PATENT AND TRADEMARK OFFICE

Commissioner for Patents
United States Patent and Trademark Office
P.O. Box 1450
Alexandria, VA 22313-1450
www.uspto.gov

In re Patent No. 6866855
Issue Date: March 15,2005
Application No. 09878781
Filed: June 11,2001
Attorney Docket No. 9000-0055

:
:DECISION GRANTING PETITION
:UNDER 37 CFR 1.378(c)
:

This is a decision on the electronic petition, filed May 7,2009 ,under 37 CFR 1.378(c) to accept the unintentionally delayed payment of the 3.5 year maintenance fee for the above-identified patent.

The petition is **GRANTED**.

The maintenance fee is accepted, and the above-identified patent reinstated as of May 7,2009 .
This decision also constitutes notice that the fee has been accepted. An electronic copy of the petition and this decision has been created as an entry in the Image File Wrapper. Nevertheless, petitioner should print and retain an independent copy.

Telephone inquiries related to this electronic decision should be directed to the Electronic Business Center at 1-866-217-9197.

UNITED STATES PATENT AND TRADEMARK OFFICE

COMMISSIONER FOR PATENTS
UNITED STATES PATENT AND TRADEMARK OFFICE
WASHINGTON, D.C. 20231
www.uspto.gov

GEORGE S. COLE
495 SEAPORT COURT, SUITE 101
REDWOOD CITY, CA 94063

COPY MAILED

JUN 1 6 2003

OFFICE OF PETITIONS

In re Application of :
Agee, et al. :
Application No. 09/878,789 : ON PETITION
Filed: June 10, 2001 :
Title: METHOD AND APPARATUS FOR :
OPTIMIZATION OF WIRELESS
MULTIPOINT ELECTROMAGNETIC
COMMUNICATION NETWORKS

In re Application of
Agee, et al.
Application No. 09/879,459
Filed: June 11, 2001
Title: METHOD AND APPARATUS FOR
OPTIMIZATION OF WIRELESS
MULTIPOINT ELECTROMAGNETIC
COMMUNICATION NETWORKS

This is a decision on the papers styled, Petition to Revive and Treat as Amendment, filed October 8, 2002, which have been treated as a petition under 37 CFR 1.137(b), to revive the above-identified application, and a petition under 37 CFR 1.182, to merge the above-identified application files.

Application No. 09/878,789 was deposited on June 10, 2001. However, Petitioner states, "the need for a number of corrections was realized as the Attorney realized (the next morning) that a draft version of the specification had been sent." To correct applicants filing error, on June 11, 2001, applicants filed the full version of the specification "with indication that it was a correction for the previous day's filing. Attorney presumed that the Patent Office would treat this as a Preliminary Amendment under

608.04(b)." The papers were accompanied by a cover letter directed to the application filed on June 10, 2001, but no application number was identified in the cover letter.[1] As a result of a Patent and Trademark Office (Office) error, the papers filed June 11, 2001, were processed as a new application and were assigned application No. 08/879,459 and a filing date of June 11, 2001.

A "Notice To File Missing Parts of Nonprovisional Application" was mailed in application No. 09/878,789 on August 13, 2001, requiring the basic filing fee, additional claim fees of $769, the surcharge set forth in 37 CFR 1.16(e), a substitute specification in compliance with 37 CFR 1.52 and an abstract.

A "Notice To File Corrected Application Papers" was mailed in application No. 09/879,459 on August 20, 2001, requiring an abstract and Figures 1-5, 6A & 6B, 7A & 7B, 8-12, 13A & 13B, 14-37, 38A & 38B, 39-40 described in the specification.

In response, on October 8, 2002, titled for both applications, applicant filed a clean copy of the substitute specification, authorization to charge all necessary fees, and a duplicate set of drawings. Furthermore, on October 8, 2002, petitioner filed the instant "Petition for Revival of an Application Abandoned Unintentionally Under 37 CFR 1.137(b)" and also petitions for the Office's error be corrected by merging the file of application No. 09/879,459 into the file of application No. 09/878,789.

The petitions are GRANTED.

Application No. 09/878,789 became abandoned for failure to reply in a timely manner to the Notice to File Missing Parts of Application (Notice) mailed August 13, 2001. The Notice set a period for reply of two (2) months from the mail date of the Notice. No extensions of time under the provisions of 37 CFR 1.136(a) were obtained. Accordingly, the above-identified application became abandoned on October 14, 2001.

---

[1] A cover letter attached to the submission on June 11, 2001 states, "On June 10, 2001 I sent by Express Mail a less-completed version with 40 of the original 41 drawings, and have not obtained copies of them to send with this. I ask that the two documents be merged into a single application rather than become two independent applications."

Both applications will be returned to the Office of Initial Patent Examination for merging the file of application No. 09/879,459 into the file of application No. 09/878,789. The papers submitted on June 11, 2001 which became application No. 09/879,4598, shall be treated as a preliminary amendment. Thereafter, application No. 09/879,459 will no longer be an active serial number. As such, the "Notice To File Corrected Application Papers" mailed in application No. 08/879,459, on August 20, 2001, is moot.

The $355.00 filing fee, $120.00 claims in excess of 20 fee and $1467.00 multiple dependent claims fee (total of $1942.00) charged for 09/879,459 will be refunded to deposit account no. 50-0705.

All future correspondence concerning this application should be directed to application No. 09/878,789.

Telephone inquiries concerning this matter may be directed to the undersigned at (703) 306-9200.

Edward J. Tannouse
Senior Petitions Attorney
Office of Petitions
United States Patent and Trademark Office

UNITED STATES PATENT AND TRADEMARK OFFICE

COMMISSIONER FOR PATENTS
UNITED STATES PATENT AND TRADEMARK OFFICE
WASHINGTON, D.C. 20231
www.uspto.gov

GEORGE S. COLE
495 SEAPORT COURT, SUITE 101
REDWOOD CITY, CA 94063

COPY MAILED
JUN 1 6 2003
OFFICE OF PETITIONS

In re Application of
Agee, et al.
Application No. 09/878,789 Per Liedtel
Filed: June 10, 2001
Title: METHOD AND APPARATUS FOR OPTIMIZATION OF WIRELESS MULTIPOINT ELECTROMAGNETIC COMMUNICATION NETWORKS

ON PETITION

In re Application of
Agee, et al.
Application No. 09/879,459 → Duplicate application have to be killed.
Filed: June 11, 2001
Title: METHOD AND APPARATUS FOR OPTIMIZATION OF WIRELESS MULTIPOINT ELECTROMAGNETIC COMMUNICATION NETWORKS

all Documents belongs to 09/878,789, as amend.

This is a decision on the papers styled, Petition to Revive and Treat as Amendment, filed October 8, 2002, which have been treated as a petition under 37 CFR 1.137(b), to revive the above-identified application, and a petition under 37 CFR 1.182, to merge the above-identified application files.

Application No. 09/878,789 was deposited on June 10, 2001. However, Petitioner states, "the need for a number of corrections was realized as the Attorney realized (the next morning) that a draft version of the specification had been sent." To correct applicants filing error, on June 11, 2001, applicants filed the full version of the specification "with indication that it was a correction for the previous day's filing. Attorney presumed that the Patent Office would treat this as a Preliminary Amendment under

Both applications will be returned to the Office of Initial Patent Examination for merging the file of application No. 09/879,459 into the file of application No. 09/878,789. The papers submitted on June 11, 2001 which became application No. 09/879,4598, shall be treated as a preliminary amendment. Thereafter, application No. 09/879,459 will no longer be an active serial number. As such, the "Notice To File Corrected Application Papers" mailed in application No. 08/879,459, on August 20, 2001, is moot.

The $355.00 filing fee, $120.00 claims in excess of 20 fee and $1467.00 multiple dependent claims fee (total of $1942.00) charged for 09/879,459 will be refunded to deposit account no. 50-0705.

All future correspondence concerning this application should be directed to application No. 09/878,789.

Telephone inquiries concerning this matter may be directed to the undersigned at (703) 306-9200.

Edward J. Tannouse
Senior Petitions Attorney
Office of Petitions
United States Patent and Trademark Office

UNITED STATES PATENT AND TRADEMARK OFFICE

COMMISSIONER FOR PATENTS
UNITED STATES PATENT AND TRADEMARK OFFICE
P.O. BOX 1450
ALEXANDRIA, VA 22313-1450
www.uspto.gov

JJGJR.: 02-05

Paper No: __

COPY MAILED
FEB 14 2005
OFFICE OF PETITIONS

PHILIP S. JOHNSON
JOHNSON & JOHNSON
ONE JOHNSON & JOHNSON PLAZA
NEW BRUNSWICK NJ 08933-7003

In re Application of
Boeke :
Application No. 09/878,806 :
Filing Date: 11 June, 2001
Attorney Docket No. J&J 2025 :

This is a decision on the petition filed on 21 January, 2005, alleging unintentional delay under 37 C.F.R. §1.137(b).

The petition under 37 C.F.R. §1.137(b) is **GRANTED**.

BACKGROUND

The record reflects that:

- Petitioner failed to reply timely and properly to the final Office action mailed on 21 May, 2004, with reply due under absent extension of time on or before Monday, 23 August, 2004;
- the application went abandoned after midnight 21 August, 2004;
- the Office mailed a Notice of Abandonment on 30 December, 2004;
- Petitioner filed with the petition and fee an after-final amendment, which was not a

proper reply,[1] because it did not *prima facie* place the application in condition for allowance and which the Examiner has refused to enter;

- as a supplement, Petitioner filed via FAX on 11 February, 2005, the reply in the form of a request for continued examination (RCE),[2] fee (charged, as authorized, to Deposit Account 10-0750), and submission in the form of the after-final amendment, and made the statement of unintentional delay.

STATUTES, REGULATIONS AND ANALYSIS

Congress has authorized the Commissioner to revive an application if the delay is shown to the satisfaction of the Commissioner to have been "unavoidable." 35 U.S.C. §133 (1994).[3]

The regulations at 37 C.F.R. §1.137(a) and (b) set forth the requirements for a petitioner to revive a previously unavoidably or unintentionally, respectively, abandoned application under this congressional grant of authority. The language of 35 U.S.C. §133 and 37 C.F.R. §1.137(a) is clear, unambiguous, and without qualification: the delay in tendering the reply to the outstanding Office action, as well as filing the first petition seeking revival, must have been unavoidable for the reply now to be accepted on petition.[4]

Delays in responding properly raise the question whether delays are unavoidable.[5] Where there is a question whether the delay was unavoidable, Petitioners must meet the burden of establishing that the delay was unavoidable within the meaning of 35 U.S.C. §133 and 37 C.F.R. §1.137(a).[6]

---

[1] The proper response to the final Office action (see: MPEP 711.03(c)) must be in the form of: (a) an amendment *prima facie* placing the application in condition for allowance; (b) a Notice of Appeal; or (c) a Continuing Application or Request for Continued Examination (RCE) (with fee and submission) under 37 C.F.R. §1.114.

[2] Notably, the Petitioner has submitted the material with an incorrect application number (10/117,545) on the transmittal, however, the RCE form does contain the serial number of the instant application (09/878,806).

[3] 35 U.S.C. §133 provides:
35 U.S.C. §133 Time for prosecuting application.
Upon failure of the applicant to prosecute the application within six months after any action therein, of which notice has been given or mailed to the applicant, or within such shorter time, not less than thirty days, as fixed by the Commissioner in such action, the application shall be regarded as abandoned by the parties thereto, unless it be shown to the satisfaction of the Commissioner that such delay was unavoidable.

[4] Therefore, by example, an unavoidable delay in the payment of the Filing Fee might occur if a reply is shipped by the US Postal Service, but due to catastrophic accident, the delivery is not made.

[5] See: *Changes to Patent Practice and Procedure*; *Final Rule Notice*, 62 *Fed. Reg.* at 53158-59 (October 10, 1997), 1203 *Off. Gaz. Pat. Office* at 86-87 (October 21, 1997).

[6] See: In re Application of G, 11 USPQ2d 1378, 1380 (Comm'r Pats. 1989).

And the Petitioner must be diligent in attending to the matter.[7] Failure to do so does not constitute the care required under Pratt, and so cannot satisfy the test for diligence and due care.

(By contrast, unintentional delays are those that do not satisfy the very strict statutory and regulatory requirements of unavoidable delay, and also, by definition, are not intentional.[8]))

The requirements for a grantable petition under 37 C.F.R. §1.137(b) are the petition and fee, the statement of unintentional delay, a proper reply, and–where appropriate--a terminal disclaimer and fee if the application was filed before 8 June, 1995.

Petitioner now has satisfied the requirements of the regulation.

CONCLUSION

The petition under 37 C.F.R. §1.137(b) is **granted**.

The instant file is released to Technology Center 3600 for further processing in due course.

Telephone inquiries concerning this decision may be directed to the undersigned at (571) 272-3214.

John J. Gillon, Jr.
Senior Attorney
Office of Petitions

---

[7] See: Diligence in Filing Petitions to Revive and Petitions to Withdraw the Holding of Abandonment, 1124 Off. Gaz. Pat. Office 33 (March 19, 1991). It was and is Petitioner's burden to exercise diligence in seeking either to have the holding of abandonment withdrawn or the application revived. See 1124 Off. Gaz. Pat. Office supra.

[8] Therefore, by example, an unintentional delay in the reply might occur if the reply and transmittal form are to be prepared for shipment by the US Postal Service, but other pressing matters distract one's attention and the mail is not timely deposited for shipment.

UNITED STATES PATENT AND TRADEMARK OFFICE

Commissioner for Patents
United States Patent and Trademark Office
P.O. Box 1450
Alexandria, VA 22313-1450
www.uspto.gov

FARJAMI & FARJAMI LLP
26522 LA ALAMEDA AVENUE, SUITE 360
MISSION VIEJO CA 92691

COPY MAILED

AUG 2 7 2004

OFFICE OF PETITIONS

ON PETITION

In re Application of :
Hashemi, et al. :
Application No. 09/878,815 :
Filed: June 11, 2001 :
Attorney Docket No. 00CON159PC-CIP1 :
For: STRUCTURE AND METHOD FOR FABRICATION OF A LEADLESS CHIP CARRIER

This is a decision on the petition under 37 CFR 1.137(a) and in the alternative, under 37 CFR 1.137(b), to revive the above-identified application. The petitions were filed in the same paper on May 10, 2004 (certificate of mailing date May 4, 2004).

The petition under 37 CFR 1.137(a) is **DISMISSED**.

The petition under 37 CFR 1.137(b) is **GRANTED**.

The above-identified application became abandoned for failure to properly reply to the final Office action, mailed September 17, 2003. Petitioners filed an amendment after final on December 17, 2003. The amendment was not matched with the file. Petitioners submitted a copy of the amendment on March 12, 2004. The amendment after final failed to place the above-identified application in *prima facie* condition for allowance, as stated in the April 1, 2004 Advisory Action. The application became abandoned on December 18, 2003. A Notice of Abandonment was mailed on April 7, 2004.

A grantable petition to revive an abandoned application under 37 CFR 1.137(a) must be accompanied by (1) the required reply, unless previously filed. In a nonprovisional application abandoned for failure to prosecute, the required reply may be met by the filing of a continuing application. In an application or patent, abandoned or lapsed for failure to pay the issue fee or any portion thereof, the required reply must be the payment of the issue fee or any outstanding balance thereof; (2) the petition fee as set forth in § 1.17(l); (3) a showing to the satisfaction of the Commissioner that the entire delay in filing the required reply from the due date for the reply until the filing of a grantable petition pursuant to this paragraph was unavoidable; and (4) any terminal disclaimer (and fee as set forth in § 1.20 (d)) required pursuant to paragraph (c) of this

section. This petition does not satisfy requirement (3).

Regarding (3), the showing of record is inadequate to establish unavoidable delay within the meaning of 37 CFR 1.137(a). Specifically, an application is "unavoidably" abandoned only where petitioner, or counsel for petitioner, takes all action necessary for a proper response to the outstanding Office action, but through the intervention of unforeseen circumstances, such as failure of mail, telegraph, telefacsimile, or the negligence of otherwise reliable employees, the response is not timely received in the Office. Ex parte Pratt, 1887 Dec. Comm'r Pat. 31 (Comm'r Pat. 1887).

The Commissioner may revive an abandoned application if the delay in responding to the relevant outstanding Office requirement is shown to the satisfaction of the Commissioner to have been "unavoidable". 35 USC § 133. Decisions on reviving abandoned applications have adopted the reasonably prudent person standard in determining if the delay was unavoidable. Ex parte Pratt, 1887 Dec. Comm'r Pat. 31, 32-33 (Comm'r Pat. 1887)(the term 'unavoidable' "is applicable to ordinary human affairs, and requires no more or greater care or diligence than is generally used and observed by prudent and careful men in relation to their most important business"); In re Mattullath, 38 App. D.C. 497, 514-15 (D.C. Cir. 1912); Ex parte Henrich, 1913 Dec. Comm'r Pat. 139, 141 (Comm'r Pat. 1913). In addition, decisions on revival are made on a "case-by-case basis, taking all the facts and circumstances into account." Smith v. Mossinghoff, 671 F.2d 533, 538, 213 USPQ 977, 982 (D.C. Cir. 1982). Finally, a petition to revive an application as unavoidably abandoned cannot be granted where a petitioner has failed to meet his or her burden of establishing the cause of the unavoidable delay. Haines v. Quigg, 673 F. Supp. 314, 5 USPQ2d 1130 (N.D. Ind. 1987).

In the instant case, petitioners have failed to provide adequate evidence that the delay was unavoidable.

Petitioners are reminded that after a final action, there are only five possible replies: (1) a Notice of Appeal, (2) the filing of a continuing application, (3) a 37 CFR 1.129(a) submission, if appropriate, (4) an amendment after final that makes the case ready for issuance or (4) a RCE. To be a proper reply, an amendment after final must eliminate all of the Examiner's objections and rejections, and thus place the case in *prima facie* condition for allowance.

Petitioners' amendment after final failed to eliminate all of the Examiner's objections and rejections. The rules of practice are clear that prosecution of an application to save it from abandonment must include such complete and proper action as the condition of the case may require. The admission of an amendment not responsive to the last Office action, or refusal to admit the same, shall not operate to save the application from abandonment. "[T]he admission of, or refusal to admit, any amendment after final rejection, and any proceedings relative thereto, shall not operate to relieve the application or patent under reexamination from its condition as subject to appeal or to save the application from abandonment under § 1.135." See 37 CFR 1.116(a).

Petitioners' failure to appreciate that the filing of a proposed amendment under 37 CFR 1.116 on December 17, 2003 did not relieve petitioner of the burden of timely filing a notice of appeal or other proper response to avoid abandonment of the above-identified application is unfortunate, but it is not unavoidable delay. The abandonment of an application subject to a final Office action is not "unavoidable" within the meaning of 35 USC 133 and 37 CFR 1.137(a) in the situation in which the applicant simply permits the maximum extendable statutory period for reply to a final Office action to expire while awaiting a notice of allowance or other action. See Changes to Patent Practice and Procedure; Final Rule Notice, 62 Fed. Reg. At 53162, 1203 Off. Gaz. Pat. Office at 89 (response to comment 66).

Petitioners are reminded that an Advisory Action does not start a new period for response.. The application became abandoned because petitioner did not submit a proper reply to the final Office action.

The petition under 37 CFR 1.137(a) is **DISMISSED**.

Petitioners have submitted a proper reply in the form of an RCE and amendment, an acceptable statement of the unintentional nature of the delay in responding to the September 17, 2003 final Office action, and authorization to charge the petition fee to petitioners' deposit account. Deposit account no. 50-0731 will be charged $1,330.00.

The petition under 37 CFR 1.137(b) is **GRANTED**.

After the mailing of this decision the application will be forwarded to Technology Center 2800's technical support staff for entry of the amendment filed May 10, 2004 (certificate of mailing date May 4, 2004) and for further examination.

Telephone inquiries pertaining to this decision may be directed to the undersigned at (703) 308-6712.

E. Shirene Willis

E. Shirene Willis
Senior Petitions Attorney
Office of Petitions

SPE RESPONSE FOR CERTIFICATE OF CORRECTION

Paper No.: 20051213

DATE : 12/2/05

TO SPE OF : ART UNIT 2193

SUBJECT : Request for Certificate of Correction on Patent No.: 6952710

A response is requested with respect to the accompanying request for a certificate of correction.

Please complete this form and return with file, within 7 days to:
Palm location **7580, Certificates of Correction Branch – South Tower – 9A22**
If response is for an IFW, **return to employee (named below) via PUBSCofC Team in MADRAS.**
With respect to the change(s) requested, correcting Office and/or Applicant's errors, should the patent read as shown in the certificate of correction (COCIN)? No new matter should be introduced, nor should the scope or meaning of the claims be changed.

Valerie Jackson

Thank You For Your Assistance

Certificates of Correction Branch
Tel. No. 703-308-9390 ext. 114

The request for issuing the above-identified correction(s) is hereby:
Note your decision on the appropriate box.

- ☒ **Approved** — All changes apply.
- ☐ **Approved in Part** — Specify below which changes **do not** apply.
- ☐ **Denied** — State the reasons for denial below.

Comments:

There is no terminal disclaimer in the application

KAKALI CHAKI
SUPERVISORY PATENT EXAMINER
TECHNOLOGY CENTER 2100

Kakali Chaki
SPE

2193
Art Unit

Staple Here Only!

PRINTER'S TRIM LINE

Approved to enter
CW
12/13/2005

UNITED STATES PATENT AND TRADEMARK OFFICE
CERTIFICATE OF CORRECTION

PATENT NO. : 6,952,710 B2

DATED : October 4, 2005

INVENTOR(S) : Pelton et al.

It is certified that error appears in the above-identified patent and that said Letters Patent is hereby corrected as shown below:

Title page,

Cancel "This patent is subject to a terminal disclaimer."

MAILING ADDRESS OF SENDER:

ALSTON & BIRD LLP
Bank of America Plaza
101 South Tryon Street, Suite 4000
Charlotte, NC 28280-4000
Tel Charlotte Office (704) 444-1000

PATENT NO. 6,952,710 B2

No. of add'l. copies @ 30¢ per page

FORM PTO 1050 (REV. 3-82)

NOV 18 2005

UNITED STATES PATENT AND TRADEMARK OFFICE

COMMISSIONER FOR PATENTS
UNITED STATES PATENT AND TRADEMARK OFFICE
P.O. BOX 1450
ALEXANDRIA, VA 22313-1450
www.uspto.gov

Paper No. __

BANNER & WITCOFF
1001 G STREET N W
SUITE 1100
WASHINGTON DC 20001

COPY MAILED
JUL 1 6 2004
OFFICE OF PETITIONS

In re Application of	:	
Mockry, et al.	:	
Application No.09/878,860	:	ON PETITION
Filed: 10 May, 2002	:	
Attorney Docket No. 006385.00001	:	

This is a decision on a petition (styled: "Petition for Delayed Issuance of Patent) filed on 24 May, 2004, and considered under 37 C.F.R. §1.314.

The petition is **DISMISSED as moot**.

BACKGROUND

Then-*pro se* applicants George Mockery and co-inventor Greg M. Mockery (hereinafter Messrs. George and Greg Mockery or Applicants) deposited this application on 9 June, 2001.

At the outset, the application failed to receive a filing date of 9 June, 2001, but thereafter received a later date and was examined before being allowed on 24 February, 2004.

Meanwhile, several petitions to obtain a 9 June, 2001, filing date were filed and dismissed in the effort to obtain a filing date for the application. As to the petition filed on 12 March, 2004, the grant of a filing date was directed to be and was so granted on 7 June, 2004.

The instant petition was filed in the interim, and sought to delay issue until the 12 March, 2004, petition was decided.

Clearly, that event has occurred.

The issue is moot, and the petition is **dismissed**.

The application is released to Publications Branch to be processed into a patent.

Telephone inquiries concerning this decision may be directed to the Office of Petitions at (703)305-9282.

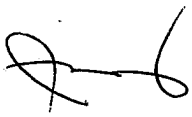

John J. Gillon, Jr.
Senior Attorney
Office of Petitions

UNITED STATES PATENT AND TRADEMARK OFFICE

Commissioner for Patents
United States Patent and Trademark Office
Washington, D.C. 20231
www.uspto.gov

Paper No. 6

COPY MAILED

AUG 1 4 2002

OFFICE OF PETITIONS

BERNHARD P MOLLDREM JR
333 EAST ONONDAGE STREET
SYRACUSE, NY 13202

In re Application of	:	
Mockry et al.	:	
Application No. 09/878,860	:	DECISION ON PETITION
Filed: May 10, 2002	:	
Attorney Docket Number:	:	
530.005PA	:	

This is a decision on the petition filed May 10, 2002, requesting that the above-identified application be accorded a filing date of June 9, 2001. The petition avers that the return-receipt postcard evinces receipt of the application papers. Accordingly, the petition will be decided under 37 CFR 1.53.

The petition is dismissed.

Background

The application was deposited on June 9, 2001. However, on March 15, 2001, the Office of Initial Patent Examination (OIPE) mailed a Notice of Incomplete Nonprovisional Application (hereinafter "Notice"), stating that a filing date had not been accorded the application because the specification did not include a written description of the invention.

In response, Petitioner files the instant petition, along with a copy of the postcard receipt filed with the instant application, and a specification containing pages 1 and 2. Petitioner avers that the postcard acknowledges receipt of the complete specification.

The instant petition

The best evidence of what was filed on June 9, 2001, is applicant's postcard receipt. Unfortunately, Petitioner's postcard receipt does not identify the number of pages filed in the specification, but only notes that "4 original copies of provisional" were filed. Thus, applicant's postcard receipt fails to demonstrate that a written description of the invention was present upon filing the instant application. The MPEP provides that

> [t]he postcard receipt will not serve as prima facie evidence of receipt of any item which is not adequately itemized on the postcard. For example, merely listing on the postcard 'a complete application' or 'patent application' will not serve as a proper receipt for each of the required components of an application

> (e.g., specification (including claims), drawings (if necessary), oath or declaration and the application filing fee[] or missing portions (e.g., pages, sheets of drawings) of an application if one of the components or portions of a component is found to be missing by the USPTO. Each separate component should be specifically and properly itemized on the postcard.

MPEP § 503

Conclusion

If a written description of the invention (pages 1 and 2 of the specification) was not present on the June 9, 2001 filing date, it cannot be considered a part of the original disclosure of the application. Petitioner has failed to satisfactorily demonstrate that a written description of the invention was present in the Office on June 9, 2001. Therefore, the application cannot be accorded the June 9, 2001 filing date with a written description of the invention, as a part of the original disclosure. The issue of new matter is one appropriately addressed by the primary examiner during prosecution of the application after the filing date of the application has been determined.

Accordingly, the filing date of the application is the date that the omitted pages were submitted, May 10, 2002.

The application is being returned to OIPE for further processing with a filing date of May 10, 2002, using the pages of specification filed on that date.

Telephone inquiries concerning this matter should be directed to Petitions Attorney Derek L. Woods at (703) 305-0014.

Christina Tartera Donnell for

Beverly M. Flanagan, Esq.
Supervisory Petitions Examiner
Office of Petitions
Office of the Deputy Commissioner
for Patent Examination Policy

Conferee: Christina Donnell, Esq.

UNITED STATES PATENT AND TRADEMARK OFFICE

COMMISSIONER FOR PATENT
UNITED STATES PATENT AND TRADEMARK OFFIC
WASHINGTON, D.C. 20231
www.uspto.go

JJGJr. 11-02

Paper No. 9

BERNHARD P MOLLDREM JR
333 EAST ONONDAGE STREET
SYRACUSE NY 13202

COPY MAILED

NOV 1 8 2002

OFFICE OF PETITIONS

In re Application of	:	
Mockry, et al.	:	
Application No.09/878,860	:	ON PETITION
Filed: 10 May, 2002	:	
Attorney Docket No. 530.005PA	:	

This is a decision on the renewed petition filed on 7 October, 2002, as a "Petition to Reconsider Refusal to Grant Filing Date," and thus treated as a petition under 37 C.F.R. §1.53 requesting that the application obtain a filing date of 9 June, 2001, and also treated under 37 C.F.R. §1.10, in light of the reference to a return receipt card under the regulation.

For the reasons set forth below, the petition under:

- 37 C.F.R. §1.53 is **DISMISSED**; and
- 37 C.F.R. §1.10 is **DISMISSED**.

This application was deposited on 9 June, 2001. However, on 15 March, 2002, the Office mailed a "Notice of Incomplete Nonprovisional Application" and indicated that no filing date was granted for the application because "the specification does not include a written description of the invention"

Petitioner responded with a petition on 10 May, 2002, which was dismissed on 14 August, 2002.

Petitioner then filed the instant petition on 7 October, 2002, contending that:

- Petitioner's date-stamped (9 June, 2001), receipt card indicates that the Office acknowledged receipt Petitioner's application including at least one copy of the Provisional Application;
- therefore, that evidence and acknowledgment should suffice to obtain a filing date as to the omitted description.

While Petitioners can report what they that they recall doing more than 17 months prior to this

writing and submit what purports to be a copy of a certified copy of their provisional application (Provisional Application No. 60/211,208), Petitioners' receipt card does not detail the contents more specifically than "copies of provisional"--e.g, there is no indication as to what provisional is being referenced, the number of pages included, or the elements contained therein (See: MPEP §503.[1]);

The Statutes and Rules of Practice before the Office provide many tools for applicants, patentees and practitioners to protect their prospective or actual property rights and those of their clients. However, persons who fail to use the tools, fail to gain the protections.

---

[1] The commentary at MPEP §503 provides in pertinent part:

§503 Application Number and Filing Receipt

37 C.F.R. §1.54. Parts of application to be filed together; filing receipt.

(a) It is desirable that all parts of the complete application be deposited in the Office together; otherwise, a letter must accompany each part, accurately and clearly connecting it with the other parts of the application. See § 1.53(f) and (g) with regard to completion of an application.

* * *

If a self-addressed postcard is submitted with a patent application, that postcard will be provided with both the receipt date and application number prior to returning it to the addressee. The application number identified on such a postcard receipt is merely the preliminary assignment of an application number to the application, and should not be relied upon (e.g., with respect to foreign filings) as necessarily representing the application number assigned to such application. See 37 C.F.R. 1.53(b).

The identifying data on the postcard should include:

(A) applicant's name(s);

(B) title of invention;

© number of pages of specification, claims (for nonprovisional applications), and sheets of drawing;

(D) whether oath or declaration is included;

(E) a list of any additional forms included with the application (e.g., application transmittal form, application data sheet, fee transmittal form, and/or provisional application cover sheet); and

(F) amount and manner of paying the fee.

A return postcard should be attached to *each* patent application for which a receipt is desired. It is important that the return postcard itemize all of the components of the application. If the postcard does not itemize each of the components of the application, it will not serve as evidence that any component which was not itemized was received by the United States Patent and Trademark Office (USPTO).

* * *

RETURN POSTCARD

If a receipt of any item (e.g., paper or fee) filed in the USPTO is desired, it may be obtained by enclosing with the paper a self-addressed postcard specifically identifying the item. The USPTO will stamp the receipt date on the postcard and place it in the outgoing mail. A postcard receipt which itemizes and properly identifies the items which are being filed serves as *prima facie* evidence of receipt in the USPTO of all the items listed thereon on the date stamped thereon by the USPTO.

The identifying data on the postcard should be so complete as to clearly identify the item for which receipt is requested. For example, the postcard should identify the applicant's name, application number (if known), confirmation number (if known), filing date, interference number, title of the invention, etc. The postcard should also identify the type of paper being filed, e.g., new application, affidavit, amendment, notice of appeal, appeal brief, drawings, fees, motions, supplemental oath or declaration, petition, etc., and the number of pages being submitted. If a new application is being filed, all parts of the application being submitted should be separately listed on the postcard, e.g., the number of pages of specification (including written description, claims and abstract), number of claims, number of sheets of drawings, number of pages of oath/declaration, number of pages of cover sheet (provisional application). The postcard receipt will not serve as *prima facie* evidence of receipt of any item which is not adequately itemized on the postcard. For example, merely listing on the postcard "a complete application" or "patent application" will not serve as a proper receipt for each of the required components of an application (e.g., specification (including claims), drawings (if necessary), oath or declaration and the application filing fee) or missing portions (e.g., pages, sheets of drawings) of an application if one of the components or portion of a component is found to be missing by the USPTO. Each separate component should be specifically and properly itemized on the postcard. Furthermore, merely incorporating by reference in the postcard receipt, the items listed in a transmittal letter will not serve as *prima facie* evidence of receipt of those items.

The person receiving the item(s) in the USPTO will check the listing on the postcard against the item(s) being filed to be sure they are properly identified and that all the items listed on the postcard are presently being submitted to the USPTO. If any of the items listed on the postcard are not being submitted to the USPTO, those items will be crossed off and the post-card initialed by the person receiving the items.

Upon return of a postcard receipt from the USPTO, the postcard receipt should be promptly reviewed by the person who filed the items to ensure that every item specifically denoted on the postcard was received by the USPTO. If the postcard receipt has been annotated to indicate that a particular item denoted on the postcard was not received by the USPTO, the postcard receipt will not serve as *prima facie* evidence of receipt of that item in the USPTO.

As has been discussed above, Petitioner's postcard was/is insufficiently detailed to determine what was or was not received by the Office (MPEP §503).

Therefore, absent a sufficiently detailed receipt postcard the petition under 37 C.F.R. §1.10 must be and hereby is **dismissed**.

Moreover, other than the unidentified "provisional" and fees, declarations and receipt card, Petitioners' own receipt card otherwise references only "PAGE 'CLAIMS[,]'" there is no reference to a written description, which is a required element of a non-provisional application without which an application cannot obtain a filing date.

Petitioners contend that they received a filing receipt dated 20 December, 2001, and that receipt is evidence that the description (through the copy of their provisional application) was received by the Office. In fact, the receipt makes no reference to the description--rather it addresses, *inter alia*, the number of claims identified in Petitioners' application. Moreover, the language of the receipt indicates that changes may be expected

Therefore, absent clear and specific evidence that all requisite components of the application were included on the date of first deposit (i.e., 6 June, 2001), the petition under 37 C.F.R. §1.53 for a filing date of 6 June, 2001, must be and hereby is **dismissed**.

Because this petition was not occasioned by the Office, the fee will not be refunded.

The application is being returned to OIPE for further processing with a filing date of 10 May, 2002, using the pages of specification filed on that date, and then for examination in due course..

Telephone inquiries concerning this decision may be directed to the undersigned at (703)305-9199.

John J. Gillon, Jr.
Senior Attorney
Office of Petitions
Office of the Deputy Commissioner
for Patent Examination Policy

UNITED STATES PATENT AND TRADEMARK OFFICE

UNDER SECRETARY OF COMMERCE FOR INTELLECTUAL PROPERTY AND
DIRECTOR OF THE UNITED STATES PATENT AND TRADEMARK OFFICE
WASHINGTON, DC 20231
www.uspto.gov

JUN -5 2003

Paper No. 14

In re Application of	:	
George M. Mockry et al.	:	
Serial No. 09/878,860	:	DECISION ON PETITION
Filed: May 10, 2002	:	TO MAKE SPECIAL
For: METHOD OF RECORDING AND	:	
PLAYING BASEBALL GAME	:	
SHOWING EACH BATTER'S	:	
LAST PITCH	:	

Applicant's petition, filed May 20, 2003, requests that this application be rendered special for examination in that applicant is over sixty-five (65) years of age.

The petition has been reviewed and is found to be in compliance with the requirements for special status as set forth in Section 708.02(IV) of the Manual of Patent Examining Procedure (MPEP).

PETITION GRANTED.

E. Rollins-Cross, Director
Technology Center 3700

Freudenberg and Associates
P.O. Box 841
Durango, CO 81302

UNITED STATES PATENT AND TRADEMARK OFFICE

COMMISSIONER FOR PATENTS
UNITED STATES PATENT AND TRADEMARK OFFICE
P.O. BOX 1450
ALEXANDRIA, VA 22313-1450
www.uspto.gov

JJGJr. 11-03

Paper No. 21

BANNER & WITCOFF
1001 G STREET N W
SUITE 1100
WASHINGTON DC 20001

COPY MAILED

NOV 21 2003

OFFICE OF PETITIONS

In re Application of	:	
Mockry, et al.	:	
Application No.09/878,860	:	ON PETITION
Filed: 10 May, 2002	:	
Attorney Docket No. 006385.00001	:	

This is a decision on the renewed petition filed on 9 September, 2003, as a "Renewed Petition to for Corrected Filing Date"--treated as a petition under 37 C.F.R. §1.53--which requests that the application be accorded a filing date of 9 June, 2001.

For the reasons set forth below, the petition under: 37 C.F.R. §1.53 is **DISMISSED**.

The application was deposited on 9 June, 2001.

On 15 March, 2002, the Office mailed a "Notice of Incomplete Nonprovisional Application" and indicated that a filing date was not granted for the application because "the specification does not include a written description of the invention."

On 10 May , 2002, the applicants submitted a petition for a filing date. The applicants contended that one of them, George Mockery, assembled a copy of the provisional application, declarations for himself and his co-inventor Greg M. Mockery, a page of claims, a check in the amount of $355.00 and a self-addressed stamped receipt card, and submitted the package via US Postal Service Express Mail on 9 June, 2001. The applicant contended that their date-stamped receipt card supported their plea for relief. The entirety of the postcard states as follows:

> NEW APPLICATION TRANSMITTAL (SMALL ENTITY)
> 4 ORIGINAL COPIES OF PROVISIONAL
> PAGE "CLAIMS"
> CASHIERS CHECK FOR $355.00
> 2 DECLARATION FORMS
> SELF ADDRESSED POST CARD (FOR RECEIPT PURPOSES)

Notably, the post card fails to state not only the number of pages in the provisional application, but any identifying information about the application such as the application number and filing date--in this case 60/211,208 and 13 June, 2000, respectively.

In dismissing the petition on 14 August, 2002, the decision stated:

> Unfortunately, Petitioner's postcard receipt does not identify the number of pages filed in the specification, but only notes that "4 original copies of provisional" were filed. Thus applicant's postcard receipt fails to demonstrate that a written description of the invention was present upon filing the instant application.

In their renewed petition filed on 7 October, 2002, the applicants argued that:

- the applicants, acting *pro se*, assembled and submitted the materials consisting of a copy of the provisional application
- on deposit the Office did not alter the post card content listing, thus indicating that the Office received the complete application; and then
- on 20 December, 2001, the Office issued a filing receipt and a foreign filing license and set a projected publication date of 28 March 2002;
- moreover, it was not until 15 March, 2002, as the application made its way to the process of being prepared for publication at 18 months, that for the first time the Office determined that the application was incomplete.

The applicants then argued that the Office's practice, stated at MPEP §506, imposed an "affirmative duty on the OIPE to give the applicant notice of any defects in the filing of a nonprovisional application, and to issue a PTO-1123 Notice of Incomplete Application."

In dismissing the petition on 18 November, 2002, the decision stated:

> While Petitioners can report * * * what they recall doing more than 17 month prior to this writing and submit what purports to be a copy of a certified copy of their provisional application * * *, Petitioners' receipt card does not detail the content more specifically than "copies of provisional"--there is no indication as to what provisional is being referenced, the number of pages included, or the elements contained therein (See: MPEP §503).

In seeking reconsideration in this matter, the instant petition of 9 September, 2003, addresses no

new issues, but rather contends that the applicants' "postcard does itemize each of the component parts that were submitted." And continues:

> Comparing the itemized list of the postcard to the MPEP instructions, one sees that each of the component parts are (sic) separately listed, *viz.*, the claims are specified (item 3), the declaration is specified (item 5), the filing fee is specified (item 4) and contrary to the previous decisions the specification ins specified (item 2) "4 Original Copies of Provisional." What else could this item constitute? Applicant was submitting a patent application.

It is the duty of applicants herein to evidence in clear, unmistakable, non-equivocating language what an "item constitutes," and they do not satisfy that requirement with their inquiry as to "what else"--what other possibility--they could be or could have been referring.

Applicants failed to identify in their postcard receipt their provisional application by number and filing date. They did not specify the number of pages contained. They failed to set forth what provisional it was they were submitting to stand as their specification.

Thus, they failed to identify their written description, which is a requirement of a non-provisional application and without which an application cannot obtain a filing date.

They do not now carry their burden of proof by inquiring as to what else it could have been.

The Office is not unmindful that, in their efforts to conserve resources, the applicants elected to assemble their application themselves rather than have the process undertaken by a registered practitioner. But, having done so, the applicants bear the responsibility of that election.

In truth and in fact, the receipt card in question was and is insufficiently detailed to determine what was or was not received by the Office (MPEP §503).

Therefore, absent a sufficiently detailed postcard receipt, the petition must be and hereby is **dismissed**.

Because this petition was not occasioned by the Office, the fee will not be refunded.

The application is being returned to Technology Center 3700 for further processing with the existing filing date of 10 May, 2002.

Telephone inquiries concerning this decision may be directed to the undersigned at (703)305-9199.

John J. Gillon, Jr.
Senior Attorney
Office of Petitions

UNITED STATES PATENT AND TRADEMARK OFFICE

COMMISSIONER FOR PATENTS
UNITED STATES PATENT AND TRADEMARK OFFICE
P.O. BOX 1450
ALEXANDRIA, VA 22313-1450
www.uspto.gov

Paper No. 26

BANNER & WITCOFF
1001 G STREET N W
SUITE 1100
WASHINGTON DC 20001

COPY MAILED
JUN 07 2004
OFFICE OF PETITIONS

In re Application of	:	
Mockry, et al.	:	
Application No.09/878,860	:	ON PETITION
Filed: 10 May, 2002	:	
Attorney Docket No. 006385.00001	:	

This is a decision on a renewed petition (styled: "Request for Reconsideration and Final Agency Action I Connection with Petition for Corrected Filing Date") filed on 12 March, 2004 (but not delivered to this office until this writing). Such a petition normally would be treated as a petition under 37 C.F.R. §1.53--which requests that the application be accorded a filing date of 9 June, 2001, rather than the presently accorded filing date of 10 May, 2002, however, by direction the decision references 37 C.F.R. §1.181.

BACKGROUND, STATUTES, REGULATIONS

The application was deposited as a nonprovisional application on 9 June, 2001, by the then-*pro se* applicants George Mockery and co-inventor Greg M. Mockery (hereinafter Messrs. George and Greg Mockery or Applicants).

On 15 March, 2002, the Office mailed a "Notice of Incomplete Nonprovisional Application" and indicated that a filing date was not granted for the application because "the specification does not include a written description of the invention."

On 10 May, 2002, Messrs. George and Greg Mockery submitted: a petition (with fee) for a filing date; a copy of the Provisional Application No. 60/211,208 filed on 13 June, 2000; a copy of

their receipt card (see: MPEP §503[1]) from the deposit (the record reflects that the date stamp

---

[1] MPEP §503 provides in pertinent part:

§503 Application Number and Filing Receipt

* * *

If a self-addressed postcard is submitted with a patent application, that postcard will be provided with both the receipt date and application number prior to returning it to the addressee. The application number identified on such a postcard receipt is merely the preliminary assignment of an application number to the application, and should not be relied upon (e.g., with respect to foreign filings) as necessarily representing the application number assigned to such application. See 37 C.F.R. §1.53(b).

The identifying data on the postcard should include:

(A) applicant's name(s);

(B) title of invention;

(C) number of pages of specification, claims (for nonprovisional applications), and sheets of drawing;

(D) whether oath or declaration is included;

(E) a list of any additional forms included with the application (e.g., application transmittal form, application data sheet, fee transmittal form, and/or provisional application cover sheet); and

(F) amount and manner of paying the fee.

A return postcard should be attached to *each* patent application for which a receipt is desired. It is important that the return postcard itemize all of the components of the application. If the postcard does not itemize each of the components of the application, it will not serve as evidence that any component which was not itemized was received by the United States Patent and Trademark Office (USPTO). It should be recognized that the identification of an application by application number does not necessarily signify that the USPTO has accepted the application as complete (37 C.F.R. §1.53(a)).

OIPE mails a filing receipt to the attorney or agent, if any, otherwise to the applicant, for each application filed which meets the minimum requirements to receive a filing date. The filing receipt includes the application number, filing date, a confirmation number, a suggested class in the U.S. Patent Classification System (see MPEP §902.01), and the number of an art unit where the application is likely to be examined. The filing receipt also includes other information about the application as applicable, such as continuing data, national stage data, foreign priority data, foreign filing license data, entity status information, and the date the Office anticipates publishing the application under 35 U.S.C. §122(b). The filing receipt represents the official assignment by the USPTO of a specific application number and confirmation number to a particular application. See 37 C.F.R. §1.54(b). The application number officially assigned to an application on the filing receipt may differ from the application number identified on a postcard receipt submitted with such application, and, as between inconsistent filing receipts and postcard receipts, the application number on the filing receipt is controlling.

* * *

A nonprovisional application, other than a CPA filed under 37 C.F.R. §1.53(d), is entitled to a filing date as of the date of receipt of the specification, including claims, and any required drawing. See 37 C.F.R. §1.53(b). The filing receipt will be mailed at the time a determination is made that the application meets the minimum requirements to receive a filing date. The oath or declaration and filing fee may be filed later than the remaining application papers, but if so, they must be accompanied by the required surcharge. See 37 C.F.R. §1.53(f). If the oath or declaration, and/or filing fee, and appropriate surcharge are not timely filed, the application will be abandoned.

* * *

RETURN POSTCARD

If a receipt of any item (e.g., paper or fee) filed in the USPTO is desired, it may be obtained by enclosing with the paper a self-addressed postcard specifically identifying the item. The USPTO will stamp the receipt date on the postcard and place it in the outgoing mail. A postcard receipt which itemizes and properly identifies the items which are being filed serves as *prima facie* evidence of receipt in the USPTO of all the items listed thereon on the date stamped thereon by the USPTO.

The identifying data on the postcard should be so complete as to clearly identify the item for which receipt is requested. For example, the postcard should identify the applicant's name, application number (if known), confirmation number (if known), filing date, interference number, title of the invention, etc. The postcard should also identify the type of paper being filed, e.g., new application, affidavit, amendment, notice of appeal, appeal brief, drawings, fees, motions, supplemental oath or declaration, petition, etc., and the number of pages being submitted. If a new application is being filed, all parts of the application being submitted should be separately listed on the postcard, e.g., the number of pages of specification (including written description, claims and abstract), number of claims, number of sheets of drawings, number of pages of oath/declaration, number of pages of cover sheet (provisional application).

The postcard receipt will not serve as *prima facie* evidence of receipt of any item which is not adequately itemized on the postcard. For example, merely listing on the postcard "a complete application" or "patent application" will not serve as a proper receipt for each of the required components of an application (e.g., specification (including claims), drawings (if necessary), oath or declaration and the application filing fee) or missing portions (e.g., pages, sheets of drawings) of an application if one of the components or portion of a component is found to be missing by the USPTO. Each separate component should be specifically and properly itemized on the postcard. Furthermore, merely incorporating by reference in the postcard receipt, the items listed in a transmittal letter will not serve as *prima facie* evidence of receipt of those items.

The person receiving the item(s) in the USPTO will check the listing on the postcard against the item(s) being filed to be sure they are properly identified and that all the items listed on the postcard are presently being submitted to the USPTO. If any of the items listed on the postcard are not being submitted to the USPTO, those items will be crossed off and the post-card initialed by the person receiving the items. Upon return of a postcard receipt from the USPTO, the postcard receipt should be promptly reviewed by the person who filed the items to ensure

6/9/019 is crossed out and a date stamp of 5/10/02 is substituted); a supporting declaration of George Mockery[2] contending that he assembled a copy of the provisional application, declarations for himself and his co-inventor Greg M. Mockery, a page of claims, a check in the amount of $355.00 and a self-addressed stamped receipt card, and submitted the package via US Postal Service Express Mail on 9 June, 2001.

The petition contended that their date-stamped receipt card[3] supported their plea for relief.

The 10 May petition was dismissed on 14 August, 2002.

A renewed petition filed on 7 October, 2002, argued that: the applicants, acting *pro se*, assembled and submitted the materials consisting of a copy of the provisional application; on deposit the Office did not alter the post card content listing, thus indicating that the Office received the complete application; and then on 20 December, 2001, the Office issued a filing receipt and a foreign filing license and set a projected publication date of 28 March 2002; and it was not until 15 March, 2002, that for the first time the Office determined that the application was incomplete.

The 7 October, 2002, petition was dismissed on 18 November, 2002.

In seeking further reconsideration in this matter, a petition filed by present Counsel (Petitioner)

---

that every item specifically denoted on the postcard was received by the USPTO. If the postcard receipt has been annotated to indicate that a particular item denoted on the postcard was not received by the USPTO, the postcard receipt will not serve as *prima facie* evidence of receipt of that item in the USPTO.

[2] The declaration of George Mockery states, in pertinent part:

* * *

During the first week of June, 2001, Greg M. Mockery and I decided to file a regular non-provisional application based on our then-pending provisional application, Ser. No. 60/211,208, filed June 13, 2000. I assembled all the papers, including Declarations signed respectively by myself and Greg M. Mockery; a specification, which was in the form of a complete copy of the above-mentioned provisional application Ser No. 60/211, 202 (sic); a page of Claims; a cashier's check from Citizen State Bank of Cortez for $355.00; and a self-addressed stamped post card that listed each item being submitted. I then placed these materials into an envelope addressed to the Commissioner of Patents with sufficient postage for Express Mail. This envelope was deposited with the United States Postal Service on June 9, 2001.

A few days later I received back the return receipt post card, which now carried indicia showing the filing date (06/09/01) and the application serial number (09/878[,]860). The exhibit attached hereto is a true copy of the said return receipt post card. The post card has not been altered in any way since I received it.

* * *

Signed /s/ George Mockery
Dated this 15th day of April, 2002

[3] The entire contents of the postcard are as follows:

NEW APPLICATION TRANSMITTAL (SMALL ENTITY)
4 ORIGINAL COPIES OF PROVISIONAL
PAGE "CLAIMS"
CASHIERS CHECK FOR $355.00
2 DECLARATION FORMS
SELF ADDRESSED POST CARD (FOR RECEIPT PURPOSES)

on 9 September, 2003, contended that the Applicants' "postcard does itemize each of the component parts that were submitted."

The 9 September, 2003, petition was dismissed on 21 November, 2003.

Petitioner contends in the most recent petition of 12 March, 2004, that: the Office ignored Applicants' arguments of 7 October, 2003, with regard to the filing receipt mailed by the Office on 20 December, 2001; the filing receipt, rather than Applicants' receipt card, controls as to defining which items were received by the Office on the deposit date of 9 June, 2001; the Office's practice, stated at MPEP §506, imposed an "affirmative duty on the Office of Initial Patent Examination (OIPE) to give the applicant notice of any defects in the filing of a nonprovisional application, and to issue a PTO-1123 Notice of Incomplete Application."

Pertinent statutes include 35 U.S.C. §21,[4] §111[5] and §112[6]

---

[4] 35 U.S.C. §21 states in pertinent part:

* * *

(a) The Director may by rule prescribe that any paper or fee required to be filed in the Patent and Trademark Office will be considered filed in the Office on the date on which it was deposited with the United States Postal Service or would have been deposited with the United States Postal Service but for postal service interruption or emergencies designated by the Director.

* * *

[5] 35 U.S.C. §111 states in pertinent part:

* * *

(a) In general.

(1) Written Application. An application for patent shall be made, or authorized to be made, by the inventor, except as otherwise provided in this title, in writing to the Director.

(2) Contents. Such application shall include--

(A) a specification as prescribed by section 112 of this title;

(B) a drawing as prescribed by section 113 of this title;

(C) an oath by the applicant as prescribed by section 115 of this title

(3) Fee and oath. The application must be accompanied by the fee required by law. The fee and oath may be submitted after the specification and any required drawing are submitted, within such period and under such conditions, including the payment of a surcharge, as may be prescribed by the Director.

(4) Failure to submit. Upon failure to submit the fee and oath within such prescribed period, the application shall be regarded as abandoned, unless it is shown to the satisfaction of the Director that the delay in submitting the fee and oath was unavoidable or unintentional. The filing date of an application shall be the date on which the specification and any required drawing are received in the Patent and Trademark Office.

* * *

[6] 35 U.S.C. §112 states in pertinent part:

* * *

The specification shall contain a written description of the invention, and of the manner and process of making and using it, in such full, clear, concise, and exact terms as to enable any person skilled in the art to which it pertains, or with which it is most nearly connected, to make and use the same, and shall set forth the best mode contemplated by the inventor of carrying out his invention. (Emphasis supplied.)

* * *

Pertinent regulations include 37 C.F.R. §1.53(b)[7] and §1.71.[8]

CONCLUSION

The most recent renewed petition again requests that the application be accorded a filing date of 9 June, 2001, rather than the presently accorded filing date of 10 May, 2002. Petitioner argues that the Office has failed to consider the argument that MPEP §503 is controlling in this matter.

By express direction to state that the postcard receipt constitutes sufficient evidence of receipt of the provisional application, the petition is **granted**.

The filing date of the application will be 9 June, 2001, and the fee ($130.00) will be refunded via Treasury check to former Counsel who submitted the original payment.

The application is being forwarded to Publications Branch to be processed into a patent with a filing date of 9 June, 2001, using the copy of the application deposited on 10 May, 2002.

Telephone inquiries concerning this decision may be directed to the Office of Petitions at (703)305-9282.

John J. Gillon, Jr.
Senior Attorney
Office of Petitions

---

[7] 37 C.F.R. §1.53(b) states in pertinent part:

* * *

Application filing requirements--Nonprovisional application. The filing date of an application for patent filed under this section, except for a provisional application under paragraph (c) of this section or a continued prosecution application under paragraph (d) of this section, is the date on which a specification as prescribed by 35 U.S.C. §112 containing a description pursuant to §1.71 and at least one claim pursuant to §1.75, and any drawing required by §1.81(a) are filed in the Patent and Trademark Office.

* * *

[8] 37 C.F.R. §1.71 states in pertinent part:

* * *

(a) The specification must include a written description of the invention or discovery and of the manner and process of making and using the same, and is required to be in such full, clear, concise, and exact terms as to enable any person skilled in the art or science to which the invention or discovery appertains, or with which it is most nearly connected, to make and use the same.

(b) The specification must set forth the precise invention for which a patent is solicited, in such manner as to distinguish it from other inventions and from what is old. It must describe completely a specific embodiment of the process, machine, manufacture, composition of matter or improvement invented, and must explain the mode of operation or principle whenever applicable. The best mode contemplated by the inventor of carrying out his invention must be set forth.

* * *

UNITED STATES PATENT AND TRADEMARK OFFICE

Commissioner for Patents
United States Patent and Trademark Office
P.O. Box 1450
Alexandria, VA 22313-1450
www.uspto.gov

Paper No. 7

Kenneth S. Wheelock
GE Plastics
One Plastics Avenue
Pittsfield, MA 01201

RECEIVED
DEC 1 0 2004
OFFICE OF PETITIONS

In re Application of :
John A. Kilgour, et. al. :
Application No. 09/878,888 : ON PETITION
Filed: June 11, 2001 :
Attorney Docket No. US 60SI1963-5 :

This is a decision on the petition under 37 CFR 1.137(b), filed November 5, 2004, to revive the above-identified application.

The above-identified application became abandoned for failure to reply in a timely manner to the Notice to File Missing Parts of Application mailed August 6, 2001. The Notice set a period for reply of two (2) months from the mail date of the Notice. No extensions of time under the provisions of 37 CFR 1.136(a) were obtained. Accordingly, the above-identified application became abandoned after midnight October 6, 2001. A Notice of Abandonment was mailed November 7, 2003.

In response, petitioner submitted with the instant petition $1,370 for the petition to revive fee, an executed Oath/Declaration, and a $130 surcharge for the late filing of the Oath/Declaration.

The petition is **GRANTED**.

The application file is being forwarded to the Office of Initial Patent Examination for further processing.

Telephone inquiries concerning this decision should be directed to the undersigned at (571) 272-3226.

Andrea Smith
Petitions Examiner
Office of Petitions
Office of the Deputy Commissioner
for Patent Examination Policy

UNITED STATES PATENT AND TRADEMARK OFFICE

COMMISSIONER FOR PATENTS
UNITED STATES PATENT AND TRADEMARK OFFICE
P.O. BOX 1450
ALEXANDRIA, VA 22313-1450
www.uspto.gov

MAILED

APR 12 2004

DIRECTOR'S OFFICE
TECHNOLOGY CENTER 3600

KILPATRICK STOCKTON LLP
607 14TH STREET, N.W.
SUITE 900
WASHINGTON DC 20005

In re application of
Robert E. Patricelli et al.
Application No. 09/878,891
Filed: June 11, 2001
For: SYSTEM AND METHOD FOR PROCESSING FLEXIBLE SPENDING ACCOUNT TRANSACTIONS

DECISION ON PETITION TO MAKE SPECIAL (ACCELERATED EXAMINATION)

This is in response to the petition filed on September 29, 2003 to make the above-identified application special on the basis of special examining procedure for certain new applications - accelerated examination as set forth in MPEP § 708.02 VIII. The delay in deciding this petition is regretted.

The requirements for granting special status under this section are: (A) a petition to make special accompanied by the fee set forth in 37 CFR 1.17(i); (B) all claims being directed to a single invention, or an election without traverse if the Office determines that all the claims are not directed to a single invention; (C) a statement that a pre-examination search was made listing the field of search; (D) one copy of each of the references deemed most closely related to the subject matter encompassed by the claims if said references are not already of record; and (E) a detailed discussion of how the claimed subject matter is patentable over the references in accordance with 37 CFR 1.111 (b) and (c).

Since all of the requirements for special status under MPEP § 708.02 VIII have been met, the petition is **GRANTED**.

The examiner is directed (1) to make an interference search for possible interfering applications, (2) to promptly examine this application out of turn, and (3) if any interfering application is discovered, to examine such application simultaneously and state in the first official letter of such application that it is being taken out of turn because of a possible interference.

Petitioner is advised that this application will continue to be special, throughout its entire prosecution and pendency, including interference or appeal, if any, only if petitioner makes a prompt ***bona fide*** effort, in response to each Office action, to place the application in condition for allowance, even if it is necessary to conduct an interview with the examiner to accomplish this purpose.

SUMMARY: Petition to Make Special **GRANTED.**

Steven N. Meyers
Special Programs Examiner
Technology Center 3600
(703) 308-3868

SNM/mjz: 4/8/04

UNITED STATES PATENT AND TRADEMARK OFFICE

COMMISSIONER FOR PATENTS
UNITED STATES PATENT AND TRADEMARK OFFICE
P.O. BOX 1450
ALEXANDRIA, VA 22313-1450
www.uspto.gov

APR - 5 2004

ADE & COMPANY
1700-360 MAIN STREET
WINNIPEG, MANITOBA, CANADA

In re Application of
Gordon W. Glazner
Serial No.: 09/878,918 : WITHDRAWAL OF ABANDONMENT
Filing Date: January 14, 2004 :
Attorney Docket No. 18444-503 :

This letter is in response to the Petition under 37 CFR ¶ 1.181, filed January 14, 2004, to withdraw the notice of abandonment.

A review of the electronic file history shows that the Office mailed a requirement for restriction/election on July 2, 2003, with the deadline for responding being August 2, 2003. The Petitioner has provided the Office with a copy of the returned receipt postcard from the US Patent and Trademark Office showing an extension of time "two months", Money Order in the amount of $205.00 and a response was in fact timely filed on October 1, 2003.

Neither the electronic file history nor PALM shows a record of a "Notice of Missing Parts" or "Notice of Abandonment" ever being mailed in this particular application. The Office apologizes for the inconvenience of an apparent erroneous error. The application remains in an active status and has been forwarded to the Examiner for further prosecution.

DECISION

The Petition is **GRANTED** in view of the response filed October 1, 2003 and re-filed January 14, 2004.

Should there be any questions with regard to this letter, please contact Special Program Examiner Julie Burke by letter addressed to the Director, Technology Center 1600, PO Box 1450, Alexandria, VA 22313-1450 or by telephone at (571) 272-0512 or by facsimile transmission at (703) 872-9306.

J Burke for
John Doll
Director, Technology Center 1600

UNITED STATES PATENT AND TRADEMARK OFFICE

Commissioner for Patents
United States Patent and Trademark Office
P.O. Box 1450
Alexandria, VA 22313-1450
www.uspto.gov

ADE & COMPANY
1700-360 MAIN STREET
WINNIPEG MB R3C3Z-3 CA CANADA

COPY MAILED

DEC 07 2005

OFFICE OF PETITIONS

In re Application of :
Gordon W. Glazner :
Application No. 09/878,918 :
Filed: June 13, 2001 :
Attorney Docket Number: 84894-602 :

ON PETITION

This is a decision on the petition filed October 25, 2005, which is treated under 37 CFR 1.181, in accordance with the reasoning of the decision in Delgar Inc. v. Schuyler, 172 USPQ 513.

The petition is **GRANTED**.

A non-Final Office Action was mailed June 25, 2004. A response was due not later than September 25, 2004. A response in the form of an amendment was filed October 22, 2004 with a one month extension of time request. On November 19, 2004 the applicant was advised that the amendment filed was non-compliant under 37 CFR 1.121. The time for response was one month from the mailing of the November 19, 2004 Notice. No response having been filed, a Notice of Abandonment was mailed September 21, 2005.

Petitioner asserts that the Notice of Non-Compliant Amendment was never received.

The file record discloses that the Notice of Non-Compliant Amendment was mailed to the address of record which is the same address used on all correspondences from the USPTO including the Notice of Abandonment. Petitioner has provided a copy of the patent file and docketing records fo this specific application, wherein receipt of the Notice of Non-Compliant Amendment , mailed November 19, 2004, would have been filed, had it been received. Petitioner also documents the procedures used for handling of USPTO correspondence in an effort to show that the Notice mailed November 19, 2004 was not received.

In that the statement from the petitioner and the exhibit from the docket record for the instant matter show no entry indicating receipt of the Notice of Non-Compliant Amendment mailed November 19, 2004, it is apparent that the Notice of Non-Compliant Amendment was not received. The evidence submitted corroborates non-receipt of the Notice of Non-Compliant Amendment .

In view of the facts set forth in the petition, it is concluded that the Notice of Non-Compliant Amendment was never received at the address of record. Accordingly, the holding of abandonment is withdrawn and the Notice of Abandonment is vacated. No petition fee Is due and none has been charged.

The file is being forwarded to Technology Center 1617 for the remailing of the Notice of Non-Compliant Amendment originally mailed on November 19, 2004. Telephone inquiries concerning the remailing of the Notice of Non-Compliant Amendment should be referred to the Technology Center. All other inquiries regarding this decision may be directed to the undersigned Petitions Attorney at (571) 272-3212.

Patricia Faison-Ball

Patricia Faison-Ball
Senior Petitions Attorney
Office of Petitions

UNITED STATES PATENT AND TRADEMARK OFFICE

COMMISSIONER FOR PATENTS
UNITED STATES PATENT AND TRADEMARK OFFICE
P.O. BOX 1450
ALEXANDRIA, VA 22313-1450
www.uspto.gov

LEE & HAYES PLLC
421 W RIVERSIDE AVENUE SUITE 500
SPOKANE, WA 99201

COPY MAILED
MAY 14 2008
OFFICE OF PETITIONS

In re Application of	:	
Henry L. Sanders, et al.	:	
Application No.: 09/878,950	:	ON PETITION
Filed: June 11, 2001	:	
Attorney Docket No.: MS1-771US	:	

This is a decision on the petition, filed May 12, 2008, under 37 CFR 1.313(c)(2) to withdraw the above-identified application from issue after payment of the issue fee.

The petition is **GRANTED**.

The above-identified application is withdrawn from issue for consideration of a submission under 37 CFR 1.114 (request for continued examination). See 37 CFR 1.313(c)(2).

Petitioner is advised that the issue fee paid on April 30, 2008, cannot be refunded. If, however, this application is again allowed, petitioner may request that it be applied towards the issue fee required by the new Notice of Allowance.[1]

Telephone inquiries relating to this decision should be directed to the undersigned at (571) 272-3204.

The application is being referred to Technology Center AU 2194 for further processing of the request for continued examination under 37 CFR 1.114 and for consideration of the concurrently filed Information Disclosure Statement (IDS).

Sherry D. Brinkley
Petitions Examiner
Office of Petitions

[1] *The request to apply the issue fee to the new Notice may be satisfied by completing and returning the new Part B - Fee(s) Transmittal Form (along with any balance due at the time of submission). Petitioner is advised that the Issue Fee Transmittal Form must be completed and timely submitted to avoid abandonment of the application.*

UNITED STATES PATENT AND TRADEMARK OFFICE

COMMISSIONER FOR PATENTS
UNITED STATES PATENT AND TRADEMARK OFFICE
WASHINGTON, D.C. 20231
www.uspto.gov

COPY MAILED

DEC 0 6 2001

OFFICE OF PETITIONS

Paper No. 4

Jim Zegeer
Suite 108
801 North Pitt Street
Alexandria, VA 22314

In re Application of
Bala K. Velayudhan et al.
Application No. 09/878,953
Filed: June 13, 2001
For: ADDRESSING OF AC PLASMA DISPLAY

DECISION GRANTING PETITION FOR WITHDRAWAL OF APPLICATION PUBLICATION PURSUANT TO 35 U.S.C. § 122(b)

This is a decision on the petition filed November 20, 2001, requesting, in effect, that the above-identified application be treated as an application that has **not** been published pursuant to 35 U.S.C. § 122(b).

The petition is **granted** to the extent indicated below:

(1) The USPTO will withdraw the patent application publication for the above-identified application from its internal and external search databases for patent application publications;

(2) The USPTO's Patent Application Location and Monitoring (PALM) and Patent Application Information Retrieval (PAIR) Systems will be modified to indicate that copies of and access to the above-identified application are **not** to be provided pursuant to 37 CFR 1.14(c)(2) and 1.14(e)(2);

(3) The publication number will be added to a list of withdrawn publications on the USPTO web site; and

(4) The USPTO will notify external database providers and its patent data exchange partners which are intellectual property offices of the withdrawal.

No fee has been assessed to the instant petition. The application is being returned to Technology Center 2600 for examination in due course.

Telephone inquiries specific to this matter should be directed to Joni Chang at (703) 308-3858.

Robert W. Bahr
Senior Patent Attorney
Office of the Deputy Commissioner
for Patent Examination Policy

UNITED STATES PATENT AND TRADEMARK OFFICE

Commissioner for Patents
United States Patent and Trademark Office
P.O. Box 1450
Alexandria, VA 22313-1450
www.uspto.gov

Kilpatrick Stockton LLP
Attn: John S Pratt
1100 Peachtree Street
Suite 2800
Atlanta GA 30309-4530

In re Application of	:	
Cham et al.	:	DECISION ON PETITION
Serial No. : 09/879,002	:	FOR CORRECTION
Filed : December 22, 1995	:	OF INVENTORSHIP
For: **TREATMENT FOR CARDIAC AND RELATED DISEASES**	:	

This is a decision on petitioner's request for correction of inventorship under 37 CFR 1.324, filed on June 12, 2001.

Applicant has complied with the above requirements for this request. Accordingly, the petition to correct inventorship is GRANTED.

Summary: Petition to correct inventorship is granted.

Angela Sykes
SPE, Art Unit 3762
Phone: (571) 272-4955

UNITED STATES PATENT AND TRADEMARK OFFICE

COMMISSIONER FOR PATENTS
UNITED STATES PATENT AND TRADEMARK OFFICE
P.O. BOX 1450
ALEXANDRIA, VA 22313-1450
www.uspto.gov

MAIL

MAY 13 2005

DIRECTOR OFFICE
TECHNOLOGY CENTER 2600

GLENN PATENT GROUP
3475 EDISON WAY, SUITE L
MENLO PARK CA 94025

In re Application of
KUO, ING-DER
Application No. 09/879,022
Filed: June 11, 2001
For: **WIRELESS MUSIC SYSTEM**

DECISION ON REQUEST TO WITHDRAW FROM RECORD

This is a decision on the request for withdrawal as agent of record filed on February 04, 2005.

A grantable request to withdraw as agent of record must:
(1) indicate the present mailing address of the attorney(s)/agent(s) who seek(s) to withdraw, and
(2) be signed by each attorney/agent seeking to withdraw or clearly be signed on their behalf, and
(3) be *approved* at least thirty (30) days prior to the maximum extendable period for response to any outstanding Office Action, and
(4) indicate the address to which future correspondence should be mailed.

Petitioner has met all of the above. Accordingly, the request is **GRANTED**.

All future communications from the Office will be directed to the address listed below until otherwise notified by applicant. Applicant is reminded of the obligation to promptly notify the Patent and Trademark Office of any change in correspondence address to ensure receipt of all communications from the Office.

Kenneth Wieder
Special Program Examiner
Technology Center 2600
Communications
(703) 305-4701

cc:

Jennifer Chen
6 Floor, Number 94,
Shin-Tai 5th Road, Section 1
Shijr City, Taipei

UNITED STATES PATENT AND TRADEMARK OFFICE

Commissioner for Patents
United States Patent and Trademark Office
P.O. Box 1450
Alexandria, VA 22313-1450
www.uspto.gov

SAWYER LAW GROUP LLP
P.O. BOX 51418
PALO ALTO, CA 94303

COPY MAILED

JUN 19 2007

OFFICE OF PETITIONS

In re Application of :
Philip S. Coulthard :
Application No. 09/879,024 :
Filed: June 11, 2001 :
Attorney Docket No. CA920010014US1/2182P :

ON PETITION

This is a decision on the petition, filed January 17, 2007, to revive the above-identified application under 37 CFR 1.137(b).

This application became abandoned for failure to timely file a reply within the meaning of 37 CFR 1.113 to the final Office action of June 27, 2006. This decision precedes the mailing of a Notice of Abandonment. The proposed reply required for consideration of a petition to revive must be a Notice of Appeal (and appeal fee required by 37 CFR 41.20(b)(2)), an amendment that *prima facie* places the application in condition for allowance, a Request for Continued Examination (RCE) and submission (37 CFR 1.114), or the filing of a continuing application under 37 CFR 1.53(b). See MPEP 711.03(c)(III)(A)(2).

The petition satisfies the requirements of 37 CFR 1.137(b) in that petitioner has supplied (1) the reply in the form of a Notice of Appeal and appeal fee; (2) the petition fee of 1,500; and (3) a proper statement of unintentional delay.

The application file does not indicate a change of address has been filed in this case, although the address given on the petition differs from the address of record. If appropriate, a change of address should be filed in this case in accordance with MPEP 601.03. A courtesy copy of this decision is being mailed to the address noted on the petition. However, until otherwise instructed, all future correspondence regarding this application will be mailed solely to the address of record.

The application is being referred to Technology Center AU 2178 for appropriate action on the Appeal Brief filed March 30, 2007.

Telephone inquiries concerning this decision may be directed to the undersigned at (571) 272-3204. Inquiries relating to the prosecution of the application should be referred to the Technology Center.

Sherry D. Brinkley
Petitions Examiner
Office of Petitions

cc: KELVIN VIVIAN
SAWYER LAW GROUP LLP
2465 EAST BAYSHORE ROAD
SUITE 406
PALO ALTO, CA 94303

UNITED STATES PATENT AND TRADEMARK OFFICE

UNITED STATES DEPARTMENT OF COMMERCE
United States Patent and Trademark Office
Address: COMMISSIONER FOR PATENTS
P.O. Box 1450
Alexandria, Virginia 22313-1450
www.uspto.gov

Zilka-Kotab, PC
P.O. Box 721120
San Jose, CA 95172-1120

Mail Date: 06/21/2010

Applicant	: Robert Grupe	: DECISION ON REQUEST FOR
Patent Number	: 7644352	: RECALCULATION of PATENT
Issue Date	: 01/05/2010	: TERM ADJUSTMENT IN VIEW
Application No	: 09/879,071	: OF WYETH AND NOTICE OF INTENT TO
Filed	: 06/13/2001	: ISSUE CERTIFICATE OF CORRECTION
		:

The Request for Recalculation is **GRANTED** to the extent indicated.

The patent term adjustment has been determined to be **808** days. The USPTO will *sua sponte* issue a certificate of correction reflecting the amount of PTA days determined by the recalculation.

Prior to the issuance of the certificate of correction, the USPTO will afford patentee an opportunity to be heard and request reconsideration. Accordingly, patentee has **one month or thirty (30) days**, whichever is longer, to file a request for reconsideration of this patent term adjustment calculation. See 35 U.S.C. 154(b)(3)(B)(ii) and 37 CFR 1.322(a)(4). No extensions of time will be granted under 37 CFR 1.136.

Patentee should use document code PET.OP if electronically filing a request for reconsideration of this patent term adjustment calculation. The patentee must also include the information required by 37 CFR 1.705(b)(2) and the fee required by 37 CFR 1.18(e). If patentee does not file a timely request for reconsideration of this patent term adjustment calculation including the information required by 37 CFR 1.705(b)(2) and the fee required by 37 CFR 1.18(e), the USPTO will issue a certificate of correction reflecting the PTA determination noted above.

Patentee should be aware that in order to preserve the right to review in the United States District Court for the District of Columbia of the USPTO patent term adjustment determination, patentee must ensure that he or she also take the steps required under 35 U.S.C. 154(b)(4)(A) in a timely manner. Nothing in the request for recalculation should be construed as providing an alternative time frame for commencing a civil action under 35 U.S.C. 154(b)(4)(A).

Any questions concerning this decision should be directed to the Office of Patent Legal Administration at 571-272-7702.

UNITED STATES PATENT AND TRADEMARK OFFICE

COMMISSIONER FOR PATENTS
UNITED STATES PATENT AND TRADEMARK OFFICE
P.O. BOX 1450
ALEXANDRIA, VA 22313-1450
WWW.USPTO.GOV

Paper No.

COPY MAILED

SEP 25 2007

OFFICE OF PETITIONS

STEVENS, DAVIS, MILLER & MOSHER, L.L.P.
1615 L Street, N.W., Suite 850
Washington DC 20036

In re Application of	:	
Kazuya Toki et al.	:	
Application No. 09/879,077	:	
Filed: June 13, 2001	:	DECISION ON PETITION
Attorney Docket No. L8734.01101	:	UNDER 37 C.F.R. § 1.181(A)
Title: TIME-DIVISION	:	
MULTIPLEXING RADIO SYSTEM	:	

This is a decision on the petition under 37 C.F.R. § 1.181(a) to withdraw the holding of abandonment, filed on July 12, 2007.

BACKGROUND

The above-identified application became abandoned for failure to reply in a timely manner to the non-final Office action, mailed March 7, 2006, which set a shortened statutory period for reply of three months. No response was received, and no extensions of time under the provisions of 37 C.F.R. § 1.136(a) were requested. Accordingly, the above-identified application became abandoned on June 8, 2006. A notice of abandonment was mailed on March 23, 2007.

With the present petition, Petitioner has alleged that the mailing was not received, and has included a copy of the docket report.

CONCLUSION

Petitioner has met the requirements of Delgar v. Schulyer, 172 USPQ 513 (D.D.C. 1971), in that he has asserted that the mailing

was not received, that he has searched the file jacket and the docket report, and he has included a copy of the latter.

Considering the facts and circumstances of the delay at issue, as set forth on petition, it is concluded that Petitioner has met his burden of establishing that the mailing was not received.

Accordingly, the petition under 37 C.F.R. § 1.181(a) is **GRANTED**. The holding of abandonment is **WITHDRAWN**.

The Technology Center will be notified of this decision. The Technology Center's support staff will re-mail the non-final action of March 7, 2006, and will set a new period for response.

Telephone inquiries regarding this decision should be directed to the undersigned at (571) 272-3225. All other inquiries concerning examination procedures or status of the application should be directed to the Technology Center.

Paul Shanoski
Senior Attorney
Office of Petitions
United States Patent and Trademark Office

SPE RESPONSE FOR CERTIFICATE OF CORRECTION

Paper No.: _____

DATE : 6/1/04

TO SPE OF : ART UNIT 2827

SUBJECT : Request for Certificate of Correction on Patent No.: 6,603,194

A response is requested with respect to the accompanying request for a certificate of correction.

Please complete this form and return with file, within 7 days to:
Certificates of Correction Branch - PK 3-~~945~~ 910
Palm location ~~7580~~ 7590 - Tel. No. 305-~~8309~~ 8201

With respect to the change(s) requested, correcting Office and/or Applicant's errors, should the patent read as shown in the certificate of correction? No new matter should be introduced, nor should the scope or meaning of the claims be changed.

Please see COCIN dated 1-15-04 in the table of contents in IFW.

Diana T. Rose
Certificates of Correction Branch

Thank You For Your Assistance

The request for issuing the above-identified correction(s) is hereby:
Note your decision on the appropriate box.

- ☒ **Approved** — All changes apply.
- ☐ **Approved in Part** — Specify below which changes do not apply.
- ☐ **Denied** — State the reasons for denial below

Comments:

KAMAND CUNEO
SUPERVISORY PATENT EXAMINER
TECHNOLOGY CENTER 2800

SPE

2827
Art Unit

PTOL-306 (REV. 7/03) U.S. DEPARTMENT OF COMMERCE Patent and Trademark Office

UNITED STATES PATENT AND TRADEMARK OFFICE

Commissioner for Patents
United States Patent and Trademark Office
P.O. Box 1450
Alexandria, VA 22313-1450
www.uspto.gov

STAAS & HALSEY LLP
SUITE 700
1201 NEW YORK AVENUE, N.W.
WASHINGTON DC 20005

MAILED

MAR 16 2006

DIRECTOR'S OFFICE
TECHNOLOGY CENTER 2600

In re Application of:
Mayumi Tomikawa, et al.
Application Serial No.: 09/879,098
Filed: June 13, 2001
For: APPARATUS AND METHOD FOR GENERATING A DATA DISTRIBUTION ROUTE

DECISION ON PETITION

This is a decision on the petition requesting withdrawal of the final action, filed January 12, 2006, pursuant to 37 CFR § 1.181.

Petitioner alleges that the examiner erred in holding the Office action mailed November 17, 2005 final and requests withdrawal of finality of the Office action.

A non-final Office action was mailed on March 26, 2004 rejecting all claims 1-19 as being anticipated by Naudus (US Patent No. 6,412,006). Applicant filed an amendment on July 26, 2004, wherein all independent claims were substantially amended and also new claims 20-26 were added. On November 18, 2004 the Examiner made a final Office action re-applying the Naudus reference to reject all pending claims. In a telephonic interview held on March 9, 2005 the examiner and the supervisor agreed that the final Office action of November 18, 2004 was improper. The interview summary was recorded as stating that "the Final Office action (1/18/04) is now withdrawn". On March 11, 2005, applicant filed a "Letter and Request for Contingent Extension of Time". As stated in this communication from applicant, because the previous Office action was withdrawn, no response was due and no extenstions of time were required. A review of the fee history also finds that no extension of time fees were charged. On November 17, 2005 the examiner rendered a new final Office action citing a new grounds of rejection rejecting all claims of record as being anticipated by Kodialam et al (US Patent No. 6,778,531) and setting forth that the new grounds of rejection were necessitated by amendment. The new final Office action dated November 17, 2005 was also mailed with a communication titled "Notice of withdrawing/vacating the previous office action" which clearly stated that because the previous office action was withdrawn/vacated, no response was needed from applicant.

Petitioner argues that the new final Office action mailed November 17, 2005 was improper and premature. Petitioner contends that the new final rejection was necessitated by the interview, not as the result of a new amendment.

It is noted that the amendment/response filed July 26, 2004 was entered. It is also noted that the Final rejection mailed November 18, 2004 was improper, and therefore, as set forth above, it was vacated. Because the November 18, 2004 Office action was vacated, the new final Office action mailed November 17, 2005 was responsive to the last communication of record (which was in fact the July 26, 2004 amendment). It is agreed that the July 26, 2004 amendment was re-considered in light of arguments made at the March 9, 2005 interview. Nonetheless, it is deemed that the new grounds of rejection were in fact necessitated by the July 26, 2004 amendment.

The petition fails to show that applicant's amendment received July 26, 2004 did not necessitate the new grounds set forth by the examiner.

Accordingly, the petition to withdraw finality is **DENIED**. The time period for reply continues to run from the November 17, 2005 mailing date of the Final rejection.

Any request for reconsideration must be filed within two months form the date of this decision.

Jeff Hoffman acting for 3/16/06

Mark Powell, Director
Technology Center 2600
Communications

UNITED STATES PATENT AND TRADEMARK OFFICE

COMMISSIONER FOR PATENTS
UNITED STATES PATENT AND TRADEMARK OFFICE
WASHINGTON, DC 20231
www.uspto.gov

Paper No. 4

MAILED

AUG 2 2 2003

DIRECTOR'S OFFICE
TECHNOLOGY CENTER 2600

ANTONELLI, TERRY, STOUT & KRAUS, LLP
1300 NORTH SEVENTEENTH STREET
SUITE 1800
ARLINGTON VA 22209-9889

In re Application of :
BAJIKAR, SUNDEEP M. :
Application No. 09/879,114 :
Filed: June 13, 2001 :
For: **MOBILE COMPUTER SYSTEM HAVING A NAVIGATION MODE TO OPTIMIZE SYSTEM PERFORMANCE AND POWER MANAGEMENT FOR MOBILE APPLICATIONS** :

DECISION ON REQUEST TO WITHDRAW AS ATTORNEY

This is a decision on the Request to Withdraw as Attorney/Agent of record filed on June 23, 2003.

A grantable request to withdraw as attorney/agent of record must do the following:
(1) indicate the present mailing address of the attorney(s)/agent(s) who seek(s) to withdraw, and
(2) be signed by each attorney/agent seeking to withdraw or clearly be signed on their behalf, and
(3) be *approved* at least thirty (30) days prior to the maximum extendable period for response to any outstanding Office Action, and
(4) indicate the address to which future correspondence should be mailed.

Petitioner has met all of the above. Accordingly, the request is **GRANTED**.

All of the attorneys/agents listed in the Request are granted the request for withdrawal, including those attorneys/agents associated with Customer Number 20,457. All other attorneys remain of record. Furthermore, the Patent Office does not recognize the withdrawal of a firm.

All future communications from the Office will be directed to the address listed below until otherwise notified by applicant. Applicant is reminded of the obligation to promptly notify the Patent and Trademark Office of any change in correspondence address to ensure receipt of all communications from the Office.

Kenneth Wieder
Special Program Examiner
Technology Center 2600
Communications
(703) 305-4710

cc: KENYON & KENYON
1500 K STREET, NW
SUITE 700
WASHINGTON, DC 20005-1257

UNITED STATES PATENT AND TRADEMARK OFFICE

COMMISSIONER FOR PATENTS
UNITED STATES PATENT AND TRADEMARK OFFICE
P.O. BOX 1450
ALEXANDRIA, VA 22313-1450
www.uspto.gov

DEC 02 2004

Ronald L. Grudziecki
Burns, Doane, Swecker & Mathis, L.L.P.
P.O. Box 1404
Alexandria, VA 22313-1404

Paper No. #19

In re Application of Anders Stenberg Serial No. : 09/879,151 Filed : June 13, 2001 For : Absorbent Article	: DECISION ON PETITION : TO WITHDRAW : HOLDING OF : ABANDONMENT

This is a decision on petitioner's request filed via facsimile transmission on September 1, 2004, to review the holding of abandonment mailed August 20, 2004 for failure to respond to the Office action mailed December 16, 2003. There is no fee required for this petition.

In support of the request, petitioner has submitted a copy of a response that was submitted via facsimile transmission on March 16, 2004. The response included a certificate of facsimile transmission dated March 16, 2004. Petitioner has also included a copy of a facsimile transmission report confirming transmission of the papers in question on March 16, 2004.

In view of the above, the Notice of Abandonment mailed August 20, 2004 is in error and is hereby vacated. The holding of abandonment is withdrawn. Upon the mailing of this decision, the application will be forwarded to the Examiner via the Legal Instruments Examiner for entry and consideration of the response filed March 16, 2004.

Summary: Holding of Abandonment Withdrawn.

John E. Kittle, Director
Groups 3730 and 3760
Phone: (703) 308-0873

ak/06/10/04

UNITED STATES PATENT AND TRADEMARK OFFICE

COMMISSIONER FOR PATENTS
UNITED STATES PATENT AND TRADEMARK OFFICE
P.O. BOX 1450
ALEXANDRIA, VA 22313-1450
www.uspto.gov

Paper No. 9

FLESHNER & KIM LLP
P.O. BOX 221200
CHANTILLY VA 20153

COPY MAILED

FEB 25 2004

OFFICE OF PETITIONS

In re Application of
Eun Cheol Lee et al
Application No. 09/879,170
Filed: June 13, 2001
Attorney Docket No. YHK-0066

: DECISION ON PETITION
: UNDER 37 CFR 1.78(a)(3)

This is a decision on the petition under 37 CFR 1.78(a)(3), filed July 23, 2003, to accept an unintentionally delayed claim under 35 U.S.C. § 120 for the benefit of priority to the prior-filed nonprovisional application set forth in the amendment filed concurrently with the instant petition.

The petition is **GRANTED**.

A petition for acceptance of a claim for late priority under 37 CFR 1.78(a)(3) is only applicable to those applications filed on or after November 29, 2000. Further, the petition is appropriate only after the expiration of the period specified in 37 CFR 1.78(a)(2)(ii). In addition, the petition under 37 CFR 1.78(a)(3) must be accompanied by:

> **(1)** the reference required by 35 U.S.C. § 120 and 37 CFR 1.78(a)(2)(i) of the prior-filed application, unless previously submitted;[1]
> **(2)** the surcharge set forth in § 1.17(t); and
> **(3)** a statement that the entire delay between the date the claim was due under 37 CFR 1.78(a)(2)(ii) and the date the claim was filed was unintentional. The Commissioner may require additional information where there is a question whether the delay was unintentional.

The instant pending application was filed on June 13, 2001, and was pending at the time of filing of the instant petition. A reference to the prior-filed nonprovisional application has been included in an amendment to the first sentence of the specification following the title, as required by 37 CFR 1.78(a)(2)(iii).

---

[1] Any nonprovisional application or international application designating the United States of America claiming the benefit of one or more prior-filed copending applications or international applications designating the United States of America must contain or be amended to contain a reference (amendment to the first line of the specification following the title or in an application data sheet (ADS) to each such prior-filed application, identifying it by application number (consisting of the series code and serial number) or international application number and international filing date filing date and indicating the relationship of the applications. Cross references to other related applications may be made when appropriate (*see* § 1.14).

The instant nonprovisional application was filed after November 29, 2000, and the claim herein for the benefit of priority to the prior-filed nonprovisional application is submitted after expiration of the period specified in 37 CFR 1.78(a)(2)(ii). Also, the reference to the prior-filed nonprovisional application was submitted during the pendency of the instant nonprovisional application, for which the claim for benefit of priority is sought. *See* 35 U.S.C. § 120. Accordingly, having found that the instant petition for acceptance of an unintentionally delayed claim for the benefit of priority under 35 U.S.C. § 120 to the prior-filed nonprovisional application satisfies the conditions of 37 CFR 1.78(a)(3), the petition is granted.

The granting of the petition to accept the delayed benefit claim to the prior-filed application under 37 CFR 1.78(a)(3) should not be construed as meaning that the instant application is entitled to the benefit of the prior-filed application. In order for the instant application to be entitled to the benefit of the prior-filed application, all other requirements under 35 U.S.C. § 120 and 37 CFR 1.78(a)(1) and (a)(2) must be met. Similarly, the fact that the corrected Filing Receipt accompanying this decision on petition includes the prior-filed application should not be construed as meaning that applicant is entitled to the claim for benefit of priority to the prior-filed application noted thereon. Accordingly, the examiner will, in due course, consider this benefit claim and determine whether the instant application is entitled to the benefit of the earlier filing date.

A corrected Filing Receipt, which includes the priority claim to the prior-filed nonprovisional application, accompanies this decision on petition.

Any inquiries concerning this decision may be directed to Karen Creasy at (703) 305-8859.

This application is being forwarded to Technology Center Art Unit 2674 for consideration by the examiner of applicant's entitlement to claim benefit of priority under 35 U.S.C. § 120 to prior-filed nonprovisional Application No. 09/440,094, filed November 15, 1999.

Frances Hicks

Frances Hicks
Lead Petitions Examiner
Office of Petitions
Office of the Deputy Commissioner
for Patent Examination Policy

ATTACHMENT: Corrected Filing Receipt

UNITED STATES PATENT AND TRADEMARK OFFICE

Commissioner for Patents
United States Patent and Trademark Office
P.O. Box 1450
Alexandria, VA 22313-1450
www.uspto.gov

MAILED
FROM DIRECTORS OFFICE

NOV 17 2004

TECHNOLOGY CENTER 3600

VENABLE, BAETJER, HOWARD & CIVILETTI, LLP
P.O. Box 34385
Washington DC 20043-9998

In re Application of
Kurt Ryf et al.
Application No. 09/879,187
Filed: June 13, 2001
Attorney Docket No.: 39021-172671
For: METHOD FOR PRODUCING A FUNCTIONAL HIGH-ENERGETIC MATERIAL

DECISION ON PETITION
UNDER 37 CFR §1.181

This is a decision on applicant's petition under 37 CFR 1.181 filed May 19, 2004 requesting withdrawal of the holding of abandonment of the Office action mailed May 6, 2004 and reconsideration of the response filed on November 21, 2003.

The petition is **GRANTED.**

The record reflects that on April 10, 2003 a non-final Office action was mailed restricting the claims and additionally including a rejection of the claims under 35 USC 112 2nd paragraph. On July 9, 2003 applicant filed an election and response to the paper of April 10, 2003. On July 31, 2003 a supplemental response was additionally filed. On October 21, 2004 a notice of non-responsive amendment was mailed. Applicant responded on November 21, 2003. On May 6, 2004 a letter of abandonment was mailed. The notice of abandonment included statements that the letter of November 21, 2003 remained non-responsive.

In the petition filed May 19, 2004, applicant argues the completeness of the response mailed on November 21, 2003. In particular, the examiner argues that the addition of the term "powder" to claim 17 revives an issue that was never addressed in the original 35 USC 112-2nd rejections. A review of the claims originally submitted as well as claim 17 as now presented indicates that this term is used in a different context in the claim. Therefore, it is reasonable to interpret this claim in a different light and assume that the original rejection would not specifically address claim 17 as now written. Therefore, the response filed on November 21, 2003 is deemed adequate.

The petition is **GRANTED.**

The holding of abandonment is hereby withdrawn. Upon the mailing of this petition the application will be forwarded to the Supervisory Legal Instruments Examiner for the withdrawal of the abandonment. The application will then be forwarded to the examiner for consideration of the amendments filed November 21, 2003 and January 28, 2004.

Donald T. Hajec, Director
Patent Technology Center 3600
Telephone No.: (703) 306-4180

Mc/sm: 10/26/04
SM

UNITED STATES PATENT AND TRADEMARK OFFICE

COMMISSIONER FOR PATENTS
UNITED STATES PATENT AND TRADEMARK OFFICE
P.O. BOX 1450
ALEXANDRIA, VA 22313-1450
WWW.USPTO.GOV

Paper No. None

Lockheed Martin Corporation
NE&SS-Tactical Systems
3333 Pilot Knob Road
Eagan MN 55121

COPY MAILED

AUG 0 5 2004

OFFICE OF PETITIONS

In re Application of :
Michael A. Kouritzin et al. :
Application No. 09/879,210 :
Filed: June 13, 2001 :
Attorney Docket No.: EA-00095 :
Title: FLEXIBLE EFFICIENT BRANCHING :
PARTICLE TRACKING ALGORITHMS :

DECISION ON PETITION
UNDER 37 C.F.R. §1.137(b)

This is a decision on the petition filed May 13, 2004, pursuant to 37 C.F.R. §1.137(b)[1], to revive the above-identified application.

The above-identified application became abandoned for failure to reply within the meaning of 37 CFR §1.113 in a timely manner to the final Office action mailed September 30, 2003, which set a shortened statutory period for reply of three (3) months. On March 5, 2004, an after-final amendment was received, along with a two-month extension of time. On March 25, 2004, an advisory action was mailed, as the submission failed to place the application in condition for allowance. A Notice of Abandonment was mailed to counsel on May 17, 2004.

With the petition, Petitioner has submitted a Request for Continued Examination (RCE) as well as the associated fee, an amendment, the petition fee, and the proper statement of unintentional delay.

1 A grantable petition pursuant to 37 CFR 1.137(b) must be accompanied by:

(1) The reply required to the outstanding Office action or notice, unless previously filed;
(2) The petition fee as set forth in § 1.17(m);
(3) A statement that the entire delay in filing the required reply from the due date for the reply until the filing of a grantable petition pursuant to this paragraph was unintentional. The Commissioner may require additional information where there is a question whether the delay was unintentional, and;
(4) Any terminal disclaimer (and fee as set forth in § 1.20(d)) required pursuant to paragraph (d) of this section.

With the instant petition, Petitioner has filed a Request for Continued Examination (RCE) under 37 C.F.R. §1.114, including a request for consideration of a concurrently submitted amendment and payment of the RCE fee. The RCE has been accepted as the required reply under 37 C.F.R. §1.137(b)(1). Having made the proper statement of unintentional delay and having submitted the petition fee, Petitioner has met all other requirements for a grantable petition under 37 C.F.R. §1.137(b).

The application file is being forwarded to Technology Center 2800 for consideration of the submission under 37 C.F.R. §1.114, the amendment filed concurrently with this petition on May 13, 2004.

Telephone inquiries regarding *this decision* should be directed to the undersigned at (703) 305-0011. Please note that on approximately September 28, 2004, the Office of Petitions will relocate to the new PTO location in Alexandria. Although the mailing address will remain the same, the general phone number for the Office of Petitions which should be used for status requests will change to 571-272-3282, and the telephone number for the undersigned will change to 571-272-3225.

Paul Shanoski
Senior Attorney
Office of Petitions
United States Patent and Trademark Office

UNITED STATES PATENT AND TRADEMARK OFFICE

COMMISSIONER FOR PATENTS
UNITED STATES PATENT AND TRADEMARK OFFICE
P.O. BOX 1450
ALEXANDRIA, VA 22313-1450
WWW.USPTO.GOV

Paper No. 11

Barry S. Newberger
5400 Renaissance Tower
1201 Elm Street
Dallas TX 75270

COPY MAILED

OCT 14 2003

OFFICE OF PETITIONS

In re Application of
Daniel Mann and Andrew Cohen
Application No. 09/879,256
Filed: June 11, 2001
Attorney Docket No. TT4244
Title: APPARATUS FOR DELIVERY OF MULTIPLE MEDIA DATA STREAMS, AND METHOD THEREFOR

DECISION ON PETITION
UNDER 37 C.F.R. §1.137(f)

This is a decision on the petition filed on August 18, 2003, pursuant to 37 C.F.R. §1.137(f), to revive the above-identified application.

A grantable petition pursuant to 37 CFR 1.137(f) must be accompanied by:

(1) Notification of the filing of an application in a foreign country or under a multinational treaty that requires 18 month publication[1];
(2) The petition fee as set forth in 37 C.F.R. § 1.17(m), and;
(3) A statement that the entire delay in filing the notice from the date that the notice was due under 35 U.S.C. §122(b)(2)(B)(iii) until the date the notice was filed was unintentional. The Commissioner may require additional information where there is a question whether the delay was unintentional.

Petitioner states that the instant nonprovisional application is the subject of a foreign or international application that was filed on March 21, 2002. However, the United States Patent and Trademark Office was unintentionally not notified of this filing within 45 days subsequent to the filing of the subject application in either a foreign or an international application.

In view of the above, this application became abandoned pursuant to 35 U.S.C. §1.22(b)(2)(B)(iii) and 37 C.F.R. §1.213(c) for failure to timely notify the Office of the filing of either a foreign application or an application under a multilateral international agreement that requires publication of applications 18 months after filing.

1 See PTO/SB/36 and paragraph on PTO/SB/64a for further information. Both may be downloaded at http://www.uspto.gov/web/forms/index.html.

The petition is **GRANTED-IN-PART**.

Concerning the petition under 37 C.F.R. §1.137(f), the petition is **GRANTED**.

37 C.F.R. §1.137(f) requires a statement that the entire delay in filing the notice from the date that the notice was due under 35 U.S.C. §122(b)(2)(B)(iii) until the date the notice was filed was unintentional. Since the statement contained in the instant petition varies from the language required by 37 C.F.R. §1.137(f), the statement contained in the instant petition is being construed as the statement required by 37 C.F.R. §1.137(f) and petitioner must notify the Office if this is not a correct interpretation of the statement contained in the instant petition.

Petitioner has submitted the notification of a foreign or international filing, paid the petition fee, and has made a statement which is being construed as the proper statement of unintentional delay.

The instant petition has been found to be in compliance with 37 C.F.R. §1.137(f). Accordingly, the failure to timely notify the Office of a foreign or international filing within 45 days after the date of filing of such foreign or international application as provided by 35 U.S.C. §122(b)(2)(B)(iii) and 37 C.F.R. §1.213(c) is accepted as having been unintentionally delayed.

The portion of the petition which request that the petition fee be waived is **DISMISSED**, as the payment of the required petition fee is a statutory prerequisite to the filing of a petition to revive under 37 C.F.R. §1.137, and cannot be waived. See M.P.E.P. 711.03(c)(III)(B)[2]

It is noted that the address listed on the petition differs from the address of record. The application file does not indicate a change of correspondence address has been filed in this case, although the address given on the petition differs from the address of record. If petitioner desires to receive future correspondence regarding this application, the change of correspondence address must be submitted. A courtesy copy of this decision will be mailed to petitioner. However, all future correspondence will be directed to the address of record until such time as appropriate instructions are received to the contrary. Petitioner will not receive future correspondence related to maintenance fees unless a Change of Correspondence Address Form (PTO/SB/122) is submitted for the above-identified application. A blank Change of Correspondence Address Form (PTO/SB/122) may be found at http://www.uspto.gov/web/forms/sb0122.pdf.

After this decision is mailed, the application will be forwarded to Technology Center 2600 for further processing.

---

2 "...[T]he payment of a petition fee to obtain the revival of an abandoned application is a statutory prerequisite to revival of the abandoned application and cannot be waived. In addition, the phrase '[o]n filing' in 35 U.S.C. §41(a)(7) means that the petition fee is required for the filing (and not merely the grant) of a petition under 37 C.F.R. §1.137. See H.R. Rep. No. 542, 97th Cong., 2nd Sess. 6 (1082), *reprinted in* 1982 U.S.C.C.A.N. 770 ('[t]he fees set forth in this section are due on filing the petition'). Therefore, the Office: (A) will not refund the petition fee required by 37 CFR 1.17(l) or 1.17(m), regardless of whether the petition under 37 CFR 1.137 is dismissed or denied."

Telephone inquiries concerning *this decision* should be directed to the undersigned at (703) 305-0011.

Paul Shanoski
Attorney
Office of Petitions
United States Patent and Trademark Office

cc: Winstead Sechrest & Minick P.C.
P.O. Box 50784
1201 Main Street
Dallas, Texas 75250-0784

UNITED STATES PATENT AND TRADEMARK OFFICE

COMMISSIONER FOR PATENTS
UNITED STATES PATENT AND TRADEMARK OFFICE
WASHINGTON, D.C. 20231
www.uspto.gov

Paper 4

Intellectual Property Department
BASF Corporation
3000 Continental Drive-North
Mount Olive NJ 07828-1234

COPY MAILED

MAR 1 9 2002

OFFICE OF PETITIONS

In re Application of
Waldemar Pfrengle
Application No. 09/879,258
Filed: June 12, 2001
For: FUNGICIDAL
TRIAZOLOPYRIMID-7-YLIDENEAMINES

Decision Refusing Status
UNDER 37 C.F.R. §1.47(b)

This is in response to the petition filed January 10, 2002 (certificate of mail date)[1], to accord 37 CFR 1.47(b) status to the present application.

The petition under 37 CFR 1.47(b) is dismissed.

Rule 47 applicant is given **TWO MONTHS** from the mailing date of this decision to reply, correcting the below-noted deficiencies. Any reply should be entitled "Request for Reconsideration of Petition Under 37 C.F.R. §1.47(b)," and should only address the deficiencies noted below, except that the reply may include an oath or declaration executed by the non-signing inventor. Extensions of time under §1.136 are available. **Failure to respond will result in abandonment of the application**.

On August 10,2001, a Notice to File Missing Parts was mailed requiring the submission of a properly signed oath or declaration in compliance with 37 CFR 1.63. In response to the Notice, on January 10, 2002, a petition under 37 CFR 1.47 (b) was filed.

The petition filed January 10, 2002, states that status under §1.47(b) is proper because a letter dated August 20, 2001 was sent to the inventor, Waldemar Pfrengle at his last known address, that the documents were received by a Mrs. Pfrengle and that since the inventor has received the application documents and hasn't responded that he refuses to sign the declaration. In support thereof, applicants submitted *inter alia* copies of a transmittal letter from a person named Matthias, an August 20, 2001 letter to inventor Pfrengle in German, a postcard receipt in German, a statement jointly signed by Drs. Meyer and Koster of BASF Aktiengesellschaft, and a declaration of facts by patent attorney Charles Costello.

A grantable petition under 37 CFR 1.47(b) requires: (1) proof that the non-signing inventor cannot be reached or refuses to sign the oath or declaration; (2) an acceptable oath or declaration; (3) the petition fee; (4) a statement of the last known address of the non-signing inventor; (5) proof of proprietary interest; and (6) proof of irreparable damage. Applicant lacks item (1), (2), (5) and (6) set forth above.

As to item (1), Petitioner should show that a copy of the application papers was presented to the inventor, but that he did not respond to the request that he sign the oath/declaration in order to show that the inventor has refused to join in the application. Petitioner has provided a copy of a post card receipt (in German) signed by someone and claims that the signature is that of a Mrs. Pfrengle. The signature is not legible and therein the proof submitted is not conclusive evidence that Waldemar Pfrengle has been presented with the application documents. See Manual of Patent Examining Procedure, Section 409.03(d). The proof of the pertinent events should be made by a statement of someone with first hand knowledge of the events. The circumstances of the presentation of the application papers and of the refusal must be specified in a statement of facts by the person who presented the inventor with the application papers and/or to whom the refusal was made. Statements by a party not present when an oral refusal is made will not be accepted. If an employee of BASF Aktiengesellschaft prepares and presents the papers to inventor Pfrengle, then their declaration of facts should be submitted on renewed petition.

Additionally, the post card receipt is not dated and thus because it is in a language other than English, it can't be determined that the application documents were a part of a mailing to the inventor at the last known address.

---

[1]The instant petition was made timely by an accompanying petition for a three-month extension of time.

Furthermore, exhibit 2 which purports to be the application papers mailed to the last known address of inventor Waldemar Pfrengle is in a language other than English but the Declaration provided is in English. If it is that Mr. Pfrengle understands English, the application should be presented to him in English or else the USPTO won't be able to determine if in fact the papers presented are in fact what petitioner alleges them to be.

While Exhibits 3 and 4 appear to be a translation of the words "Patent Application" it still can't be determined what if anything was sent to Mr. Pfrengle. As well, petitioner should be reminded of the provisions of 37 CFR 1.69, which provide that:

> (a) Whenever an individual making an oath or declaration cannot understand English, the oath or declaration must be in a language that such individual can understand and shall state that such individual understands the content of any documents to which the oath or declaration relates.
>
> (b) Unless the text of any oath or declaration in a language other than English is a form provided or approved by the Patent and Trademark Office, it must be accompanied by an English translation together with a statement that the translation is accurate, except that in the case of an oath or declaration filed under § 1.63, the translation may be filed in the Office no later than two months from the date applicant is notified to file the translation.

As to item (2), An oath or declaration for the patent application in compliance with 37 CFR 1.63 and 1.64 still has not been presented as an oath or declaration in compliance with 37 CFR 1.63 and 1.64 signed by the Rule 1.47 applicant on behalf of Mr. Pfrengle is required. The declaration provided is blank. See MPEP 409.03(b).

As to item (5), Petitioner has failed to show or provide proof that Drs. Meyer and Koster or Matthias for that matter, has sufficient proprietary interest, on behalf of BASF, in the subject matter to justify the filing of the application (see MPEP 409.03(f)). Acceptable proof would include a copy of the employment agreement between the non-signing inventor and the Rule 47(b) applicant (company), a copy of an assignment agreement showing that the invention disclosed in the application is assigned to the Rule 47(b) applicant, or a legal memorandum signed by an attorney familiar with the law of the jurisdiction stating that a court of competent jurisdiction would by the weight of authority in that jurisdiction award the title of the invention to the Rule 47(b) applicant;

As to item (6), Rule 47 applicant failed to provide proof of irreparable damage (see MPEP 409.03(g)). A statement by Rule 47 applicant that the filing is necessary to preserve the rights of the parties would be sufficient.

Further correspondence with respect to this matter should be addressed as follows:

By mail:	Assistant Commissioner for Patents Box DAC Washington, D.C. 20231
By FAX:	(703) 308-6916 Attn: Office of Petitions
By hand:	Crystal Plaza Four, Suite 3C23 2201 S. Clark Place Arlington, VA 22202

Telephone inquiries related to this decision should be directed to the undersigned Petitions Attorney at 703-305-4497.

Patricia Faison-Ball

Patricia Faison-Ball
Petitions Attorney
Office of Petitions
Office of the Deputy Commissioner
for Patent Examination Policy

UNITED STATES PATENT AND TRADEMARK OFFICE

COMMISSIONER FOR PATENTS
UNITED STATES PATENT AND TRADEMARK OFFICE
WASHINGTON, D.C. 20231
www.uspto.gov

Paper No. 9

COPY MAILED

AUG 2 8 2002

OFFICE OF PETITIONS

KEIL & WEINKAUF
1350 CONNECTICUT AVENUE, N.W.
WASHINGTON, DC 20036

In re Application of
Waldemar Pfrengle
Application No. 09/879,258
Filed: June 12, 2001
Attorney Docket No. AM100186-00

: DECISION ACCORDING STATUS
: UNDER 37 CFR 1.47(b)

This is in response to the renewed petition filed under 37 CFR 1.47(b) on June 10, 2002.

The petition is granted.

Petitioner has shown that the non-signing inventor has refused to join in the filing of the above-identified application after having been presented with the application papers. Specifically, the declaration of Tanja Bortt establishes that a copy of the application was sent to the non-signing inventor. However, while the application papers were received, the inventor has not returned an executed declaration. In addition, petitioners have shown that BASF Aktiengesellschaft has a proprietary interest in the above-identified application by presenting a copy of an assignment by the inventor of his entire right, title, and interest in the invention to American Cyanamid Company[1]. Petitioner has submitted a declaration in compliance with 37 CFR 1.63, 1.64, and 1.175 and has demonstrated that such action is necessary to prevent irreparable damage.

This application and papers have been reviewed and found in compliance with 37 CFR 1.47(b). This application is hereby accorded Rule 1.47(b) status.

As provided in Rule 1.47(c), this Office will forward notice of this application's filing to the non-signing inventor. Notice of the filing of this application will also be published in the Official Gazette.

The application file is being forwarded to the Office of Initial Patent Examination for further processing.

Telephone inquiries related to this decision should be directed to the undersigned Petitions Attorney at (703) 305-4497.

Patricia Faison-Ball
Senior Petitions Attorney
Office of Petitions
Office of the Deputy Commissioner
for Patent Examination Policy

[1]Petitioner provides evidence of a subsequent assignment from American Cyanamid Company to BASF Aktiengesellschaft.

UNITED STATES PATENT AND TRADEMARK OFFICE

Commissioner for Patents
United States Patent and Trademark Office
P.O. Box 1450
Alexandria, VA 22313-1450
www.uspto.gov

DAWN JANELLE AT
BIOMEASURE INC.
27 MAPLE STREET
MILFORD, MA 01757

COPY MAILED

MAY 2 0 2004

OFFICE OF PETITIONS

ON PETITION

In re Application of	:
Katy Drieu	:
Application No. 09/879,306	:
Filed: June 12, 2001	:
Attorney Docket No. 00537/168002	:

This is a decision on the petition under 37 CFR 1.137(b), filed March 18, 2004, to revive the above-identified application.

The petition is **GRANTED**.

This application became abandoned for failure to timely reply to the final Office action mailed December 19, 2002. Accordingly, this application became abandoned on March 20, 2003.

The file is being forwarded to Technology Center 1600 for precessing of the RCE, filed March 17, 2003.

Telephone inquiries concerning this matter may be directed to the undersigned at (703) 306-9200.

Edward J. Tannouse
Petitions Attorney
Office of Petitions
United States Patent and Trademark Office

PTO/SB/64 (11-03)
Approved for use through 07/31/2006. OMB 0651-0031
U.S. Patent and Trademark Office; U.S. DEPARTMENT OF COMMERCE
Under the Paperwork Reduction Act of 1995, no persons are required to respond to a collection of information unless it displays a valid OMB control number.

PETITION FOR REVIVAL OF AN APPLICATION FOR PATENT ABANDONED UNINTENTIONALLY UNDER 37 CFR 1.137(b)

Docket Number (Optional) 00587-168002 (018B)

First named inventor: DRIEU, Katy

Application No.: 09/879,306 Art Unit: 1614

Filed: 06/12/2001 Examiner: JARVIS, William R. A.

Title: Ginkgolides for Inhibition of Membrane Expression of Benzodiazepine Receptors

Attention: Office of Petitions
Mail Stop Petition
Commissioner for Patents
P.O. Box 1450
Alexandria, VA 22313-1450
FAX: (703) 308-6916

NOTE: If information or assistance is needed in completing this form, please contact Petitions Information at (703) 305-9282.

The above-identified application became abandoned for failure to file a timely and proper reply to a notice or action by the United States Patent and Trademark Office. The date of abandonment is the day after the expiration date of the period set for reply in the Office notice or action plus an extensions of time actually obtained.

APPLICANT HEREBY PETITIONS FOR REVIVAL OF THIS APPLICATION

NOTE: A grantable petition requires the following items:
(1) Petition fee;
(2) Reply and/or issue fee;
(3) Terminal disclaimer with disclaimer fee –required for all utility and plant applications filed before June 8, 1995; and for all design applications; and
(4) Statement that the entire delay was unintentional.

1. Petition fee
☐ Small entity-fee $_____ (37 CFR 1.17(m)). Applicant claims small entity status. See 37 CFR 1.27.

☑ Other than small entity - fee $ 1330.00 (37 CFR 1.17(m))

2. Reply and/or fee
A. The reply and/or fee to the above-noted Office action in the form of Request for Continued Examination under 37 CFR 1.114 (identify type of reply):
☐ has been filed previously on _____.
☑ is enclosed herewith.
B. The issue fee and publication fee (if required) of $_____.
☐ has been paid previously on _____.
☐ is enclosed herewith.

This collection of information is required by 37 CFR 1.137. The information is required to obtain or retain a benefit by the public which is to file (and by the USPTO to process) an application. Confidentiality is governed by 35 U.S.C. 122 and 37 CFR 1.14. This collection is estimated to take 1.0 hour to complete, including gathering, preparing, and submitting the completed application form to the USPTO. Time will vary depending upon the individual case. Any comments on the amount of time you require to complete this form and/or suggestions for reducing this burden, should be sent to the Chief Information Officer, U.S. Patent and Trademark Office, U.S. Department of Commerce, P.O. 1450, Alexandria, VA 22313-1450. DO NOT SEND FEES OR COMPLETED FORMS TO THIS ADDRESS. SEND TO: **Mail Stop Petition, Commissioner for Patents, P.O. Box 1450, Alexandria, VA 22313-1450.**

If you need assistance in completing the form, call 1-800-PTO-9199 and select option 2.

PTO/SB/64 (08-03)
Approved for use 07/31/2006. OMB 0651-0031
U.S. Patent and Trademark Office; U.S. DEPARTMENT OF COMMERCE
Under the Paperwork Reduction Act of 1995, no persons are required to respond to a collection of information unless it displays a valid OMB control number.

3. Terminal disclaimer with disclaimer fee

☐ Since this utility/plant application was filed on or after June 8, 1995, no terminal disclaimer is required.

☐ A terminal disclaimer (and disclaimer fee (37 CFR 1.20(d)) of $ _____ for a small entity or $ _____ for other than a small entity) disclaiming the required period of time is enclosed herewith (see PTO/SB/63).

4. STATEMENT: The entire delay in filing the required reply from the due date for the required reply until the filing of a grantable petition under 37 CFR 1.137(b) was unintentional. [NOTE. The United States Patent and Trademark Office may require additional information if there is a question as to whether either the abandonment or the delay in filing a petition under 37 CFR 1.137(b) was unintentional (MPEP 711.03(c), subsections (III)(C) and (D))].

WARNING: Information on this form may become public. Credit card information should not be included on this form. Provide credit card information and authorization on PTO-2038.

3-18-2004
Date

Signature

Telephone Number: 508-478-0144

Alan F. Feeney, Reg. No. 43, 609
Typed or printed name

Biomeasure, Incorporated, 27 Maple Street
Address

Milford, MA 01757-3650
Address

Enclosures:
☐ Fee Payment
☑ Reply
☐ Terminal Disclaimer Form
☐ Additional sheets containing statements establishing unintentional delay
☐ Other: _____

CERTIFICATE OF MAILING OR TRANSMISSION [37 CFR 1.8(a)]

I hereby certify that this correspondence is being:

☐ deposited with the United States Postal Service on the date shown below with sufficient postage as first class mail in an envelope addressed to: **Mail Stop Petition**, Commissioner for Patents, P.O. Box 1450, Alexandria, VA 22313-1450.

☑ transmitted by facsimile on the date shown below to the United States Patent and Trademark Office at (703) 308-6916.

3/18/2004
Date

Signature

Dawn M. Janelle
Type or printed name of person signing certificate

UNITED STATES PATENT AND TRADEMARK OFFICE

COMMISSIONER FOR PATENTS
UNITED STATES PATENT AND TRADEMARK OFFICE
P.O. BOX 1450
ALEXANDRIA, VA 22313-1450
www.uspto.gov

#15

DARBY & DARBY P.C.
P. O. BOX 5257
NEW YORK, NY 10150-5257

COPY MAILED

FEB 0 5 2004

OFFICE OF PETITIONS

In re Application of
William T. Donofrio, et al.
Application No. 09/879,319
Filed: June 11, 2001
Attorney Docket No. 2640/1G819US1

ON PETITION

This is a decision on the petition under 37 CFR 1.313(c)(2), filed January 30, 2004, to withdraw the above-identified application from issue after payment of the issue fee.

The petition is **GRANTED**.

The above-identified application is withdrawn from issue for consideration of a submission under 37 CFR 1.114 (request for continued examination). See 37 CFR 1.313(c)(2).

Petitioner is advised that the issue fee paid on January 20, 2004, in the above-identified application cannot be refunded. If, however, the above-identified application is again allowed, petitioner may request that it be applied towards the issue fee required by the new Notice of Allowance. [1]

Telephone inquiries relating to this decision should be directed to the undersigned at (703) 305-9220.

After the application is received in the Office of Petitions, the file will be forwarded to Technology Center AU 3731 for further processing of the request for continued examination under 37 CFR 1.114.

Sherry D. Brinkley
Petitions Examiner
Office of Petitions
Office of the Deputy Commissioner
for Patent Examination Policy

[1] The request to apply the issue fee to the new Notice may be satisfied by completing and returning the new Issue Fee Transmittal Form PTOL-85(b), which includes the following language thereon: "Commissioner for Patents is requested to apply the Issue Fee and Publication Fee (if any) or re-apply any previously paid issue fee to the application identified above." Petitioner is advised that, whether a fee is indicated as being due or not, the Issue Fee Transmittal Form must be completed and timely submitted to avoid abandonment. Note the language in bold text on the first page of the Notice of Allowance and Fee(s) Due (PTOL-85).

UNITED STATES PATENT AND TRADEMARK OFFICE

Commissioner for Patents
United States Patent and Trademark Office
Washington, D.C. 20231
www.uspto.gov

Paper No. 6

Dan Cleveland, Jr.
Lathrop & Gage
4845 Pearl East Circle, Suite 300
Boulder, CO 80301

COPY MAILED
APR 1 6 2003
OFFICE OF PETITIONS

In re Application of
Ethan R. Signer
Application No. 09/879,329
Filed: June 12, 2001
Attorney Docket No. 408445

ON PETITION

This is a decision on the petition under 37 CFR 1.137(b), filed February 28, 2003, to revive the above-identified application.

The petition is **GRANTED**.

The above-identified application became abandoned for failure to reply in a timely manner to the Notice to File Missing Parts of Application (Notice) mailed August 30, 2001. The Notice set a period for reply of two (2) months from the mail date of the Notice. No extensions of time under the provisions of 37 CFR 1.136(a) were obtained. Accordingly, the above-identified application became abandoned on November 31, 2001.

Telephone inquiries concerning this decision should be directed to Latrice Bond at (703) 308-6911.

The application file is being forwarded to the Office of Initial Patent Examination for further processing.

Latrice Bond

Latrice Bond
Paralegal Specialist
Office of Petitions
Office of the Deputy Commissioner
for Patent Examination Policy

SPE RESPONSE FOR CERTIFICATE OF CORRECTION

Paper No.: _____

DATE : 10/31/06

TO SPE OF : ART UNIT 2813

SUBJECT : Request for Certificate of Correction for Appl. No.: 09/874335 Patent No.: 6911371

Please respond to this request for a certificate of correction within 7 days.

Please review the requested changes/corrections as shown in the **COCIN** document(s) in the IFW application image. No new matter should be introduced, nor should the scope or meaning of the claims be changed.

Please complete the response (see below) and forward the completed response to scanning using document code **COCX**.

HENRY RANDALL
Certificates of Correction Branch
703-308-9390 ext.

Thank You For Your Assistance

The request for issuing the above-identified correction(s) is hereby:
Note your decision on the appropriate box.

- ☒ **Approved** — All changes apply.
- ☐ **Approved in Part** — Specify below which changes **do not** apply.
- ☐ **Denied** — State the reasons for denial below.

Comments: _____

Carl Whitehead

CARL WHITEHEAD, JR.
SUPERVISORY PATENT EXAMINER
TECHNOLOGY CENTER 2800
SPE

2813
Art Unit

UNITED STATES PATENT AND TRADEMARK OFFICE

COMMISSIONER FOR PATENTS
UNITED STATES PATENT AND TRADEMARK OFFICE
P.O. BOX 1450
ALEXANDRIA, VA 22313-1450
www.uspto.gov

MARGER JOHNSON & MCCOLLOM/INDIVOS
210 SW MORRISON STREET
SUITE 400
PORTLAND, OR 97204

COPY MAILED

AUG 14 2006

OFFICE OF PETITIONS

In re Patent No. of 6,662,166 :
Issued: December 9, 2003 :
Application No. 09/879,370 :
Filed: June 11, 2001 :
Attorney Docket No. 8514-61 :

NOTICE

This is in response to the paper filed March 21, 2006 under 37 CFR 1.28(g)(2) requesting that status as a Small Entity be removed.

In accordance with the request, status as a Small Entity has been removed.

ALESIA M. BROWN
Petitions Attorney
Office of Petitions

UNITED STATES PATENT AND TRADEMARK OFFICE

Commissioner for Patents
United States Patent and Trademark Office
Washington, D.C. 20231
www.uspto.gov

Paper No. 6

ALSTON & BIRD LLP
BANK OF AMERICA PLAZA
101 SOUTH TRYON STREET
SUITE 4000
CHARLOTTE NC 28280-4000

COPY MAILED

MAY 0 3 2002

OFFICE OF PETITIONS

In re Application of
Richard Raymond May
Application No. 09/879,372
Filed: June 11, 2001
Attorney Docket No. 38866/235737
Title: SYSTEMS AND METHODS FOR REVERSE AUCTION OF FINANCIAL INSTRUMENTS

DECISION ACCORDING STATUS UNDER 37 CFR 1.47(b)

This is in response to the "Statement of Facts in Support of Filing on Behalf on Nonsigning Inventors (37 CFR 1.47)", filed February 1, 2002, which is being treated as a petition under 37 CFR 1.47(b).

The petition under 37 CFR 1.47(b) is **GRANTED**.

The above-identified application was filed on June 11, 2001. On August 15, 2001, applicant was mailed a "Notice to File Missing Parts of Nonprovisional Application - Filing Date Granted," requiring, *inter alia*, an executed oath or declaration and a surcharge for its late filing. This Notice set a two-month period for reply.

In reply, applicant filed the instant petition (and fee) and paid the surcharge for late filing of the declaration. To make timely this reply, applicant obtained a three-month extension of time and included a Certificate of Mailing dated January 15, 2002.

A grantable petition under 37 CFR 1.47(b) requires: (1) proof that all of the inventors cannot be reached or refuse to sign the oath or declaration after having been presented with the application papers (specification, claims, drawings, oath or declaration); (2) an acceptable oath or declaration in compliance with 37 CFR 1.63; (3) a showing that such action is necessary to preserve the rights of the parties or to prevent irreparable damage; (4) the petition fee; (4) a statement of the last known address of the non-signing inventor; and (5) proof that the Rule 47(b) applicant has sufficient proprietary interest in the subject matter to justify the filing of the application.

On petition, Attorney William R. Silverio has included a statement of facts from Chip Biggers, Vice President of Business Development and General Legal Counsel for Blackbird Holdings,

Inc. Biggers detailed how on two occasions the application papers were sent to the last known address of inventor May for his review and signature. However, according to Biggers, no response from May has been received.

The petition and the declaration filed on February 1, 2002 have been reviewed and found to be in compliance with 37 CFR 1.47(b).

This application is hereby accorded Rule 1.47(b) status.

As provided in Rule 1.47(c), this Office will forward notice of this application's filing to the non-signing inventor at the address given in the petition. Notice of the filing of this application will also be published in the Official Gazette.

The petition fee of $130 has been charged to Deposit Account No. 16-0605, as authorized.

The application file is being forwarded to Technology Center 2100 for examination.

Telephone inquiries regarding this decision should be directed to Petitions Attorney Cliff Congo at (703) 305-0272.

for D Wood

Beverly M. Flanagan
Supervisory Petitions Examiner
Office of Petitions
Office of the Deputy Commissioner
for Patent Examination Policy

UNITED STATES PATENT AND TRADEMARK OFFICE

Commissioner for Patents
United States Patent and Trademark Office
Washington, D.C. 20231
www.uspto.gov

RICHARD RAYMOND RAY
1526 REVERDY OAKS DRIVE
MATTHEWS NC 28105

COPY MAILED

MAY 0 3 2002

OFFICE OF PETITIONS

In re Application of :
Richard Raymond Ray :
Application No. 09/879,372 :
Filed: June 11, 2001 : LETTER
Title: SYSTEMS AND METHODS FOR :
REVERSE AUCTION OF FINANCIAL :
INSTRUMENTS

Dear Mr. Ray:

You are named as the inventor in the above-identified United States patent application filed under the provisions of 35 U.S.C. 116 (United States Code) and 37 CFR 1.47(b), Rules of Practice in Patent Cases. Should a patent be granted on the application you will be designated therein as the inventor.

As the named inventor you are entitled to inspect any paper in the file wrapper of the application, order copies of all or any part thereof (at a prepaid cost per 37 CFR 1.19) or make your position of record in the application. Alternatively, you may arrange to do any of the preceding through a registered patent attorney or agent presenting written authorization from you. If you care to join the application, agent of record (see below) would presumably assist you. Joining in the application would entail the filing of an appropriate oath or declaration by you pursuant to 37 CFR 1.63.

Telephone inquiries regarding this communication should be directed to Petitions Attorney Cliff Congo at (703) 305-0272. Requests for information regarding your application should be directed to the File Information Unit at (703) 308-2733. Information regarding how to pay for and order a copy of the application, or a specific paper in the application, should be directed to the Certification Division at (703) 308-9726 or 1-800-972-6382 (outside the Washington D.C. area).

for D Wood
Beverly M. Flanagan
Supervisory Petitions Examiner
Office of Petitions
Office of the Deputy Commissioner
for Patent Examination Policy

William R Silverio
Alston & Bird LLP
Bank of America Plaza
101 South Tryon Street, Suite 4000
Charlotte, NC 28280-4000

UNITED STATES PATENT AND TRADEMARK OFFICE

Commissioner for Patents
United States Patent and Trademark Office
P.O. Box 1450
Alexandria, VA 22313-1450
www.uspto.gov

Walter W. Karnstein
520 S.W. Yamhill Street,
Suite 200
Portland, Oregon 97204

MAILED

APR 17 2008

Technology Center 2100

In re Application of:
William Hertling et al.
Application No. 09/879399
Filed: June 11, 2001
For: RUNTIME UPDATING OF VIRTUAL MACHINE CLASS FILES

SUA SPONTE

WITHDRAWAL OF HOLDING OF ABANDONMENT

A review of the application reveals that a Notice of Abandonment was mailed to the applicant on February 26, 2008. The notice indicated that the instant application was being held abandoned for failure to respond to the decision by the Board of Patent Appeals and Interferences issued on December 7, 2007. However, this decision reversed the examiner's rejection of claims 1-22 under 35 USC 102(b). Thus, no response was required by Appellant.

In view of these facts, the abandonment of the application was clearly in error and is hereby **VACATED**.

The application is being forwarded to the Supervisory Legal Instruments Examiner with instructions to **WITHDRAW** the holding of abandonment. The application will then be forward to the examiner for issuance of an action consistent with the decision by the Board of Patent Appeals and Interferences.

Any inquiry concerning this decision should be directed to the undersigned whose telephone number is (571) 272-3591.

/Gail O. Hayes/

Gail O. Hayes
Special Program Examiner/Quality Assurance Specialist
Technology Center 2100
Computer Architecture, Software, and
Information Security

UNITED STATES PATENT AND TRADEMARK OFFICE

Commissioner for Patents
United States Patent and Trademark Office
P.O. Box 1450
Alexandria, VA 22313-1450
www.uspto.gov

PEARSON & PEARSON, LLP
10 GEORGIA STREET
LOWELL MA 01852

COPY MAILED

FEB 07 2005

OFFICE OF PETITIONS

In re Application of :
Sugiura et al. :
Application No. 09/879,405 :
Filed: June 12, 2001 :
Attorney Docket No. 32759 :

ON PETITION

This is a decision on the petition under 37 CFR 1.137(b), filed January 10, 2005, to revive the above-identified application.

The petition is **GRANTED**.

This application became abandoned for failure to reply timely to the Notice of Non-Compliant Amendment mailed May 15, 2004, which set a one-month extendable period to respond. No extensions of time were obtained pursuant to 37 CFR 1.136(a). Accordingly, this application became abandoned on June 16, 2004. A Notice of Abandonment was mailed on November 17, 2004.

The petitioner has met the requirements to revive the above-identified application pursuant to 37 CFR 1.137(b). Petitioner submitted the required reply, paid the petition fee, and made the proper statement of unintentional delay.

The matter is being referred to Technology Center Art Unit 2832.

Telephone inquiries concerning this matter may be directed to the undersigned at (571) 272-3211.

Christina Tartera Donnell

Christina Tartera Donnell
Senior Petitions Attorney
Office of Petitions

UNITED STATES PATENT AND TRADEMARK OFFICE

Under Secretary of Commerce for Intellectual Property and
Director of the United States Patent and Trademark Office
Washington, D.C. 20231
www.uspto.gov

Paper No.

ATTENTION OF DAVID G. SCHMALTZ
MERCHANT & GOULD P.C.
P.O. BOX 2903
MINNEAPOLIS MN 55402-0903

COPY MAILED

APR 2 3 2003

OFFICE OF PETITIONS

In re Application of
Paul J. Thompson
Application No. 09/879,425
Filed: June 12, 2001
Attorney Docket No. 11576.38USC1

ON PETITION

This is a decision on the petition, filed April 23, 2003, under 37 CFR 1.313(c)(2) to withdraw the above-identified application from issue after payment of the issue fee.

The petition is **GRANTED**.

The above-identified application is withdrawn from issue for consideration of a submission under 37 CFR 1.114 (request for continued examination). See 37 CFR 1.313(c)(2).

Petitioner is advised that the issue fee paid on April 7, 2003 in the above-identified application cannot be refunded. If, however, the above-identified application is again allowed, petitioner may request that it be applied towards the issue fee required by the new Notice of Allowance.[1]

Telephone inquiries should be directed to the undersigned at (703) 305-8859.

After receipt of the file in the Office of Petitions, the application will be forwarded to Technology Center AU 3738 for processing of the request for continued examination under 37 CFR 1.114.

Karen Creasy

Karen Creasy
Petitions Examiner
Office of Petitions
Office of the Deputy Commissioner
for Patent Examination Policy

---

[1] The request to apply the issue fee to the new Notice may be satisfied by completing and returning the new Issue Fee Transmittal Form PTOL-85(b), which includes the following language thereon: "Commissioner for Patents is requested to apply the Issue Fee and Publication Fee (if any) or re-apply any previously paid issue fee to the application identified above." Petitioner is advised that, whether a fee is indicated as being due or not, the Issue Fee Transmittal Form **must** be completed and timely submitted to avoid abandonment. Note the language in bold text on the first page of the Notice of Allowance and Fee(s) Due (PTOL-85).

UNITED STATES PATENT AND TRADEMARK OFFICE

COMMISSIONER FOR PATENTS
UNITED STATES PATENT AND TRADEMARK OFFICE
P.O. BOX 1450
ALEXANDRIA, VA 22313-1450
www.uspto.gov

LaHive & Cockfield
Floor 30, Suite 3000
One Post Office Square
Boston, MA 02109-2127

MAILED

APR 07 2010

OFFICE OF PETITIONS

In re Patent No. 7,425,541	:
Dubois et al.	: DECISION UPON REMAND AND
Issue Date: September 16, 2008	: RECONSIDERATION OF
Application No. 09/879,442	: PATENT TERM ADJUSTMENT
Filed: June 11,2001	: AND NOTICE OF INTENT
Attorney Docket No. MXI-321CPRCE	: TO ISSUE CERTIFICATE OF CORRECTION
Title: Enzyme-Cleavable Prodrug Compounds	:

This is a decision following remand from the District Court for the District of Columbia regarding the patent term adjustment indicated on the above-identified patent. The Court remanded this matter to the U.S. Patent and Trademark Office for recalculation of the patent term adjustment in accordance with the decision in Wyeth & Elan Pharma Int'l Ltd. v. Kappos, 591 F.3d 1364 (Fed. Cir. 2010).

The patent term adjustment indicated on the above-identified patent has been recalculated as directed by the Court. The term of the above-identified patent is extended or adjusted by thirteen hundred and forty-two (1342) days.

The application is being forwarded to the Certificates Branch for issuance of a certificate of correction indicating that the term of the above-identified patent is extended or adjusted by thirteen hundred and forty-two (1342) days.

Telephone inquiries specific to this matter should be directed to Senior Legal Advisor, Kery A. Fries at (571) 272-7757.

/Kery A. Fries/

Kery A. Fries
Senior Legal Advisor Attorney
Office of Patent Legal Administration
Office of Associate Commissioner
For Patent Examination Policy

Enclosure: Copy of DRAFT Certificate of Correction

UNITED STATES PATENT AND TRADEMARK OFFICE

CERTIFICATE OF CORRECTION

PATENT : 7,425,541 B2

DATED : September 16, 2008 **DRAFT**

INVENTOR(S) : Dubois et al.

It is certified that error appears in the above-identified patent and that said Letters Patent is hereby corrected as shown below:

On the cover page,

[*] Notice: Subject to any disclaimer, the term of this patent is extended or adjusted under 35 USC 154(b) by 703 days

Delete the phrase "by 703 days" and insert – by 1342 days--

PALM INTRANET

Day : Friday
Date: 4/2/2010
Time: 11:40:55

PTA Calculations for Application: 09/879442			
Application Filing Date:	06/11/2001	PTO Delay (PTO):	1102
Issue Date of Patent:	09/16/2008	Three Years:	0
Pre-Issue Petitions:	0	Applicant Delay (APPL):	399
Post-Issue Petitions:	0	Total PTA (days):	1342
PTO Delay Adjustment:	639		

File Contents History

Number	Date	Contents Description	PTO	APPL	START
102	04/02/2010	ADJUSTMENT OF PTA CALCULATION BY PTO	639		
94.5	08/27/2008	PTA 36 MONTHS	448		
94	09/16/2008	PATENT ISSUE DATE USED IN PTA CALCULATION			
93	08/15/2008	EXPORT TO FINAL DATA CAPTURE			
92	08/14/2008	DISPATCH TO FDC			
91	08/14/2008	APPLICATION IS CONSIDERED READY FOR ISSUE			
90	08/11/2008	ISSUE FEE PAYMENT VERIFIED			
89	08/11/2008	ISSUE FEE PAYMENT RECEIVED			
88	07/08/2008	FINISHED INITIAL DATA CAPTURE			
87	05/23/2008	SEQUENCE FORWARDED TO PUBS ON TAPE			
86	05/16/2008	EXPORT TO INITIAL DATA CAPTURE			
83	05/13/2008	MAIL NOTICE OF ALLOWANCE			
82	05/12/2008	NOTICE OF ALLOWANCE DATA VERIFICATION COMPLETED			
81	05/12/2008	CASE DOCKETED TO EXAMINER IN GAU			
80	05/12/2008	ISSUE REVISION COMPLETED			
79	05/12/2008	DOCUMENT VERIFICATION			
78	05/12/2008	EXAMINER'S AMENDMENT COMMUNICATION			
77	05/08/2008	EXAMINER INTERVIEW SUMMARY RECORD (PTOL - 413)			
76	05/12/2008	NOTICE OF ALLOWABILITY			
70	03/09/2008	DATE FORWARDED TO EXAMINER			
69	02/07/2008	RESPONSE AFTER NON-FINAL ACTION		62	65
68	02/07/2008	REQUEST FOR EXTENSION OF TIME - GRANTED			
67	01/16/2008	MAIL EXAMINER INTERVIEW SUMMARY (PTOL			

		- 413)			
66	01/08/2008	EXAMINER INTERVIEW SUMMARY RECORD (PTOL - 413)			
65	09/07/2007	MAIL NON-FINAL REJECTION			
64	09/04/2007	NON-FINAL REJECTION			
63	11/30/2001	INFORMATION DISCLOSURE STATEMENT CONSIDERED			
62	11/30/2001	INFORMATION DISCLOSURE STATEMENT (IDS) FILED			
61	06/18/2007	AFFIDAVIT(S) (RULE 131 OR 132) OR EXHIBIT(S) RECEIVED			
60	06/22/2007	DATE FORWARDED TO EXAMINER			
59	06/18/2007	AMENDMENT SUBMITTED/ENTERED WITH FILING OF CPA/RCE			
58	06/22/2007	DATE FORWARDED TO EXAMINER			
57	06/18/2007	REQUEST FOR CONTINUED EXAMINATION (RCE)		62	51
56	06/22/2007	DISPOSAL FOR A RCE / CPA / R129			
55	06/18/2007	REQUEST FOR EXTENSION OF TIME - GRANTED			
54	06/18/2007	WORKFLOW - REQUEST FOR RCE - BEGIN			
53	06/01/2007	MAIL EXAMINER INTERVIEW SUMMARY (PTOL - 413)			
52	05/24/2007	EXAMINER INTERVIEW SUMMARY RECORD (PTOL - 413)			
51	01/17/2007	MAIL FINAL REJECTION (PTOL - 326)			
50	01/08/2007	FINAL REJECTION			
49	10/17/2006	DATE FORWARDED TO EXAMINER			
48	10/05/2006	RESPONSE AFTER NON-FINAL ACTION		92	41
47	10/05/2006	REQUEST FOR EXTENSION OF TIME - GRANTED			
46	10/13/2006	CRF IS GOOD TECHNICALLY / ENTERED INTO DATABASE			
45	11/26/2001	CRF IS GOOD TECHNICALLY / ENTERED INTO DATABASE			
44	06/29/2001	CRF IS FLAWED TECHNICALLY / NOT ENTERED INTO DATABASE			
42	04/10/2006	CORRESPONDENCE ADDRESS CHANGE			
41	04/05/2006	MAIL NON-FINAL REJECTION			
40	04/03/2006	NON-FINAL REJECTION			
39	01/24/2006	DATE FORWARDED TO EXAMINER			

38	01/03/2006	RESPONSE AFTER NON-FINAL ACTION		94	36
37	01/03/2006	REQUEST FOR EXTENSION OF TIME - GRANTED			
36	07/01/2005	MAIL NON-FINAL REJECTION			
35	06/27/2005	NON-FINAL REJECTION			
34	05/12/2005	DATE FORWARDED TO EXAMINER			
33	05/04/2005	RESPONSE AFTER NON-FINAL ACTION		89	28
32	05/04/2005	REQUEST FOR EXTENSION OF TIME - GRANTED			
31	12/14/2004	CORRESPONDENCE ADDRESS CHANGE			
30	12/14/2004	CHANGE IN POWER OF ATTORNEY (MAY INCLUDE ASSOCIATE POA)			
29	12/02/2004	MISCELLANEOUS INCOMING LETTER			
28	11/04/2004	MAIL NON-FINAL REJECTION			
27	11/01/2004	NON-FINAL REJECTION			
26	09/09/2004	DATE FORWARDED TO EXAMINER			
25	08/26/2004	RESPONSE TO ELECTION / RESTRICTION FILED			
24	08/26/2004	REQUEST FOR EXTENSION OF TIME - GRANTED			
23	08/26/2004	WORKFLOW INCOMING AMENDMENT IFW			
22	05/26/2004	MAIL RESTRICTION REQUIREMENT	654		-1
21	05/25/2004	REQUIREMENT FOR RESTRICTION / ELECTION			
20	05/05/2004	CASE DOCKETED TO EXAMINER IN GAU			
19	04/19/2004	CASE DOCKETED TO EXAMINER IN GAU			
18	04/15/2004	TRANSFER INQUIRY TO GAU			
17	08/22/2003	IFW TSS PROCESSING BY TECH CENTER COMPLETE			
16	03/06/2003	CORRESPONDENCE ADDRESS CHANGE			
15	03/06/2003	MAIL-RECORD PETITION DECISION OF GRANTED RELATED TO ATTORNEY			
14	12/31/2002	PETITION ENTERED			
13	10/04/2002	CASE DOCKETED TO EXAMINER IN GAU			
12.7	09/18/2002	INFORMATION DISCLOSURE STATEMENT (IDS) FILED			
12	09/18/2002	INFORMATION DISCLOSURE STATEMENT (IDS) FILED			
11	06/15/2002	CASE DOCKETED TO EXAMINER IN GAU			
9	12/19/2001	CASE DOCKETED TO EXAMINER IN GAU			
8	12/05/2001	APPLICATION DISPATCHED FROM OIPE			

7	12/03/2001	APPLICATION IS NOW COMPLETE			
5	07/26/2001	NOTICE MAILED--APPLICATION INCOMPLETE--FILING DATE ASSIGNED			
4	07/26/2001	CORRESPONDENCE ADDRESS CHANGE			
3	06/21/2001	IFW SCAN & PACR AUTO SECURITY REVIEW			
2	06/11/2001	CRF DISK HAS BEEN RECEIVED BY PREEXAM / GROUP / PCT			
1	06/11/2001	INITIAL EXAM TEAM NN			

Search Another: Application# [ ] Search

EXPLANATION OF PTA CALCULATION

EXPLANATION OF PTE CALCULATION

To go back, right click here and select Back. To go forward, right click here and select Forward. To refresh, right click here and select Refresh.

Back to OASIS | Home page

UNITED STATES PATENT AND TRADEMARK OFFICE

Commissioner for Patents
United States Patent and Trademark Office
P.O. Box 1450
Alexandria, VA 22313-1450
www.uspto.gov

STRADLING YOCCA CARLSON & RAUTH
IP Department
660 Newport Center Drive, Suite 1600
P.O. Box 7680
Newport Beach CA 92660-6441

Paper No. 11

COPY MAILED

AUG 28 2008

OFFICE OF PETITIONS

In re Application of	:	
Henry Webber	:	
Application No. 09/879,472	:	DECISION ON PETITION
Filed: June 11, 2001	:	
Attorney Docket No. 12538-11/JWE	:	

This is a decision on the petition under the unintentional provisions of 37 CFR 1.137(b), filed June 24, 2008, to revive the above-identified application.

The petition is **DISMISSED**.

Any request for reconsideration of this decision must be submitted within TWO (2) MONTHS from the mail date of this decision. Extensions of time under 37 CFR 1.136(a) are permitted. The reconsideration request should include a cover letter entitled "Renewed Petition under 37 CFR 1.137(b)." This is **not** a final agency action within the meaning of 5 U.S.C. § 704.

The application became abandoned for failure to reply in a timely manner to the Restriction Requirement, mailed February 7, 2003 , which set a shortened statutory period for reply of one (1) month or thirty (30) days (whichever is later). No extensions of time under the provisions of 37 CFR 1.136(a) were obtained. Accordingly, the application became abandoned on March 8, 2003.

A grantable petition under 37 CFR 1.137(b) must be accompanied by: (1) the required reply, unless previously filed; (2) the petition fee as set forth in 37 CFR 1.17(m); (3) a statement that the entire delay in filing the required reply from the due date for the reply until the filing of a grantable petition pursuant to 37 CFR 1.137(b) was unintentional; and (4) any terminal disclaimer (and fee as set forth in 37 CFR 1.20(d)) required by 37 CFR 1.137(d). Where there is a question as to whether either the abandonment or the delay in filing a petition under 37 CFR 1.137 was unintentional, the Director may require additional information. *See* MPEP 711.03(c)(II)(C) and (D). The instant petition lacks item (3).

There are three periods to be considered during the evaluation of a petition under 37 CFR 1.137(b):

(1) the delay in reply that originally resulted in the abandonment;

(2) the delay in filing an initial petition pursuant to 37 CFR 1.137(b) to revive the application; and

(3) the delay in filing a grantable petition pursuant to 37 CFR 1.137(b) to revive the application.

Currently, the delay has not been shown to the satisfaction of the Director to be unintentional for periods (1) and (2).

As to Period (1):

The patent statute at 35 U.S.C. § 41(a)(7) authorizes the Director to revive an "unintentionally abandoned application." The legislative history of Public Law 97-247 reveals that the purpose of 35 U.S.C. § 41(a)(7) is to permit the Office to have more discretion than in 35 U.S.C. §§ 133 or 151 to revive abandoned applications in appropriate circumstances, but places a limit on this discretion, stating that "[u]nder this section a petition accompanied by either a fee of $500 or a fee of $50 **would not be granted where the abandonment** or the failure to pay the fee for issuing the patent **was intentional** as opposed to being unintentional or unavoidable." See H.R. Rep. No. 542, 97th Cong., 2d Sess. 6-7 (1982), *reprinted in* 1982 U.S.C.C.A.N. 770-71. The revival of an intentionally abandoned application is antithetical to the meaning and intent of the statute and regulation.

35 U.S.C. § 41(a)(7) authorizes the Director to accept a petition "for the revival of an unintentionally abandoned application for a patent." As amended December 1, 1997, 37 CFR 1.137(b)(3) provides that a petition under 37 CFR 1.137(b) must be accompanied by a statement that the delay was unintentional, but provides that "[t]he Commissioner may require additional information where there is a question whether the delay was unintentional." Where, as here, there is a question whether the initial delay was unintentional, the petitioner must meet the burden of establishing that the delay was unintentional within the meaning of 35 U.S.C. § 41(a)(7) and 37 CFR 1.137(b). *See* In re Application of G, 11 USPQ2d 1378, 1380 (Comm'r Pats. 1989); 37 CFR 1.137(b). Here, in view of the inordinate delay (almost 2 years) in resuming prosecution, there is a question whether the entire delay was unintentional. Petitioner should note that the issue is not whether some of the delay was unintentional by any party; rather, the issue is whether the entire delay has been shown to the satisfaction of the Director to be unintentional.

The question under 37 CFR 1.137(b) for period (1) is whether the delay on the part of the party having the right or authority to reply to avoid abandonment (or not reply) was unintentional. Accordingly, any renewed petition must clearly identify the party having the right to reply to avoid abandonment on March 8, 2003. That party, in turn must explain what effort(s) was made to further reply to the outstanding Office action and, further, why no reply was filed. If no effort was made to further reply, then that party must explain why the delay in this application does not result from a deliberate course of action (or inaction). Likewise, as Stradling, Yocca, Carlson & Rauth was counsel of record at the time of abandonment, Stradling, Yocca, Carlson & Rauth should explain why this application became abandoned while it was under their control and what efforts Stradling, Yocca, Carlson & Rauth made to further reply of itself and with whom this matter was discussed outside of Stradling, Yocca, Carlson & Rauth. Copies of any correspondence relating to the filing, or to not filing a further reply to the outstanding Office action are required from responsible person(s), and whoever else was involved with this application at the time of abandonment. Statements are required from any and all persons at Stradling, Yocca, Carlson & Rauth, and the responsible person(s) having firsthand knowledge of the circumstances surrounding the lack of a reply to the outstanding Office action. As the courts have made clear, it is pointless for the USPTO to revive a long abandoned application without an adequate showing that the delay did not result from a deliberate course of action. *See* Lawman Armor v. Simon, 2005 U.S. Dist. LEXIS 10843, 74 USPQ2d 1633 (DC EMich 2005); Field Hybrids, LLC v. Toyota Motor Corp., 2005 U.S. Dist. LEXIS 1159 (D. Minn Jan. 27, 2005); Lumenyte Int'l Corp. v. Cable Lite Corp., Nos. 96-1011, 96-1077, 1996 U.S. App. LEXIS 16400, 1996 WL 383927 (Fed. Cir. July 9, 1996) (unpublished) (patents held unenforceable due to a finding of inequitable conduct in submitting an inappropriate statement that the abandonment was unintentional).

As to Period (2):

Likewise, where the applicant deliberately chooses not to seek or persist in seeking the revival of an abandoned application, or where the applicant deliberately chooses to delay seeking the revival of an abandoned application, the resulting delay in seeking revival of the abandoned application cannot be considered as "unintentional" within the meaning of 37 CFR 1.137(b). *See* MPEP 711.03(c).

The language of both 35 U.S.C. § 41(a)(7) and 37 CFR 1.137(b) are clear and unambiguous, and, furthermore, without qualification. That is, the delay in filing the reply during prosecution, as well as in filing the petition seeking revival, must have been, without qualification, "unintentional" for the reply to now be accepted on petition. The Office requires that the entire delay be at least unintentional as a prerequisite to revival of an abandoned application to prevent abuse and injury to the public. *See* H.R. Rep. No. 542, 97th Cong., 2d Sess. 7 (1982), reprinted in 1982 U.S.C.C.A.N. 771 ("[i]n order to prevent abuse and injury to the public the Commissioner . . . could require applicants to act promptly after becoming aware of the abandonment"). The December 1997 change to 37 CFR 1.137 did not create any new right to overcome an intentional delay in seeking revival, or in renewing an attempt at seeking revival, of an abandoned application. *See* Changes to Patent Practice and Procedure; Final Rule Notice, 62 Fed. Reg. 53131, 53160 (October 10, 1997), 1203 Off. Gaz. Pat. Office 63, 87 (October 21, 1997), which

clearly stated that any protracted delay (here, over 2 years) could trigger, as here, a request for additional information. As the courts have since made clear, a protracted delay in seeking revival, as here, requires a petitioner's detailed explanation seeking to excuse the delay as opposed to USPTO acceptance of a general allegation of unintentional delay. *See* Lawman Armor v. Simon, 2005 U.S. Dist. LEXIS 10843, 74 USPQ2d 1633, at 1637-8 (DC EMich 2005); Field Hybrids, LLC v. Toyota Motor Corp., 2005 U.S. Dist. LEXIS 1159 (D. Minn Jan. 27, 2005) at *21-*23. Statements are required from any and all persons then at Stradling, Yocca, Carlson & Rauth and the responsible person(s) having firsthand knowledge of the circumstances surrounding the protracted delay, after the abandonment date, in seeking revival.

As noted in MPEP 711.03(c)(II), subsection D, in instances in which such petition was not filed within 1 year of the date of abandonment of the application, applicants should include:

> (A) the date that the applicant first became aware of the abandonment of the application; and
> (B) a showing as to how the delay in discovering the abandoned status of the application occurred despite the exercise of due care or diligence on the part of the applicant.

In either instance, applicant's failure to carry the burden of proof to establish that the "entire" delay was "unavoidable" or "unintentional" may lead to the denial of a petition under 37 CFR 1.137(b), regardless of the circumstances that originally resulted in the abandonment of the application. *See also* New York University v. Autodesk, 2007 U.S. DIST LEXIS, U.S.District LEXIS 50832, *10 -*12 (S.D.N.Y. 2007)(protracted delay in seeking revival undercuts assertion of unintentional delay).

There is no indication that the person signing the instant petition was ever given a power of attorney or authorization of agent to prosecute the above-identified application. In accordance with 37 CFR 1.34(a), the signature appearing on the petition shall constitute a representation to the United States Patent and Trademark Office that he/she is authorized to represent the particular party in whose behalf he/she acts. However, if petitioner desires to receive future correspondence regarding this application, the appropriate power of attorney or authorization of agent must be submitted. A courtesy copy of this decision is being mailed to petitioner. Nevertheless, all future correspondence regarding this application file will be directed solely to the address of record until otherwise instructed.

An extension of time under 37 CFR 1.136 must be filed prior to the expiration of the maximum extendable period for reply. *See* In re Application of S., 8 USPQ2d 1630, 1631 (Comm'r Pats. 1988). Since the $1115.00 extension of time fee submitted with the petition on June 24, 2008 was subsequent to the maximum extendable period for reply, the fee will be refunded back to petitioner deposited account no. 01-1960.

Any renewed petition may be addressed as follows:

By Mail: Mail Stop PETITION
Commissioner for Patents
P. O. Box 1450
Alexandria, VA 22313-1450

By hand: U. S. Patent and Trademark Office
Customer Service Window, Mail Stop Petitions
Randolph Building
401 Dulany Street
Alexandria, VA 22314

The centralized facsimile number is **(571) 273-8300.**

Correspondence regarding this decision may also be filed through the electronic filing system of the USPTO.

To expedite consideration, petitioner may wish to contact the undersigned regarding the filing of the renewed petition under 37 CFR 1.137(b).

Telephone inquiries concerning this decision should be directed to JoAnne Burke at (571) 272-4584.

Irvin Dingle
Petitions Examiner
Office of Petitions

cc: Vic Lin
Myers Dawes Andras & Sherman LLP
19900 MacArthur Blvd., Suite 1150
Irvine, CA 92612

UNITED STATES PATENT AND TRADEMARK OFFICE

Commissioner for Patents
United States Patent and Trademark Office
P.O. Box 1450
Alexandria, VA 22313-1450
www.uspto.gov

Vic Lin
Myers Dawes Andras & Sherman LLP
19900 MacArthur Blvd., Suite 1150
Irvine, CA 92612

Paper No. 14

MAILED

MAY 20 2009

OFFICE OF PETITIONS

In re Application of	:	
Henry Webber	:	
Application No. 09/879,472	:	DECISION ON PETITION
Filed: June 11, 2001	:	
Attorney Docket No. 12538-11/JWE	:	

This is a decision on the renewed petition under the unintentional provisions of 37 CFR 1.137(b), filed December 31, 2008, to revive the above-identified application.

The petition is **GRANTED**.

The application became abandoned for failure to reply in a timely manner to the Restriction Requirement, mailed February 7, 2003 , which set a shortened statutory period for reply of one (1) month or thirty (30) days (whichever is later). No extensions of time under the provisions of 37 CFR 1.136(a) were obtained. Accordingly, the application became abandoned on March 8, 2003.

The petition satisfies the requirements of 37 CFR 1.137(b) in that petitioner has supplied (1) the reply in the form of an Election, (2) the petition fee of $1540, and (3) a proper statement of unintentional delay.

The Revocation Power of Attorney submitted with the petition on December 31, 2008, has been accepted. Correspondence in this application will be mailed to the above address.

Telephone inquiries concerning this decision should be directed to JoAnne Burke at (571) 272-4584.

This application is being referred to Technology Center AU ~~1724~~ 2854 for appropriate action by the Examiner in the normal course of business on the reply received.

Ramesh Krishnamurthy

Ramesh Krishnamurthy
Petitions Examiner
Office of Petitions

UNITED STATES PATENT AND TRADEMARK OFFICE

COMMISSIONER FOR PATENTS
UNITED STATES PATENT AND TRADEMARK OFFICE
P.O. BOX 1450
ALEXANDRIA, VA 22313-1450
www.uspto.gov

COPY MAILED

NOV 2 6 2003

OFFICE OF PETITIONS

H.G. BRUSS 25 LDP
OWENS-ILLINOIS, INC.
ONE SEAGATE
TOLEDO, OH 43666

In re Application of :
David L. Lewis :
Application No. 09/879,495 : ON PETITION
Filed: June 12, 2001 :
Attorney Docket No. 17489 USA :

This is a decision in response to a petition, filed May 12, 2003, under 37 CFR 1.137(b) to revive the instant nonprovisional application for failure to timely notify the U.S. Patent and Trademark (USPTO) of the filing of an application in a foreign country, or under a multinational treaty that requires publication of applications eighteen months after filing. *See* 37 CFR 1.137(f).

The petition is **DISMISSED** as moot in view of the argument contained in the "Request for Withdrawal of Petition to Revive Under 37 CFR 1.137(b), (c) and (f)" filed by facsimile transmission on October 3, 2003.

The request for a refund of the $1300 petition fee is GRANTED.

Any inquiries concerning this decision may be directed to Sherry D. Brinkley at (703) 305-9220.

This application is being returned to Technology Center Art Unit 1731 to await a reply to the non-final Office action mailed June 24, 2003.

Sherry D. Brinkley
Sherry D. Brinkley
Petitions Examiner
Office of Petitions
Office of the Deputy Commissioner
for Patent Examination Policy

UNITED STATES PATENT AND TRADEMARK OFFICE

COMMISSIONER FOR PATENTS
UNITED STATES PATENT AND TRADEMARK OFFICE
P.O. BOX 1450
ALEXANDRIA, VA 22313-1450
www.uspto.gov

COPY MAILED

FEB 0 2 2007

OFFICE OF PETITIONS

IBM CORPORATION, T.J. WATSON RESEARCH CENTER
P.O. BOX 218
YORKTOWN HEIGHTS, NY 10598

In re Application of :
Junya Shimizu, et al. :
Application No. 09/879,529 : ON PETITION
Filed: June 12, 2001 :
Attorney Docket No. JP920000126US1 :

This is a decision in response to the petition, filed August 15, 2006, to revive the above-identified application under the provisions of 37 CFR 1.137(b).

There is no indication that the person signing the instant petition was ever given a power of attorney or authorization of agent to prosecute the above-identified application. However, in accordance with 37 CFR 1.34(a), the signature of Ido Tuchman appearing on the petition shall constitute a representation to the United States Patent and Trademark Office that he is authorized to represent the particular party on whose behalf he acts. A courtesy copy of this decision is being mailed to petitioner. However, if Mr. Tuchman desires to receive future correspondence regarding this application, the appropriate power of attorney or authorization of agent must be submitted. All future correspondence regarding this application file will be directed solely to the address of record.

The above-identified application became abandoned for failure to reply in a timely manner to the non-final Office action mailed May 18, 2005. A Notice of Abandonment was mailed on June 29, 2006. In response, on August 15, 2005, the present petition was filed.

The petition satisfies the requirements of 37 CFR 1.137(b) in that petitioner has supplied (1) the reply in the form of an amendment; (2) the petition fee of $1,500; and (3) the required statement of unintentional delay[1].

Accordingly, the petition is **GRANTED**.

The application is being referred to Technology Center AU 2624 for consideration of the amendment filed August 15, 2006.

[1] 37 CFR 1.137(b)(3) requires a statement that the entire delay in filing the required reply from the due date for the reply until the filing of a grantable petition pursuant to 37 CFR 1.137(b) was unintentional. While the statement is not made by an attorney of record, such statement is being treated as having been made as the result of a reasonable inquiry into the facts and circumstances of such delay. See 37 CFR 10.18(b) and Changes to Patent Practice and Procedure; Final Rule Notice, 62 Fed. Reg. 53131, 53178 (October 10, 1997), 1203 Off. Gaz. Pat. Office 63, 103 (October 21, 1997). In the event that such an inquiry has not been made, petitioner must make such an inquiry. If such inquiry results in the discovery that it is not correct that the entire delay in filing the required reply from the due date for the reply until the filing of a grantable petition pursuant to 37 CFR 1.137(b) was unintentional, petitioner must notify the Office.

Telephone inquiries concerning this decision should be directed to the undersigned at (571) 272-3204. Inquiries relating to further prosecution should be directed to the Technology Center.

Sherry D. Brinkley
Petitions Examiner
Office of Petitions

cc: IDO TUCHMAN
82-70 BEVERLY ROAD
KEW GARDENS, NY 11415

UNITED STATES PATENT AND TRADEMARK OFFICE

Commissioner for Patents
United States Patent and Trademark Office
P. O. Box 1450
Alexandria, VA 22313-1450
www.uspto.gov

Paper No. 8

Terrance A. Meador
Gary, Cary, Ware & Freidenrich
4365 Executive Drive,
Suite 1100
San Diego, CA 92121-2133

COPY MAILED

MAY 1 6 2003

OFFICE OF PETITIONS

In re Application of	:	
James Alexander Reeds III et al	:	
Application No. 09/879,575	:	DECISION GRANTING PETITION
Filed: June 12, 2001	:	UNDER 37 CFR 1.137(f)
Attorney Docket No. 743US	:	

This is a decision on the petition, filed by facsimile transmission on May 8, 2003, to revive the instant nonprovisional application under the unintentional provisions of 37 CFR 1.137(f).

The petition is **GRANTED**.

Petitioner states that the instant nonprovisional application is the subject of an application filed in a foreign country on May 15, 2002. However, the U.S. Patent and Trademark Office was unintentionally not notified of this filing within 45 days subsequent to the filing of the subject application in a foreign country.

In view of the above, this application became abandoned pursuant to 35 U.S.C. § 122(b)(2)(B)(iii) and 37 CFR 1.213(c) for failure to timely notify the Office of the filing of an application in a foreign country, or under a multilateral international agreement, that requires publication of applications 18 months after filing.

A petition under 37 CFR 1.137(f) must be accompanied by:

(1) the reply which is met by the notification of such filing in a foreign country or under a multinational treaty;

(2) the petition fee as set forth in 37 CFR 1.17(m); and

(3) a statement that the entire delay in filing the required reply from the due date of the reply until

the filing of a grantable petition was unintentional.

The instant petition has been found to be in compliance with 37 CFR 1.137(f). Accordingly, the failure to timely notify the Office of a foreign or international filing within 45 days after the date of filing of such foreign or international application as provided by 35 U.S.C. § 122(b)(2)(B)(iii) and 37 CFR 1.213(c) is accepted as having been unintentionally delayed.

The previous Request and Certification under 35 U.S.C. § 122(b)(2)(B)(i) has been rescinded. A Notice Regarding Rescission of Nonpublication Request which sets forth the projected publication date of August 21, 2003 accompanies this decision on petition.

Any inquiries concerning this decision may be directed to the undersigned at (703) 305-8680.

This application is being forwarded to Technology Center Art Unit 2132 for examination in due course.

Frances Hicks

Frances Hicks
Petitions Examiner
Office of Petitions
Office of the Deputy Commissioner
for Patent Examination Policy

ATTACHMENT: Notice Regarding Rescission of Nonpublication Request

UNITED STATES PATENT AND TRADEMARK OFFICE

#7

UNITED STATES DEPARTMENT OF COMMERCE
United States Patent and Trademark Office
Address: COMMISSIONER OF PATENTS AND TRADEMARKS
P.O. Box 1450
Alexandria, Virginia 22313-1450
www.uspto.gov

APPLICATION NUMBER	FILING/RECEIPT DATE	FIRST NAMED APPLICANT	ATTY. DOCKET NO.
09/879,575	06/12/2001	James Alexander Reeds III	1999-0275

CONFIRMATION NO. 4755

OC000000010050851

Terrance A. Meador
Gary, Cary, Ware & Freidenrich
4365 Executive Drive,
Suite 1100
San Diego,, CA 92121-2133

Date Mailed: 05/16/2003

NOTICE REGARDING RESCISSION OF NONPUBLICATION REQUEST

Applicant's rescission of the previously-filed nonpublication request is acknowledged. The rescission has been reflected in the Office's computer records so that the earliest possible projected publication date can be assigned.

The projected publication date is 08/21/2003.

If the applicant filed the application with a nonpublication request and then subsequently filed an application directed to the invention disclosed in the application with the nonpublication request in another country, or under a multilateral international agreement, that requires publication of applications eighteen months after filing, applicant was required to provide notice of foreign filing within 45 days after the date of the filing of such foreign or international application. If the rescission did not contain the notice of foreign filing (e.g., the PTO/SB/36, version 10/01 was not used), or if the notice of foreign filing was not filed within the 45 day period, the application is ABANDONED, and a petition under 37 CFR 1.137(b)/(f) is required to be filed. (See 35 U.S.C. 122(b)(2)(B)(iii) and 37 CFR 1.213(c).)

Any petition, filed with the rescission, under 37 CFR 1.137(b)/(f) to revive the application is being forwarded to the Office of Petitions for a decision. Note that the filing of the petition will not operate to stay any period of reply that may be running against the application.

Questions regarding petitions to revive should be directed to the Office of Petitions at (703) 305-9282. Questions regarding publications of patent applications should be directed to the patent application publication hotline at (703) 605-4283 or by e-mail pgpub@uspto.gov.

UNITED STATES PATENT AND TRADEMARK OFFICE

UNITED STATES DEPARTMENT OF COMMERCE
United States Patent and Trademark Office
Address: COMMISSIONER FOR PATENTS
P.O. Box 1450
Alexandria, Virginia 22313-1450
www.uspto.gov

Gregor N. Neff, Esq.
489 5th Avenue
14th Floor
New York, NY 10017

Mail Date: 04/26/2010

Applicant	: John Skoufis	: DECISION ON REQUEST FOR
Patent Number	: 7611011	: RECALCULATION of PATENT
Issue Date	: 11/03/2009	: TERM ADJUSTMENT IN VIEW
Application No	: 09/879,613	: OF WYETH AND NOTICE OF INTENT TO
Filed	: 06/12/2001	: ISSUE CERTIFICATE OF CORRECTION
		:

The Request for Recalculation is **GRANTED** to the extent indicated.

The patent term adjustment has been determined to be **902** days. The USPTO will *sua sponte* issue a certificate of correction reflecting the amount of PTA days determined by the recalculation.

Prior to the issuance of the certificate of correction, the USPTO will afford patentee an opportunity to be heard and request reconsideration. Accordingly, patentee has **one month or thirty (30) days**, whichever is longer, to file a request for reconsideration of this patent term adjustment calculation. See 35 U.S.C. 154(b)(3)(B)(ii) and 37 CFR 1.322(a)(4). No extensions of time will be granted under 37 CFR 1.136.

Patentee should use document code PET.OP if electronically filing a request for reconsideration of this patent term adjustment calculation. The patentee must also include the information required by 37 CFR 1.705(b)(2) and the fee required by 37 CFR 1.18(e). If patentee does not file a timely request for reconsideration of this patent term adjustment calculation including the information required by 37 CFR 1.705(b)(2) and the fee required by 37 CFR 1.18(e), the USPTO will issue a certificate of correction reflecting the PTA determination noted above.

Patentee should be aware that in order to preserve the right to review in the United States District Court for the District of Columbia of the USPTO patent term adjustment determination, patentee must ensure that he or she also take the steps required under 35 U.S.C. 154(b)(4)(A) in a timely manner. Nothing in the request for recalculation should be construed as providing an alternative time frame for commencing a civil action under 35 U.S.C. 154(b)(4)(A).

Any questions concerning this decision should be directed to the Office of Patent Legal Administration at 571-272-7702.

01 JUL 2005

UNITED STATES PATENT and TRADEMARK OFFICE

COMMISSIONER FOR PATENTS
UNITED STATES PATENT AND TRADEMARK OFFICE
P.O BOX 1450
ALEXANDRIA, VA 22313-1450
www.uspto.gov

DILWORTH & BARRSES, LLP
333 Earle Ovington Boulevard
Uniondale, New York 11553

In re Application of	: DECISION ON
Sung-Ho CHOI et al	:
Application No.: 10/879,651	:
Filing Date: 12 June 2001	: PETITION UNDER
Attorney Docket No.: 678-692	:
For: METHOD OF ASSIGNING AN UPLINK	:
RANDOM ACCESS CHANNEL IN A CDMA	:
MOBILE COMMUNICATION SYSTEM	: 37 CFR 1.181

This decision is in response to applicants' "PETITION TO WITHDRAW HOLDING OF ABANDONMENT UNDER 37 C.F.R. 1.181" filed on 08 January 2004, requesting acceptance of a copy of the Declaration submitted as filed in the USPTO on 08 January 2002. Applicants have submitted, inter alia, a copy of the 08 January 2002 PTO stamped itemized postcard receipt.

BACKGROUND

On 12 June 2001, applicants filed a Utility Patent Application Transmittal Letter in the USPTO. Filed with the Transmittal Letter was, inter alia, the basic filing fee. No oath or declaration of the inventors accompanied the transmittal letter at such time.

On 08 September 2001, the USPTO mailed a "NOTIFICATION OF MISSING PARTS OF NONPROVISIONAL APPLICATION" which informed applicants, inter alia, that an "Oath or Declaration is missing. A properly signed oath or declaration in compliance with 37 CFR 1.63, identifying the application by the above Application Number and Filing Date, is required."

On 10 November 2004, the USPTO mailed a "NOTICE OF ABANDONMENT UNDER 37 CFR 1.53(f) OR (g)," which stated that the above-identified application was abandoned since no reply was received.

In response to the "NOTICE OF ABANDONMENT" mailed on 17 December 2003, applicants submitted on 08 January 2004 the instant petition requesting withdrawal of the "Notice of Abandonment." In support of the request, applicants have provided a copy of the returned/stamped receipt card acknowledging a receipt date of 08 January 2002, within the time period of response.

DISCUSSION

Applicants' present petition accompanied by a copy of the following document, filed purportedly with the USPTO as indicated in the stamped postcard:

Executed Declaration and Power of Attorney
(1) Petition for Extension of Time
(2) Copy of Form PTO 1553

The postcard lists the above item and bears a USPTO date of stamp as 08 January 2002.

MPEP 503 provides:

> A postcard receipt which itemizes and properly identifies the papers which are being filed serves as *prima facie* evidence of receipt in the PTO of all the items listed thereon on the date stamped thereon by the PTO.

Applicant's postcard is accepted as *prima facie* that a Declaration was timely deposited with the U.S. Patent and Trademark Office on 08 January 2002.

Accordingly, the date of receipt for the Declaration is 08 January 2002.

CONCLUSION

The petition under 37 CFR 1.181 is **GRANTED.**

The NOTICE OF ABANDONMENT, mailed 17 December 2003 has been **VACATED**.

This application is being forwarded to the Office of Initial Patent Examination (OIPE) for continue processing.

Rafael Bacares
PCT Legal Examiner
PCT Legal Office
Telephone: (571) 272-3276
Facsimile: (571) 273-0459

Under the Paperwork Reduction Act of 1995, no persons are required to respond to a collection of information unless it displays valid OMB control number.

PETITION TO ACCEPT UNINTENTIONALLY DELAYED PAYMENT OF MAINTENANCE FEE IN AN EXPIRED PATENT (37 CFR 1.378(c))

Patent Number	Issue Date (YYYY-MM-DD)	Application Number	Filing Date (YYYY-MM-DD)	Docket Number (if applicable)
6516967	2003-02-11	09879685	2001-06-12	

CAUTION: Maintenance fee (and surcharge, if any) payment must correctly identify: (1) the patent number and (2) the application number of the actual U.S. application leading to issuance of that patent to ensure the fee(s) is/are associated with the correct patent. 37 CFR 1.366(c) and (d).

SMALL ENTITY
☒ Patentee claims, or has previously claimed, small entity status. See 37 CFR 1.27.

LOSS OF ENTITLEMENT TO SMALL ENTITY STATUS
☐ Patentee is no longer entitled to small entity status. See 37 CFR 1.27(g)

NOT Small Entity		Small Entity	
Fee	Code	Fee	Code
○ 3 ½ year	(1551)	◉ 3 ½ year	(2551)
○ 7 ½ year	(1552)	○ 7 ½ year	(2552)
○ 11 ½ year	(1553)	○ 11 ½ year	(2553)

SURCHARGE
The surcharge required by 37 CFR 1.20(i)(2) (Fee Code 1558) must be paid as a condition of accepting unintentionally delayed payment of the maintenance fee.

MAINTENANCE FEE (37 CFR 1.20(e)-(g))
The appropriate maintenance fee must be submitted with this petition.

STATEMENT
THE UNDERSIGNED CERTIFIES THAT THE DELAY IN PAYMENT OF THE MAINTENANCE FEE TO THIS PATENT WAS UNINTENTIONAL

PETITIONER(S) REQUEST THAT THE DELAYED PAYMENT OF THE MAINTENANCE FEE BE ACCEPTED AND THE PATENT REINSTATED

THIS PORTION MUST BE COMPLETED BY THE SIGNATORY OR SIGNATORIES

37 CFR 1.378(d) states: "Any petition under this section must be signed by an attorney or agent registered to practice before the Patent and Trademark Office, or by the patentee, the assignee, or other party in interest."

I certify, in accordance with 37 CFR 1.4(d)(4) that I am

◉ An attorney or agent registered to practice before the Patent and Trademark Office

○ A sole patentee

○ A joint patentee; I certify that I am authorized to sign this submission on behalf of all the other patentees.

○ A joint patentee; all of whom are signing this e-petition

○ The assignee of record of the entire interest

Patent Practitioner			
A signature of the applicant or representative is required in accordance with 37 CFR 1.33 and 10.18. Please see 37 CFR 1.4(d) for the form of the signature			
Signature	/Rick B. Yeager/	Date (YYYY-MM-DD)	2007-05-31
Name	Rick B. Yeager, Attorney	Registration Number	39434

This collection of information is required by 37 CFR 1.378(c). The information is required to obtain or retain a benefit by the public which is to file (and by the USPTO to process) an application. Confidentiality is governed by 35 U.S.C. 122 and 37 CFR 1.11 and 1.14. This collection is estimated to take 1 hour to complete, including gathering, preparing, and submitting the completed application form to the USPTO. Time will vary depending upon the individual case. Any comments on the amount of time you require to complete this form and/ or suggestions for reducing this burden, should be sent to the Chief Information Officer, U.S. Patent and Trademark Office, U.S. Department of Commerce, P.O. Box 1450, Alexandria, VA 22313-1450. DO NOT SEND FEES OR COMPLETED FORMS TO THIS ADDRESS. **This form can only be used when in conjunction with EFS-Web. If this form is mailed to the USPTO, it may cause delays in reinstating the patent.**

Privacy Act Statement

The Privacy Act of 1974 (P.L. 93-579) requires that you be given certain information in connection with your submission of the attached form related to a patent application or patent. Accordingly, pursuant to the requirements of the Act, please be advised that: (1) the general authority for the collection of this information is 35 U.S.C. 2(b)(2); (2) furnishing of the information solicited is voluntary; and (3) the principal purpose for which the information is used by the U.S. Patent and Trademark Office is to process and/or examine your submission related to a patent application or patent. If you do not furnish the requested information, the U.S. Patent and Trademark Office may not be able to process and/or examine your submission, which may result in termination of proceedings or abandonment of the application or expiration of the patent.

The information provided by you in this form will be subject to the following routine uses:

1. The information on this form will be treated confidentially to the extent allowed under the Freedom of Information Act (5 U.S.C. 552) and the Privacy Act (5 U.S.C. 552a). Records from this system of records may be disclosed to the Department of Justice to determine whether the Freedom of Information Act requires disclosure of these record s.

2. A record from this system of records may be disclosed, as a routine use, in the course of presenting evidence to a court, magistrate, or administrative tribunal, including disclosures to opposing counsel in the course of settlement negotiations.

3. A record in this system of records may be disclosed, as a routine use, to a Member of Congress submitting a request involving an individual, to whom the record pertains, when the individual has requested assistance from the Member with respect to the subject matter of the record.

4. A record in this system of records may be disclosed, as a routine use, to a contractor of the Agency having need for the information in order to perform a contract. Recipients of information shall be required to comply with the requirements of the Privacy Act of 1974, as amended, pursuant to 5 U.S.C. 552a(m).

5. A record related to an International Application filed under the Patent Cooperation Treaty in this system of records may be disclosed, as a routine use, to the International Bureau of the World Intellectual Property Organization, pursuant to the Patent Cooperation Treaty.

6. A record in this system of records may be disclosed, as a routine use, to another federal agency for purposes of National Security review (35 U.S.C. 181) and for review pursuant to the Atomic Energy Act (42 U.S.C. 218(c)).

7. A record from this system of records may be disclosed, as a routine use, to the Administrator, General Services, or his/her designee, during an inspection of records conducted by GSA as part of that agency's responsibility to recommend improvements in records management practices and programs, under authority of 44 U.S.C. 2904 and 2906. Such disclosure shall be made in accordance with the GSA regulations governing inspection of records for this purpose, and any other relevant (i.e., GSA or Commerce) directive. Such disclosure shall not be used to make determinations about individuals.

8. A record from this system of records may be disclosed, as a routine use, to the public after either publication of the application pursuant to 35 U.S.C. 122(b) or issuance of a patent pursuant to 35 U.S.C. 151. Further, a record may be disclosed, subject to the limitations of 37 CFR 1.14, as a routine use, to the public if the record was filed in an application which became abandoned or in which the proceedings were terminated and which application is referenced by either a published application, an application open to public inspections or an issued patent.

9. A record from this system of records may be disclosed, as a routine use, to a Federal, State, or local law enforcement agency, if the USPTO becomes aware of a violation or potential violation of law or regulation.

UNITED STATES PATENT AND TRADEMARK OFFICE

Commissioner for Patents
United States Patent and Trademark Office
P.O. Box 1450
Alexandria, VA 22313-1450
www.uspto.gov

In re Patent No. 6516967
Issue Date: February 11,2003
Application No. 09879685
Filed: June 12,2001
Attorney Docket No.

:

:DECISION GRANTING PETITION
:UNDER 37 CFR 1.378(c)

:

This is a decision on the electronic petition, filed June 1,2007 ,under 37 CFR 1.378(c) to accept the unintentionally delayed payment of the 3.5 year maintenance fee for the above-identified patent.

The petition is GRANTED.

The maintenance fee is accepted, and the above-identified patent reinstated as of June 1,2007 . This decision also constitutes notice that the fee has been accepted. An electronic copy of the petition and this decision has been created as an entry in an Image File Wrapper. Nevertheless, petitioner should print and retain an independent copy

Telephone inquires related to this electronic decision should be directed to the Electronic Business Center at 1-866-217-9197.

UNITED STATES PATENT AND TRADEMARK OFFICE

COMMISSIONER FOR PATENTS
UNITED STATES PATENT AND TRADEMARK OFFICE
P.O. BOX 1450
ALEXANDRIA, VA 22313-1450
www.uspto.gov

MAR - 4 2004

MCKEE, VOORHEES & SEASE, P.L.C.
801 GRAND AVENUE
SUITE 3200
DES MOINES, IA 50309-2721

#14

In re Application of :
Bates et al. :
Serial No.: 09/879710 :WITHDRAWAL OF ABANDONMENT
Filed: June 12, 2001 :
Attorney Docket No.: P04852US0 :

This is in response to applicant's petition under 37 CFR 1.181, filed October 28, 2003, requesting withdrawal of the holding of abandonment. The delay in acting on this petition is regretted.

BACKGROUND

A review of our records shows that the Office mailed an Office Action on January 14, 2003, setting a shortened statutory period of 3 months for reply. On October 02, 2003, the Office mailed a Notice of Abandonment stating that no reply had been received. On October 28, 2003, applicants filed a Petition to request Withdrawal of Holding of Abandonment and a refund of the petition fee submitted is respectfully requested.

DISCUSSION

The file record and Petition have been considered carefully. The Petition states that on April 14, 2003, applicants timely faxed a copy of the Amendment and Response to Technology Center 1600, at the United States Patent and Trademarks Office.

Applicants provided a copy of the Certificate of mailing/transmission label faxed with applicants' timely response, including the stamp indicating a date of April 14, 2003. Applicants enclosed a copy of the Auto-Reply Facsimile Transmission with a fax date of April 14, 2003, to show that the response was timely.

DECISION

In view of applicants' timely response, the Petition has been **Granted**. The Holding of Abandonment has been withdrawn.

The Petition fee of $130.00 will be refunded.

The application will be forwarded to the examiner for consideration of the amendment and response filed April 14, 2003.

Should there be any questions with regard to this letter please contact Special Program Examiner Julie Burke by letter addressed to the Director, Technology Center 1600, PO Box 1450, Alexandria VA 22313-1450, or by telephone at (703) 308-7553 or by facsimile transmission at (703) 308-7230.

J Burke for
Bruce Kisliuk
Director, Technology Center 1600

fr

UNITED STATES PATENT AND TRADEMARK OFFICE

COMMISSIONER FOR PATENTS
UNITED STATES PATENT AND TRADEMARK OFFICE
WASHINGTON, D.C. 20231
www.uspto.gov

Paper No. 6

C. Steven McDaniel, Esq.
McDaniel & Associates, P.C.
P.O. Box 2244
Austin,TX 78768-2244

COPY MAILED

JUN 1 0 2002

OFFICE OF PETITIONS

In re Application of
Robert J. Christy et al.
Application No. 09/879,746
Filed: June 11, 2001
Attorney Docket No. GNTX-00100

DECISION REFUSING STATUS
UNDER 37 CFR 1.47(a)

This is in response to the petition under 37 CFR 1.47(a), filed on January 21, 2002 (certificate of mail date)[1].

The petition is **DISMISSED**.

Rule 47 applicant is given TWO MONTHS from the mailing date of this decision to respond, correcting the below-noted deficiencies. Any response should be entitled "Request for Reconsideration of Petition Under 37 CFR 1.47(a)" and **may** include an oath or declaration executed by the inventor. Failure to respond will result in abandonment of the application. Any extensions of time will be governed by 37 CFR 1.136(a).

The above-identified application was filed on June 11, 2001 naming Robert J. Christy, Yi-Chun J. Wang and Suzanne A.W. Fuqua as joint inventors but without an executed oath or declaration. Accordingly, on August 20, 2001, a "Notice To File Missing Parts of Application" was mailed, requiring an executed oath or declaration, a surcharge for its late filing and the requirements under 37 CFR 1.821-1.825 regarding Sequence Listings.

In response, on January 21, 2002 (certificate of mail date) petitioner filed, *inter alia*[2], the instant petition under 37 CFR 1.47(a), and (a) the required petition fee and surcharge for late filing; (b) a declaration signed by joint inventors Christy and Wang only; (c) the last known address of non-signing joint inventor Fuqua.

---

[1]A petition for extension of time under 37 CFR 1.136 (a) was timely filed on January 21, 2001.

[2]A computer readable form (CRF) copy of the "Sequence Listings" in compliance with 37 CFR 1.821-1.825 is submitted in response to the August 20, 2001 "Notice".

Petitioners assert, in a declaration by joint inventor, Robert J. Christy, that, "during the month of August 2001, I [Christy] forwarded the Inventor's Declaration and Assignment papers to joint inventor Suzanne Fuqua at 5410 Drakeview Court, Sugar Land, Texas 77479", and that .....Dr. Fuqua has presently refused to sign the Inventor's Declaration and Assignment papers which were forwarded to her at her last known address."

A grantable petition under 37 CFR 1.47(a) requires:

(1) proof that the non-signing inventor cannot be reached or refuses to sign the oath or declaration after having been presented with the application papers (specification, claims and drawings);

(2) an acceptable oath or declaration in compliance with 35 U.S.C. §§ 115 and 116;

(3) the petition fee; and

(4) a statement of the last known address of the non-signing inventor.

The instant petition lacks items (1). Petitioner has not provided sufficient details of the manner in which the application papers were presented to Suzanne A.W. Fuqua nor of the refusal to merit granting 37 CFR 1.47 status. If the refusal to sign was made orally, petitioner must provide details of the refusal in an affidavit or declaration. If the refusal was made in writing, petitioner must submit a copy of the written refusal.

Further correspondence with respect to this matter should be addressed as follows:

By mail: Assistant Commissioner for Patents
Box DAC
Washington, D.C. 20231

By FAX: (703) 308-6916
Attn: Office of Petitions

By hand: Crystal Plaza Four, Suite 3C23
2201 S. Clark Place
Arlington, VA

Telephone inquiries concerning this matter may be directed to the undersigned Petitions Attorney at (703)305-4497.

Patricia Faison-Ball

Patricia Faison-Ball
Senior Petitions Attorney
Office of Petitions
Office of the Deputy Commissioner
for Patent Examination Policy

UNITED STATES PATENT AND TRADEMARK OFFICE

Commissioner for Patents
United States Patent and Trademark Office
P. O. Box 1450
Alexandria, VA 22313-1450
www.uspto.gov

Paper No. 8

O'KEEFE EGAN & PETERMAN LLP
BUILDING C, SUITE 200
1101 CAPITAL OF TEXAS HIGHWAY SOUTH
AUSTIN, TX 78746

COPY MAILED

SEP 1 5 2003

OFFICE OF PETITIONS

In re Application of	:
Neal D. Hartsell et al	:DECISION ON PETITIONS
Application No. 09/879,809	:UNDER 37 CFR 1.181; 37
Filed: June 12, 2001	:CFR 1.183 AND 37 CFR
Attorney Docket No. SURG:151	:1.137(b)

This is a decision on the papers titled "Petition Concerning Notice of Foreign Filing a Foreign Application of a U.S. Patent Application For Which A Nonpublication Request Was Rescinded Under 35 USC 122(b)(2), " filed August 22, 2003. The petition is being treated as a petition under 37 CFR 1.181, 37 CFR 1.183, and 37 CFR 1.137(b).

The petition under 37 CFR 1.181 is **DISMISSED.**

The petition under 37 CFR 1.183 is **DISMISSED.**

The petition under 37 CFR 1.137(b) is **GRANTED**.

BACKGROUND

The above-identified application was filed on June 12, 2001. With the filing, applicants included a Request and Certification under 35 U.S.C. 122(b)(2)(B)(i) requesting that the application not be published. The nonpublication request reads:

> I hereby certify that the invention disclosed in the attached application **has not been and will not be** the subject of an application filed in another country, or under a multilateral agreement, that requires publication at eighteen months after filing. I hereby request that the attached application not be published under 35 U.S.C. 122(b). [Emphasis applicants.]

On November 2, 2001, applicants filed a counterpart international application relating to the subject matter of the above-identified application. Applicants provided the notice of the foreign filing as required by 35 U.S.C. § 122(b)(2)(B)(iii) and 37 CFR 1.213(c) when applicants filed this petition on August 22, 2003.

On January 4, 2002, applicants filed a Request to Rescind Nonpublication Request (35 U.S.C. § 122(b)(2)(B()(ii)), which bears a certificate of mailing date under 37 CFR 1.8 of October 18, 2001. This request stated that "I hereby rescind the previous request that the above-identified application not be published under 35 U.S.C. 122(b)." The rescission request does not make any mention of the fact that this application is, has been or will be the subject of an application filed in another country, or under a multilateral agreement, that requires publication at eighteen months after filing.

On August 22, 2003, applicants filed the instant petition and stated that the invention disclosed in the above-identified application was filed in a foreign country on November 2, 2001. From these dates, the notice of the foreign filing as required by 35 U.S.C. 122(b)(2)(B(iii) was not filed within 45 days after the date of filing of the international application.

STATUTE AND LEGISLATIVE HISTORY

35 U.S.C. (b)(2)(B) states, in pertinent part:

> (i) If an applicant makes a request upon filing, certifying that the invention disclosed in the application has not and will not be the subject of an application filed in another country, or under a multilateral international agreement, that requires publication of applications 18 months after filing, the application shall not be published as provided in paragraph (1).
>
> (ii) **An applicant may rescind a request made under clause (i) at any time.**
>
> (iii) An applicant who has made a request under clause (i) but who subsequently files, in a foreign country or under a multilateral international agreement specified in clause (i), an application directed to the invention disclosed in the application filed in the Patent and Trademark Office, shall notify the Director of such filing not later than 45 days after the date of

> the filing of such foreign or international application. **A failur of the applicant to provide such notice within the prescribed period shall result in the application being regarded as abandoned**, unless it is shown to the satisfaction of the Director that the delay in submitting the notice was unintentional.
>
> (iv) If an applicant rescinds a request made under clause (i) **or** notifies the Director that an application was filed in a foreign country or under a multilateral international agreement specified in clause (i), the application shall be published in accordance with the provisions of paragraph (1) on or as soon as is practical after the date that is specified in clause (i).[1]

The Congressional record explains that, if applicant has requested nonpublication because the application will not be filed "in a foreign country with a publication requirement, subparagraph (B)(iii) imposes a duty on the applicant to notify the Director of this fact. An unexcused failure to notify the Director will result in abandonment of the application." See 145 Cong. Rec. S14,718 (November 17, 1999).

PETITIONS UNDER 37 CFR 1.181 AND 1.183

Requested Relief under 37 CFR 1.181

As to the petition under **37 CFR 1.181**, applicants have requested that the foreign application filed by transmittal of PCT Application Serial No. PCT/US01/46114 by Express Mail on November 2, 2001, which included information identifying the above-captioned application by title, inventors, filing date and application number, be regarded as satisfying the notification of foreign filing requirements of 35 U.S.C. § 122(b)(2)(B)(iii).

Decision on Petition under 37 CFR 1.181

The argument that the filing of the PCT application satisfied the notification requirement of 35 U.S.C. § 122(b)(2)(B)(iii) of foreign filing is not persuasive. 37 CFR 1.213(c) requires the applicant to provide notice, and 37 CFR 1.4(b) provides that each application must be complete in itself. An international

---

[1] Emphasis added.

provides that each application must be complete in itself. An international application would not be placed into the file of an application that it relies upon for the benefit of an earlier filing date, and so applicant was required to file a separate paper pursuant to 37 CFR 1.4(b) in the above-identified application. Therefore, the mere filing of a PCT application is not the notification required by 35 U.S.C. § 122(b)(2)(B)(iii) and 37 CFR 1.213(c). Petitioner's attention is also directed to 37 CFR 1.4(c), which states:

> Since different matters may be considered by different branches or sections of the United States Patent and Trademark Office, each distinct subject, inquiry or order must be contained in a separate paper to avoid confusion and delay in answering papers dealing with different subjects.

Pursuant to 37 CFR 1.4(c), the separate paper was required to address a distinct subject. Therefore, since a notification of foreign filing was required to be on a separate paper, the filing of the PCT application did not serve as the notification of foreign filing required by 35 U.S.C. § 122(b)(2)(B)(iii). It should be noted that the USPTO acts in a distinctly separate capacity, and in a dedicated, separate part of the Office, when it acts as a Receiving Office for the filing of applications and papers under the PCT. Accordingly, as a review of the contents of the file of the above-identified application shows that no notification of the November 2, 2001 filing of the PCT application was filed within 45 days after the filing date of the PCT application, applicants' failure to provide such timely notice of the filing of the PCT application, pursuant to 35 U.S.C. § 122(b)(2)(B)(iii) and 37 CFR 1.213(c), caused the above-identified application to become abandoned by operation of law at midnight December 17, 2001.

Requested Relief under 37 CFR 1.183

Alternatively, applicants request suspension of the rules under **37 CFR 1.183** if the Office finds that the filing of the PCT application does not satisfy the notification of foreign filing requirements of 35 U.S.C. § 122(b)(2)(B)(iii). In this regard, applicants contend that, despite the fact that the request to rescind the nonpublication request was mailed via certificate of mailing 15 days (i.e., on October 18, 2001) prior to the filing of the PCT application on November 2, 2001, the request to rescind was not processed and stamped by the USPTO until January 4, 2002, 78 days after the mailing of the request. With regard to the period during which the mails were delayed due to the anthrax discovery, applicants make reference to a notice published in the Official Gazette with

requests like relief with regard to the request to rescind the nonpublication request received on January 4, 2002 in the USPTO.

Decision on Petition under 37 CFR 1.183

As noted above, the request to rescind the nonpublication request was mailed via certificate of mailing under 37 CFR 1.8 on October 18, 2001, which was not received and stamped into the USPTO until January 4, 2002, due to mail delays. However, the relief provided for by the notice published in the Official Gazette of October 9, 2001, applies only to correspondence deposited by Express Mail under 37 CFR 1.10 and does not apply to mail deposited by first class mail under 37 CFR 1.8. In this regard, applicants' attention is directed to 1251 Official Gazette 55, which states:

> Parties submitting correspondence to the USPTO are reminded that 37 CFR 1.8 (certificate of mailing or transmission practice) does not provide for according a filing date as of the date of deposit with the USPS to correspondence submitted under 37 CFR 1.8. Therefore, it would be inappropriate to file a petition under 37 CFR 1.183 or 2.146(a)(5) and 2.148 to waive the requirements of 37 CFR 1.8.

In view of the above, applicants cannot rely on the notice published in the Official Gazette as a means for the requested relief under 37 CFR 1.183.

Moreover, the Notice published in the Official Gazette of July 1, 2003 (1272 Official Gazette 1), regarding the USPTO's clarification and interpretation of the provisions of 35 U.S.C. 122(b)(2)(B)(ii)-(iv), stated, in pertinent part under "In Summary:"

> (3) If an applicant makes a nonpublication request and subsequently files a counterpart application in an eighteen-month publication country before the nonpublication request is rescinded, 35 U.S.C. 122(b)(2)(B)(iii) requires the applicant to notify the USPTO of the foreign filing not later than forty-five days after the date such counterpart application was filed to avoid abandonment of the application.
> (4) When an application is abandoned by operation of 35 U.S.C. 122(b)(2)(B)(iii) due to the failure to timely notify the USPTO of the filing of a counterpart application in an eighteen-month publication country, applicant's sole remedy to restore the

application to pending status is by filing a petition under 37 CFR 1.137(b) to revive the abandoned application.
(5) Applicants should also provide a notice of foreign filing when rescinding a nonpublication request in anticipation of filing a counterpart application in an eighteen-month publication country because no benefit is given to a certificate of mailing or transmission under 37 CFR 1.8 on a rescission of a nonpublication request in determining whether applicant has rescinded the nonpublication request before or on the date a counterpart application is filed in an eighteen-month publication country.

Here, applicants' request to rescind the nonpublication request was mailed via certificate of mailing practice under 37 CFR 1.8, to which no benefit can be given. Further, since the request to rescind was not received in the USPTO until January 4, 2002, and the request did not provide any notice of foreign filing, compliance with 35 U.S.C. § 122(b)(2)(B)(iii) has not been satisfied. The Office has no authority pursuant to 37 CFR 1.183 to treat a rescission under 35 U.S.C. § 122(b)(2)(ii) as the notice of foreign filing required by 35 U.S.C. § 122(b)(2)(B)(iii). In addition, the Office has no authority to waive the 45 day period set forth in 35 U.S.C. § 122(b)(2)(B)(iii). As a result thereof, the application must be regarded as abandoned by operation of law. These are statutory requirements and a statutory requirement cannot be waived under the provisions of 37 CFR 1.183.

Moreover, as noted in item (4), applicants herein have a suitable remedy on hand that does not require the extraordinary remedy of invoking 37 CFR 1.183. It is brought to petitioner's attention that the USPTO will not normally consider an extraordinary remedy when the rules already provide an avenue for obtaining the relief sought. See Cantello v. Rasmussen, 220 USPQ 664 (Comm'r Pat. 1982). Furthermore, a standard principle of statutory construction is: *expressio unius est exclusion alterius* (the mention of one thing implies exclusion of another thing); namely, absent legislative intent to the contrary, when a statute expressly provides a specific remedy for a specific situation, the statute is deemed to exclude other remedies for such situation. See National R.R. Passenger Corp. v. National Ass'n Of R.R. Passengers, 414 U.S. 453, 458 (1974); see also Botany Worsted Mills v. United States, 278 U.S. 282, 289 (1929)("when a statute limits a thing to be done in a particular mode, it includes the negative of any other mode"). Since Congress has provided in Public Laws 97-247 and 106-103 specific schemes for the revival of abandoned applications (*i.e.*, the

specific situations under which the PTO may revive an abandoned application and the specific requirements (fee amounts and standards) applicable to each specific situation), the creation of other schemes (e.g., the herein requested waiver of the rules under 37 CFR 1.183) for the revival of any abandoned application would be inconsistent with the patent statute. Thus, the Commissioner's authority to revive an abandoned application is limited to that specified in the statutory scheme set forth in 35 U.S.C. §§ 41(a)(7), 111, 122, 133, and 151. See Morganroth v. Quigg, 885 F.2d 843, 847, 12 USPQ2d 1125, 1128 (Fed. Cir. 1989)(the Commissioner lacks the authority to revive an application abandoned by termination of court proceedings because 35 U.S.C. §§ 41(a)(7), 133, or 151 do not provide for the revival of an application abandoned in such a manner).

PETITION UNDER 37 CFR 1.137(b)

Alternatively, applicants request revival of the instant application pursuant to the provisions of 37 CFR 1.137(b) for failure to timely notify the U.S. Patent and Trademark (USPTO) of the filing of an application in a foreign country, or under a multinational treaty that requires publication of applications eighteen months after filing. *See* 37 CFR 1.137(f).

Decision on Petition under 37 CFR 1.137(b)

As noted above, applicants stated in the petition that the instant nonprovisional application is the subject of a counterpart international application filed on November 2, 2001. However, the US Patent and Trademark Office was unintentionally not notified of this filing within 45 days subsequent to the filing of the international application.

In view of the above, this application became abandoned pursuant to 35 U.S.C. 122(b)(2)(B)(iii) and 37 CFR 1.213(c) for failure to timely notify the Office of the filing of an application in a foreign country, or under a multilateral international agreement, that requires publication of applications 18 months after filing.

A petition under 37 CFR 1.137(f) must be accompanied by:

(1) the reply, which is met by the notification of such filing in a foreign country or under a multinational treaty;
(2) the petition fee as set forth in 37 CFR 1.17(m); and

(3) a statement that the entire delay in filing the required

reply from the due date of the reply until the filing of a grantable petition was unintentional.

The instant petition has been found to be in compliance with 37 CFR 1.137(f). Accordingly, the failure to timely notify the Office of a foreign or international filing within 45 days after the date of filing of such foreign or international application as provided by 35 U.S.C. § 122(b)(2)(B)(iii) and 37 CFR 1.213(c) is accepted as having been unintentionally delayed.

Telephone inquiries regarding this decision should be directed to Frances Hicks at (703) 305-8680.

This application is being forwarded to Technology Center 2100 for examination in due course.

Brian Hearn

Brian Hearn
Senior Petitions Examiner
Office of Petitions
Office of the Deputy Commissioner
for Patent Examination Policy

Conferree: Joni Chang

UNITED STATES PATENT AND TRADEMARK OFFICE

Commissioner for Patents
United States Patent and Trademark Office
P. O. Box 1450
Alexandria, VA 22313-1450
www.uspto.gov

Paper No. 8

O'KEEFE EGAN & PETERMAN LLP
BUILDING C, SUITE 200
1101 CAPITAL OF TEXAS HIGHWAY SOUTH
AUSTIN, TX 78746

COPY MAILED

SEP 1 5 2003

OFFICE OF PETITIONS

In re Application of	:
Scott C. Johnson et al	:DECISION ON PETITIONS
Application No. 09/879,810	:UNDER 37 CFR 1.181; 37
Filed: June 12, 2001	:CFR 1.183 AND 37 CFR
Attorney Docket No. SURG:147	:1.137(b)

This is a decision on the papers titled "Petition Concerning Notice of Foreign Filing a Foreign Application of a U.S. Patent Application For Which A Nonpublication Request Was Rescinded Under 35 USC 122(b)(2), " filed August 22, 2003. The petition is being treated as a petition under 37 CFR 1.181, 37 CFR 1.183, and 37 CFR 1.137(b).

The petition under 37 CFR 1.181 is **DISMISSED.**

The petition under 37 CFR 1.183 is **DISMISSED.**

The petition under 37 CFR 1.137(b) is **GRANTED**.

BACKGROUND

The above-identified application was filed on June 12, 2001. With the filing, applicants included a Request and Certification under 35 U.S.C. 122(b)(2)(B)(i) requesting that the application not be published. The nonpublication request reads:

> I hereby certify that the invention disclosed in the attached application **has not been and will not be** the subject of an application filed in another country, or under a multilateral agreement, that requires publication at eighteen months after filing. I hereby request that the attached application not be published under 35 U.S.C. 122(b). [Emphasis applicants.]

On November 2, 2001, applicants filed a counterpart international application relating to the subject matter of the above-identified application. Applicants provided the notice of the foreign filing as required by 35 U.S.C. § 122(b)(2)(B)(iii) and 37 CFR 1.213(c) when applicants filed this petition on August 22, 2003.

On January 3, 2002, applicants filed a Request to Rescind Nonpublication Request (35 U.S.C. § 122(b)(2)(B()(ii)), which bears a certificate of mailing date under 37 CFR 1.8 of October 18, 2001. This request stated that "I hereby rescind the previous request that the above-identified application not be published under 35 U.S.C. 122(b)." The rescission request does not make any mention of the fact that this application is, has been or will be the subject of an application filed in another country, or under a multilateral agreement, that requires publication at eighteen months after filing.

On August 22, 2003, applicants filed the instant petition and stated that the invention disclosed in the above-identified application was filed in a foreign country on November 2, 2001. From these dates, the notice of the foreign filing as required by 35 U.S.C. 122(b)(2)(B(iii) was not filed within 45 days after the date of filing of the international application.

STATUTE AND LEGISLATIVE HISTORY

35 U.S.C. (b)(2)(B) states, in pertinent part:

> (i) If an applicant makes a request upon filing, certifying that the invention disclosed in the application has not and will not be the subject of an application filed in another country, or under a multilateral international agreement, that requires publication of applications 18 months after filing, the application shall not be published as provided in paragraph (1).
>
> (ii) **An applicant may rescind a request made under clause (i) at any time**.
>
> (iii) An applicant who has made a request under clause (i) but who subsequently files, in a foreign country or under a multilateral international agreement specified in clause (i), an application directed to the invention disclosed in the application filed in the Patent and Trademark Office, shall

> notify the Director of such filing not later than 45 days after the date of the filing of such foreign or international application. **A failure of the applicant to provide such notice within the prescribed period shall result in the application being regarded as abandoned**, unless it is shown to the satisfaction of the Director that the delay in submitting the notice was unintentional.
>
> (iv) If an applicant rescinds a request made under clause (i) **or** notifies the Director that an application was filed in a foreign country or under a multilateral international agreement specified in clause (i), the application shall be published in accordance with the provisions of paragraph (1) on or as soon as is practical after the date that is specified in clause (i).[1]

The Congressional record explains that, if applicant has requested nonpublication because the application will not be filed "in a foreign country with a publication requirement, subparagraph (B)(iii) imposes a duty on the applicant to notify the Director of this fact. An unexcused failure to notify the Director will result in abandonment of the application." See 145 Cong. Rec. S14,718 (November 17, 1999).

PETITIONS UNDER 37 CFR 1.181 AND 1.183

Requested Relief under 37 CFR 1.181

As to the petition under **37 CFR 1.181**, applicants have requested that the foreign application filed by transmittal of PCT Application Serial No. PCT/US01/45837 by Express Mail on November 2, 2001, which included information identifying the above-captioned application by title, inventors, filing date and application number, be regarded as satisfying the notification of foreign filing requirements of 35 U.S.C. § 122(b)(2)(B)(iii).

Decision on Petition under 37 CFR 1.181

The argument that the filing of the PCT application satisfied the notification requirement of 35 U.S.C. § 122(b)(2)(B)(iii) of foreign filing is not persuasive. 37 CFR 1.213(c) requires the applicant to provide notice, and 37 CFR 1.4(b)

---

[1] Emphasis added.

provides that each application must be complete in itself. An international application would not be placed into the file of an application that it relies upon for the benefit of an earlier filing date, and so applicant was required to file a separate paper pursuant to 37 CFR 1.4(b) in the above-identified application. Therefore, the mere filing of a PCT application is not the notification required by 35 U.S.C. § 122(b)(2)(B)(iii) and 37 CFR 1.213(c). Petitioner's attention is also directed to 37 CFR 1.4(c), which states:

> Since different matters may be considered by different branches or sections of the United States Patent and Trademark Office, each distinct subject, inquiry or order must be contained in a separate paper to avoid confusion and delay in answering papers dealing with different subjects.

Pursuant to 37 CFR 1.4(c), the separate paper was required to address a distinct subject. Therefore, since a notification of foreign filing was required to be on a separate paper, the filing of the PCT application did not serve as the notification of foreign filing required by 35 U.S.C. § 122(b)(2)(B)(iii). It should be noted that the USPTO acts in a distinctly separate capacity, and in a dedicated, separate part of the Office, when it acts as a Receiving Office for the filing of applications and papers under the PCT. Accordingly, as a review of the contents of the file of the above-identified application shows that no notification of the November 2, 2001 filing of the PCT application was filed within 45 days after the filing date of the PCT application, applicants' failure to provide such timely notice of the filing of the PCT application, pursuant to 35 U.S.C. § 122(b)(2)(B)(iii) and 37 CFR 1.213(c), caused the above-identified application to become abandoned by operation of law at midnight December 17, 2001.

Requested Relief under 37 CFR 1.183

Alternatively, applicants request suspension of the rules under **37 CFR 1.183** if the Office finds that the filing of the PCT application does not satisfy the notification of foreign filing requirements of 35 U.S.C. § 122(b)(2)(B)(iii). In this regard, applicants contend that, despite the fact that the request to rescind the nonpublication request was mailed via certificate of mailing 15 days (i.e., on October 18, 2001) prior to the filing of the PCT application on November 2, 2001, the request to rescind was not processed and stamped by the USPTO until January 3, 2002, 77 days after the mailing of the request. With regard to the period during which the mails were delayed due to the anthrax discovery, applicants make reference to a notice published in the Official Gazette with

regard to the postal service delays caused by increased security procedures related to the discovery of anthrax in a Washington, D.C. mail facility and requests like relief with regard to the request to rescind the nonpublication request received on January 3, 2002 in the USPTO.

Decision on Petition under 37 CFR 1.183

As noted above, the request to rescind the nonpublication request was mailed via certificate of mailing under 37 CFR 1.8 on October 18, 2001, which was not received and stamped into the USPTO until January 3, 2002, due to mail delays. However, the relief provided for by the notice published in the Official Gazette of October 9, 2001, applies only to correspondence deposited by Express Mail under 37 CFR 1.10 and does not apply to mail deposited by first class mail under 37 CFR 1.8. In this regard, applicants' attention is directed to 1251 Official Gazette 55, which states:

> Parties submitting correspondence to the USPTO are reminded that 37 CFR 1.8 (certificate of mailing or transmission practice) does not provide for according a filing date as of the date of deposit with the USPS to correspondence submitted under 37 CFR 1.8. Therefore, it would be inappropriate to file a petition under 37 CFR 1.183 or 2.146(a)(5) and 2.148 to waive the requirements of 37 CFR 1.8.

In view of the above, applicants cannot rely on the notice published in the Official Gazette as a means for the requested relief under 37 CFR 1.183.

Moreover, the Notice published in the Official Gazette of July 1, 2003 (1272 Official Gazette 1), regarding the USPTO's clarification and interpretation of the provisions of 35 U.S.C. 122(b)(2)(B)(ii)-(iv), stated, in pertinent part under "In Summary:"

> (3) If an applicant makes a nonpublication request and subsequently files a counterpart application in an eighteen-month publication country before the nonpublication request is rescinded, 35 U.S.C. 122(b)(2)(B)(iii) requires the applicant to notify the USPTO of the foreign filing not later than forty-five days after the date such counterpart application was filed to avoid abandonment of the application.
> (4) When an application is abandoned by operation of 35 U.S.C.

> 122(b)(2)(B)(iii) due to the failure to timely notify the USPTO of the filing of a counterpart application in an eighteen-month publication country, applicant's sole remedy to restore the application to pending status is by filing a petition under 37 CFR 1.137(b) to revive the abandoned application.
> (5) Applicants should also provide a notice of foreign filing when rescinding a nonpublication request in anticipation of filing a counterpart application in an eighteen-month publication country because no benefit is given to a certificate of mailing or transmission under 37 CFR 1.8 on a rescission of a nonpublication request in determining whether applicant has rescinded the nonpublication request before or on the date a counterpart application is filed in an eighteen-month publication country.

Here, applicants' request to rescind the nonpublication request was mailed via certificate of mailing practice under 37 CFR 1.8, to which no benefit can be given. Further, since the request to rescind was not received in the USPTO until January 3, 2002, and the request did not provide any notice of foreign filing, compliance with 35 U.S.C. § 122(b)(2)(B)(iii) has not been satisfied. The Office has no authority pursuant to 37 CFR 1.183 to treat a rescission under 35 U.S.C. § 122(b)(2)(ii) as the notice of foreign filing required by 35 U.S.C. § 122(b)(2)(B)(iii). In addition, the Office has no authority to waive the 45 day period set forth in 35 U.S.C. § 122(b)(2)(B)(iii). As a result thereof, the application must be regarded as abandoned by operation of law. These are statutory requirements and a statutory requirement cannot be waived under the provisions of 37 CFR 1.183.

Moreover, as noted in item (4), applicants herein have a suitable remedy on hand that does not require the extraordinary remedy of invoking 37 CFR 1.183. It is brought to petitioner's attention that the USPTO will not normally consider an extraordinary remedy when the rules already provide an avenue for obtaining the relief sought. See Cantello v. Rasmussen, 220 USPQ 664 (Comm'r Pat. 1982). Furthermore, a standard principle of statutory construction is: *expressio unius est exclusion alterius* (the mention of one thing implies exclusion of another thing); namely, absent legislative intent to the contrary, when a statute expressly provides a specific remedy for a specific situation, the statute is deemed to exclude other remedies for such situation. See National R.R. Passenger Corp. v. National Ass'n Of R.R. Passengers, 414 U.S. 453, 458 (1974); see also Botany Worsted Mills v. United States, 278 U.S.

282, 289 (1929)("when a statute limits a thing to be done in a particular mode, it includes the negative of any other mode"). Since Congress has provided in Public Laws 97-247 and 106-103 specific schemes for the revival of abandoned applications (*i.e.*, the specific situations under which the PTO may revive an abandoned application and the specific requirements (fee amounts and standards) applicable to each specific situation), the creation of other schemes (e.g., the herein requested waiver of the rules under 37 CFR 1.183) for the revival of any abandoned application would be inconsistent with the patent statute. Thus, the Commissioner's authority to revive an abandoned application is limited to that specified in the statutory scheme set forth in 35 U.S.C. §§ 41(a)(7), 111, 122, 133, and 151. See Morganroth v. Quigg, 885 F.2d 843, 847, 12 USPQ2d 1125, 1128 (Fed. Cir. 1989)(the Commissioner lacks the authority to revive an application abandoned by termination of court proceedings because 35 U.S.C. §§ 41(a)(7), 133, or 151 do not provide for the revival of an application abandoned in such a manner).

PETITION UNDER 37 CFR 1.137(b)

Alternatively, applicants request revival of the instant application pursuant to the provisions of 37 CFR 1.137(b) for failure to timely notify the U.S. Patent and Trademark (USPTO) of the filing of an application in a foreign country, or under a multinational treaty that requires publication of applications eighteen months after filing. *See* 37 CFR 1.137(f).

Decision on Petition under 37 CFR 1.137(b)

As noted above, applicants stated in the petition that the instant nonprovisional application is the subject of a counterpart international application filed on November 2, 2001. However, the US Patent and Trademark Office was unintentionally not notified of this filing within 45 days subsequent to the filing of the international application.

In view of the above, this application became abandoned pursuant to 35 U.S.C. 122(b)(2)(B)(iii) and 37 CFR 1.213(c) for failure to timely notify the Office of the filing of an application in a foreign country, or under a multilateral international agreement, that requires publication of applications 18 months after filing.

A petition under 37 CFR 1.137(f) must be accompanied by:

(1) the reply, which is met by the notification of such filing in a foreign country or under a multinational treaty;
(2) the petition fee as set forth in 37 CFR 1.17(m); and

(3) a statement that the entire delay in filing the required reply from the due date of the reply until the filing of a grantable petition was unintentional.

The instant petition has been found to be in compliance with 37 CFR 1.137(f). Accordingly, the failure to timely notify the Office of a foreign or international filing within 45 days after the date of filing of such foreign or international application as provided by 35 U.S.C. § 122(b)(2)(B)(iii) and 37 CFR 1.213(c) is accepted as having been unintentionally delayed.

Telephone inquiries regarding this decision should be directed to Frances Hicks at (703) 305-8680.

This application is being forwarded to Technology Center 2100 for examination in due course.

Frances Hicks for
Brian Hearn
Senior Petitions Examiner
Office of Petitions
Office of the Deputy Commissioner
for Patent Examination Policy

UNITED STATES PATENT AND TRADEMARK OFFICE

UNITED STATES DEPARTMENT OF COMMERCE
United States Patent and Trademark Office
Address: COMMISSIONER FOR PATENTS
P.O. Box 1450
Alexandria, Virginia 22313-1450
www.uspto.gov

APPLICATION NO.	FILING DATE	FIRST NAMED INVENTOR	ATTORNEY DOCKET NO.	CONFIRMATION NO.
09/879,811	06/12/2001	Scott C. Johnson	SURG:148	3704

7590 03/11/2005

O'KEEFE, EGAN & PETERMAN, L.L.P.
Building C, Suite 200
1101 Capital of Texas Highway South
Austin, TX 78746

DATE MAILED: 03/11/2005

Please find below and/or attached an Office communication concerning this application or proceeding.

This is a decision on the papers titled "Petition Concerning Notice of Foreign Filing a Foreign Application of a U.S. Patent Application For Which A Nonpublication Request Was Rescinded Under 35 USC 122(b)(2), " filed August 22, 2003. The petition is being treated as a petition under 37 CFR 1.181, 37 CFR 1.183, and 37 CFR 1.137(b).

The petition under 37 CFR 1.181 is **DISMISSED.**

The petition under 37 CFR 1.183 is **DISMISSED.**

The petition under 37 CFR 1.137(b) is **GRANTED**.

BACKGROUND

The above-identified application was filed on June 12, 2001. With the filing, applicants included a Request and Certification under 35 U.S.C. 122(b)(2)(B)(i) requesting that the application not be published. The nonpublication request reads:

> I hereby certify that the invention disclosed in the attached application **has not been and will not be** the subject of an application filed in another country, or under a multilateral agreement, that requires publication at eighteen months after filing. I hereby request that the attached application not be published under 35 U.S.C. 122(b). [Emphasis applicants.]

On November 2, 2001, applicants filed a counterpart international application relating to the subject matter of the above-identified application. Applicants provided the notice of the foreign filing as required by 35 U.S.C. § 122(b)(2)(B)(iii) and 37 CFR 1.213(c) when applicants filed this petition on August 22, 2003.

On January 3, 2002, applicants filed a Request to Rescind Nonpublication Request (35 U.S.C. § 122(b)(2)(B)(ii)), which bears a certificate of mailing date under 37 CFR 1.8 of October 18, 2001. This request stated that "I hereby rescind the previous request that the above-identified application not be published under 35 U.S.C. 122(b)." The rescission request does not make any mention of the fact that this application is, has been or will be the subject of an

application filed in another country, or under a multilateral agreement, that requires publication at eighteen months after filing.

On August 22, 2003, applicants filed the instant petition and stated that the invention disclosed in the above-identified application was filed in a foreign country on November 2, 2001. From these dates, the notice of the foreign filing as required by 35 U.S.C. 122(b)(2)(B(iii) was not filed within 45 days after the date of filing of the international application.

STATUTE AND LEGISLATIVE HISTORY

35 U.S.C. (b)(2)(B) states, in pertinent part:

> (i) If an applicant makes a request upon filing, certifying that the invention disclosed in the application has not and will not be the subject of an application filed in another country, or under a multilateral international agreement, that requires publication of applications 18 months after filing, the application shall not be published as provided in paragraph (1).
>
> (ii) **An applicant may rescind a request made under clause (i) at any time**.
>
> (iii) An applicant who has made a request under clause (i) but who subsequently files, in a foreign country or under a multilateral international agreement specified in clause (i), an application directed to the invention disclosed in the application filed in the Patent and Trademark Office, shall notify the Director of such filing not later than 45 days after the date of the filing of such foreign or international application. **A failure of the applicant to provide such notice within the prescribed period shall result in the application being regarded as abandoned**, unless it is shown to the satisfaction of the Director that the delay in submitting the notice was unintentional.
>
> (iv) If an applicant rescinds a request made under clause (i) **or** notifies the Director that an application was filed in a foreign country or under a multilateral international agreement specified in clause (i), the application shall be published in

> accordance with the provisions of paragraph (1) on or as soon as is practical after the date that is specified in clause (i).[1]

The Congressional record explains that, if applicant has requested nonpublication because the application will not be filed "in a foreign country with a publication requirement, subparagraph (B)(iii) imposes a duty on the applicant to notify the Director of this fact. An unexcused failure to notify the Director will result in abandonment of the application." See 145 Cong. Rec. S14,718 (November 17, 1999).

PETITIONS UNDER 37 CFR 1.181 AND 1.183

Requested Relief under 37 CFR 1.181

As to the petition under **37 CFR 1.181**, applicants have requested that the foreign application filed by transmittal of PCT Application Serial No. PCT/US01/45691 by Express Mail on November 2, 2001, which included information identifying the above-captioned application by title, inventors, filing date and application number, be regarded as satisfying the notification of foreign filing requirements of 35 U.S.C. § 122(b)(2)(B)(iii).

Decision on Petition under 37 CFR 1.181

The argument that the filing of the PCT application satisfied the notification requirement of 35 U.S.C. § 122(b)(2)(B)(iii) of foreign filing is not persuasive. 37 CFR 1.213(c) requires the applicant to provide notice, and 37 CFR 1.4(b) provides that each application must be complete in itself. An international application would not be placed into the file of an application that it relies upon for the benefit of an earlier filing date, and so applicant was required to file a separate paper pursuant to 37 CFR 1.4(b) in the above-identified application. Therefore, the mere filing of a PCT application is not the notification required by 35 U.S.C. § 122(b)(2)(B)(iii) and 37 CFR 1.213(c). Petitioner's attention is also directed to 37 CFR 1.4(c), which states:

> Since different matters may be considered by different branches or sections of the United States Patent and Trademark Office, each distinct subject, inquiry or order must

---

[1] Emphasis added.

> be contained in a separate paper to avoid confusion and delay in answering papers dealing with different subjects.

Pursuant to 37 CFR 1.4(c), the separate paper was required to address a distinct subject. Therefore, since a notification of foreign filing was required to be on a separate paper, the filing of the PCT application did not serve as the notification of foreign filing required by 35 U.S.C. § 122(b)(2)(B)(iii). It should be noted that the USPTO acts in a distinctly separate capacity, and in a dedicated, separate part of the Office, when it acts as a Receiving Office for the filing of applications and papers under the PCT. Accordingly, as a review of the contents of the file of the above-identified application shows that no notification of the November 2, 2001 filing of the PCT application was filed within 45 days after the filing date of the PCT application, applicants' failure to provide such timely notice of the filing of the PCT application, pursuant to 35 U.S.C. § 122(b)(2)(B)(iii) and 37 CFR 1.213(c), caused the above-identified application to become abandoned by operation of law at midnight December 17, 2001.

Requested Relief under 37 CFR 1.183

Alternatively, applicants request suspension of the rules under **37 CFR 1.183** if the Office finds that the filing of the PCT application does not satisfy the notification of foreign filing requirements of 35 U.S.C. § 122(b)(2)(B)(iii). In this regard, applicants contend that, despite the fact that the request to rescind the nonpublication request was mailed via certificate of mailing 15 days (i.e., on October 18, 2001), prior to the filing of the PCT application on November 2, 2001, the request to rescind was not processed and stamped by the USPTO until January 3, 2002, or 77 days after the mailing of the request. With regard to the period during which the mails were delayed due to the anthrax discovery, applicants make reference to a notice published in the Official Gazette with regard to the postal service delays caused by increased security procedures related to the discovery of anthrax in a Washington, D.C. mail facility and requests like relief with regard to the request to rescind the nonpublication request received on January 3, 2002 in the USPTO.

Decision on Petition under 37 CFR 1.183

As noted above, the request to rescind the nonpublication request was mailed via certificate of mailing under 37 CFR 1.8 on October 18, 2001, which was not received and stamped into the USPTO until January 3, 2002, due to mail delays. However, the relief provided for by the notice published in the Official

Gazette of October 9, 2001, applies only to correspondence deposited by Express Mail under 37 CFR 1.10 and does not apply to mail deposited by first class mail under 37 CFR 1.8. In this regard, applicants' attention is directed to 1251 Official Gazette 55, which states:

> Parties submitting correspondence to the USPTO are reminded that 37 CFR 1.8 (certificate of mailing or transmission practice) does not provide for according a filing date as of the date of deposit with the USPS to correspondence submitted under 37 CFR 1.8. Therefore, it would be inappropriate to file a petition under 37 CFR 1.183 or 2.146(a)(5) and 2.148 to waive the requirements of 37 CFR 1.8.

In view of the above, applicants cannot rely on the notice published in the Official Gazette as a means for the requested relief under 37 CFR 1.183.

Moreover, the Notice published in the Official Gazette of July 1, 2003 (1272 Official Gazette 1), regarding the USPTO's clarification and interpretation of the provisions of 35 U.S.C. 122(b)(2)(B)(ii)-(iv), stated, in pertinent part under "In Summary:"

> (3) If an applicant makes a nonpublication request and subsequently files a counterpart application in an eighteen-month publication country before the nonpublication request is rescinded, 35 U.S.C. 122(b)(2)(B)(iii) requires the applicant to notify the USPTO of the foreign filing not later than forty-five days after the date such counterpart application was filed to avoid abandonment of the application.
> (4) When an application is abandoned by operation of 35 U.S.C. 122(b)(2)(B)(iii) due to the failure to timely notify the USPTO of the filing of a counterpart application in an eighteen-month publication country, applicant's sole remedy to restore the application to pending status is by filing a petition under 37 CFR 1.137(b) to revive the abandoned application.
> (5) Applicants should also provide a notice of foreign filing when rescinding a nonpublication request in anticipation of filing a counterpart application in an eighteen-month publication country because no benefit is given to a certificate of mailing or transmission under 37 CFR 1.8 on a rescission of a nonpublication request in determining whether applicant has

> rescinded the nonpublication request before or on the date a counterpart application is filed in an eighteen-month publication country.

Here, applicants' request to rescind the nonpublication request was mailed via certificate of mailing practice under 37 CFR 1.8, to which no benefit can be given. Further, since the request to rescind was not received in the USPTO until January 3, 2002, and the request did not provide any notice of foreign filing, compliance with 35 U.S.C. § 122(b)(2)(B)(iii) has not been satisfied. The Office has no authority pursuant to 37 CFR 1.183 to treat a rescission under 35 U.S.C. § 122(b)(2)(ii) as the notice of foreign filing required by 35 U.S.C. § 122(b)(2)(B)(iii). In addition, the Office has no authority to waive the 45 day period set forth in 35 U.S.C. § 122(b)(2)(B)(iii). As a result thereof, the application must be regarded as abandoned by operation of law. These are statutory requirements and a statutory requirement cannot be waived under the provisions of 37 CFR 1.183.

Moreover, as noted in item (4), applicants herein have a suitable remedy on hand that does not require the extraordinary remedy of invoking 37 CFR 1.183. It is brought to petitioner's attention that the USPTO will not normally consider an extraordinary remedy when the rules already provide an avenue for obtaining the relief sought. See Cantello v. Rasmussen, 220 USPQ 664 (Comm'r Pat. 1982). Furthermore, a standard principle of statutory construction is: *expressio unius est exclusion alterius* (the mention of one thing implies exclusion of another thing); namely, absent legislative intent to the contrary, when a statute expressly provides a specific remedy for a specific situation, the statute is deemed to exclude other remedies for such situation. See National R.R. Passenger Corp. v. National Ass'n Of R.R. Passengers, 414 U.S. 453, 458 (1974); see also Botany Worsted Mills v. United States, 278 U.S. 282, 289 (1929)("when a statute limits a thing to be done in a particular mode, it includes the negative of any other mode"). Since Congress has provided in Public Laws 97-247 and 106-103 specific schemes for the revival of abandoned applications (*i.e.*, the specific situations under which the USPTO may revive an abandoned application and the specific requirements (fee amounts and standards) applicable to each specific situation), the creation of other schemes (e.g., the herein requested waiver of the rules under 37 CFR 1.183) for the revival of any abandoned application would be inconsistent with the patent statute. Thus, the Commissioner's authority to revive an abandoned application is limited to that specified in the statutory scheme set forth in 35 U.S.C. §§ 41(a)(7), 111, 122, 133, and 151. See Morganroth v. Quigg, 885 F.2d

843, 847, 12 USPQ2d 1125, 1128 (Fed. Cir. 1989)(the Commissioner lacks the authority to revive an application abandoned by termination of court proceedings because 35 U.S.C. §§ 41(a)(7), 133, or 151 do not provide for the revival of an application abandoned in such a manner).

PETITION UNDER 37 CFR 1.137(b)

Alternatively, applicants request revival of the instant application pursuant to the provisions of 37 CFR 1.137(b) for failure to timely notify the U.S. Patent and Trademark (USPTO) of the filing of an application in a foreign country, or under a multinational treaty that requires publication of applications eighteen months after filing. *See* 37 CFR 1.137(f).

Decision on Petition under 37 CFR 1.137(b)

As noted above, applicants stated in the petition that the instant nonprovisional application is the subject of a counterpart international application filed on November 2, 2001. However, the USPTO was unintentionally not notified of this filing within 45 days subsequent to the filing of the international application.

In view of the above, this application became abandoned pursuant to 35 U.S.C. 122(b)(2)(B)(iii) and 37 CFR 1.213(c) for failure to timely notify the Office of the filing of an application in a foreign country, or under a multilateral international agreement, that requires publication of applications 18 months after filing.

A petition under 37 CFR 1.137(f) must be accompanied by:

> (1) the reply, which is met by the notification of such filing in a foreign country or under a multinational treaty;
> (2) the petition fee as set forth in 37 CFR 1.17(m); and
>
> (3) a statement that the entire delay in filing the required reply from the due date of the reply until the filing of a grantable petition was unintentional.

The instant petition has been found to be in compliance with 37 CFR 1.137(f). Accordingly, the failure to timely notify the Office of a foreign or international filing within 45 days after the date of filing of such foreign or international

application as provided by 35 U.S.C. § 122(b)(2)(B)(iii) and 37 CFR 1.213(c) is accepted as having been unintentionally delayed.

There is no indication that a reply to the nonfinal Office action of October 15, 2004 has been filed. Accordingly, a shortened statutory period of three (3) months for reply to the nonfinal Office action of October 15, 2004 is restarted with the mailing date of this decision. Extensions of time pursuant to the provisions of 37 CFR 1.136(a) are permitted. Failure to timely reply within the period restarted by this decision will again result in the abandonment of this application.

Telephone inquiries regarding this decision should be directed to Frances Hicks at (571) 272-3218.

This application is being forwarded to Technology Center AU 2143 to await a reply to the October 15, 2004 nonfinal Office action, **the period of which is restarted to run from the mailing date of this decision on petition as noted above.**

Frances Hicks for
Brian Hearn
Senior Petitions Examiner
Office of Petitions
Office of the Deputy Commissioner
for Patent Examination Policy

UNITED STATES PATENT AND TRADEMARK OFFICE

Commissioner for Patents
United States Patent and Trademark Office
P. O. Box 1450
Alexandria, VA 22313-1450
www.uspto.gov

Paper No. 12

O'KEEFE EGAN & PETERMAN LLP
BUILDING C, SUITE 200
1101 CAPITAL OF TEXAS HIGHWAY SOUTH
AUSTIN, TX 78746

COPY MAILED

SEP 15 2003

OFFICE OF PETITIONS

In re Application of	:
Neal Hartsell, et al.	:DECISION ON PETITIONS
Application No. 09/879,812	:UNDER 37 CFR 1.181; 37
Filed: June 12, 2001	:CFR 1.183 AND 37 CFR
Attorney Docket No. SURG:150	:1.137(b)

This is a decision on the papers titled "Petition Concerning Notice of Foreign Filing a Foreign Application of a U.S. Patent Application For Which A Nonpublication Request Was Rescinded Under 35 USC 122(b)(2), " filed August 22, 2003. The petition is being treated as a petition under 37 CFR 1.181, 37 CFR 1.183, and 37 CFR 1.137(b).

The petition under 37 CFR 1.181 is **DISMISSED.**

The petition under 37 CFR 1.183 is **DISMISSED.**

The petition under 37 CFR 1.137(b) is **GRANTED**.

BACKGROUND

The above-identified application was filed on June 12, 2001. With the filing, applicants included a Request and Certification under 35 U.S.C. 122(b)(2)(B)(i) requesting that the application not be published. The nonpublication request reads:

> I hereby certify that the invention disclosed in the attached application **has not been and will not be** the subject of an application filed in another country, or under a multilateral agreement, that requires publication at eighteen months after filing. I hereby request that the attached application not be published under 35 U.S.C. 122(b). [Emphasis applicants.]

On November 2, 2001, applicants filed a counterpart international application relating to the subject matter of the above-identified application. Applicants provided the notice of the foreign filing as required by 35 U.S.C. § 122(b)(2)(B)(iii) and 37 CFR 1.213(c) when applicants filed this petition on August 22, 2003.

On January 3, 2002, applicants filed a Request to Rescind Nonpublication Request (35 U.S.C. § 122(b)(2)(B()(ii)), which bears a certificate of mailing date under 37 CFR 1.8 of October 18, 2001. This request stated that "I hereby rescind the previous request that the above-identified application not be published under 35 U.S.C. 122(b)." The rescission request does not make any mention of the fact that this application is, has been or will be the subject of an application filed in another country, or under a multilateral agreement, that requires publication at eighteen months after filing.

On August 22, 2003, applicants filed the instant petition and stated that the invention disclosed in the above-identified application was filed in a foreign country on November 2, 2001. From these dates, the notice of the foreign filing as required by 35 U.S.C. 122(b)(2)(B(iii) was not filed within 45 days after the date of filing of the international application.

STATUTE AND LEGISLATIVE HISTORY

35 U.S.C. (b)(2)(B) states, in pertinent part:

> (i) If an applicant makes a request upon filing, certifying that the invention disclosed in the application has not and will not be the subject of an application filed in another country, or under a multilateral international agreement, that requires publication of applications 18 months after filing, the application shall not be published as provided in paragraph (1).
>
> (ii) **An applicant may rescind a request made under clause (i) at any time**.
>
> (iii) An applicant who has made a request under clause (i) but who subsequently files, in a foreign country or under a multilateral international agreement specified in clause (i), an application directed to the invention disclosed in the application filed in the Patent and Trademark Office, shall

> notify the Director of such filing not later than 45 days after the date of the filing of such foreign or international application. **A failure of the applicant to provide such notice within the prescribed period shall result in the application being regarded as abandoned**, unless it is shown to the satisfaction of the Director that the delay in submitting the notice was unintentional.
>
> (iv) If an applicant rescinds a request made under clause (i) **or** notifies the Director that an application was filed in a foreign country or under a multilateral international agreement specified in clause (i), the application shall be published in accordance with the provisions of paragraph (1) on or as soon as is practical after the date that is specified in clause (i).[1]

The Congressional record explains that, if applicant has requested nonpublication because the application will not be filed "in a foreign country with a publication requirement, subparagraph (B)(iii) imposes a duty on the applicant to notify the Director of this fact. An unexcused failure to notify the Director will result in abandonment of the application." See 145 Cong. Rec. S14,718 (November 17, 1999).

PETITIONS UNDER 37 CFR 1.181 AND 1.183

Requested Relief under 37 CFR 1.181

As to the petition under **37 CFR 1.181**, applicants have requested that the foreign application filed by transmittal of PCT Application Serial No. PCT/US01/46218 by Express Mail on November 2, 2001, which included information identifying the above-captioned application by title, inventors, filing date and application number, be regarded as satisfying the notification of foreign filing requirements of 35 U.S.C. § 122(b)(2)(B)(iii).

Decision on Petition under 37 CFR 1.181

The argument that the filing of the PCT application satisfied the notification requirement of 35 U.S.C. § 122(b)(2)(B)(iii) of foreign filing is not persuasive. 37 CFR 1.213(c) requires the applicant to provide notice, and 37 CFR 1.4(b)

---

[1] Emphasis added.

provides that each application must be complete in itself. An international application would not be placed into the file of an application that it relies upon for the benefit of an earlier filing date, and so applicant was required to file a separate paper pursuant to 37 CFR 1.4(b) in the above-identified application. Therefore, the mere filing of a PCT application is not the notification required by 35 U.S.C. § 122(b)(2)(B)(iii) and 37 CFR 1.213(c). Petitioner's attention is also directed to 37 CFR 1.4(c), which states:

> Since different matters may be considered by different branches or sections of the United States Patent and Trademark Office, each distinct subject, inquiry or order must be contained in a separate paper to avoid confusion and delay in answering papers dealing with different subjects.

Pursuant to 37 CFR 1.4(c), the separate paper was required to address a distinct subject. Therefore, since a notification of foreign filing was required to be on a separate paper, the filing of the PCT application did not serve as the notification of foreign filing required by 35 U.S.C. § 122(b)(2)(B)(iii). It should be noted that the USPTO acts in a distinctly separate capacity, and in a dedicated, separate part of the Office, when it acts as a Receiving Office for the filing of applications and papers under the PCT. Accordingly, as a review of the contents of the file of the above-identified application shows that no notification of the November 2, 2001 filing of the PCT application was filed within 45 days after the filing date of the PCT application, applicants' failure to provide such timely notice of the filing of the PCT application, pursuant to 35 U.S.C. § 122(b)(2)(B)(iii) and 37 CFR 1.213(c), caused the above-identified application to become abandoned by operation of law at midnight December 17, 2001.

Requested Relief under 37 CFR 1.183

Alternatively, applicants request suspension of the rules under **37 CFR 1.183** if the Office finds that the filing of the PCT application does not satisfy the notification of foreign filing requirements of 35 U.S.C. § 122(b)(2)(B)(iii). In this regard, applicants contend that, despite the fact that the request to rescind the nonpublication request was mailed via certificate of mailing 15 days (i.e., on October 18, 2001 prior to the filing of the PCT application on November 2, 2001, the request to rescind was not processed and stamped by the USPTO until January 3, 2002, 77 days after the mailing of the request. With regard to the period during which the mails were delayed due to the anthrax discovery, applicants make reference to a notice published in the Official Gazette with

regard to the postal service delays caused by increased security procedures related to the discovery of anthrax in a Washington, D.C. mail facility and requests like relief with regard to the request to rescind the nonpublication request received on January 3, 2002 in the USPTO.

Decision on Petition under 37 CFR 1.183

As noted above, the request to rescind the nonpublication request was mailed via certificate of mailing under 37 CFR 1.8 on October 18, 2001, which was not received and stamped into the USPTO until January 3, 2002, due to mail delays. However, the relief provided for by the notice published in the Official Gazette of October 9, 2001, applies only to correspondence deposited by Express Mail under 37 CFR 1.10 and does not apply to mail deposited by first class mail under 37 CFR 1.8. In this regard, applicants' attention is directed to 1251 Official Gazette 55, which states:

> Parties submitting correspondence to the USPTO are reminded that 37 CFR 1.8 (certificate of mailing or transmission practice) does not provide for according a filing date as of the date of deposit with the USPS to correspondence submitted under 37 CFR 1.8. Therefore, it would be inappropriate to file a petition under 37 CFR 1.183 or 2.146(a)(5) and 2.148 to waive the requirements of 37 CFR 1.8.

In view of the above, applicants cannot rely on the notice published in the Official Gazette as a means for the requested relief under 37 CFR 1.183.

Moreover, the Notice published in the Official Gazette of July 1, 2003 (1272 Official Gazette 1), regarding the USPTO's clarification and interpretation of the provisions of 35 U.S.C. 122(b)(2)(B)(ii)-(iv), stated, in pertinent part under "In Summary:"

> (3) If an applicant makes a nonpublication request and subsequently files a counterpart application in an eighteen-month publication country before the nonpublication request is rescinded, 35 U.S.C. 122(b)(2)(B)(iii) requires the applicant to notify the USPTO of the foreign filing not later than forty-five days after the date such counterpart application was filed to avoid abandonment of the application.
> (4) When an application is abandoned by operation of 35 U.S.C.

> 122(b)(2)(B)(iii) due to the failure to timely notify the USPTO of the filing of a counterpart application in an eighteen-month publication country, applicant's sole remedy to restore the application to pending status is by filing a petition under 37 CFR 1.137(b) to revive the abandoned application.
> (5) Applicants should also provide a notice of foreign filing when rescinding a nonpublication request in anticipation of filing a counterpart application in an eighteen-month publication country because no benefit is given to a certificate of mailing or transmission under 37 CFR 1.8 on a rescission of a nonpublication request in determining whether applicant has rescinded the nonpublication request before or on the date a counterpart application is filed in an eighteen-month publication country.

Here, applicants' request to rescind the nonpublication request was mailed via certificate of mailing practice under 37 CFR 1.8, to which no benefit can be given. Further, since the request to rescind was not received in the USPTO until January 3, 2002, and the request did not provide any notice of foreign filing, compliance with 35 U.S.C. § 122(b)(2)(B)(iii) has not been satisfied. The Office has no authority pursuant to 37 CFR 1.183 to treat a rescission under 35 U.S.C. § 122(b)(2)(ii) as the notice of foreign filing required by 35 U.S.C. § 122(b)(2)(B)(iii). In addition, the Office has no authority to waive the 45 day period set forth in 35 U.S.C. § 122(b)(2)(B)(iii). As a result thereof, the application must be regarded as abandoned by operation of law. These are statutory requirements and a statutory requirement cannot be waived under the provisions of 37 CFR 1.183.

Moreover, as noted in item (4), applicants herein have a suitable remedy on hand that does not require the extraordinary remedy of invoking 37 CFR 1.183. It is brought to petitioner's attention that the USPTO will not normally consider an extraordinary remedy when the rules already provide an avenue for obtaining the relief sought. See Cantello v. Rasmussen, 220 USPQ 664 (Comm'r Pat. 1982). Furthermore, a standard principle of statutory construction is: *expressio unius est exclusion alterius* (the mention of one thing implies exclusion of another thing); namely, absent legislative intent to the contrary, when a statute expressly provides a specific remedy for a specific situation, the statute is deemed to exclude other remedies for such situation. See National R.R. Passenger Corp. v. National Ass'n Of R.R. Passengers, 414 U.S. 453, 458 (1974); see also Botany Worsted Mills v. United States, 278 U.S.

282, 289 (1929)("when a statute limits a thing to be done in a particular mode, it includes the negative of any other mode"). Since Congress has provided in Public Laws 97-247 and 106-103 specific schemes for the revival of abandoned applications (*i.e.*, the specific situations under which the PTO may revive an abandoned application and the specific requirements (fee amounts and standards) applicable to each specific situation), the creation of other schemes (e.g., the herein requested waiver of the rules under 37 CFR 1.183) for the revival of any abandoned application would be inconsistent with the patent statute. Thus, the Commissioner's authority to revive an abandoned application is limited to that specified in the statutory scheme set forth in 35 U.S.C. §§ 41(a)(7), 111, 122, 133, and 151. See Morganroth v. Quigg, 885 F.2d 843, 847, 12 USPQ2d 1125, 1128 (Fed. Cir. 1989)(the Commissioner lacks the authority to revive an application abandoned by termination of court proceedings because 35 U.S.C. §§ 41(a)(7), 133, or 151 do not provide for the revival of an application abandoned in such a manner).

PETITION UNDER 37 CFR 1.137(b)

Alternatively, applicants request revival of the instant application pursuant to the provisions of 37 CFR 1.137(b) for failure to timely notify the U.S. Patent and Trademark (USPTO) of the filing of an application in a foreign country, or under a multinational treaty that requires publication of applications eighteen months after filing. *See* 37 CFR 1.137(f).

Decision on Petition under 37 CFR 1.137(b)

As noted above, applicants stated in the petition that the instant nonprovisional application is the subject of a counterpart international application filed on November 2, 2001. However, the US Patent and Trademark Office was unintentionally not notified of this filing within 45 days subsequent to the filing of the international application.

In view of the above, this application became abandoned pursuant to 35 U.S.C. 122(b)(2)(B)(iii) and 37 CFR 1.213(c) for failure to timely notify the Office of the filing of an application in a foreign country, or under a multilateral international agreement, that requires publication of applications 18 months after filing.

A petition under 37 CFR 1.137(f) must be accompanied by:

(1) the reply, which is met by the notification of such filing in a foreign country or under a multinational treaty;
(2) the petition fee as set forth in 37 CFR 1.17(m); and

(3) a statement that the entire delay in filing the required reply from the due date of the reply until the filing of a grantable petition was unintentional.

The instant petition has been found to be in compliance with 37 CFR 1.137(f). Accordingly, the failure to timely notify the Office of a foreign or international filing within 45 days after the date of filing of such foreign or international application as provided by 35 U.S.C. § 122(b)(2)(B)(iii) and 37 CFR 1.213(c) is accepted as having been unintentionally delayed.

The previous Request and Certification under 35 U.S.C. 122(b)(2)(B)(i) has been rescinded. A Notice Regarding Rescission of Nonpublication Request which sets forth the projected publication date of December 25, 2003 accompanies this decision on petition.

Telephone inquiries regarding this decision should be directed to Sherry Brinkley at (703) 305-9220.

This application is being forwarded to Technology Center 2100 for examination in due course.

Francas Hicks for
Brian Hearn
Senior Petitions Examiner
Office of Petitions
Office of the Deputy Commissioner
for Patent Examination Policy

ATTACHMENT: Notice Regarding Rescission of Nonpublication Request

UNITED STATES PATENT AND TRADEMARK OFFICE

Commissioner for Patents
United States Patent and Trademark Office
P.O. Box 1450
Alexandria, VA 22313-1450
www.uspto.gov

TEITELBAUM & MacLEAN
REGISTERED PATENT AGENTS LIMITED
280 SUNNYSIDE AVENUE
OTTOWA, ONTARIO
CANADA
K1S 0R8

COPY MAILED
JUL 2 0 2009
OFFICE OF PETITIONS

In re Application of	:	
Fish et al.	:	
Application No. 09/879821	:	
Filing or 371(c) Date: 06/11/2001	:	ON PETITION
Patent No. 6937638	:	
Issue Date: 08/30/2005	:	
Title of Invention:	:	
MANUFACTURABLE SAMPLED	:	
GRATING MIRRORS	:	

This is a notice regarding request for acceptance of a fee deficiency submission under 37 CFR 1.28. On September 1, 1998, the Court of Appeals for the Federal Circuit held that 37 CFR 1.28(c) is the sole provision governing the time for correction of the erroneous payment of the issue fee as a small entity. **See DH Technology v. Synergystex International, Inc. 154 F.3d 1333, 47 USPQ2d 1865 (Fed. Cir. Sept. 1, 1998).**

The Office no longer investigates or rejects original or reissue applications under 37 CFR 1.56. **1098 Off. Gaz. Pat. Office 502 (January 3, 1989)**. Therefore, nothing in this Notice is intended to imply that an investigation was done.

Your fee deficiency submission under 37 CFR 1.28 is hereby **ACCEPTED**.

This application is no longer entitled to small entity status. Accordingly, all future fees paid in this application must be paid at the large entity rate.

Petitioner is advised that, in patented files: requests for changes of correspondence address, powers of attorney, revocations of powers of attorney, withdrawal of attorney and submissions under 37 CFR 1.501: Designation of, or changes to, a fee address, should be addressed to Mail Stop M Correspondence.

Telephone inquiries concerning this matter should be directed to the undersigned at (571) 272-3232.

/Derek L. Woods/
Derek L. Woods
Attorney
Office of Petitions

UNITED STATES PATENT AND TRADEMARK OFFICE

Commissioner for Patents
United States Patent and Trademark Office
P.O. Box 1450
Alexandria, VA 22313-1450
www.uspto.gov

BRADFORD C. BLAISE
PILLSBURY WINTHROP SHAW PITTMAN, LLP
P.O.BOX 10500
MCLEAN VA 22102

COPY MAILED

JUN 29 2009

OFFICE OF PETITIONS

In re Application of :
Craig Barnett et al. :
Application No. 09/879,825 :
Filed: June 12, 2001 :
Attorney Docket No. 031792-0311564 :

ON PETITION

This is a decision on the petition under the unintentional provisions of 37 CFR 1.137(b), filed April 28, 2009, to revive the above-identified application.

The petition is **GRANTED**.

The application became abandoned for failure to timely file a reply within the meaning of 37 CFR 1.113 to the final Office action of October 24, 2008. The proposed reply required for consideration of a petition to revive must be a Notice of Appeal (and appeal fee required by 37 CFR 41.20(b)(2), an amendment that *prima facie* places the application in condition for allowance, a Request for Continued Examination and submission (37 CFR 1.114), or the filing of a continuing application under 37 CFR 1.53(b). See MPEP 711.03(c)(III)(A)(2). A three (3) month extensions of time pursuant to the provisions of 37 CFR 1.136(a) were obtained. Accordingly, the date of abandonment of this application is April 28, 2008.

The petition satisfies the requirements of 37 CFR 1.137(b) in that petitioner has supplied (1) the reply in the form of a Request for Continued Examination (RCE) and fee of $405, and the submission required by 37 CFR 1.114; (2) the petition fee of $810; and (3) a proper statement of unintentional delay.

Telephone inquiries concerning this decision should be directed to Newton Edwards at (571) 272-6052 or in his absence to the undersigned at (571) 272-7099.

This application is being referred to Technology Center AU 3622 for processing of the RCE and for appropriate action by the Examiner in the normal course of business on the amendment submitted in accordance with 37 CFR 1.114.

David Bucci
Petitions Examiner
Office of Petitions

UNITED STATES PATENT AND TRADEMARK OFFICE

Commissioner for Patents
United States Patent and Trademark Office
P. O. Box 1450
Alexandria, VA 22313-1450
www.uspto.gov

Paper No. 11

Klarquist Sparkman, LLP
121 SW Salmon Street
Suite 1600
Portland, OR 97204

COPY MAILED

JUL 1 8 2003

OFFICE OF PETITIONS

In re Application of
Mark W. P. Dane, et al.
Application No. 09/878,828
Filed: June 11, 2001
Attorney Docket No. 1011-64530

DECISION GRANTING PETITION
UNDER 37 CFR 1.137(b)

This is a decision on the petition, filed May 20, 2003, which is being treated as a petition under 37 CFR 1.137(b) to revive the instant nonprovisional application for failure to timely notify the U.S. Patent and Trademark (USPTO) of the filing of an application in a foreign country, or under a multinational treaty that requires publication of applications eighteen months after filing. *See* 37 CFR 1.137(f).

The petition is **GRANTED**.

Petitioner states that the instant nonprovisional application is the subject of an application filed in an eighteen-month publication country on September 6, 2001 and September 11, 2001. However, the USPTO was unintentionally not notified of this filing within 45 days subsequent to the filing of the subject application in an eighteen-month publication country.

In view of the above, this application became abandoned pursuant to 35 U.S.C. § 122(b)(2)(B)(iii) and 37 CFR 1.213(c) for failure to timely notify the Office of the filing of an application in a foreign country or under a multilateral international agreement that requires publication of applications 18 months after filing.

A petition to revive an application abandoned pursuant to 35 U.S.C. 122(b)(2)(B)(iii) for failure to notify the USPTO of a foreign filing must be accompanied by:

(1) the required reply which is met by the notification of such filing in a foreign country or under a multinational treaty;
(2) the petition fee as set forth in 37 CFR 1.17(m); and
(3) a statement that the entire delay in filing the required reply from the due date of the reply until the filing of a grantable petition was unintentional.

The instant petition has been found to be in compliance with 37 CFR 1.137(b). Accordingly, the failure to timely notify the USPTO of a foreign or international filing within 45 days after the date of filing of such foreign or international application as provided by 35 U.S.C. § 122(b)(2)(B)(iii) and 37 CFR 1.213(c) is accepted as having been unintentionally delayed.

Telephone inquiries concerning this decision should be directed to the undersigned at (703) 306-3475.

This application is being forwarded to Technology Center Art Unit 2161 for examination in due course.

Marianne E. Morgan

Marianne E. Morgan
Petitions Examiner
Office of Petitions
Office of the Deputy Commissioner
for Patent Examination Policy

UNITED STATES PATENT AND TRADEMARK OFFICE

Commissioner for Patents
United States Patent and Trademark Office
P.O. Box 1450
Alexandria, VA 22313-1450
www.uspto.gov

KLARQUIST SPARKMAN, LLP
121 SW SALMON STREET
SUITE 1600
PORTLAND, OR 97204

COPY MAILED

APR 26 2005

OFFICE OF PETITIONS

In re Application of
Mark P.W. Dane et al
Application No. 09/879,828
Filed: June 11, 2001
Attorney Docket No. 51005.P204

ON PETITION

This is a decision on the petition, filed April 25, 2005, under 37 CFR 1.313(c)(2) to withdraw the above-identified application from issue after payment of the issue fee.

The petition is **GRANTED**.

The above-identified application is withdrawn from issue for consideration of a submission under 37 CFR 1.114 (request for continued examination). See 37 CFR 1.313(c)(2).

Petitioner is advised that the issue fee paid on April 11, 2005 in the above-identified application cannot be refunded. If, however, the above-identified application is again allowed, petitioner may request that it be applied towards the issue fee required by the new Notice of Allowance.[1]

Telephone inquiries should be directed to Irvin Dingle at (571) 272-3210.

This matter will be forwarded to Technology Center AU 2812 for processing of the request for continued examination under 37 CFR 1.114 and for consideration of the concurrently filed Information Disclosure Statement.

Irvin Dingle
Petitions Examiner
Office of Petitions
Office of the Deputy Commissioner
for Patent Examination Policy

---

[1] The request to apply the issue fee to the new Notice may be satisfied by completing and returning the new Issue Fee Transmittal Form PTOL-85(b), which includes the following language thereon: Commissioner for Patents is requested to apply the Issue Fee and Publication Fee (if any) or re-apply any previously paid issue fee to the application identified above. Petitioner is advised that, whether a fee is indicated as being due or not, the Issue Fee Transmittal Form **must** be completed and timely submitted to avoid abandonment. Note the language in bold text on the first page of the Notice of Allowance and Fee(s) Due (PTOL-85).

UNITED STATES PATENT AND TRADEMARK OFFICE

Commissioner for Patents
United States Patent and Trademark Office
P. O. Box 1450
Alexandria, VA 22313-1450
www.uspto.gov

Paper No. 10

O'KEEFE EGAN & PETERMAN LLP
BUILDING C, SUITE 200
1101 CAPITAL OF TEXAS HIGHWAY SOUTH
AUSTIN, TX 78746

COPY MAILED

SEP 1 5 2003

OFFICE OF PETITIONS

In re Application of	:
Neal D. Hartsell et al	:DECISION ON PETITIONS
Application No. 09/879,834	:UNDER 37 CFR 1.181; 37
Filed: June 12, 2001	:CFR 1.183 AND 37 CFR
Attorney Docket No. SURG:149	:1.137(b)

This is a decision on the papers titled "Petition Concerning Notice of Foreign Filing a Foreign Application of a U.S. Patent Application For Which A Nonpublication Request Was Rescinded Under 35 USC 122(b)(2), " filed August 22, 2003. The petition is being treated as a petition under 37 CFR 1.181, 37 CFR 1.183, and 37 CFR 1.137(b).

The petition under 37 CFR 1.181 is **DISMISSED**.

The petition under 37 CFR 1.183 is **DISMISSED**.

The petition under 37 CFR 1.137(b) is **GRANTED**.

BACKGROUND

The above-identified application was filed on June 12, 2001. With the filing, applicants included a Request and Certification under 35 U.S.C. 122(b)(2)(B)(i) requesting that the application not be published. The nonpublication request reads:

> I hereby certify that the invention disclosed in the attached application **has not been and will not be** the subject of an application filed in another country, or under a multilateral agreement, that requires publication at eighteen months after filing. I hereby request that the attached application not be published under 35 U.S.C. 122(b). [Emphasis applicants.]

On November 2, 2001, applicants filed a counterpart international application relating to the subject matter of the above-identified application. Applicants provided the notice of the foreign filing as required by 35 U.S.C. § 122(b)(2)(B)(iii) and 37 CFR 1.213(c) when applicants filed this petition on August 22, 2003.

On January 4, 2002, applicants filed a Request to Rescind Nonpublication Request (35 U.S.C. § 122(b)(2)(B()(ii)), which bears a certificate of mailing date under 37 CFR 1.8 of October 18, 2001. This request stated that "I hereby rescind the previous request that the above-identified application not be published under 35 U.S.C. 122(b)." The rescission request does not make any mention of the fact that this application is, has been or will be the subject of an application filed in another country, or under a multilateral agreement, that requires publication at eighteen months after filing.

On August 22, 2003, applicants filed the instant petition and stated that the invention disclosed in the above-identified application was filed in a foreign country on November 2, 2001. From these dates, the notice of the foreign filing as required by 35 U.S.C. 122(b)(2)(B(iii) was not filed within 45 days after the date of filing of the international application.

STATUTE AND LEGISLATIVE HISTORY

35 U.S.C. (b)(2)(B) states, in pertinent part:

> (i) If an applicant makes a request upon filing, certifying that the invention disclosed in the application has not and will not be the subject of an application filed in another country, or under a multilateral international agreement, that requires publication of applications 18 months after filing, the application shall not be published as provided in paragraph (1).
>
> (ii) **An applicant may rescind a request made under clause (i) at any time.**
>
> (iii) An applicant who has made a request under clause (i) but who subsequently files, in a foreign country or under a multilateral international agreement specified in clause (i), an application directed to the invention disclosed in the application filed in the Patent and Trademark Office, shall

> notify the Director of such filing not later than 45 days after the date of the filing of such foreign or international application. **A failure of the applicant to provide such notice within the prescribed period shall result in the application being regarded as abandoned**, unless it is shown to the satisfaction of the Director that the delay in submitting the notice was unintentional.
>
> (iv) If an applicant rescinds a request made under clause (i) **or** notifies the Director that an application was filed in a foreign country or under a multilateral international agreement specified in clause (i), the application shall be published in accordance with the provisions of paragraph (1) on or as soon as is practical after the date that is specified in clause (i).[1]

The Congressional record explains that, if applicant has requested nonpublication because the application will not be filed "in a foreign country with a publication requirement, subparagraph (B)(iii) imposes a duty on the applicant to notify the Director of this fact. An unexcused failure to notify the Director will result in abandonment of the application." See 145 Cong. Rec. S14,718 (November 17, 1999).

PETITIONS UNDER 37 CFR 1.181 AND 1.183

Requested Relief under 37 CFR 1.181

As to the petition under **37 CFR 1.181**, applicants have requested that the foreign application filed by transmittal of PCT Application Serial No. PCT/US01/45547 by Express Mail on November 2, 2001, which included information identifying the above-captioned application by title, inventors, filing date and application number, be regarded as satisfying the notification of foreign filing requirements of 35 U.S.C. § 122(b)(2)(B)(iii).

Decision on Petition under 37 CFR 1.181

The argument that the filing of the PCT application satisfied the notification requirement of 35 U.S.C. § 122(b)(2)(B)(iii) of foreign filing is not persuasive. 37 CFR 1.213(c) requires the applicant to provide notice, and 37 CFR 1.4(b)

---

[1] Emphasis added.

provides that each application must be complete in itself. An international application would not be placed into the file of an application that it relies upon for the benefit of an earlier filing date, and so applicant was required to file a separate paper pursuant to 37 CFR 1.4(b) in the above-identified application. Therefore, the mere filing of a PCT application is not the notification required by 35 U.S.C. § 122(b)(2)(B)(iii) and 37 CFR 1.213(c). Petitioner's attention is also directed to 37 CFR 1.4(c), which states:

> Since different matters may be considered by different branches or sections of the United States Patent and Trademark Office, each distinct subject, inquiry or order must be contained in a separate paper to avoid confusion and delay in answering papers dealing with different subjects.

Pursuant to 37 CFR 1.4(c), the separate paper was required to address a distinct subject. Therefore, since a notification of foreign filing was required to be on a separate paper, the filing of the PCT application did not serve as the notification of foreign filing required by 35 U.S.C. § 122(b)(2)(B)(iii). It should be noted that the USPTO acts in a distinctly separate capacity, and in a dedicated, separate part of the Office, when it acts as a Receiving Office for the filing of applications and papers under the PCT. Accordingly, as a review of the contents of the file of the above-identified application shows that no notification of the November 2, 2001 filing of the PCT application was filed within 45 days after the filing date of the PCT application, applicants' failure to provide such timely notice of the filing of the PCT application, pursuant to 35 U.S.C. § 122(b)(2)(B)(iii) and 37 CFR 1.213(c), caused the above-identified application to become abandoned by operation of law at midnight December 17, 2001.

Requested Relief under 37 CFR 1.183

Alternatively, applicants request suspension of the rules under **37 CFR 1.183** if the Office finds that the filing of the PCT application does not satisfy the notification of foreign filing requirements of 35 U.S.C. § 122(b)(2)(B)(iii). In this regard, applicants contend that, despite the fact that the request to rescind the nonpublication request was mailed via certificate of mailing 15 days (i.e., on October 18, 2001) prior to the filing of the PCT application on November 2, 2001, the request to rescind was not processed and stamped by the USPTO until January 4, 2002, 78 days after the mailing of the request. With regard to the period during which the mails were delayed due to the anthrax discovery, applicants make reference to a notice published in the Official Gazette with

regard to the postal service delays caused by increased security procedures related to the discovery of anthrax in a Washington, D.C. mail facility and requests like relief with regard to the request to rescind the nonpublication request received on January 4, 2002 in the USPTO.

Decision on Petition under 37 CFR 1.183

As noted above, the request to rescind the nonpublication request was mailed via certificate of mailing under 37 CFR 1.8 on October 18, 2001, which was not received and stamped into the USPTO until January 4, 2002, due to mail delays. However, the relief provided for by the notice published in the Official Gazette of October 9, 2001, applies only to correspondence deposited by Express Mail under 37 CFR 1.10 and does not apply to mail deposited by first class mail under 37 CFR 1.8. In this regard, applicants' attention is directed to 1251 Official Gazette 55, which states:

> Parties submitting correspondence to the USPTO are reminded that 37 CFR 1.8 (certificate of mailing or transmission practice) does not provide for according a filing date as of the date of deposit with the USPS to correspondence submitted under 37 CFR 1.8. Therefore, it would be inappropriate to file a petition under 37 CFR 1.183 or 2.146(a)(5) and 2.148 to waive the requirements of 37 CFR 1.8.

In view of the above, applicants cannot rely on the notice published in the Official Gazette as a means for the requested relief under 37 CFR 1.183.

Moreover, the Notice published in the Official Gazette of July 1, 2003 (1272 Official Gazette 1), regarding the USPTO's clarification and interpretation of the provisions of 35 U.S.C. 122(b)(2)(B)(ii)-(iv), stated, in pertinent part under "In Summary:"

> (3) If an applicant makes a nonpublication request and subsequently files a counterpart application in an eighteen-month publication country before the nonpublication request is rescinded, 35 U.S.C. 122(b)(2)(B)(iii) requires the applicant to notify the USPTO of the foreign filing not later than forty-five days after the date such counterpart application was filed to avoid abandonment of the application.
> (4) When an application is abandoned by operation of 35 U.S.C.

> 122(b)(2)(B)(iii) due to the failure to timely notify the USPTO of the filing of a counterpart application in an eighteen-month publication country, applicant's sole remedy to restore the application to pending status is by filing a petition under 37 CFR 1.137(b) to revive the abandoned application.
> (5) Applicants should also provide a notice of foreign filing when rescinding a nonpublication request in anticipation of filing a counterpart application in an eighteen-month publication country because no benefit is given to a certificate of mailing or transmission under 37 CFR 1.8 on a rescission of a nonpublication request in determining whether applicant has rescinded the nonpublication request before or on the date a counterpart application is filed in an eighteen-month publication country.

Here, applicants' request to rescind the nonpublication request was mailed via certificate of mailing practice under 37 CFR 1.8, to which no benefit can be given. Further, since the request to rescind was not received in the USPTO until January 4, 2002, and the request did not provide any notice of foreign filing, compliance with 35 U.S.C. § 122(b)(2)(B)(iii) has not been satisfied. The Office has no authority pursuant to 37 CFR 1.183 to treat a rescission under 35 U.S.C. § 122(b)(2)(ii) as the notice of foreign filing required by 35 U.S.C. § 122(b)(2)(B)(iii). In addition, the Office has no authority to waive the 45 day period set forth in 35 U.S.C. § 122(b)(2)(B)(iii). As a result thereof, the application must be regarded as abandoned by operation of law. These are statutory requirements and a statutory requirement cannot be waived under the provisions of 37 CFR 1.183.

Moreover, as noted in item (4), applicants herein have a suitable remedy on hand that does not require the extraordinary remedy of invoking 37 CFR 1.183. It is brought to petitioner's attention that the USPTO will not normally consider an extraordinary remedy when the rules already provide an avenue for obtaining the relief sought. See Cantello v. Rasmussen, 220 USPQ 664 (Comm'r Pat. 1982). Furthermore, a standard principle of statutory construction is: *expressio unius est exclusion alterius* (the mention of one thing implies exclusion of another thing); namely, absent legislative intent to the contrary, when a statute expressly provides a specific remedy for a specific situation, the statute is deemed to exclude other remedies for such situation. See National R.R. Passenger Corp. v. National Ass'n Of R.R. Passengers, 414 U.S. 453, 458 (1974); see also Botany Worsted Mills v. United States, 278 U.S.

282, 289 (1929)("when a statute limits a thing to be done in a particular mode, it includes the negative of any other mode"). Since Congress has provided in Public Laws 97-247 and 106-103 specific schemes for the revival of abandoned applications (*i.e.*, the specific situations under which the PTO may revive an abandoned application and the specific requirements (fee amounts and standards) applicable to each specific situation), the creation of other schemes (e.g., the herein requested waiver of the rules under 37 CFR 1.183) for the revival of any abandoned application would be inconsistent with the patent statute. Thus, the Commissioner's authority to revive an abandoned application is limited to that specified in the statutory scheme set forth in 35 U.S.C. §§ 41(a)(7), 111, 122, 133, and 151. See Morganroth v. Quigg, 885 F.2d 843, 847, 12 USPQ2d 1125, 1128 (Fed. Cir. 1989)(the Commissioner lacks the authority to revive an application abandoned by termination of court proceedings because 35 U.S.C. §§ 41(a)(7), 133, or 151 do not provide for the revival of an application abandoned in such a manner).

PETITION UNDER 37 CFR 1.137(b)

Alternatively, applicants request revival of the instant application pursuant to the provisions of 37 CFR 1.137(b) for failure to timely notify the U.S. Patent and Trademark (USPTO) of the filing of an application in a foreign country, or under a multinational treaty that requires publication of applications eighteen months after filing. *See* 37 CFR 1.137(f).

Decision on Petition under 37 CFR 1.137(b)

As noted above, applicants stated in the petition that the instant nonprovisional application is the subject of a counterpart international application filed on November 2, 2001. However, the US Patent and Trademark Office was unintentionally not notified of this filing within 45 days subsequent to the filing of the international application.

In view of the above, this application became abandoned pursuant to 35 U.S.C. 122(b)(2)(B)(iii) and 37 CFR 1.213(c) for failure to timely notify the Office of the filing of an application in a foreign country, or under a multilateral international agreement, that requires publication of applications 18 months after filing.

A petition under 37 CFR 1.137(f) must be accompanied by:

(1) the reply, which is met by the notification of such filing in a foreign country or under a multinational treaty;
(2) the petition fee as set forth in 37 CFR 1.17(m); and

(3) a statement that the entire delay in filing the required reply from the due date of the reply until the filing of a grantable petition was unintentional.

The instant petition has been found to be in compliance with 37 CFR 1.137(f). Accordingly, the failure to timely notify the Office of a foreign or international filing within 45 days after the date of filing of such foreign or international application as provided by 35 U.S.C. § 122(b)(2)(B)(iii) and 37 CFR 1.213(c) is accepted as having been unintentionally delayed.

Telephone inquiries regarding this decision should be directed to Frances Hicks at (703) 305-8680.

This application is being forwarded to Technology Center 2100 for examination in due course.

Frances Hicks for
Brian Hearn
Senior Petitions Examiner
Office of Petitions
Office of the Deputy Commissioner
for Patent Examination Policy

UNITED STATES PATENT AND TRADEMARK OFFICE

Commissioner for Patents
United States Patent and Trademark Office
P. O. Box 1450
Alexandria, VA 22313-1450
www.uspto.gov

Paper No. 10

O'KEEFE EGAN & PETERMAN LLP
BUILDING C, SUITE 200
1101 CAPITAL OF TEXAS HIGHWAY SOUTH
AUSTIN, TX 78746

COPY MAILED

SEP 1 5 2003

OFFICE OF PETITIONS

In re Application of	:
Neal D. Hartsell et al	:DECISION ON PETITIONS
Application No. 09/879,836	:UNDER 37 CFR 1.181; 37
Filed: June 12, 2001	:CFR 1.183 AND 37 CFR
Attorney Docket No. SURG:153	:1.137(b)

This is a decision on the papers titled "Petition Concerning Notice of Foreign Filing a Foreign Application of a U.S. Patent Application For Which A Nonpublication Request Was Rescinded Under 35 USC 122(b)(2), " filed August 22, 2003. The petition is being treated as a petition under 37 CFR 1.181, 37 CFR 1.183, and 37 CFR 1.137(b).

The petition under 37 CFR 1.181 is **DISMISSED.**

The petition under 37 CFR 1.183 is **DISMISSED.**

The petition under 37 CFR 1.137(b) is **GRANTED**.

BACKGROUND

The above-identified application was filed on June 12, 2001. With the filing, applicants included a Request and Certification under 35 U.S.C. 122(b)(2)(B)(i) requesting that the application not be published. The nonpublication request reads:

> I hereby certify that the invention disclosed in the attached application **has not been and will not be** the subject of an application filed in another country, or under a multilateral agreement, that requires publication at eighteen months after filing. I hereby request that the attached application not be published under 35 U.S.C. 122(b). [Emphasis applicants.]

On November 2, 2001, applicants filed a counterpart international application relating to the subject matter of the above-identified application. Applicants provided the notice of the foreign filing as required by 35 U.S.C. § 122(b)(2)(B)(iii) and 37 CFR 1.213(c) when applicants filed this petition on August 22, 2003.

On February 7, 2002, applicants filed a Request to Rescind Nonpublication Request (35 U.S.C. § 122(b)(2)(B()(ii)), which bears a certificate of mailing date under 37 CFR 1.8 of October 18, 2001. This request stated that "I hereby rescind the previous request that the above-identified application not be published under 35 U.S.C. 122(b)." The rescission request does not make any mention of the fact that this application is, has been or will be the subject of an application filed in another country, or under a multilateral agreement, that requires publication at eighteen months after filing.

On August 22, 2003, applicants filed the instant petition and stated that the invention disclosed in the above-identified application was filed in a foreign country on November 2, 2001. From these dates, the notice of the foreign filing as required by 35 U.S.C. 122(b)(2)(B(iii) was not filed within 45 days after the date of filing of the international application.

STATUTE AND LEGISLATIVE HISTORY

35 U.S.C. (b)(2)(B) states, in pertinent part:

> (i) If an applicant makes a request upon filing, certifying that the invention disclosed in the application has not and will not be the subject of an application filed in another country, or under a multilateral international agreement, that requires publication of applications 18 months after filing, the application shall not be published as provided in paragraph (1).
>
> (ii) **An applicant may rescind a request made under clause (i) at any time**.
>
> (iii) An applicant who has made a request under clause (i) but who subsequently files, in a foreign country or under a multilateral international agreement specified in clause (i), an application directed to the invention disclosed in the application filed in the Patent and Trademark Office, shall

> notify the Director of such filing not later than 45 days after the date of the filing of such foreign or international application. **A failure of the applicant to provide such notice within the prescribed period shall result in the application being regarded as abandoned**, unless it is shown to the satisfaction of the Director that the delay in submitting the notice was unintentional.
>
> (iv) If an applicant rescinds a request made under clause (i) **or** notifies the Director that an application was filed in a foreign country or under a multilateral international agreement specified in clause (i), the application shall be published in accordance with the provisions of paragraph (1) on or as soon as is practical after the date that is specified in clause (i).[1]

The Congressional record explains that, if applicant has requested nonpublication because the application will not be filed "in a foreign country with a publication requirement, subparagraph (B)(iii) imposes a duty on the applicant to notify the Director of this fact. An unexcused failure to notify the Director will result in abandonment of the application." See 145 Cong. Rec. S14,718 (November 17, 1999).

PETITIONS UNDER 37 CFR 1.181 AND 1.183

Requested Relief under 37 CFR 1.181

As to the petition under **37 CFR 1.181**, applicants have requested that the foreign application filed by transmittal of PCT Application Serial No. PCT/US01/45721 by Express Mail on November 2, 2001, which included information identifying the above-captioned application by title, inventors, filing date and application number, be regarded as satisfying the notification of foreign filing requirements of 35 U.S.C. § 122(b)(2)(B)(iii).

Decision on Petition under 37 CFR 1.181

The argument that the filing of the PCT application satisfied the notification requirement of 35 U.S.C. § 122(b)(2)(B)(iii) of foreign filing is not persuasive. 37 CFR 1.213(c) requires the applicant to provide notice, and 37 CFR 1.4(b)

---

[1] Emphasis added.

provides that each application must be complete in itself. An international application would not be placed into the file of an application that it relies upon for the benefit of an earlier filing date, and so applicant was required to file a separate paper pursuant to 37 CFR 1.4(b) in the above-identified application. Therefore, the mere filing of a PCT application is not the notification required by 35 U.S.C. § 122(b)(2)(B)(iii) and 37 CFR 1.213(c). Petitioner's attention is also directed to 37 CFR 1.4(c), which states:

> Since different matters may be considered by different branches or sections of the United States Patent and Trademark Office, each distinct subject, inquiry or order must be contained in a separate paper to avoid confusion and delay in answering papers dealing with different subjects.

Pursuant to 37 CFR 1.4(c), the separate paper was required to address a distinct subject. Therefore, since a notification of foreign filing was required to be on a separate paper, the filing of the PCT application did not serve as the notification of foreign filing required by 35 U.S.C. § 122(b)(2)(B)(iii). It should be noted that the USPTO acts in a distinctly separate capacity, and in a dedicated, separate part of the Office, when it acts as a Receiving Office for the filing of applications and papers under the PCT. Accordingly, as a review of the contents of the file of the above-identified application shows that no notification of the November 2, 2001 filing of the PCT application was filed within 45 days after the filing date of the PCT application, applicants' failure to provide such timely notice of the filing of the PCT application, pursuant to 35 U.S.C. § 122(b)(2)(B)(iii) and 37 CFR 1.213(c), caused the above-identified application to become abandoned by operation of law at midnight December 17, 2001.

Requested Relief under 37 CFR 1.183

Alternatively, applicants request suspension of the rules under **37 CFR 1.183** if the Office finds that the filing of the PCT application does not satisfy the notification of foreign filing requirements of 35 U.S.C. § 122(b)(2)(B)(iii). In this regard, applicants contend that, despite the fact that the request to rescind the nonpublication request was mailed via certificate of mailing 15 days (i.e., on October 18, 2001) prior to the filing of the PCT application on November 2, 2001, the request to rescind was not processed and stamped by the USPTO until February 7, 2002, 112 days after the mailing of the request. With regard to the period during which the mails were delayed due to the anthrax discovery, applicants make reference to a notice published in the Official

Gazette with regard to the postal service delays caused by increased security procedures related to the discovery of anthrax in a Washington, D.C. mail facility and requests like relief with regard to the request to rescind the nonpublication request received on February 7, 2002 in the USPTO.

Decision on Petition under 37 CFR 1.183

As noted above, the request to rescind the nonpublication request was mailed via certificate of mailing under 37 CFR 1.8 on October 18, 2001, which was not received and stamped into the USPTO until February 7, 2002, due to mail delays. However, the relief provided for by the notice published in the Official Gazette of October 9, 2001, applies only to correspondence deposited by Express Mail under 37 CFR 1.10 and does not apply to mail deposited by first class mail under 37 CFR 1.8. In this regard, applicants' attention is directed to 1251 Official Gazette 55, which states:

> Parties submitting correspondence to the USPTO are reminded that 37 CFR 1.8 (certificate of mailing or transmission practice) does not provide for according a filing date as of the date of deposit with the USPS to correspondence submitted under 37 CFR 1.8. Therefore, it would be inappropriate to file a petition under 37 CFR 1.183 or 2.146(a)(5) and 2.148 to waive the requirements of 37 CFR 1.8.

In view of the above, applicants cannot rely on the notice published in the Official Gazette as a means for the requested relief under 37 CFR 1.183.

Moreover, the Notice published in the Official Gazette of July 1, 2003 (1272 Official Gazette 1), regarding the USPTO's clarification and interpretation of the provisions of 35 U.S.C. 122(b)(2)(B)(ii)-(iv), stated, in pertinent part under "In Summary:"

> (3) If an applicant makes a nonpublication request and subsequently files a counterpart application in an eighteen-month publication country before the nonpublication request is rescinded, 35 U.S.C. 122(b)(2)(B)(iii) requires the applicant to notify the USPTO of the foreign filing not later than forty-five days after the date such counterpart application was filed to avoid abandonment of the application.
> (4) When an application is abandoned by operation of 35 U.S.C.

> 122(b)(2)(B)(iii) due to the failure to timely notify the USPTO of the filing of a counterpart application in an eighteen-month publication country, applicant's sole remedy to restore the application to pending status is by filing a petition under 37 CFR 1.137(b) to revive the abandoned application.
> (5) Applicants should also provide a notice of foreign filing when rescinding a nonpublication request in anticipation of filing a counterpart application in an eighteen-month publication country because no benefit is given to a certificate of mailing or transmission under 37 CFR 1.8 on a rescission of a nonpublication request in determining whether applicant has rescinded the nonpublication request before or on the date a counterpart application is filed in an eighteen-month publication country.

Here, applicants' request to rescind the nonpublication request was mailed via certificate of mailing practice under 37 CFR 1.8, to which no benefit can be given. Further, since the request to rescind was not received in the USPTO until February 7, 2002, and the request did not provide any notice of foreign filing, compliance with 35 U.S.C. § 122(b)(2)(B)(iii) has not been satisfied. The Office has no authority pursuant to 37 CFR 1.183 to treat a rescission under 35 U.S.C. § 122(b)(2)(ii) as the notice of foreign filing required by 35 U.S.C. § 122(b)(2)(B)(iii). In addition, the Office has no authority to waive the 45 day period set forth in 35 U.S.C. § 122(b)(2)(B)(iii). As a result thereof, the application must be regarded as abandoned by operation of law. These are statutory requirements and a statutory requirement cannot be waived under the provisions of 37 CFR 1.183.

Moreover, as noted in item (4), applicants herein have a suitable remedy on hand that does not require the extraordinary remedy of invoking 37 CFR 1.183. It is brought to petitioner's attention that the USPTO will not normally consider an extraordinary remedy when the rules already provide an avenue for obtaining the relief sought. See Cantello v. Rasmussen, 220 USPQ 664 (Comm'r Pat. 1982). Furthermore, a standard principle of statutory construction is: *expressio unius est exclusion alterius* (the mention of one thing implies exclusion of another thing); namely, absent legislative intent to the contrary, when a statute expressly provides a specific remedy for a specific situation, the statute is deemed to exclude other remedies for such situation. See National R.R. Passenger Corp. v. National Ass'n Of R.R. Passengers, 414 U.S. 453, 458 (1974); see also Botany Worsted Mills v. United States, 278 U.S.

282, 289 (1929)("when a statute limits a thing to be done in a particular mode, it includes the negative of any other mode"). Since Congress has provided in Public Laws 97-247 and 106-103 specific schemes for the revival of abandoned applications (*i.e.*, the specific situations under which the PTO may revive an abandoned application and the specific requirements (fee amounts and standards) applicable to each specific situation), the creation of other schemes (e.g., the herein requested waiver of the rules under 37 CFR 1.183) for the revival of any abandoned application would be inconsistent with the patent statute. Thus, the Commissioner's authority to revive an abandoned application is limited to that specified in the statutory scheme set forth in 35 U.S.C. §§ 41(a)(7), 111, 122, 133, and 151. See Morganroth v. Quigg, 885 F.2d 843, 847, 12 USPQ2d 1125, 1128 (Fed. Cir. 1989)(the Commissioner lacks the authority to revive an application abandoned by termination of court proceedings because 35 U.S.C. §§ 41(a)(7), 133, or 151 do not provide for the revival of an application abandoned in such a manner).

PETITION UNDER 37 CFR 1.137(b)

Alternatively, applicants request revival of the instant application pursuant to the provisions of 37 CFR 1.137(b) for failure to timely notify the U.S. Patent and Trademark (USPTO) of the filing of an application in a foreign country, or under a multinational treaty that requires publication of applications eighteen months after filing. *See* 37 CFR 1.137(f).

Decision on Petition under 37 CFR 1.137(b)

As noted above, applicants stated in the petition that the instant nonprovisional application is the subject of a counterpart international application filed on November 2, 2001. However, the US Patent and Trademark Office was unintentionally not notified of this filing within 45 days subsequent to the filing of the international application.

In view of the above, this application became abandoned pursuant to 35 U.S.C. 122(b)(2)(B)(iii) and 37 CFR 1.213(c) for failure to timely notify the Office of the filing of an application in a foreign country, or under a multilateral international agreement, that requires publication of applications 18 months after filing.

A petition under 37 CFR 1.137(f) must be accompanied by:

(1) the reply, which is met by the notification of such filing in a foreign country or under a multinational treaty;
(2) the petition fee as set forth in 37 CFR 1.17(m); and

(3) a statement that the entire delay in filing the required reply from the due date of the reply until the filing of a grantable petition was unintentional.

The instant petition has been found to be in compliance with 37 CFR 1.137(f). Accordingly, the failure to timely notify the Office of a foreign or international filing within 45 days after the date of filing of such foreign or international application as provided by 35 U.S.C. § 122(b)(2)(B)(iii) and 37 CFR 1.213(c) is accepted as having been unintentionally delayed.

Telephone inquiries regarding this decision should be directed to Frances Hicks at (703) 305-8680.

This application is being forwarded to Technology Center 2100 for examination in due course.

Frances Hicks for
Brian Hearn
Senior Petitions Examiner
Office of Petitions
Office of the Deputy Commissioner
for Patent Examination Policy

UNITED STATES PATENT AND TRADEMARK OFFICE

Commissioner for Patents
United States Patent and Trademark Office
P. O. Box 1450
Alexandria, VA 22313-1450
www.uspto.gov

Paper No. 8

O'KEEFE EGAN & PETERMAN LLP
BUILDING C, SUITE 200
1101 CAPITAL OF TEXAS HIGHWAY SOUTH
AUSTIN, TX 78746

COPY MAILED

SEP 1 5 2003

OFFICE OF PETITIONS

In re Application of	:
Neal Hartsell, et al.	:DECISION ON PETITIONS
Application No. 09/879,848	:UNDER 37 CFR 1.181; 37
Filed: June 12, 2001	:CFR 1.183 AND 37 CFR
Attorney Docket No. SURG:154	:1.137(b)

This is a decision on the papers titled "Petition Concerning Notice of Foreign Filing a Foreign Application of a U.S. Patent Application For Which A Nonpublication Request Was Rescinded Under 35 USC 122(b)(2), " filed August 22, 2003. The petition is being treated as a petition under 37 CFR 1.181, 37 CFR 1.183, and 37 CFR 1.137(b).

The petition under 37 CFR 1.181 is **DISMISSED.**

The petition under 37 CFR 1.183 is **DISMISSED.**

The petition under 37 CFR 1.137(b) is **GRANTED**.

BACKGROUND

The above-identified application was filed on June 12, 2001. With the filing, applicants included a Request and Certification under 35 U.S.C. 122(b)(2)(B)(i) requesting that the application not be published. The nonpublication request reads:

> I hereby certify that the invention disclosed in the attached application **has not been and will not be** the subject of an application filed in another country, or under a multilateral agreement, that requires publication at eighteen months after filing. I hereby request that the attached application not be published under 35 U.S.C. 122(b). [Emphasis applicants.]

On November 2, 2001, applicants filed a counterpart international application relating to the subject matter of the above-identified application. Applicants provided the notice of the foreign filing as required by 35 U.S.C. § 122(b)(2)(B)(iii) and 37 CFR 1.213(c) when applicants filed this petition on August 22, 2003.

On January 4, 2002, applicants filed a Request to Rescind Nonpublication Request (35 U.S.C. § 122(b)(2)(B()(ii)), which bears a certificate of mailing date under 37 CFR 1.8 of October 18, 2001. This request stated that "I hereby rescind the previous request that the above-identified application not be published under 35 U.S.C. 122(b)." The rescission request does not make any mention of the fact that this application is, has been or will be the subject of an application filed in another country, or under a multilateral agreement, that requires publication at eighteen months after filing.

On August 22, 2003, applicants filed the instant petition and stated that the invention disclosed in the above-identified application was filed in a foreign country on November 2, 2001. From these dates, the notice of the foreign filing as required by 35 U.S.C. 122(b)(2)(B(iii) was not filed within 45 days after the date of filing of the international application.

STATUTE AND LEGISLATIVE HISTORY

35 U.S.C. (b)(2)(B) states, in pertinent part:

> (i) If an applicant makes a request upon filing, certifying that the invention disclosed in the application has not and will not be the subject of an application filed in another country, or under a multilateral international agreement, that requires publication of applications 18 months after filing, the application shall not be published as provided in paragraph (1).
>
> (ii) **An applicant may rescind a request made under clause (i) at any time**.
>
> (iii) An applicant who has made a request under clause (i) but who subsequently files, in a foreign country or under a multilateral international agreement specified in clause (i), an application directed to the invention disclosed in the application filed in the Patent and Trademark Office, shall

> notify the Director of such filing not later than 45 days after the date of the filing of such foreign or international application. **A failure of the applicant to provide such notice within the prescribed period shall result in the application being regarded as abandoned**, unless it is shown to the satisfaction of the Director that the delay in submitting the notice was unintentional.
>
> (iv) If an applicant rescinds a request made under clause (i) **or** notifies the Director that an application was filed in a foreign country or under a multilateral international agreement specified in clause (i), the application shall be published in accordance with the provisions of paragraph (1) on or as soon as is practical after the date that is specified in clause (i).[1]

The Congressional record explains that, if applicant has requested nonpublication because the application will not be filed "in a foreign country with a publication requirement, subparagraph (B)(iii) imposes a duty on the applicant to notify the Director of this fact. An unexcused failure to notify the Director will result in abandonment of the application." See 145 Cong. Rec. S14,718 (November 17, 1999).

PETITIONS UNDER 37 CFR 1.181 AND 1.183

Requested Relief under 37 CFR 1.181

As to the petition under **37 CFR 1.181**, applicants have requested that the foreign application filed by transmittal of PCT Application Serial No. PCT/US01/45493 by Express Mail on November 2, 2001, which included information identifying the above-captioned application by title, inventors, filing date and application number, be regarded as satisfying the notification of foreign filing requirements of 35 U.S.C. § 122(b)(2)(B)(iii).

Decision on Petition under 37 CFR 1.181

The argument that the filing of the PCT application satisfied the notification requirement of 35 U.S.C. § 122(b)(2)(B)(iii) of foreign filing is not persuasive. 37 CFR 1.213(c) requires the applicant to provide notice, and 37 CFR 1.4(b)

---

[1] Emphasis added.

provides that each application must be complete in itself. An international application would not be placed into the file of an application that it relies upon for the benefit of an earlier filing date, and so applicant was required to file a separate paper pursuant to 37 CFR 1.4(b) in the above-identified application. Therefore, the mere filing of a PCT application is not the notification required by 35 U.S.C. § 122(b)(2)(B)(iii) and 37 CFR 1.213(c). Petitioner's attention is also directed to 37 CFR 1.4(c), which states:

> Since different matters may be considered by different branches or sections of the United States Patent and Trademark Office, each distinct subject, inquiry or order must be contained in a separate paper to avoid confusion and delay in answering papers dealing with different subjects.

Pursuant to 37 CFR 1.4(c), the separate paper was required to address a distinct subject. Therefore, since a notification of foreign filing was required to be on a separate paper, the filing of the PCT application did not serve as the notification of foreign filing required by 35 U.S.C. § 122(b)(2)(B)(iii). It should be noted that the USPTO acts in a distinctly separate capacity, and in a dedicated, separate part of the Office, when it acts as a Receiving Office for the filing of applications and papers under the PCT. Accordingly, as a review of the contents of the file of the above-identified application shows that no notification of the November 2, 2001 filing of the PCT application was filed within 45 days after the filing date of the PCT application, applicants' failure to provide such timely notice of the filing of the PCT application, pursuant to 35 U.S.C. § 122(b)(2)(B)(iii) and 37 CFR 1.213(c), caused the above-identified application to become abandoned by operation of law at midnight December 17, 2001.

Requested Relief under 37 CFR 1.183

Alternatively, applicants request suspension of the rules under **37 CFR 1.183** if the Office finds that the filing of the PCT application does not satisfy the notification of foreign filing requirements of 35 U.S.C. § 122(b)(2)(B)(iii). In this regard, applicants contend that, despite the fact that the request to rescind the nonpublication request was mailed via certificate of mailing 15 days (i.e., on October 18, 2001 prior to the filing of the PCT application on November 2, 2001, the request to rescind was not processed and stamped by the USPTO until January 4, 2002, 78 days after the mailing of the request. With regard to the period during which the mails were delayed due to the anthrax discovery, applicants make reference to a notice published in the Official Gazette with

regard to the postal service delays caused by increased security procedures related to the discovery of anthrax in a Washington, D.C. mail facility and requests like relief with regard to the request to rescind the nonpublication request received on January 4, 2002 in the USPTO.

Decision on Petition under 37 CFR 1.183

As noted above, the request to rescind the nonpublication request was mailed via certificate of mailing under 37 CFR 1.8 on October 18, 2001, which was not received and stamped into the USPTO until January 4, 2002, due to mail delays. However, the relief provided for by the notice published in the Official Gazette of October 9, 2001, applies only to correspondence deposited by Express Mail under 37 CFR 1.10 and does not apply to mail deposited by first class mail under 37 CFR 1.8. In this regard, applicants' attention is directed to 1251 Official Gazette 55, which states:

> Parties submitting correspondence to the USPTO are reminded that 37 CFR 1.8 (certificate of mailing or transmission practice) does not provide for according a filing date as of the date of deposit with the USPS to correspondence submitted under 37 CFR 1.8. Therefore, it would be inappropriate to file a petition under 37 CFR 1.183 or 2.146(a)(5) and 2.148 to waive the requirements of 37 CFR 1.8.

In view of the above, applicants cannot rely on the notice published in the Official Gazette as a means for the requested relief under 37 CFR 1.183.

Moreover, the Notice published in the Official Gazette of July 1, 2003 (1272 Official Gazette 1), regarding the USPTO's clarification and interpretation of the provisions of 35 U.S.C. 122(b)(2)(B)(ii)-(iv), stated, in pertinent part under "In Summary:"

> (3) If an applicant makes a nonpublication request and subsequently files a counterpart application in an eighteen-month publication country before the nonpublication request is rescinded, 35 U.S.C. 122(b)(2)(B)(iii) requires the applicant to notify the USPTO of the foreign filing not later than forty-five days after the date such counterpart application was filed to avoid abandonment of the application.
> (4) When an application is abandoned by operation of 35 U.S.C.

> 122(b)(2)(B)(iii) due to the failure to timely notify the USPTO of the filing of a counterpart application in an eighteen-month publication country, applicant's sole remedy to restore the application to pending status is by filing a petition under 37 CFR 1.137(b) to revive the abandoned application.
> (5) Applicants should also provide a notice of foreign filing when rescinding a nonpublication request in anticipation of filing a counterpart application in an eighteen-month publication country because no benefit is given to a certificate of mailing or transmission under 37 CFR 1.8 on a rescission of a nonpublication request in determining whether applicant has rescinded the nonpublication request before or on the date a counterpart application is filed in an eighteen-month publication country.

Here, applicants' request to rescind the nonpublication request was mailed via certificate of mailing practice under 37 CFR 1.8, to which no benefit can be given. Further, since the request to rescind was not received in the USPTO until January 4, 2002, and the request did not provide any notice of foreign filing, compliance with 35 U.S.C. § 122(b)(2)(B)(iii) has not been satisfied. The Office has no authority pursuant to 37 CFR 1.183 to treat a rescission under 35 U.S.C. § 122(b)(2)(ii) as the notice of foreign filing required by 35 U.S.C. § 122(b)(2)(B)(iii). In addition, the Office has no authority to waive the 45 day period set forth in 35 U.S.C. § 122(b)(2)(B)(iii). As a result thereof, the application must be regarded as abandoned by operation of law. These are statutory requirements and a statutory requirement cannot be waived under the provisions of 37 CFR 1.183.

Moreover, as noted in item (4), applicants herein have a suitable remedy on hand that does not require the extraordinary remedy of invoking 37 CFR 1.183. It is brought to petitioner's attention that the USPTO will not normally consider an extraordinary remedy when the rules already provide an avenue for obtaining the relief sought. See Cantello v. Rasmussen, 220 USPQ 664 (Comm'r Pat. 1982). Furthermore, a standard principle of statutory construction is: *expressio unius est exclusion alterius* (the mention of one thing implies exclusion of another thing); namely, absent legislative intent to the contrary, when a statute expressly provides a specific remedy for a specific situation, the statute is deemed to exclude other remedies for such situation. See National R.R. Passenger Corp. v. National Ass'n Of R.R. Passengers, 414 U.S. 453, 458 (1974); see also Botany Worsted Mills v. United States, 278 U.S.

282, 289 (1929)("when a statute limits a thing to be done in a particular mode, it includes the negative of any other mode"). Since Congress has provided in Public Laws 97-247 and 106-103 specific schemes for the revival of abandoned applications (*i.e.*, the specific situations under which the PTO may revive an abandoned application and the specific requirements (fee amounts and standards) applicable to each specific situation), the creation of other schemes (e.g., the herein requested waiver of the rules under 37 CFR 1.183) for the revival of any abandoned application would be inconsistent with the patent statute. Thus, the Commissioner's authority to revive an abandoned application is limited to that specified in the statutory scheme set forth in 35 U.S.C. §§ 41(a)(7), 111, 122, 133, and 151. See Morganroth v. Quigg, 885 F.2d 843, 847, 12 USPQ2d 1125, 1128 (Fed. Cir. 1989)(the Commissioner lacks the authority to revive an application abandoned by termination of court proceedings because 35 U.S.C. §§ 41(a)(7), 133, or 151 do not provide for the revival of an application abandoned in such a manner).

PETITION UNDER 37 CFR 1.137(b)

Alternatively, applicants request revival of the instant application pursuant to the provisions of 37 CFR 1.137(b) for failure to timely notify the U.S. Patent and Trademark (USPTO) of the filing of an application in a foreign country, or under a multinational treaty that requires publication of applications eighteen months after filing. *See* 37 CFR 1.137(f).

Decision on Petition under 37 CFR 1.137(b)

As noted above, applicants stated in the petition that the instant nonprovisional application is the subject of a counterpart international application filed on November 2, 2001. However, the US Patent and Trademark Office was unintentionally not notified of this filing within 45 days subsequent to the filing of the international application.

In view of the above, this application became abandoned pursuant to 35 U.S.C. 122(b)(2)(B)(iii) and 37 CFR 1.213(c) for failure to timely notify the Office of the filing of an application in a foreign country, or under a multilateral international agreement, that requires publication of applications 18 months after filing.

A petition under 37 CFR 1.137(f) must be accompanied by:

(1) the reply, which is met by the notification of such filing in a foreign country or under a multinational treaty;
(2) the petition fee as set forth in 37 CFR 1.17(m); and

(3) a statement that the entire delay in filing the required reply from the due date of the reply until the filing of a grantable petition was unintentional.

The instant petition has been found to be in compliance with 37 CFR 1.137(f). Accordingly, the failure to timely notify the Office of a foreign or international filing within 45 days after the date of filing of such foreign or international application as provided by 35 U.S.C. § 122(b)(2)(B)(iii) and 37 CFR 1.213(c) is accepted as having been unintentionally delayed.

Telephone inquiries regarding this decision should be directed to Sherry Brinkley at (703) 305-9220.

This application is being forwarded to Technology Center 2100 for examination in due course.

Frances Hicks for

Brian Hearn
Senior Petitions Examiner
Office of Petitions
Office of the Deputy Commissioner
for Patent Examination Policy

UNITED STATES PATENT AND TRADEMARK OFFICE

COMMISSIONER FOR PATENTS
UNITED STATES PATENT AND TRADEMARK OFFICE
P.O. BOX 1450
ALEXANDRIA, VA 22313-1450
www.uspto.gov

JAN 12 2004

#11

SHERRY M. KNOWLES, ESQ.
KING & SPALDING
191 PEACHTREE STREET
ATLANTA GA 30303

In re Application of	:
Raymond F. Shinazi et al	:
Serial No.: 09/879,854	: PETITION DECISION
Filed: June 12, 2001	:
Attorney Docket No.: 18085.105093	:

This is in response to the petition under 37 CFR 1.181, filed October 20, 2003, for withdrawal of abandonment of the above identified application based on filing of a timely reply.

A review of the file history shows that the examiner mailed an Office action to applicants on April 16, 2003, setting a one month shortened statutory period for reply. The examiner mailed a Notice of Abandonment to applicants on September 8, 2003, more than a month in advance of the expiration of the six month statutory period for reply. Applicants replied on October 20, 2003 (Certificate of Mailing dated October 16, 2003), including a request for a five month extension of time and fee therefor and this petition. In view of the timely reply the Notice of Abandonment was mailed prematurely and in error and is withdrawn and the application is restored to pending status with the mailing of this decision

The petition is **GRANTED**.

The application will be forwarded to the examiner for further action.

Should there be any questions about this decision please contact William R. Dixon, Jr., by letter addressed to Director, TC 1600, at the address listed above, or by telephone at 571-272-0519 or by facsimile sent to the general Office facsimile number.

Bruce M. Kisliuk
Director, Technology Center 1600

Under the Paperwork Reduction Act of 1995, no persons are required to respond to a collection of information unless it displays valid OMB control number.

PETITION TO ACCEPT UNINTENTIONALLY DELAYED PAYMENT OF MAINTENANCE FEE IN AN EXPIRED PATENT (37 CFR 1.378(c))

Patent Number	Issue Date (YYYY-MM-DD)	Application Number	Filing Date (YYYY-MM-DD)	Docket Number (if applicable)
6,543,059	2003-04-08	09/879,869	2001-06-08	NA-1166

CAUTION: Maintenance fee (and surcharge, if any) payment must correctly identify: (1) the patent number and (2) the application number of the actual U.S. application leading to issuance of that patent to ensure the fee(s) is/are associated with the correct patent. 37 CFR 1.366(c) and (d).

SMALL ENTITY
☐ Patentee claims, or has previously claimed, small entity status. See 37 CFR 1.27.

LOSS OF ENTITLEMENT TO SMALL ENTITY STATUS
☐ Patentee is no longer entitled to small entity status. See 37 CFR 1.27(g)

NOT Small Entity		Small Entity	
Fee	Code	Fee	Code
◉ 3 ½ year	(1551)	○ 3 ½ year	(2551)
○ 7 ½ year	(1552)	○ 7 ½ year	(2552)
○ 11 ½ year	(1553)	○ 11 ½ year	(2553)

SURCHARGE
The surcharge required by 37 CFR 1.20(i)(2) (Fee Code 1558) must be paid as a condition of accepting unintentionally delayed payment of the maintenance fee.

MAINTENANCE FEE (37 CFR 1.20(e)-(g))
The appropriate maintenance fee must be submitted with this petition.

STATEMENT
THE UNDERSIGNED CERTIFIES THAT THE DELAY IN PAYMENT OF THE MAINTENANCE FEE TO THIS PATENT WAS UNINTENTIONAL

PETITIONER(S) REQUEST THAT THE DELAYED PAYMENT OF THE MAINTENANCE FEE BE ACCEPTED AND THE PATENT REINSTATED

THIS PORTION MUST BE COMPLETED BY THE SIGNATORY OR SIGNATORIES

37 CFR 1.378(d) states: "Any petition under this section must be signed by an attorney or agent registered to practice before the Patent and Trademark Office, or by the patentee, the assignee, or other party in interest."

I certify, in accordance with 37 CFR 1.4(d)(4) that I am

◉ An attorney or agent registered to practice before the Patent and Trademark Office

○ A sole patentee

○ A joint patentee; I certify that I am authorized to sign this submission on behalf of all the other patentees.

○ A joint patentee; all of whom are signing this e-petition

○ The assignee of record of the entire interest

Patent Practitioner			
A signature of the applicant or representative is required in accordance with 37 CFR 1.33 and 10.18. Please see 37 CFR 1.4(d) for the form of the signature			
Signature	/Vincent J. Ranucci/	Date (YYYY-MM-DD)	2007-06-13
Name	Vincent J. Ranucci	Registration Number	29579

This collection of information is required by 37 CFR 1.378(c). The information is required to obtain or retain a benefit by the public which is to file (and by the USPTO to process) an application. Confidentiality is governed by 35 U.S.C. 122 and 37 CFR 1.11 and 1.14. This collection is estimated to take 1 hour to complete, including gathering, preparing, and submitting the completed application form to the USPTO. Time will vary depending upon the individual case. Any comments on the amount of time you require to complete this form and/ or suggestions for reducing this burden, should be sent to the Chief Information Officer, U.S. Patent and Trademark Office, U.S. Department of Commerce, P.O. Box 1450, Alexandria, VA 22313-1450. DO NOT SEND FEES OR COMPLETED FORMS TO THIS ADDRESS. **This form can only be used when in conjunction with EFS-Web. If this form is mailed to the USPTO, it may cause delays in reinstating the patent.**

Privacy Act Statement

The Privacy Act of 1974 (P.L. 93-579) requires that you be given certain information in connection with your submission of the attached form related to a patent application or patent. Accordingly, pursuant to the requirements of the Act, please be advised that: (1) the general authority for the collection of this information is 35 U.S.C. 2(b)(2); (2) furnishing of the information solicited is voluntary; and (3) the principal purpose for which the information is used by the U.S. Patent and Trademark Office is to process and/or examine your submission related to a patent application or patent. If you do not furnish the requested information, the U.S. Patent and Trademark Office may not be able to process and/or examine your submission, which may result in termination of proceedings or abandonment of the application or expiration of the patent.

The information provided by you in this form will be subject to the following routine uses:

1. The information on this form will be treated confidentially to the extent allowed under the Freedom of Information Act (5 U.S.C. 552) and the Privacy Act (5 U.S.C. 552a). Records from this system of records may be disclosed to the Department of Justice to determine whether the Freedom of Information Act requires disclosure of these record s.

2. A record from this system of records may be disclosed, as a routine use, in the course of presenting evidence to a court, magistrate, or administrative tribunal, including disclosures to opposing counsel in the course of settlement negotiations.

3. A record in this system of records may be disclosed, as a routine use, to a Member of Congress submitting a request involving an individual, to whom the record pertains, when the individual has requested assistance from the Member with respect to the subject matter of the record.

4. A record in this system of records may be disclosed, as a routine use, to a contractor of the Agency having need for the information in order to perform a contract. Recipients of information shall be required to comply with the requirements of the Privacy Act of 1974, as amended, pursuant to 5 U.S.C. 552a(m).

5. A record related to an International Application filed under the Patent Cooperation Treaty in this system of records may be disclosed, as a routine use, to the International Bureau of the World Intellectual Property Organization, pursuant to the Patent Cooperation Treaty.

6. A record in this system of records may be disclosed, as a routine use, to another federal agency for purposes of National Security review (35 U.S.C. 181) and for review pursuant to the Atomic Energy Act (42 U.S.C. 218(c)).

7. A record from this system of records may be disclosed, as a routine use, to the Administrator, General Services, or his/her designee, during an inspection of records conducted by GSA as part of that agency's responsibility to recommend improvements in records management practices and programs, under authority of 44 U.S.C. 2904 and 2906. Such disclosure shall be made in accordance with the GSA regulations governing inspection of records for this purpose, and any other relevant (i.e., GSA or Commerce) directive. Such disclosure shall not be used to make determinations about individuals.

8. A record from this system of records may be disclosed, as a routine use, to the public after either publication of the application pursuant to 35 U.S.C. 122(b) or issuance of a patent pursuant to 35 U.S.C. 151. Further, a record may be disclosed, subject to the limitations of 37 CFR 1.14, as a routine use, to the public if the record was filed in an application which became abandoned or in which the proceedings were terminated and which application is referenced by either a published application, an application open to public inspections or an issued patent.

9. A record from this system of records may be disclosed, as a routine use, to a Federal, State, or local law enforcement agency, if the USPTO becomes aware of a violation or potential violation of law or regulation.

UNITED STATES PATENT AND TRADEMARK OFFICE

Commissioner for Patents
United States Patent and Trademark Office
P.O. Box 1450
Alexandria, VA 22313-1450
www.uspto.gov

In re Patent No. 6543059
Issue Date: April 8,2003
Application No. 09879869
Filed: June 8,2001
Attorney Docket No. NA-1166

:
:DECISION GRANTING PETITION
:UNDER 37 CFR 1.378(c)
:

This is a decision on the electronic petition, filed June 13,2007 ,under 37 CFR 1.378(c) to accept the unintentionally delayed payment of the 3.5 year maintenance fee for the above-identified patent.

The petition is GRANTED.

The maintenance fee is accepted, and the above-identified patent reinstated as of June 13,2007 . This decision also constitutes notice that the fee has been accepted. An electronic copy of the petition and this decision has been created as an entry in an Image File Wrapper. Nevertheless, petitioner should print and retain an independent copy

Telephone inquires related to this electronic decision should be directed to the Electronic Business Center at 1-866-217-9197.

UNITED STATES PATENT AND TRADEMARK OFFICE

COMMISSIONER FOR PATENTS
UNITED STATES PATENT AND TRADEMARK OFFICE
P.O. BOX 1450
ALEXANDRIA, VA 22313-1450
www.uspto.go

Paper No. 7

ALLAN M. SHAPIRO
SUITE 202
18401 BURBANK BLVD.
TARZANA, CA 91356

COPY MAILED
AUG 29 2003
OFFICE OF PETITIONS

In re Application of :
Marshall E. Lester :
Application No. 09/879,874 :
Filed: June 14, 2001 :
Attorney Docket No. :
LES571

This is a decision in response to the petition under 37 CFR 1.137(b), filed August 8, 2003, to revive the above-identified application.

This Petition is hereby **granted**.

The above-identified application became abandoned for failure to reply in a timely manner to the Notice to the non-final Office action, mailed November 16, 2002. The Office action set a three (3) month period for reply, and provided for extensions of time under 37 CFR 1.136(a). No reply having been received, the application became abandoned on February 17, 2003. A Notice of Abandonment was mailed on June 3, 2003.

With the instant petition, Petitioner has satisfied the requirements of a grantable petition under 37 CFR 1.137(b). An Amendment in response to the November 16, 2002 Office action is filed with the instant petition. Accordingly, the petition is granted.

This application is being forwarded to Technology Center Art Unit 2632 for processing of the Amendment and for continued examination in due course.

Telephone inquiries concerning this matter should be directed to the undersigned at (703) 305-0014.

Derek L. Woods
Petitions Attorney
Office of Petitions

UNITED STATES PATENT AND TRADEMARK OFFICE

UNITED STATES DEPARTMENT OF COMMERCE
United States Patent and Trademark Office
Address: COMMISSIONER FOR PATENTS
P.O. Box 1450
Alexandria, Virginia 22313-1450
www.uspto.gov

APPLICATION NO.	FILING DATE	FIRST NAMED INVENTOR	ATTORNEY DOCKET NO.	CONFIRMATION NO.
09/879,875	06/11/2001	Abu K. Eghan	X-901 US	4969

24309 7590 07/21/2004

XILINX, INC
ATTN: LEGAL DEPARTMENT
2100 LOGIC DR
SAN JOSE, CA 95124

EXAMINER
PERT, EVAN T

ART UNIT	PAPER NUMBER
2829	

DATE MAILED: 07/21/2004

Please find below and/or attached an Office communication concerning this application or proceeding.

UNITED STATES PATENT AND TRADEMARK OFFICE

COMMISSIONER FOR PATENTS
UNITED STATES PATENT AND TRADEMARK OFFICE
P.O. BOX 1450
ALEXANDRIA, VA 22313-1450
www.uspto.gov

Paper No. 041304

XILINX, INC
ATTN: LEGAL DEPARTMENT
2100 Logic Drive
San Jose, CA 95124

JUL 21 2004

In re Application of:
EGHAN *et al.*
Serial No.: 09/879,875
Filed: June 11, 2001
Attorney Docket No.: **X-901 US**

NOTICE OF WITHDRAWAL
FROM ISSUE
UNDER 37 CFR § 1.313

The purpose of this communication is to inform you that the above-identified application is being withdrawn from issue pursuant to 37 CFR § 1.313.

The above-identified application is hereby withdrawn from issue. The Notice of Allowance and Issue Fee Due and the Notice of Allowability mailed March 04, 2004, are hereby vacated.

The application is being withdrawn to permit reopening of prosecution. The reasons therefor will be communicated to you by the examiner.

Upon receipt of a new Notice of Allowance and Issue Fee Due, applicant may request that any previously submitted issue fee be applied toward payment of the issue fee in the amount identified on the new Notice of Allowance and Issue Fee Due. If the application is abandoned, applicant may request either a refund, or a credit to a Deposit Account.

Telephone inquires should be directed to Kamand Cuneo at (571) 272-1957.

The above-identified application is being forwarded to the examiner for prompt appropriate action.

Sharon A. Gibson, Director
Technology Center 2800
Semiconductors, Electrical and Optical
Systems and Components

UNITED STATES PATENT AND TRADEMARK OFFICE

Commissioner for Patents
United States Patent and Trademark Office
P.O. Box 1450
Alexandria, VA 22313-1450
www.uspto.gov

XILINX, Inc.
Attn: Legal Department
2100 Logic Drive
San Jose, CA 95124

COPY MAILED

JUL 15 2005

OFFICE OF PETITIONS

ON PETITION

In re Application of	:	
Abu K. Eghan, et al.	:	
Application No. 09/879,875	:	
Filed: June 11, 2001	:	
Attorney Docket No. X-901 US	:	

This is a decision on the petition under 37 CFR 1.137(b), filed August 16, 2004, to revive the above-identified application.

The petition is **GRANTED**.

A final Office action was mailed on January 17, 2003, which set a three-month shortened statutory period for reply. Since no reply was received and no extensions of time under the provisions of 37 CFR 1.136(a) were obtained, the application became abandoned on April 18, 2003.

A reply was submitted on June 24, 2003 and an Advisory Action was mailed on July 14, 2003, informing applicant that the amendment did not place the application in condition for allowance. Subsequently, a second amendment was submitted on July 22, 2003. A "Notice of Allowance and Fee(s) Due" was mailed to applicant on March 4, 2004. However, both amendments were submitted after the application became abandoned. Accordingly, the Office erred in mailing the Notice of Allowance and Fee(s) Due. As a result, the Technology Center Director withdrew the application from issue.

The petition satisfies the requirements of 37 CFR 1.137(b) in that petitioner has supplied (1) a proper reply; (2) the petition fee of $1330; and (3) an adequate statement of unintentional delay.

Telephone inquiries concerning this decision should be directed to the undersigned at (571) 272-3223.

This matter is being referred to Technology Center 2800.

Marianne E. Jenkins
Petitions Examiner
Office of Petitions

UNITED STATES PATENT AND TRADEMARK OFFICE

Commissioner for Patents
United States Patent and Trademark Office
P.O. Box 1450
Alexandria, VA 22313-1450
www.uspto.gov

DEPARTMENT OF THE ARMY SECOM
INTELLECTUAL PROPERTY DIVISION
AMSEL LG P NVEO (MILTON LEE)
10225 BURBECK RD
FORT BELVOIR VA 2206-5806

COPY MAILED

MAY 10 2005

OFFICE OF PETITIONS

In re Application of	:	
Trussell, et al.	:	
Application No. 09/879,928	:	ON PETITION
Filed: June 14, 2001	:	
Attorney Docket No. NVL-3247	:	

This is a decision on the petition under 37 CFR 1.183, filed September 15, 2004, to waive the requirements for an extension of time fee as set forth in 37 CFR 1.136(a) and 37 CFR 1.17(a).

The petition under 37 CFR 1.183 is **DISMISSED**.

On March 15, 2004, the Office mailed a non-final action. The Office action gave a facsimile number, 703-872-9306, to be used for transmissions. On May 12, 2004, petitioner faxed a response to 571-273-1664. Petitioner states that he believes this fax number was given to him during an April 29, 2004 interview with the Examiner (the fax number is the number for the Examiner's supervisor, Thomas Tom). According to petitioner, he contacted the Examiner during the last week of August and learned that no response had been received. Accordingly, petitioner re-transmitted the response to the 703-872-9306 number on September 7, 2004. To make the response timely petitioner obtained a three month extension of time.

37 CFR 1.136(a)(1) states, in relevant part:

> If an applicant is required to reply within a nonstatutory or shortened statutory period time period, applicant may extend the time period for reply up to the earlier of the expiration of any maximum period set by statute or five months after the time period set for reply, if a petition for an extension of time and the fee set forth in § 1.17(a) are filed.

37 CFR 1.183 states:

> In an extraordinary situation, when justice requires, any requirement of the regulations in this part which is not a requirement of the statutes may be suspended or waived by the Commissioner or the Commissioner's designee, *sua sponte*, or on petition of the interested party, subject to such other requirements as may be imposed. Any petition under this section must be accompanied by the petition fee set forth in § 1.17(h).

Petitioner has not demonstrated that this is an extraordinary situation where justice requires waiver of the rules. The March 15, 2004 Office action set forth the official facsimile number for facsimile transmissions. Accordingly, the instant scenario is one that could have been avoided with the reasonable exercise of due care. In addition, MPEP 501.02 states that, "[e]ffective December 1, 2003, all patent application related correspondence transmitted by facsimile **must** be directed to the central facsimile number, (703) 872-9306, with a few exceptions below. Replies to Office actions including after-final amendments that are transmitted by facsimile **must** be directed to the central facsimile number" (emphasis added). However, "[u]nofficial correspondence such as draft proposed amendments for interviews may continue to be transmitted by facsimile to the Technology Centers (TCs). Office personnel should not use their personal facsimile numbers for official application related correspondence." MPEP 501.02.

The application file is being forwarded to the Office of Patent Publication for processing into a patent.

Telephone inquiries regarding this decision should be directed to the undersigned at (571)272-3207.

Cliff Congo

Cliff Congo
Petitions Attorney
Office of Petitions

UNITED STATES PATENT AND TRADEMARK OFFICE

COMMISSIONER FOR PATENTS
UNITED STATES PATENT AND TRADEMARK OFFICE
P.O. BOX 1450
ALEXANDRIA, VA 22313-1450
www.uspto.gov

Mr. Samuel H. Dworetsky
AT&T Corp
One AT&T Way
Room 2A-207
Bedminster, NJ 07921

COPY MAILED

OCT 3 1 2005

OFFICE OF PETITIONS

In re Application of:	:	
Radhika R. Roy	:	
Application No. 09/880,027	:	DECISION ON
Filed: June 14, 2001	:	PETITION
Title of Invention: REAL-TIME	:	
MULTIMEDIA CONFERENCING OVER AN	:	
ATM NETWORK USING AN INTELLIGENT	:	
ATM CABLE MODEM AND HYBRID	:	
FIBER-COAX ACCESS	:	

This is a decision on the petition for revival of an application abandoned unintentionally under 37 CFR 1.137(b), filed July 29, 2005.

This Petition is hereby **granted**.

The above-identified application became abandoned for failure to reply in a timely manner to the nonfinal Office action, mailed October 7, 2004. The Notice set a shortened statutory period for reply of three (3) months from the mail date of the Notice, and also provided for extensions of time under 37 CFR 1.136(a). No reply having been received, the application became abandoned January 8, 2005. A Notice of Abandonment was mailed April 19, 2005.

With the instant petition, Applicant has filed an Amendment in response to the non-final Office action.

The Associate Power of Attorney has **NOT** been entered and made of record.

Applicant is advised that, effective June 25, 2004, the Associate Power of Attorney practice has been eliminated. The

Office no longer accepts Associate Powers of Attorney. See MPEP 402.02; Rev. 3, August 2005.

The Change of Correspondence Address has been entered and made of record.

This application is being returned to Technology Center 2661 for processing of the Amendment, filed July 29, 2005, in due course.

Telephone inquiries concerning this matter should be directed to the undersigned at (571) 272-3232.

Derek L. Woods

Derek L. Woods
Attorney
Office of Petitions
Office of the Deputy Commissioner
for Patent Examination Policy

UNITED STATES PATENT AND TRADEMARK OFFICE

COMMISSIONER FOR PATENTS
UNITED STATES PATENT AND TRADEMARK OFFICE
P.O. BOX 1450
ALEXANDRIA, VA 22313-1450
WWW.USPTO.GOV

COPY MAILED

AUG 1 8 2003

OFFICE OF PETITIONS

Paper No.

GREENBLUM & BERNSTEIN
1950 ROLAND CLARKE PLACE
RESTON VA 20191

In re Application of
Thomas Thoroe Scherb et al
Application No. 09/880,061
Filed: June 14, 2001
Attorney Docket No. P20845

ON PETITION

This is a decision on the petition, filed August 15, 2003, under 37 CFR 1.313(c)(2) to withdraw the above-identified application from issue after payment of the issue fee.

The petition is **GRANTED**.

The above-identified application is withdrawn from issue for consideration of a submission under 37 CFR 1.114 (request for continued examination). See 37 CFR 1.313(c)(2).

Petitioner is advised that the issue fee paid on July 7, 2003 in the above-identified application cannot be refunded. If, however, the above-identified application is again allowed, petitioner may request that it be applied towards the issue fee required by the new Notice of Allowance.[1]

Telephone inquiries should be directed to the undersigned at (703) 305-8859.

After receipt of the file in the Office of Petitions, the application will be forwarded to Technology Center AU 1731 for processing of the request for continued examination under 37 CFR 1.114.

Karen Creasy

Karen Creasy
Petitions Examiner
Office of Petitions
Office of the Deputy Commissioner
for Patent Examination Policy

---

[1] The request to apply the issue fee to the new Notice may be satisfied by completing and returning the new Issue Fee Transmittal Form PTOL-85(b), which includes the following language thereon: "Commissioner for Patents is requested to apply the Issue Fee and Publication Fee (if any) or re-apply any previously paid issue fee to the application identified above." Petitioner is advised that, whether a fee is indicated as being due or not, the Issue Fee Transmittal Form **must** be completed and timely submitted to avoid abandonment. Note the language in bold text on the first page of the Notice of Allowance and Fee(s) Due (PTOL-85).

UNITED STATES PATENT AND TRADEMARK OFFICE

UNDER SECRETARY OF COMMERCE FOR INTELLECTUAL PROPERTY AND
DIRECTOR OF THE UNITED STATES PATENT AND TRADEMARK OFFICE
WASHINGTON, DC 20231
www.uspto.gov

MAILED

SEP 10 2002

DIRECTOR'S OFFICE
TECHNOLOGY CENTER 1600

William T. Ellis
Foley & Lardner
Washington Harbour
3000 K Street N.W., Suite 500
Washington, DC 20007-5109

Paper No. 7

In re application of
Mike Burns
Application No. 09/880,078
Filed: June 14, 2001
For: ELECTRONIC SPREAD TRADING TOOL

: **DECISION ON PETITION**
: **TO MAKE SPECIAL**
: **(ACCELERATED EXAMINATION)**

This is in response to the petition filed on November 13, 2001 to make the above-identified application special on the basis of special examining procedure for certain new applications - accelerated examination as set forth in MPEP § 708.02 VIII. The delay in treating this petition is sincerely regretted.

The requirements for granting special status under this section are: (A) a petition to make special accompanied by the fee set forth in 37 CFR 1.17(i); (B) all claims being directed to a single invention, or an election without traverse if the Office determines that all the claims are not directed to a single invention; (C) a statement that a pre-examination search was made listing the field of search; (D) one copy of each of the references deemed most closely related to the subject matter encompassed by the claims if said references are not already of record; and (E) a detailed discussion of how the claimed subject matter is patentable over the references.

Since all of the requirements for special status under MPEP § 708.02 VIII have been met, the petition is **GRANTED**.

The examiner is directed (1) to make an interference search for possible interfering applications, (2) to promptly examine this application out of turn, and (3) if any interfering application is discovered, to examine such application simultaneously and state in the first official letter of such application that it is being taken out of turn because of a possible interference.

Petitioner is advised that this application will continue to be special, throughout its entire prosecution and pendency, including interference or appeal, if any, only if petitioner makes a prompt ***bona fide*** effort, in response to each Office action, to place the application in condition for allowance, even if it is necessary to conduct an interview with the examiner to accomplish this purpose.

SUMMARY: Petition to Make Special **GRANTED**.

Steven N. Meyers
Special Programs Examiner
Technology Center 3600
(703) 308-3868

SNM: 9/9/02

UNITED STATES PATENT AND TRADEMARK OFFICE

Commissioner for Patents
United States Patent and Trademark Office
P.O. Box 1450
Alexandria, VA 22313-1450
www.uspto.gov

Date : 10/12/07

Patent No. : 7243083 B2
Ser. No. : 09/880,078
Inventor(s) : BURNS, MIKE
Issued : 07/10/07
Title : **ELECTRONIC SPREAD TRADING TOOL**
Docket No. : 024051-0150

Re: Request for Certificate of Correction

Consideration has been given your request for the issuance of a certificate of correction for the above-identified patent under the provisions of Rule(s) 1.322 and/or 1.323.

Assignees' names and addresses (assignment data) printed in a patent, are based *solely* on information supplied in the appropriate space for identifying the assignment data, i.e., item 3 of the Issue Fee Transmittal Form PTOL-85B. Granting of a request under 37 CFR 3.81(b) is required to correct applicant's error providing ***incorrect or erroneous*** assignment data, *before* issuance of a Certificate of Correction, under 37 CFR 1.323 *(see Manual of Patent Examining Procedures (M.P.E.P) Chp.1400, sect. 1481).* This procedure is required *at any time after the issue fee is paid*, including after issuance of the patent.

In view of the foregoing, your request, in this mater, is hereby denied.

A request to correct the Assignee under 37 CFR 3.81(b) should include:

A. **the processing fee set forth in 37 CFR 1.117(h) (currently $130);**
B. a statement that the failure to include the correct assignee name on the PTOL-85B was inadvertent; and
C. a copy of the Notice of Recordation of Assignment Document, reflecting the reel and frame number where the assignment(s) is recorded and/or reflecting proof of *the date* the assignment was submitted for recordation.

In the Request, Applicant(s) may request that the file be forwarded to Certificates of Correction Branch, for issuance of a Certificate of Correction, if the Request is granted.

Any request under 37 CFR 3.81(b) should be directed to the following address or facsimile number:

By mail: Mail Stop PETITIONS
Commissioner for Patents
Post Office Box 1450
Alexandria, VA 22313-1450

By hand: Customer Service Window
Mail Stop Petitions
Randolph Building
401 Dulany Street
Alexandria, VA 22314

By fax: (703) 872-9306
ATTN: Office of Petitions

If a fee (currently $100) was previously submitted for consideration of a Request for Certificate of Correction, under CFR 1.323, to correct assignment data, no additional fee is required.

Lamonte M. Newsome
For Cecelia Newman
Decisions & Certificates
of Correction Branch
(703) 308-9390 #112 or (703) 308-8309

FOLEY AND LARDNER LLP
SUITE 500
3000 K STREET NW
WASHINGTON DC 20007

LMN

UNITED STATES PATENT AND TRADEMARK OFFICE

Commissioner for Patents
United States Patent and Trademark Office
P.O. Box 1450
Alexandria, VA 22313-1450
www.uspto.gov

DEBRA GLAISTER
MORRISON AND FOERSTER LLP
755 PAGE MILL RD
PALO ALTO, CA 94304

COPY MAILED
JUL 12 2006
OFFICE OF PETITIONS

In re Application of	:	
Anton Wellstein	:	
Application No. 09/880,097	:	DECISION ON PETITION
Filed: June 14, 2001	:	TO WITHDRAW
Attorney Docket No. 102728-P01-004	:	FROM RECORD
	:	

This is a decision on the Request to Withdraw as attorney or agent of record under 37 C.F.R. § 1.36(b), filed October 19, 2005.

The request is **NOT APPROVED** as moot.

A review of the file record indicates that the power of attorney to Debra J. Glaister has been revoked by the assignee of the patent application. Accordingly, the request to withdraw under 37 C.F.R. § 1.36(b) is moot.

All future communications from the Office will continue to be directed to the below-listed address until otherwise notified by applicant.

Telephone inquires concerning this decision should be directed to Irvin Dingle at 571-272- 3210.

Amelia Au
Petitions Examiner
Office of Petitions

cc: Fish & Neave IP Group
Ropes & Gray LLP
One International Place
Boston, MA 02110-2624

UNITED STATES PATENT AND TRADEMARK OFFICE

Commissioner for Patents
United States Patent and Trademark Office
Washington, D.C. 20231
www.uspto.gov

Paper No. 7

BANNER & WITCOFF
1001 G STREET N W
SUITE 1100
WASHINGTON DC 20001

COPY MAILED

APR 19 2002

OFFICE OF PETITIONS

In re Application of:
Itzik Ben-Bassat, Ido Ophir, Rafi Boneh, Tal Marcus, David Rahamin, Yariv Hayoun, Eran Ridel, Oren Sheich, Amir Comforti, Ilan Ossdom, Ofer Shafir, Ariel Goldfarb, and Yossi Gal
Application No. 09/880,103
Filed: June 14, 2001
Title of Invention: SATELLITE COMMUNICATION CARD

DECISION REFUSING STATUS UNDER 37 CFR 1.47(a)

This is in response to a Petition Under 37 C.F.R. 1.47(a), filed January 14, 2002, to allow the other inventor(s) to proceed with the application on behalf of himself or herself and the nonsigning inventor(s).

The petition is **dismissed**.

The above-identified application was filed on June 14, 2001, without a fully executed oath or declaration. Accordingly, on August 13, 2001, a "Notice to File Missing Parts of Nonprovisional Application" (hereinafter "Notice"), was mailed to Petitioner. The Notice required, in relevant part, a fully executed oath or declaration. Applicant was given two-months from the date of the Notice within which to file a fully executed oath or declaration. A three month extension of time fee has been charged to deposit account 19-0733 as authorized in the instant petition.

The petition is accompanied by the declaration of Joseph P. Curtin, which avers, in relevant part, that a copy of the declaration and assignment was sent to the nonsigning inventors on December 4, 2001, and no response has been received.

A grantable petition under 37 CFR 1.47(a) requires: (1) proof that the non-signing inventor cannot be reached or refuses to sign the oath or declaration after having been presented with the application papers (specification, claims and drawings); (2) an acceptable oath or declaration in compliance with 35 U.S.C. §§ 115 and 116; (3) the petition fee; and (4) a statement of the last known address of the non-signing inventor.

As to item (1), the applicant has failed to establish that the nonsigning former Administrator was ever presented with the application for signature. The Manual of Patent Examining Procedure ("MPEP") states that

> A refusal by an inventor to sign an oath or declaration when the inventor has not been presented

> with the application papers does not itself suggest that the inventor is refusing to join the application unless it is clear that the inventor understands exactly what he or she is being asked to sign and refuses to accept the application papers. A copy of the application papers should be sent to the last known address of the nonsigning inventor, or, if the nonsigning inventor is represented by counsel, to the address of the nonsigning inventor's attorney.

MPEP 409.03(d).

Petitioner must send a copy of the entire application, including the specification, claims and drawings, along with the oath or declaration to the nonsigning inventors before refusal can be alleged.

Further correspondence with respect to this matter should be addressed as follows:

By mail: Commissioner for Patents
Box DAC
Washington, D.C. 20231

By FAX: (703) 308-6916
Attn: Office of Petitions

By hand: Crystal Plaza Four, Suite 3C23
2201 S. Clark Place
Arlington, VA 22202

Telephone inquiries related to this decision may be directed to Petitions Attorney Derek L. Woods at (703) 305-0014.

Beverly M. Flanagan
Supervisory Petitions Examiner
Office of Petitions
Office of the Deputy Commissioner
for Patent Examination Policy

UNITED STATES PATENT AND TRADEMARK OFFICE

Commissioner for Patents
United States Patent and Trademark Office
Washington, D.C. 20231
www.uspto.gov

Paper No. 18

COPY MAILED

JUN 2 6 2002

OFFICE OF PETITIONS

BANNER & WITCOFF
1001 G STREET N W
SUITE 1100
WASHINGTON DC 20001

In re Application of:	:	DECISION REFUSING
Itzik Ben-Bassat et al.	:	STATUS
Application No. 09/880,103	:	UNDER 37 CFR 1.47(a)
Filed: June 14, 2001	:	
Attorney Docket Number: 05193.00009	:	

This is a decision on the Petition under 37 CFR 1.137(b), filed October 5, 2001, to revive the above-identified application.

The petition is **dismissed**.

Any request for reconsideration of this decision must be submitted within TWO (2) MONTHS from the mail date of this decision. Extensions of time under 37 CFR 1.136(a) are permitted. The reconsideration request should include a cover letter entitled "Renewed Petition under 37 CFR 1.137(b)." This is **not** final agency action within the meaning of 5 U.S.C. § 704.

Background

The application became abandoned for failure to timely and properly reply to the Notice to File Missing Parts of Application ("Notice") mailed August 13, 2001. The Notice set a period for reply of two (2) months from the mail date of the Notice, and required, in relevant part, a fully executed oath or declaration.

A petition under 37 CFR 1.47(a) and a request for a three (3) month extension of time were filed on Monday, January 14, 2002. The petition was dismissed for failing to meet the requirements of a grantable petition under 37 CFR 1.47(a). The application subsequently went abandoned on January 14, 2002. The mailing of this decision precedes the mailing of a Notice of Abandonment.

The Instant Petition

With the instant petition, petitioner files an executed oath/declaration noting the joinder of the inventors. However, it is noted that the residence, citizenship, and post office address of the thirteenth inventor have been altered.

Applicable Law

A grantable petition to revive an abandoned application under 37 CFR 1.137(b) must be accompanied by: (**1**) the required reply (unless previously filed), which may met by the filing of a notice of appeal and the requisite fee; a continuing application; an amendment or request for reconsideration which prima facie places the application in condition for allowance, or a first or second submission under 37 CFR 1.129(a) if the application has been pending for at least two years as of June 8, 1995, taking into account any reference made in such application to any

earlier filed application under 35 USC 120, 121 and 365(c); (**2**) the petition fee required by 37 CFR 1.17(m); (**3**) a statement that the entire delay in filing the required reply from the due date for the reply until the filing of a grantable petition pursuant to 37 CFR 1.137(b) was unintentional; and (**4**) a terminal disclaimer (and fee as set forth in 37 CFR 1.20(d)). This petition lacks item (**1**) above.

As to item (1), the oath or declaration has been altered, however, the alterations have not been initialed and/or dated as is required by 37 CFR 1.52(c). A properly executed oath or declaration which complies with 37 CFR 1.67(a) is required. See, MPEP 605.04(a).

Further correspondence with respect to this matter should be addressed as follows:

By mail: Commissioner for Patents
Box DAC
Washington, D.C. 20231

By FAX: (703) 308-6916
Attn: Office of Petitions

By hand: Crystal Plaza Four, Suite 3C23
2201 S. Clark Place
Arlington, VA 22202-3513

Telephone inquiries concerning this matter should be directed to the undersigned at (703) 305-0014.

Derek L. Woods
Petitions Attorney
Office of Petitions
Office of the Deputy Commissioner
for Patent Examination Policy

UNITED STATES PATENT AND TRADEMARK OFFICE

Commissioner for Patents
United States Patent and Trademark Office
Washington, D.C. 20231
www.uspto.gov

Paper No. 10

BANNER & WITCOFF
1001 G STREET N W
SUITE 1100
WASHINGTON DC 20001

COPY MAILED

AUG 1 4 2002

OFFICE OF PETITIONS

In re Application of: :
Itzik Ben-Bassat et al. :
Application No. 09/880,103 :
Filed: June 14, 2001 :
Attorney Docket Number: 05193.00009:

DECISION ON PETITION

This is a decision on the renewed Petition under 37 CFR 1.137(b), filed July 19, 2002, to revive the above-identified application.

The petition is **granted**.

Background

The application became abandoned for failure to timely and properly reply to the Notice to File Missing Parts of Application ("Notice") mailed August 13, 2001. The Notice set a period for reply of two (2) months from the mail date of the Notice, and required, in relevant part, a fully executed oath or declaration.

A petition under 37 CFR 1.47(a) and a request for a three (3) month extension of time were filed on Monday, January 14, 2002. The petition was dismissed for failing to meet the requirements of a grantable petition under 37 CFR 1.47(a). The application subsequently went abandoned on January 14, 2002.

A petition under 37 CFR 1.137(b) was dismissed by this Office in a decision mailed on June 26, 2002, because the oath or declaration had been altered, however, the alterations had not been initialed and/or dated as is required by 37 CFR 1.52(c).

The instant petition

With the instant petition, Petitioner has complied with the above requirement.

This application is being forwarded to the Office of Initial Patent Examination for further processing.

Telephone inquiries concerning this matter should be directed to the undersigned at (703) 305-0014.

Derek L. Woods
Petitions Attorney
Office of Petitions
Office of the Deputy Commissioner
for Patent Examination Policy

PTO/SB/66 (03-09)
Approved for use through 03/31/2012. OMB 0651-0016
U.S. Patent and Trademark Office: U.S. DEPARTMENT OF COMMERCE
Under the Paperwork Reduction Act of 1995, no persons are required to respond to a collection of information unless it displays valid OMB control number.

PETITION TO ACCEPT UNINTENTIONALLY DELAYED PAYMENT OF MAINTENANCE FEE IN AN EXPIRED PATENT (37 CFR 1.378(c))

Patent Number	Issue Date (YYYY-MM-DD)	Application Number	Filing Date (YYYY-MM-DD)	Docket Number (if applicable)
6,974,667	2005-12-13	09/880,107	2001-06-14	044921-5028

CAUTION: Maintenance fee (and surcharge, if any) payment must correctly identify: (1) the patent number and (2) the application number of the actual U.S. application leading to issuance of that patent to ensure the fee(s) is/are associated with the correct patent. 37 CFR 1.366(c) and (d).

SMALL ENTITY
☒ Patentee claims, or has previously claimed, small entity status. See 37 CFR 1.27.

LOSS OF ENTITLEMENT TO SMALL ENTITY STATUS
☐ Patentee is no longer entitled to small entity status. See 37 CFR 1.27(g)

NOT Small Entity		Small Entity	
Fee	Code	Fee	Code
○ 3 ½ year	(1551)	◉ 3 ½ year	(2551)
○ 7 ½ year	(1552)	○ 7 ½ year	(2552)
○ 11 ½ year	(1553)	○ 11 ½ year	(2553)

SURCHARGE
The surcharge required by 37 CFR 1.20(i)(2) (Fee Code 1558) must be paid as a condition of accepting unintentionally delayed payment of the maintenance fee.

MAINTENANCE FEE (37 CFR 1.20(e)-(g))
The appropriate maintenance fee must be submitted with this petition.

STATEMENT
THE UNDERSIGNED CERTIFIES THAT THE DELAY IN PAYMENT OF THE MAINTENANCE FEE TO THIS PATENT WAS UNINTENTIONAL

PETITIONER(S) REQUEST THAT THE DELAYED PAYMENT OF THE MAINTENANCE FEE BE ACCEPTED AND THE PATENT REINSTATED

THIS PORTION MUST BE COMPLETED BY THE SIGNATORY OR SIGNATORIES

37 CFR 1.378(d) states: "Any petition under this section must be signed by an attorney or agent registered to practice before the Patent and Trademark Office, or by the patentee, the assignee, or other party in interest."

I certify, in accordance with 37 CFR 1.4(d)(4) that I am

◉ An attorney or agent registered to practice before the Patent and Trademark Office

○ A sole patentee

○ A joint patentee; I certify that I am authorized to sign this submission on behalf of all the other patentees.

○ A joint patentee; all of whom are signing this e-petition

○ The assignee of record of the entire interest

Patent Practitioner			
A signature of the applicant or representative is required in accordance with 37 CFR 1.33 and 10.18. Please see 37 CFR 1.4(d) for the form of the signature			
Signature	/Robert Smyth/	Date (YYYY-MM-DD)	2010-04-30
Name	Robert Smyth	Registration Number	50801

This collection of information is required by 37 CFR 1.378(c). The information is required to obtain or retain a benefit by the public which is to file (and by the USPTO to process) an application. Confidentiality is governed by 35 U.S.C. 122 and 37 CFR 1.11 and 1.14. This collection is estimated to take 1 hour to complete, including gathering, preparing, and submitting the completed application form to the USPTO. Time will vary depending upon the individual case. Any comments on the amount of time you require to complete this form and/ or suggestions for reducing this burden, should be sent to the Chief Information Officer, U.S. Patent and Trademark Office, U.S. Department of Commerce, P.O. Box 1450, Alexandria, VA 22313-1450. DO NOT SEND FEES OR COMPLETED FORMS TO THIS ADDRESS. **This form can only be used when in conjunction with EFS-Web. If this form is mailed to the USPTO, it may cause delays in reinstating the patent.**

Privacy Act Statement

The Privacy Act of 1974 (P.L. 93-579) requires that you be given certain information in connection with your submission of the attached form related to a patent application or patent. Accordingly, pursuant to the requirements of the Act, please be advised that: (1) the general authority for the collection of this information is 35 U.S.C. 2(b)(2); (2) furnishing of the information solicited is voluntary; and (3) the principal purpose for which the information is used by the U.S. Patent and Trademark Office is to process and/or examine your submission related to a patent application or patent. If you do not furnish the requested information, the U.S. Patent and Trademark Office may not be able to process and/or examine your submission, which may result in termination of proceedings or abandonment of the application or expiration of the patent.

The information provided by you in this form will be subject to the following routine uses:

1. The information on this form will be treated confidentially to the extent allowed under the Freedom of Information Act (5 U.S.C. 552) and the Privacy Act (5 U.S.C. 552a). Records from this system of records may be disclosed to the Department of Justice to determine whether the Freedom of Information Act requires disclosure of these records.

2. A record from this system of records may be disclosed, as a routine use, in the course of presenting evidence to a court, magistrate, or administrative tribunal, including disclosures to opposing counsel in the course of settlement negotiations.

3. A record in this system of records may be disclosed, as a routine use, to a Member of Congress submitting a request involving an individual, to whom the record pertains, when the individual has requested assistance from the Member with respect to the subject matter of the record.

4. A record in this system of records may be disclosed, as a routine use, to a contractor of the Agency having need for the information in order to perform a contract. Recipients of information shall be required to comply with the requirements of the Privacy Act of 1974, as amended, pursuant to 5 U.S.C. 552a(m).

5. A record related to an International Application filed under the Patent Cooperation Treaty in this system of records may be disclosed, as a routine use, to the International Bureau of the World Intellectual Property Organization, pursuant to the Patent Cooperation Treaty.

6. A record in this system of records may be disclosed, as a routine use, to another federal agency for purposes of National Security review (35 U.S.C. 181) and for review pursuant to the Atomic Energy Act (42 U.S.C. 218(c)).

7. A record from this system of records may be disclosed, as a routine use, to the Administrator, General Services, or his/her designee, during an inspection of records conducted by GSA as part of that agency's responsibility to recommend improvements in records management practices and programs, under authority of 44 U.S.C. 2904 and 2906. Such disclosure shall be made in accordance with the GSA regulations governing inspection of records for this purpose, and any other relevant (i.e., GSA or Commerce) directive. Such disclosure shall not be used to make determinations about individuals.

8. A record from this system of records may be disclosed, as a routine use, to the public after either publication of the application pursuant to 35 U.S.C. 122(b) or issuance of a patent pursuant to 35 U.S.C. 151. Further, a record may be disclosed, subject to the limitations of 37 CFR 1.14, as a routine use, to the public if the record was filed in an application which became abandoned or in which the proceedings were terminated and which application is referenced by either a published application, an application open to public inspections or an issued patent.

9. A record from this system of records may be disclosed, as a routine use, to a Federal, State, or local law enforcement agency, if the USPTO becomes aware of a violation or potential violation of law or regulation.

UNITED STATES PATENT AND TRADEMARK OFFICE

Commissioner for Patents
United States Patent and Trademark Office
P.O. Box 1450
Alexandria, VA 22313-1450
www.uspto.gov

In re Patent No. 6974667
Issue Date: December 13,2005
Application No. 09880107
Filed: June 14,2001
Attorney Docket No. 044921-5028

:
:DECISION GRANTING PETITION
:UNDER 37 CFR 1.378(c)
:

This is a decision on the electronic petition, filed April 30,2010 ,under 37 CFR 1.378(c) to accept the unintentionally delayed payment of the 3.5 year maintenance fee for the above-identified patent.

The petition is **GRANTED**.

The maintenance fee is accepted, and the above-identified patent reinstated as of April 30,2010 .
This decision also constitutes notice that the fee has been accepted. An electronic copy of the petition and this decision has been created as an entry in the Image File Wrapper. Nevertheless, petitioner should print and retain an independent copy.

Telephone inquiries related to this electronic decision should be directed to the Electronic Business Center at 1-866-217-9197.

UNITED STATES PATENT AND TRADEMARK OFFICE

COMMISSIONER FOR PATENTS
UNITED STATES PATENT AND TRADEMARK OFFICE
P.O. BOX 1450
ALEXANDRIA, VA 22313-1450
www.uspto.gov

JAN 13 2004

Paper No. 7

In re Application of
Toshio Sato *et al*
Application No. 09/880,112
Filed: June 14, 2001
Attorney Docket No. 209401US2

: DECISION ON PETITION

This is a decision on the petition filed by on December 30, 2003. Petitioners state that they are in receipt of a PTO Communication holding this application to have become abandoned for failure to file a reply to the Office action dated August 13, 2002. The record fails to show that any such PTO Communication has been mailed, and petitioners are requested to assist in establishing a complete application file by sending a copy of that Communication to the undersigned by facsimile transmission to (703) 305-3762 at petitioners' earliest convenience. The petition is considered pursuant to 37 CFR 1.181, and no fee is required.

The petition is granted.

Although the record does not contain a copy of holding that this application stands abandoned, inspection of the file shows that an Office letter was in fact mailed to petitioners on August 13, 2002, and that no reply thereto is in the record. Thus, even in the absence of a Notice of Abandonment, this application stands technically abandoned.

Petitioners allege, however, that a proper and timely reply to the Office letter in question was in fact filed on November 8, 2002, within the period set for response to that letter. In support of this allegation, petitioners have furnished a copy of that reply, together with a copy of a receipt showing that the reply was in fact received in the Office on November 8, 2002. This evidence establishes that this application is not in fact abandoned.

Accordingly, the application is restored to pending status. If in fact a PTO Communication held this application to have become abandoned, that holding is vacated. The application is being forwarded to the Head Supervisory Applications Examiner in Technology Center 3700 to change the correspondence address in the PALM system to agree with the address appearing at the bottom of this decision. It is noted that the Customer Number associated with this application is for that address. Thereafter, the application will be forwarded to the examiner for action on the reply filed on November 8, 2002.

PETITION GRANTED.

E. Rollins Cross, Director
Technology Center 3700

Oblon Spivak McClelland Maier & Neustadt, PC
1940 Duke Street
Alexandria, VA 22314

UNITED STATES PATENT AND TRADEMARK OFFICE

COMMISSIONER FOR PATENTS
UNITED STATES PATENT AND TRADEMARK OFFICE
WASHINGTON, D.C. 20231
www.uspto.gov

Paper No. 6

EDWARD G. POPLAWSKI
SIDLEY AUSTIN BROWN & WOOD LLP
555 WEST FIFTH STREET, SUITE 4000
LOS ANGELES, CA 90013-1010

COPY MAILED

MAR 2 9 2002

OFFICE OF PETITIONS

In re Application of
James J. Hickman et al.
Application No. 09/880,138
Filed: June 12, 2001
Attorney Docket No. 18805-81106

ON PETITION

This is in response to the petition under 37 CFR 1.47(a), filed February 27, 2002 (certificate of mailing February 11, 2002).

The petition is dismissed.

Rule 47 applicant is given TWO MONTHS from the mailing date of this decision to reply, correcting the below-noted deficiencies. Any reply should be entitled "Request for Reconsideration of Petition Under 37 CFR 1.47(a)," and should only address the deficiencies noted below, except that the reply may include an oath or declaration executed by the non-signing inventor. **FAILURE TO RESPOND WILL RESULT IN ABANDONMENT OF THE APPLICATION.** Any extensions of time will be governed by 37 CFR 1.136(a).

A grantable petition under 37 CFR 1.47(a) requires: (1) proof that the non-signing inventor cannot be reached or refuses to sign the oath or declaration after having been presented with the application papers (specification, claims and drawings); (2) an acceptable oath or declaration in compliance with 35 U.S.C. §§ 115 and 116; (3) the petition fee; and (4) a statement of the last known address of the non-signing inventor. Applicant lacks item (2) and set forth above.

As to item (2), the declaration is not in compliance with 37 CFR 1.63(c) in that the declaration fails to set forth the residence and mailing address of nonsigning inventor David A. Stenger. Specifically, 37 CFR 1.63(c) states:

> Unless such information is supplied on an application data sheet in accordance with § 1.76, the oath or declaration must also identify:
> (1) The mailing address, and the residence if an inventor lives at a location which is different from where the inventor customarily receives mail, of each inventor ***.

Since the mailing address of inventor Stenger is not his residence address, the declaration is not in compliance with 37 CFR 1.63(c). Accordingly, a declaration in compliance with 37 CFR 1.63(c) and 1.64 signed by all the signing inventors on behalf of the nonsigning inventor must be submitted for a grantable petition under 37 CFR 1.47(a). Note MPEP Sections 409.03(a); 602; 605.02; and 605.03. Note also 37 CFR 1.76

The middle initial of the second inventor has been changed from "G." to "A."; Office records have been corrected to reflect the correction of the second inventor's name. A corrected filing receipt accompanies this decision.

Further correspondence with respect to this matter should be addressed as follows:

By mail: U.S. Patent and Trademark Office
Box DAC, P.O. Box 2327
Arlington, VA 22202

By FAX: (703) 308-6916
Attn: Office of Petitions

By hand: Crystal Plaza Four, Suite 3C23
2201 S. Clark Place
Arlington, VA 22202

Telephone inquiries related to this decision should be directed to Irvin Dingle at (703) 306-5684.

Frances Hicks

Frances Hicks
Lead Petitions Examiner
Office of Petitions
Office of the Deputy Commissioner
for Patent Examination Policy

Attachment: corrected filing receipt

UNITED STATES PATENT AND TRADEMARK OFFICE

COMMISSIONER FOR PATENT
UNITED STATES PATENT AND TRADEMARK OFFIC
WASHINGTON, D.C. 20231
www.uspto.go

Paper No. 9

EDWARD G. POPLAWSKI
SIDLEY AUSTIN BROWN & WOOD LLP
555 WEST FIFTH STREET, SUITE 4000
LOS ANGELES, CA 90013-1010

COPY MAILED

NOV 2 5 2002

OFFICE OF PETITIONS

In re Application of
James J. Hickman et al
Application No. 09/880,138
Filed: June 12, 2001
For: BIOSENSOR FOR USE IN TOXICITY ASSESSMENT AND PHARMACOLOGICAL SCREENING

: DECISION GRANTING
:STATUS UNDER 37 CFR 1.47(a)

This is in response to the petition filed May 13, 2002 and supplemented on November 21, 2002, requesting reconsideration of a decision mailed March 29, 2002, which refused to accord 37 CFR 1.47(a) status to the above-identified application.

The petition is granted.

Petitioner has shown that the non-signing inventor has refused to join in the filing of the above-identified application.

The above-identified application and papers have been reviewed and found in compliance with 37 CFR 1.47(a). This application is hereby accorded Rule 1.47(a) status. As provided in Rule 1.47(c), this Office will forward notice of this application's filing to the non-signing inventor at the address given in the petition. Notice of the filing of this application will also be published in the Official Gazette.

Telephone inquiries regarding this decision should be directed to Irvin Dingle at (703) 306-5684.

This application is being forwarded to the Initial Patent Examination Unit.

Frances Hicks
Lead Petitions Examiner
Office of Petitions
Office of the Deputy Commissioner
for Patent Examination Policy

UNITED STATES PATENT AND TRADEMARK OFFICE

COMMISSIONER FOR PATENT
UNITED STATES PATENT AND TRADEMARK OFFIC
WASHINGTON, D.C. 2023
www.uspto.go

DAVID A. STENGER
2520 BROFFERTON COURT
SPRINGFIELD, VA 22150

COPY MAILED

NOV 2 5 2002

OFFICE OF PETITIONS

In re Application of
James J. Hickman; Douglas A. Kirkpatrick; David A. Stenger
Application No. 09/880,138
Filed: June 12, 2001
For: BIOSENSOR FOR USE IN TOXICITY ASSESSMENT AND PHARMACOLOGICAL SCREENING

Dear Mr. Stenger:

You are named as a joint inventor in the above identified United States patent application, filed under the provisions of 35 U.S.C. 116 (United States Code), and 37 CFR 1.47(a), Rules of Practice in Patent Cases. Should a patent be granted on the application you will be designated therein as a joint inventor.

As a named inventor you are entitled to inspect any paper in the file wrapper of the application, order copies of all or any part thereof (at a prepaid cost per 37 CFR 1.19) or make your position of record in the application. Alternatively, you may arrange to do any of the preceding through a registered patent attorney or agent presenting written authorization from you. If you care to join in the application, counsel of record (see below) would presumably assist you. Joining in the application would entail the filing of an appropriate oath or declaration by you pursuant to 37 CFR 1.63.

Telephone inquiries regarding this communication should be directed to the Irvin Dingle at (703) 306-5684. Requests for information regarding your application should be directed to the File Information Unit at (703) 308-2733. Information regarding how to pay for and order a copy of the application, or a specific paper in the application, should be directed to Certification Division at (703) 308-9726 or 1 (800) 972-6382 (outside the Washington D.C. area).

Frances Hicks

Frances Hicks
Lead Petitions Examiner
Office of Petitions
Office of the Deputy Commissioner
for Patent Examination Policy

cc:

Edward G. Poplawski
Sidley Austin Brown & Wood LLP
555 West Fifth Street, Suite 4000
Los Angeles, CA 90013-1010

UNITED STATES PATENT AND TRADEMARK OFFICE

COMMISSIONER FOR PATENTS
UNITED STATES PATENT AND TRADEMARK OFFICE
WASHINGTON, D.C. 20231
www.uspto.gov

Paper No. 5

MODIANO & ASSOCIATI
Via Meravigli, 16
Milano 20123 Italy

MAILED

OCT 0 3 2002

Technology Center 2100

In re Application of:
Felice Vinati, et al.
Application No. 09/880,140
Filed: June 14, 2001
For: METHOD AND DEVICE FOR CONTROLLING THE TIME WHICH A USER SPENDS CONNECTED TO A DATA COMMUNICATION NETWORK

DECISION ON REQUEST FOR WITHDRAWAL AS ATTORNEY

This is a decision on the Request To Withdraw from Representation filed August 22, 2002.

A grantable request to withdraw as attorney of record should indicate thereon the present mailing addresses of the attorney(s) who is/are withdrawing from the record and of the applicant. **The request for withdrawal must be signed by every attorney seeking to withdraw or contain a clear indication that one attorney is signing on behalf of another/others**. A request to withdraw will not be approved unless at least 30 (thirty) days would remain between the date of approval and the later of the expiration date of a time to file a response or the expiration date of the maximum time period which can be extended under 37 C.F.R. § 1. 136(a). The effective date of withdrawal being the date of decision and not the date of request. See M.P.E.P. § 402.06. **37 C.F.R. § 1.36 further requires that the applicant or patent owner be notified of the withdrawal of the attorney or agent**.

The request is signed by Guido Modiano alone and does not contain a clear indication that Mr. Modiano is authorized to sign on behalf of the other attorneys of record and is signing on behalf of the other attorneys of record. Furthermore, there is no indication that Applicant has been notified of the request for withdrawal. Accordingly, the request is **DENIED**.

All future communications from the United States Patent and Trademark Office (Office) will continue to be directed to the above-listed address until otherwise notified by applicant. Applicant is reminded of the obligation to promptly notify the Office of any change in correspondence address to ensure receipt of all communications from the Office.

for Vincent N. Trans
Special Programs Examiner
Technology Center 2100
Computer Architecture and Software
(703) 305-9750

UNITED STATES PATENT AND TRADEMARK OFFICE

Commissioner for Patents
United States Patent and Trademark Office
Washington, D.C. 20231
www.uspto.gov

Paper No. 4

Guido Modiano
Via Meravigli 16, 20123 Milan-Italy

MAIL

SEP 1 0 2002

DIRECTOR OFFICE
TECHNOLOGY CENTER 2100

In re Application of:
Sanuele, Vinati et al.
Application No. 09/880,143
Filed: June 14, 2001
For: METHOD FOR MANAGING RENTALS OF REAL ESTATE AND PERSONAL PROPERTY ITEMS OVER A DATA COMMUNICATION NETWORK

DECISION ON REQUEST FOR WITHDRAWAL AS ATTORNEY

This is a decision on the Request To Withdraw from Representation filed August 22, 2002.

A grantable request to withdraw as attorney of record should indicate thereon the present mailing addresses of the attorney(s) who is/are withdrawing from the record and of the applicant. **The request for withdrawal must be signed by every attorney seeking to withdraw or contain a clear indication that one attorney is signing on behalf of another/others**. A request to withdraw will not be approved unless at least 30 (thirty) days would remain between the date of approval and the later of the expiration date of a time to file a response or the expiration date of the maximum time period which can be extended under 37 C.F.R. § 1. 136(a). The effective date of withdrawal being the date of decision and not the date of request. See M.P.E.P. § 402.06. **37 C.F.R. § 1.36 further requires that the applicant or patent owner be notified of the withdrawal of the attorney or agent**.

The request is signed by Guido Modiano alone and does not contain a clear indication that Mr. Modiano is authorized to sign on behalf of the other attorneys of record and is signing on behalf of the other attorneys of record. Furthermore, there is no indication that Applicant has been notified of the request for withdrawal.

Accordingly, the request is **DENIED**.

All future communications from the United States Patent and Trademark Office (Office) will continue to be directed to the above-listed address until otherwise notified by applicant. Applicant is reminded of the obligation to promptly notify the Office of any change in correspondence address to ensure receipt of all communications from the Office.

Vincent N. Trans
Special Programs Examiner
Technology Center 2100
Computer Architecture and Software
(703) 305-9750

UNITED STATES PATENT AND TRADEMARK OFFICE

COMMISSIONER FOR PATENT
UNITED STATES PATENT AND TRADEMARK OFFIC
WASHINGTON, D.C. 20231
www.uspto.go

Paper No.5

Guido Modiano
Via Meravigli 16,
20123 MILAN-ITALY

MAILED

SEP 1 3 2002

Technology Center 2100

In re Application of:
SAMUELE, VINATI et al.
Application No. 09/880,147
Filed: June 14, 2001
For: METHOD FOR CONTROLLING ACCESS TO A DATA COMMUNICATION NETWORK, WITH USER IDENTIFICATION

DECISION ON REQUEST FOR WITHDRAWAL AS ATTORNEY

This is a decision on the Request To Withdraw from Representation filed August 22, 2002.

A grantable request to withdraw as attorney of record should indicate thereon the present mailing addresses of the attorney(s) who is/are withdrawing from the record and of the applicant. **The request for withdrawal must be signed by every attorney seeking to withdraw or contain a clear indication that one attorney is signing on behalf of another/others.** A request to withdraw will not be approved unless at least 30 (thirty) days would remain between the date of approval and the later of the expiration date of a time to file a response or the expiration date of the maximum time period which can be extended under 37 C.F.R. § 1. 136(a). The effective date of withdrawal being the date of decision and not the date of request. See M.P.E.P. § 402.06. **37 C.F.R. § 1.36 further requires that the applicant or patent owner be notified of the withdrawal of the attorney or agent.**

The request is signed by Guido Modiano alone and does not contain a clear indication that Mr. Modiano is authorized to sign on behalf of the other attorneys of record and is signing on behalf of the other attorneys of record. Furthermore, there is no indication that Applicant has been notified of the request for withdrawal.

Accordingly, the request is **DENIED**.

All future communications from the United States Patent and Trademark Office (Office) will continue to be directed to the above-listed address until otherwise notified by applicant. Applicant is reminded of the obligation to promptly notify the Office of any change in correspondence address to ensure receipt of all communications from the Office.

Vincent N. Trans
Special Programs Examiner
Technology Center 2100
Computer Architecture and Software,
(703) 305-9750

UNITED STATES PATENT AND TRADEMARK OFFICE

Commissioner for Patents
United States Patent and Trademark Office
P.O. Box 1450
Alexandria, VA 22313-1450
www.uspto.gov

OSTROLENK FABER GERB & SOFFEN
1180 AVENUE OF THE AMERICAS
NEW YORK NY 10036-8403

COPY MAILED

MAY 2 5 2006

OFFICE OF PETITIONS

In re Application of	:	
Samuele Vinati et al.	:	ON PETITION
Application No. 09/880,147	:	
Filed: June 14, 2001	:	
Attorney Docket No. 34669/GM/ch	:	

This is a decision on the petition filed January 17, 2006, to revive the above-identified application under 37 CFR 1.137(b).

The petition is **GRANTED**.

The above-referenced application was held abandoned on September 15, 2005 for failure to file a proper reply to a Final Office Action mailed June 14, 2005 in compliance with 37 CFR 1.113. A response was filed December 15, 2005 with a three month extension of time but by advisory action mailed December 28, 2005, petitioner was advised that the response did not place the application in condition for allowance. The instant petition and this decision precede the mailing of the Notice of Abandonment.

Comes now petitioners with the instant petition to revive and Notice of Appeal. Additionally, a review of the file reveals that an Appeal Brief was filed April 19, 2006 with a two month extension of time request.

The Notice of Appeal filed January 17, 2006, has been entered and made of record. Although petitioners have submitted the Appeal Brief, the agency is obligated to inform petitioners that they have a two (2)-month period for filing the Appeal Brief, accompanied by the fee required by law, and that the two (2)-month period runs from the date of this decision.

The matter is being referred to Technology Center 2135 for a review of the Notice of Appeal and the Appeal Brief.

Telephone inquiries concerning this matter may be directed to the undersigned Petitions Attorney at (571) 272-3212.

Patricia Faison-Ball

Patricia Faison-Ball
Senior Petitions Attorney
Office of Petitions

UNITED STATES PATENT AND TRADEMARK OFFICE

Commissioner for Patents
United States Patent and Trademark Office
P.O. Box 1450
Alexandria, VA 22313-1450
www.uspto.gov

NIXON & VANDERHYE PC
901 NORTH GLEBE ROAD, 11TH FLOOR
ARLINGTON, VA 22203

COPY MAILED

AUG 22 2005

OFFICE OF PETITIONS

In re Application of	:	
John H. Kenten et al	:	
Application No. 09/880,149	:	DECISION GRANTING PETITION
Filed: June 14, 2001	:	UNDER 37 CFR 1.313(c)(2)
Attorney Docket No. 2757-5	:	

This is a decision on the petition, filed August 19, 2005, under 37 CFR 1.313(c)(2) to withdraw the above-identified application from issue after payment of the issue fee.

The petition is **GRANTED**.

The above-identified application is withdrawn from issue for consideration of a submission under 37 CFR 1.114 (request for continued examination). See 37 CFR 1.313(c)(2).

Petitioner is advised that the issue fee paid on July 28, 2005 in the above-identified application cannot be refunded. If, however, the above-identified application is again allowed, petitioner may request that it be applied towards the issue fee required by the new Notice of Allowance.[1]

Telephone inquiries should be directed to the undersigned at (571) 272-3218.

This matter is being referred to Technology Center AU 1648 for processing of the request for continued examination under 37 CFR 1.114 and for consideration of the Information Disclosure Statement.

Frances Hicks
Petitions Examiner
Office of Petitions

---

[1] *The request to apply the issue fee to the new Notice may be satisfied by completing and returning the new Issue Fee Transmittal Form PTOL-85(b), which includes the following language thereon: "Commissioner for Patents is requested to apply the Issue Fee and Publication Fee (if any) or re-apply any previously paid issue fee to the application identified above." Petitioner is advised that, whether a fee is indicated as being due or not, the Issue Fee Transmittal Form* ***must*** *be completed and timely submitted to avoid abandonment. Note the language in bold text on the first page of the Notice of Allowance and Fee(s) Due (PTOL-85).*

UNITED STATES PATENT AND TRADEMARK OFFICE

Commissioner for Patents
United States Patent and Trademark Office
P.O. Box 1450
Alexandria, VA 22313-1450
www.uspto.gov

DECHERT LLP
P.O. BOX 10004
PALO ALTO CA 94303

COPY MAILED

FEB 1 6 2005

OFFICE OF PETITIONS

In re Application of
Nayyar
Application No. 09/880,169
Filed: June 13, 2001
Attorney Docket No. 372447-00101
For: MULTIMEDIA COMPRESSION/ DECOMPRESSION AND COMPRESSED DATA REPRESENTATION

: DECISION DISMISSING PETITION

This is a decision on the petition, filed August 30, 2004 (certificate of mailing date August 25, 2004), under 37 CFR 1.183 requesting waiver of an extension of time fee paid under 37 CFR 1.136(a).

Pursuant to petitioner's authorization, deposit account no. 50-2778 will be charged the required $130.00 petition fee owed.

The petition under 37 CFR 1.183 is **DISMISSED**.

Any request for reconsideration of this decision must be submitted within TWO (2) MONTHS from the mail date of this decision. Extensions of time under 37 CFR 1.136(a) are permitted. Any response should be entitled "Request for Reconsideration of Petition Under 37 CFR 1.183 to waive 37 CFR 1.136(a)."

Petitioner states that the Examiner made an error in enumerating the claims of invention group II in the Office action dated June 25, 2004. The Office action set a 1 month extendable period for reply. Petitioner allegedly contacted the Examiner a number of times after receiving the flawed Office action and requested that the Examiner correct the error and mail a new Office action with a new period for response. The error in the June 25, 2004 Office action is obvious because the Examiner grouped claims 1-10 and 27-28 and there were only claims 1-14 in the application. The Examiner did not correct this error and did not set a new period for response. Petitioner filed an election and a 1 month extension of time and required fee on August 30, 2004 (certificate of mailing date August 25, 2004.

The June 25, 2004 set an extendable one month period for reply. Petitioner waited for another Office action instead of responding in writing to the June 25, 2004 Office action prior to July 25, 2004. Petitioner could have taken action within the one month period for reply and avoided having to pay an extension of time fee to continue prosecution. The extension of time fee was properly owed when paid.

Petitioner is advised that the statutory basis for 37 CFR 1.136(a) is 35 U.S.C. 41(a)(8)(A). 35 U.S.C. 41(a)(8)(A) states in pertinent part, "...The Director shall charge the following fees:... [f]or petitions for 1-month extensions of time to take actions required by the Director in an application... on filing a first petition...." The word "shall" appears in 35 USC 41(a)(8)(A). It is well settled that the use of "shall" in a statute is the language of command, and where the directions of a statute are mandatory, then strict compliance with the statutory terms is essential. Farrel Corp. V. U.S. Int'l Trade Comm'n, 942 F.2d 1147, 20 USPQ2d 1912 (Fed. Cir. 1991). The Office has no discretion in this situation.

The application is being returned to Technology Center G.A.U. 2621 to await reply to the December 28, 2004 non-final Office action.

Telephone inquiries pertaining to this decision may be directed to the undersigned at (571) 272-3230.

E Shirene Willis

E. Shirene Willis
Senior Petitions Attorney
Office of Petitions
Office of the Deputy Commissioner
for Patent Examination Policy

UNITED STATES PATENT AND TRADEMARK OFFICE

COMMISSIONER FOR PATENTS
UNITED STATES PATENT AND TRADEMARK OFFICE
P.O. BOX 1450
ALEXANDRIA, VA 22313-1450
www.uspto.gov

Paper No. 6

Michael V. Drew
The Mead Corporation
4850D North Church Lane
Smyrna GA 30080

COPY MAILED

AUG 1 9 2003

OFFICE OF PETITIONS

In re Application of
Will L. Culpepper
Application No. 09/880,198
Filed: June 13, 2001
Attorney Docket No. D-3081

ON PETITION

This is a decision on the petition under 37 CFR 1.137(b), filed August 5, 2003, to revive the above-identified application.

The petition is GRANTED.

The above-identified application became abandoned for failure to reply in a timely manner to the non-final Office action mailed October 21, 2002, which set a shortened statutory period for reply of three(3) months. No extensions of time under the provisions of 37 CFR 1.136(a) were obtained. Accordingly, the above-identified application became abandoned on January 22, 2003.

37 CFR 1.137(b)(3) requires a statement that the entire delay in filing the required reply from the due date for the reply until the filing of a grantable petition pursuant to 37 CFR 1.137(b) was unintentional. If the statement contained in the instant petition varies from the language required by 37 CFR 1.137(b)(3), the statement contained in the instant petition is being construed as the statement required by 37 CFR 1.137(b)(3) and petitioner must notify the Office if this is **not** a correct interpretation of the statement contained in the instant petition.

It is not apparent whether the person signing the statement of unintentional delay was in a position to have firsthand or direct knowledge of the facts and circumstances of the delay at issue. Nevertheless, such statement is being treated as having been made as the result of a reasonable inquiry into the facts and circumstances of such delay. See 37 CFR 10.18(b) and Changes to Patent Practice and Procedure; Final Rule Notice, 62 Fed. Reg. 53131, 53178 (October 10, 1997), 1203 Off. Gaz. Pat. Office 63, 103 (October 21, 1997). In the event that such an inquiry has not been made, petitioner must make such an inquiry. If such inquiry results in the discovery that it is not correct that the entire delay in filing the

required reply from the due date for the reply until the filing of a grantable petition pursuant to 37 CFR 1.137(b) was unintentional, petitioner must notify the Office.

There is no indication that the person signing the instant petition was ever given a power of attorney or authorization of agent to prosecute the above-identified application. If the person signing the instant petition desires to receive future correspondence regarding this application, the appropriate power of attorney or authorization of agent must be submitted. While a courtesy copy of this decision is being mailed to the person signing the instant petition, all future correspondence will be directed to the address currently of record until such time as appropriate instructions are received to the contrary.

Telephone inquiries concerning this decision should be directed to Cheryl Gibson-Baylor at (703)308-5111, or in her absence, Frances Hicks at (703)305-8680.

The application file is being forwarded to Technology Center 3700, Art Unit 3721.

Cheryl Gibson-Baylor
Petitions Examiner
Office of Petitions
Office of the Deputy Commissioner
for Patent Examination Policy

Frances Hicks
Petitions Examiner

cc: Wm. Brook Lafferty
Troutman Sanders LLP
600 Peachtree Street, NE
Suite 5200
Atlanta, Georgia 30308-2216

UNITED STATES PATENT AND TRADEMARK OFFICE

Commissioner for Patents
United States Patent and Trademark Office
Washington, D.C. 20231
www.uspto.gov

Paper No. 6

BRIAN D. OGONOWSKY
SKJERVEN, MORRILL, MACPHERSON, FRANKLIN
SUITE 700
25 METRO DRIVE
SAN JOSE, CA 95110

COPY MAILED

NOV 1 5 2001

OFFICE OF PETITIONS

In re Application of	:	
Camras et al.	:	DECISION DISMISSING
Application No. 09/380,204	:	PETITION
Filed: 12 June, 2001	:	
Attorney Docket No. M-8633-1P US	:	

This is a decision on the petition under 37 CFR 1.53(e) filed 17 September, 2001, which is being treated as a petition requesting that the above-identified application, including Figure 11, be accorded a filing date of 12 June, 2001.

Applicants filed the above-identified application on 12 June, 2001. However, on 10 August, 2001, the Office of Initial Patent Examination mailed a "Notice to File Missing Parts of Nonprovisional Application," stating that the application had been accorded a filing date of 12 June, 2001, and advising applicant that, *inter alia*, Figure 11 described in the specification appeared to have been omitted.

In response, on 17 September, 2001, applicants filed a petition under 37 CFR 1.53(e) with a $130.00 petition fee, and a copy of Figure 11. Petitioners assert that Figure 11 was among the application papers deposited in the USPTO on 12 June, 2001. Petitioners also state that the present application as filed incorporated by reference the entire disclosure of prior Application No. 09/660,317, of which this application is a continuation-in-part (CIP).

A review of the record reveals that 12 sheets of drawings containing Figures 1A-D, and 2-10 were received in the USPTO on 12 June, 2001. Figure 11, however, is not located among the application papers received on 12 June, 2001. Accordingly, the "Notice to File Missing Parts" mailed 10 August, 2001, was

correct in stating that Figure 11 described in the specification had been omitted.

Accordingly, the petition is dismissed.

The $130.00 petition fee will not be refunded because the present petition was not necessitated by any error on the part of the United States Patent and Trademark Office.

The Office notes that Page 1 of the specification of the present application states:

> This application is a Continuation-In-Part of U.S. Patent Application Serial No. 09/660317 *(sic)* filed on September 12, 2000, which is herein incorporated by reference in its entirety.

Section 201.06(c) of the Manual of Patent Examining Procedure states that:

> . . . an applicant may incorporate by reference the prior application by including, in the application-as-filed, a statement that such specifically enumerated prior application or applications are "hereby incorporated herein by reference." The statement may appear in the specification or in the application transmittal letter. The inclusion of this incorporation by reference of the prior application(s) will permit an applicant to amend the continuing application to include any subject matter in such prior application(s), without the need for a petition. (emphasis supplied)

Obviously, in view of the incorporation by reference of the prior application, the drawing of Figure 11 is not new matter if it was a part of the disclosure of the prior application.

The application is being returned to the Office of Initial Patent Examination for further processing with a filing date of 12 June, 2001, including an indication in Office records that 12 sheets of drawings containing Figures 1A-D and 2-11 were present on filing.

Thereafter, the application will be forwarded to Technology Center 2800 for consideration by the examiner of the petition filed 17 September, 2001, as an amendment requesting the entry of a new sheet of drawings.

Any inquiries related to this decision should be directed to Petitions Attorney Douglas I. Wood at (703) 308-6918.

Beverly M. Flanagan
Supervisory Petitions Examiner
Office of Petitions
Office of the Deputy Commissioner
for Patent Examination Policy

UNITED STATES PATENT AND TRADEMARK OFFICE

COMMISSIONER FOR PATENTS
UNITED STATES PATENT AND TRADEMARK OFFICE
P.O. BOX 1450
ALEXANDRIA, VA 22313-1450
www.uspto.gov

Paper No. 11

Datascope Corp.
14 Philips Parkway
Montvale, NJ 07645

COPY MAILED

DEC 2 9 2003

OFFICE OF PETITIONS

In re Application of Boris Leschinsky Application No. 09/880,241 Filed: June 13, 2001 Attorney Docket No. DATA 10 CON CIP	DECISION ON PETITION

This is a decision on the "Petition for Revival of an Application for Patent Abandoned Unavoidably under 37 CFR 1.137(a)," filed October 24, 2003, which is properly considered as a petition to withdraw the holding of abandonment pursuant to §1.8(b)[1]. This petition was recently forwarded to the undersigned for consideration.

The petition under § 1.181 is **GRANTED**.

The above-identified application became abandoned for failure to file a timely and proper reply to the non-final Office action mailed February 26, 2003. This Office action set a shortened statutory period for reply of three (3) months from the mailing date of the action, with extensions of time obtainable pursuant to 37 CFR 1.136(a). No reply having been received and no extension of time made of record, the above-identified application became abandoned effective May 27, 2003. A Notice of Abandonment was mailed on September 24, 2003.

Petitioner filed the instant petition (and petition fee under § 1.137(a)), asserting that the response, including a petition for extension of time, was timely filed. In support thereof, petitioner submitted copies of the response and petition for extension of time as petitioner maintains they were timely filed.

---

[1] (b) In the event that correspondence is considered timely filed by being mailed or transmitted in accordance with paragraph (a) of this section, but not received in the Patent and Trademark Office, and the application is held to be abandoned ..., the correspondence will be considered timely if the party who forwarded such correspondence:

(1) Informs the Office of the previous mailing or transmission of the correspondence promptly after becoming aware that the Office has no evidence of receipt of the correspondence;

(2) Supplies an additional copy of the previously mailed or transmitted correspondence and certificate; and

(3) Includes a statement which attests on a personal knowledge basis or to the satisfaction of the Commissioner to the previous timely mailing or transmission.

Petitioner's evidence has been considered, and it has been determined that withdrawal of the holding of abandonment pursuant to § 1.8(b) is warranted. Petitioner's evidence shows that the correspondence was timely filed pursuant to § 1.8(a). The instant petition was promptly filed. Both the response and the petition for extension of time bear a proper certificate of mailing under 37 CFR 1.8(a), executed by patent attorney J. Gary Mohr and certifying timely mailing on August 25, 2003. On petition, attorney Mohr attests to the previous timely mailing. Furthermore, a review of Office finance records reveals that as of August 2003, the authorized Deposit Account had sufficient funds to pay the extension of time fee had the fee been presented.

In view thereof, the response is considered timely filed, the Notice of Abandonment is **VACATED** and the holding of abandonment is hereby **WITHDRAWN**.

Since consideration of the petition under § 1.137(a) is unnecessary for the reasons cited, the petition fee is subject to refund.

However, the fee for the extension of time, at the rate in effect on August 25, 2003, is due. Accordingly, the $110 petition fee is being transferred to pay the extension fee. To complete payment of the extension fee, $820 is being charged to Deposit Account No. 04-0170, as authorized.

The application file is being forwarded to Technology Center 3763 for consideration of the amendment resubmitted October 24, 2003.

Telephone inquiries concerning this decision should be directed to the undersigned at (703) 305-0309.

Nancy Johnson
Senior Petitions Attorney
Office of Petitions

UNITED STATES PATENT AND TRADEMARK OFFICE

Commissioner for Patents
United States Patent and Trademark Office
P.O. Box 1450
Alexandria, VA 22313-1450
www.uspto.gov

PHILIP S. JOHNSON
JOHNSON & JOHNSON
ONE JOHNSON & JOHNSON PLAZA
NEW BRUNSWICK, NJ 08933

COPY MAILED

JUN 2 1 2004

OFFICE OF PETITIONS

In re Application of :
Jane Sheetz et al :
Application No. 09/880,258 : ON PETITION 17
Filed: June 13, 2001 :
Attorney Docket No. 13977 (IND-039)

This is a decision on the petition, filed June 18, 2004, under 37 CFR 1.313(c)(2) to withdraw the above-identified application from issue after payment of the issue fee.

The petition is **GRANTED**.

The above-identified application is withdrawn from issue for consideration of a submission under 37 CFR 1.114 (request for continued examination). See 37 CFR 1.313(c)(2).

Petitioner is advised that the issue fee paid on May 24, 2004 in the above-identified application cannot be refunded. If, however, the above-identified application is again allowed, petitioner may request that it be applied towards the issue fee required by the new Notice of Allowance.[1]

Telephone inquiries should be directed to Irvin Dingle at (703) 306-5684.

The file will be forwarded to Technology Center AU 3728 for processing of the request for continued examination under 37 CFR 1.114 and for consideration of the concurrently filed Information Disclosure Statement.

Irvin Dingle
Petitions Examiner
Office of Petitions
Office of the Deputy Commissioner
for Patent Examination Policy

---

[1] The request to apply the issue fee to the new Notice may be satisfied by completing and returning the new Issue Fee Transmittal Form PTOL-85(b), which includes the following language thereon: Commissioner for Patents is requested to apply the Issue Fee and Publication Fee (if any) or re-apply any previously paid issue fee to the application identified above. Petitioner is advised that, whether a fee is indicated as being due or not, the Issue Fee Transmittal Form **must** be completed and timely submitted to avoid abandonment. Note the language in bold text on the first page of the Notice of Allowance and Fee(s) Due (PTOL-85).

UNITED STATES PATENT AND TRADEMARK OFFICE

COMMISSIONER FOR PATENTS
UNITED STATES PATENT AND TRADEMARK OFFICE
P.O. BOX 1450
ALEXANDRIA, VA 22313-1450
www.uspto.gov

Paper No. 7

Thomas A. Turano
TESTA, HURWITZ, & THIBEAULT, LLP
High Street Tower
125 High Street
Boston, MA 02110

MAIL

MAR 1 7 2004

DIRECTOR OFFICE
TECHNOLOGY CENTER 2100

In re Application of:
Pope et al.
Application No. 09/880,268
Filed: June 13, 2001
For: METHOD AND APPARATUS FOR TRANSMITTING AUTHENTICATION CREDENTIALS OF A USER ACROSS COMMUNICATIOIN SESSIONS

DECISION ON REQUEST TO WITHDRAW AS ATTORNEY OR AGENT

This is a decision on the Request To Withdraw from Representation filed February 27, 2004.

A grantable request to withdraw as attorney of record should indicate thereon the present mailing addresses of the attorney(s) who is/are withdrawing from the record and of the applicant. The request for withdrawal must be signed by every attorney seeking to withdraw or contain a clear indication that one attorney is signing on behalf of another/others. A request to withdraw will not be approved unless at least 30 (thirty) days would remain between the date of approval and the later of the expiration date of a time to file a response or the expiration date of the maximum time period which can be extended under 37 C.F.R. § 1. 136(a). The effective date of withdrawal being the date of decision and not the date of request. See M.P.E.P. § 402.06. 37 C.F.R. § 1.36 further requires that the applicant or patent owner be notified of the withdrawal of the attorney or agent.

The request filed February 27, 2004 meets all the requirements. Accordingly the request is **GRANTED**.

All future communications from the Office will be directed to the below-listed address until otherwise notified by applicant. This correspondence address is provided by the withdrawn attorney(s). Applicant is reminded of the obligation to promptly notify the Patent and Trademark Office (Office) of any change in correspondence address to ensure receipt of all communications from the Office.

for James R. Matthews

Vincent N. Trans
Special Program Examiner
Technology Center 2100
Computer Architecture, Software, and
Information Security
703-305-9750

cc: John D. Lanza, Esq.
LAHIVE & COCKFIELD, LLP
28 State Street, 24th Floor
Boston, MA 02109-1784

UNITED STATES PATENT AND TRADEMARK OFFICE

OIPE DEC 10 2002 JC96 PATENT & TRADEMARK OFFICE

COMMISSIONER FOR PATENTS
UNITED STATES PATENT AND TRADEMARK OFFICE
WASHINGTON, D.C. 20231
www.uspto.gov

COPY MAILED

JUN 10 2002

OFFICE OF PETITIONS

HOWREY SIMON ARNOLD & WHITE LLP
750 BERING DRIVE
HOUSTON, TX 77057

In re Application of
K. Gifford Goodhue, Jr., et al.
Application No. 09/880,409
Filed: June 13, 2001
Attorney Docket No.
11084.0015.CPUS00GOOD015

: DECISION REFUSING STATUS
: UNDER 37 CFR 1.47(a)

RECEIVED

DEC 13 2002

OFFICE OF PETITIONS

This is in response to the petition under 37 CFR 1.47(b), filed February 8, 2002, which has been treated as a petition under 37 CFR 1.47(a).[1]

The petition is dismissed.

Rule 47 applicant is given TWO MONTHS from the mailing date of this decision to respond, correcting the below-noted deficiencies. Any response should be entitled "Request for Reconsideration of Petition Under 37 CFR 1.47(a). and may include an oath or declaration executed by the inventor. **Failure to respond will result in abandonment of the application**. Any extensions of time will be governed by 37 CFR 1.136(a).

The above-identified application was filed on June 13, 2001, without an executed oath or declaration and naming K. Gifford Goodhue, Jr., Max M. Holmes, Clinton Scott Norman and John M. Wilkerson, III.

Accordingly, on July 9, 2001, a "Notice To File Missing Parts of Application" was mailed, requiring an executed oath or declaration, and a surcharge for their late filing. A two month period for reply was set.

In response, on February 8, 2002, the instant petition and authorization to charge counsel's credit card in the amount of $2,250 for the surcharge, the petition fee and a five month extension of time fee[2], statements in support of a petition under 37 CFR 1.47 (b) by K. Gifford Goodhue, Jr. and Robert Jennejahn, accompanied by the last known address of Max M. Holmes.

---

[1]A petition under 37 CFR 1.47(b) is inappropriate in this instance since all but one of the inventors has signed the declaration. A petition under 37 CFR 1.47(b) is only appropriate where none of the inventors will sign, accordingly the petition will be treated as a petition under 37 CFR 1.47(a).

[2]Petitioner's deposit account no. 01-2508 will be credited in the amount of $30.00. ($1960 extension of time fee, $130 surcharge, $130 37 CFR 1.47 petition fee)

A grantable petition under 37 CFR 1.47(a) requires: (1) proof that the non-signing inventor cannot be reached or refuses to sign the oath or declaration after having been presented with the application papers (specification, claims and drawings); (2) an acceptable oath or declaration in compliance with 35 U.S.C. §§ 115 and 116; (3) the petition fee; and (4) a statement of the last known address of the non-signing inventor. Applicant lacks items (1) set forth above.

As to item (1), applicant appears to demonstrate that a package containing a declaration and an assignment was mailed to Mr. Holmes by certified mail. The evidence further points to the fact that the package was mailed to but not accepted by Mr. Holmes as is shown by the package being returned by the united states postal service.

The package was sent to the last known address but Mr. Holmes refused acceptance of the package, which is tantamount to a refusal to sign the oath or declaration. However, unless Mr. Holmes was presented with a copy of the application papers (specification, claims and drawings), Mr. Holmes could not attest that he has "reviewed and understands the application papers" and therefore could not sign the declaration which he was given. Accordingly, Rule 47 applicant failed to show or provide proof that the inventor has refused to sign the declaration. Did the inventor receive the application papers? See Manual of Patent Examining Procedure, Section 409.03(d). Petitioner should show that a copy of the application papers was presented to the inventor, but that he did not respond to the request that he sign the oath/declaration in order to show that the inventor has refused to join in the application. The proof of the pertinent events should be made by a statement of someone with first hand knowledge of the events.

Further correspondence with respect to this matter should be addressed as follows:

By mail: Assistant Commissioner for Patents
Box DAC
Washington, D.C. 20231

By FAX: (703) 308-6916
Attn: Office of Petitions

By hand: Crystal Plaza Four, Suite 3C23
2201 S. Clark Place
Arlington, VA

Telephone inquiries concerning this matter may be directed to the undersigned Petitions Attorney at (703)305-4497.

Patricia Faison-Ball

Patricia Faison-Ball
Senior Petitions Attorney
Office of Petitions
Office of the Deputy Commissioner
for Patent Examination Policy

UNITED STATES PATENT AND TRADEMARK OFFICE

COMMISSIONER FOR PATENTS
UNITED STATES PATENT AND TRADEMARK OFFICE
WASHINGTON, D.C. 20231
www.uspto.gov

Paper No. 11

COPY MAILED

FEB 10 2003

OFFICE OF PETITIONS

HOWREY SIMON ARNOLD & WHITE LLP
750 BERING DRIVE
HOUSTON, TX 77057

In re Application of
K. Gifford Goodhue, Jr., et al.
Application No. 09/880,409
Filed: June 13, 2001
Attorney Docket No.
11084.0015.CPUS00GOOD015

: DECISION REFUSING STATUS
: UNDER 37 CFR 1.47(a)

This is in response to the request for reconsideration and request for a four month extension of time, filed December 10, 2002.

The petition is **GRANTED**.

Petitioner has shown that the non-signing inventor Max M. Holmes has refused to join in the filing of the above-identified application. Specifically, the declarations of Carter J. White, Attorney of Record, indicates that the application papers for the above identified patent application was mailed to Mr. Holmes at the last known address and that Michael E. Alexander, counsel for Mr. Holmes, acknowledges receipt of the papers by Mr. Holmes. Further, the declaration of Mr. White indicates that by his actions, Mr. Holmes has refused to execute the declaration.

The declaration has been properly executed by joint inventors K. Gifford Goodhue, Jr., Clinton Scott Norman and John M. Wilkerson, III.

The above-identified application and papers have been reviewed and found in compliance with 37 CFR 1.47(a). In view thereof, this application is hereby accorded Rule 1.47(a) status.

It should be noted that the evidence presented of Mr. Holmes' refusal to execute the oath/declaration in this application indicates that there may be an issue regarding whether or not Mr. Holmes contributed towards any of the subject matter claimed in this application. If that is the case, the parties are advised to review 37 CFR 1.48 regarding filing a petition to correct inventorship.

Further, as was noted in the letter dated June 10, 2002 from the USPTO, dismissing the petition filed February 8, 2002 under 37 CFR 1.47 (b), a petition under 37 CFR 1.47(b) is inappropriate in this instance since all but one of the inventors has signed the declaration. A petition under 37 CFR 1.47(b) is only appropriate where none of the inventors will sign.

Thus, as provided in Rule 1.47(c), this Office will forward notice of this application's filing to the non-signing inventors at the address given in the petition. Notice of the filing of this application will also be published in the Official Gazette.

The application is being forwarded to the Office of Initial Patent Examination to be processed in due course.

Telephone inquiries related to this decision should be directed to the undersigned Petitions Attorney at (703) 305-4497.

Patricia Faison-Ball

Patricia Faison-Ball
Senior Petitions Attorney
Office of Petitions

UNITED STATES PATENT AND TRADEMARK OFFICE

COMMISSIONER FOR PATENTS
UNITED STATES PATENT AND TRADEMARK OFFICE
WASHINGTON, D.C. 20231
www.uspto.gov

Paper No. 12

MAX M. HOLMES
31334 BEARING STAR LANE
TOMBALL, TX 77375

COPY MAILED

FEB 10 2003

OFFICE OF PETITIONS

In re Application of
K. Gifford Goodhue, Jr., et al.
Application No. 09/880,409
Filed: June 13, 2001
For: COMPOSITION AND METHOD FOR DUAL FUNCTION SOIL GROUTING EXCAVATING OR BORING FLUID

Dear Mr. Holmes:

You are named as a joint inventor in the above identified United States patent application, filed under the provisions of 35 U.S.C. 116 (United States Code), and 37 CFR 1.47(a), Rules of Practice in Patent Cases. Should a patent be granted on the application you will be designated therein as a joint inventor.

As a named inventor you are entitled to inspect any paper in the file wrapper of the application, order copies of all or any part thereof (at a prepaid cost per 37 CFR 1.19) or make your position of record in the application. Alternatively, you may arrange to do any of the preceding through a registered patent attorney or agent presenting written authorization from you. If you care to join the application, counsel of record (see below) would presumably assist you. Joining in the application would entail the filing of an appropriate oath or declaration by you pursuant to 37 CFR 1.63.

Telephone inquiries regarding this communication should be directed to the undersigned Petitions Attorney at (703) 305-4497. Requests for information regarding your application should be directed to the File Information Unit at 703/308-2733. Information regarding how to pay for and order a copy of the application, or a specific paper in the application, should be directed to Certification Division at 703/308-9726 or 1-800-972-6382 (outside the Washington D.C. area).

Patricia Faison-Ball

Patricia Faison-Ball
Senior Petitions Attorney
Office of Petitions

cc:
HOWREY SIMON ARNOLD & WHITE LLP
750 BERING DRIVE
HOUSTON TX 77057

UNITED STATES PATENT AND TRADEMARK OFFICE

COMMISSIONER FOR PATE
UNITED STATES PATENT AND TRADEMARK OFF
WASHINGTON, D.C. 202
www.uspto

MAILED

MAY 2 8 2002

DIRECTOR'S OFFICE
TECHNOLOGY CENTER 3600

Paper No. 7

John S. Pratt, Esquire
Kilpatrick Stockton, LLP
1100 Peachtree Street
Suite 2800
Atlanta, Georgia 30309

In re Application of: Robert Pliha	)	
Application No. 09/880,430	)	
Filed: June 14, 2001	)	
For: SYSTEMS AND METHODS FOR DISTRIBUTING TARGETED INCENTIVES TO FINANCIAL INSTITUTION CUSTOMERS	)	**DECISION ON REQUEST FOR WITHDRAWAL AS ATTORNEY**

This is a decision on the Request To Withdraw from Representation filed October 31, 2001 and the subsequent Petition to Rescind the Request To Withdraw from Representation filed December 17, 2001.

A grantable request to withdraw as attorney of record should indicate thereon the present mailing addresses of the attorney(s) who is/are withdrawing from the record and of the applicant. The request for withdrawal must be signed by every attorney seeking to withdraw or contain a clear indication that one attorney is signing on behalf of another/others. A request to withdraw will not be approved unless at least 30 (thirty) days would remain between the date of approval and the later of the expiration date of a time to file a response or the expiration date of the maximum time period which can be extended under 37 C.F.R. § 1. 136(a). The effective date of withdrawal being the date of decision and not the date of request. See M.P.E.P. § 402.06. 37 C.F.R. § 1.36 further requires that the applicant or patent owner be notified of the withdrawal of the attorney or agent.

The effective date of a withdrawal is the date of decision. In light of the rescission of the request ***prior to any decision being rendered*** the request to withdraw is **DISMISSED** as **MOOT**.

All future communications from the Office will continue to be directed to the above-listed address until otherwise notified by applicant. Applicant is reminded of the obligation to promptly notify the Patent and Trademark Office (Office) of any change in correspondence address to ensure receipt of all communications from the Office.

Pinchus M. Laufer
Special Programs Examiner
Technology Center 2100
Computer Architecture, Software, and Electronic Commerce
(703) 306-4160

UNITED STATES PATENT AND TRADEMARK OFFICE

Commissioner for Patents
United States Patent and Trademark Office
P.O. Box 1450
Alexandria, VA 22313-1450
www.uspto.gov

Winston & Strawn
200 Park Avenue
New York, New York 10166

COPY MAILED

DEC 30 2004

OFFICE OF PETITIONS

In re Application of
Martinez et al.
Application No. 09/880/498
Filed: June 13, 2001
Attorney Docket No. 87264-100

DECISION GRANTING PETITION

This decision is in response to Applicants response to applicants' "Petition for Patent Term Adjustment Under 37 CFR 1.705(b)" filed on Aril 9, 2004 requesting that the patent term adjustment determination at the time of the mailing of the notice of allowance be adjusted from seventy-three (73) days to two hundred and ten days.

Applicants petition is **GRANTED**.

The Office will adjust the PTA calculation reflected in the PAIR screen to accurately reflect a determination of two hundred and ten (210) a the time of the mailing of the notice of allowance. This determination made change (either greater or less) depending on specific events occurring after the mailing of the notice of allowance.

Applicants argue that the applicants did not fail to reply to any sequence requirement within three months of the mailing of such notice by the Office. Applicant argue that pursuant to 37 CFR 1.704(b) applicants have three months to reply to a notice from the Office regardless of the shortened statutory period set by the Office.

Applicants arguments are persuasive. The record reflects that the applicants replied to every notice mailed by the Office within three (3) months and accordingly should not have been considered a PTA reduction. Accordingly, the record should reflect that the Office failed to mail a first notice pursuant to 35 U.S.C. 132 within fourteen months of the filing date of the application, by two hundred and ten (210) days. See 37 CFR 1.702(a)(1). The record should further reflect that applicants did not fail to engage in any reasonable efforts to conclude prosecution of the application and accordingly two hundred and ten (210) days is the correct determination.

The Office notes the delay in deciding this petition and notes that the applicants will receive additional PTA due to the Office's failure to issue the application within four months of the payment of the issue fee. This additional PTA will be added at the time of the issuance of the issue notification letter and will be reflected in the issue notification letter.

The Office has assessed the $200.00 fee for this petition. No additional fees are required .

Application No. 09/880/498

The application will be forwarded to the Office of Patent Publication for a prompt issuance of such application.

Any questions concerning this decision should be directed to Kery A. Fries, Senior Legal Advisor, at 571-272-7757.

Kery A Fries
for

Karin Ferriter
Senior Legal Advisor
Office of Deputy Commissioner
For Patent Examination Policy

Encl. Adjusted Pair Calculation

JEJ

UNITED STATES PATENT AND TRADEMARK OFFICE

Commissioner for Patents
United States Patent and Trademark Office
P.O. Box 1450
Alexandria, VA 22313-1450
www.uspto.gov

OIPE JC105
FEB 1 8 2005
PATENT & TRADEMARK OFFICE

RECEIVED
DEC 0 9 2004
Christie, Parker & Hale, LLP

CHRISTIE, PARKER & HALE
PO BOX 7068
PASADENA CA 91109-7068

Paper No.
COPY MAILED
DEC 0 3 2004
OFFICE OF PETITIONS

In re Application of :
Theodore Mayer et al :
Application No. 09/880,516 : ON PETITION
Filed: June 12, 2001 :
Attorney Docket No. 45291/JEJ/P523 :

This is a decision on the petition, filed November 30, 2004, under 37 CFR 1.313(c)(2) to withdraw the above-identified application from issue after payment of the issue fee.

The petition is **GRANTED.**

The above-identified application is withdrawn from issue for consideration of a submission under 37 CFR 1.114 (request for continued examination). See 37 CFR 1.313(c)(2).

Petitioner is advised that the issue fee paid on September 20, 2004 in the above-identified application cannot be refunded. If, however, the above-identified application is again allowed, petitioner may request that it be applied towards the issue fee required by the new Notice of Allowance.[1]

Telephone inquiries should be directed to the undersigned at (703) 305-8859.

After receipt of the file in the Office of Petitions, the application will be forwarded to Technology Center AU 2674 for processing of the request for continued examination under 37 CFR 1.114.

Karen Creasy

Karen Creasy
Petitions Examiner
Office of Petitions
Office of the Deputy Commissioner
for Patent Examination Policy

CASE # 45291 ACTION
REMINDER DUE DATE
DEADLINE

[1] The request to apply the issue fee to the new Notice may be satisfied by completing and returning the new Issue Fee Transmittal Form PTOL-85(b), which includes the following language thereon: "Commissioner for Patents is requested to apply the Issue Fee and Publication Fee (if any) or re-apply any previously paid issue fee to the application identified above." Petitioner is advised that, whether a fee is indicated as being due or not, the Issue Fee Transmittal Form **must** be completed and timely submitted to avoid abandonment. Note the language in bold text on the first page of the Notice of Allowance and Fee(s) Due (PTOL-85).

UNITED STATES PATENT AND TRADEMARK OFFICE

Commissioner for Patents
United States Patent and Trademark Office
P.O. Box 1450
Alexandria, VA 22313-1450
www.uspto.gov

CHRISTIE, PARKER & HALE, LLP
P.O. BOX 7068
PASADENA CA 91109-7068

COPY MAILED

MAY 0 5 2005

OFFICE OF PETITIONS

In re Application of	:	
Theodore Mayer et al	:	
Application No. 09/880,516	:	ON PETITION
Filed: June 12, 2001	:	
Attorney Docket No. 45291/JEJ/P523	:	

This is a decision on the petition, filed May 3, 2005, under 37 CFR 1.313(c)(2) to withdraw the above-identified application from issue after payment of the issue fee.

The petition is **GRANTED**.

The above-identified application is withdrawn from issue for consideration of a submission under 37 CFR 1.114 (request for continued examination). See 37 CFR 1.313(c)(2).

Petitioner is advised that the issue fee paid on February 18, 2005 in the above-identified application cannot be refunded. If, however, the above-identified application is again allowed, petitioner may request that it be applied towards the issue fee required by the new Notice of Allowance.[1]

Telephone inquiries should be directed to the undersigned at (571) 272-3208.

The examiner of Technology Center AU 2674 will consider the request for continued examination under 37 CFR 1.114.

Karen Creasy

Karen Creasy
Petitions Examiner
Office of Petitions
Office of the Deputy Commissioner
for Patent Examination Policy

---

[1] The request to apply the issue fee to the new Notice may be satisfied by completing and returning the new Issue Fee Transmittal Form PTOL-85(b), which includes the following language thereon: "Commissioner for Patents is requested to apply the Issue Fee and Publication Fee (if any) or re-apply any previously paid issue fee to the application identified above." Petitioner is advised that, whether a fee is indicated as being due or not, the Issue Fee Transmittal Form **must** be completed and timely submitted to avoid abandonment. Note the language in bold text on the first page of the Notice of Allowance and Fee(s) Due (PTOL-85).

#15

UNITED STATES PATENT AND TRADEMARK OFFICE

Commissioner for Patents
United States Patent and Trademark Office
P.O. Box 1450
Alexandria, VA 22313-1450
www.uspto.gov

Paper No.
COPY MAILED

DEC 0 3 2004

OFFICE OF PETITIONS

CHRISTIE, PARKER & HALE
PO BOX 7068
PASADENA CA 91109-7068

In re Application of :
Theodore Mayer et al :
Application No. 09/880,516 :
Filed: June 12, 2001 :
Attorney Docket No. 45291/JEJ/P523 :

ON PETITION

This is a decision on the petition, filed November 30, 2004, under 37 CFR 1.313(c)(2) to withdraw the above-identified application from issue after payment of the issue fee.

The petition is **GRANTED**.

The above-identified application is withdrawn from issue for consideration of a submission under 37 CFR 1.114 (request for continued examination). See 37 CFR 1.313(c)(2).

Petitioner is advised that the issue fee paid on September 20, 2004 in the above-identified application cannot be refunded. If, however, the above-identified application is again allowed, petitioner may request that it be applied towards the issue fee required by the new Notice of Allowance.[1]

Telephone inquiries should be directed to the undersigned at (703) 305-8859.

After receipt of the file in the Office of Petitions, the application will be forwarded to Technology Center AU 2674 for processing of the request for continued examination under 37 CFR 1.114.

Karen Creasy

Karen Creasy
Petitions Examiner
Office of Petitions
Office of the Deputy Commissioner
for Patent Examination Policy

---

[1] The request to apply the issue fee to the new Notice may be satisfied by completing and returning the new Issue Fee Transmittal Form PTOL-85(b), which includes the following language thereon: "Commissioner for Patents is requested to apply the Issue Fee and Publication Fee (if any) or re-apply any previously paid issue fee to the application identified above." Petitioner is advised that, whether a fee is indicated as being due or not, the Issue Fee Transmittal Form **must** be completed and timely submitted to avoid abandonment. Note the language in bold text on the first page of the Notice of Allowance and Fee(s) Due (PTOL-85).

Approved for use through 04/30/2009. OMB 0651-0016
U.S. Patent and Trademark Office: U.S. DEPARTMENT OF COMMERCE
Under the Paperwork Reduction Act of 1995, no persons are required to respond to a collection of information unless it displays valid OMB control number.

PETITION TO ACCEPT UNINTENTIONALLY DELAYED PAYMENT OF MAINTENANCE FEE IN AN EXPIRED PATENT (37 CFR 1.378(c))

Patent Number	Issue Date (YYYY-MM-DD)	Application Number	Filing Date (YYYY-MM-DD)	Docket Number (if applicable)
6,592,310	2003-07-15	09/880,527	2001-06-12	142-01

CAUTION: Maintenance fee (and surcharge, if any) payment must correctly identify: (1) the patent number and (2) the application number of the actual U.S. application leading to issuance of that patent to ensure the fee(s) is/are associated with the correct patent. 37 CFR 1.366(c) and (d).

SMALL ENTITY
☐ Patentee claims, or has previously claimed, small entity status. See 37 CFR 1.27.

LOSS OF ENTITLEMENT TO SMALL ENTITY STATUS
☐ Patentee is no longer entitled to small entity status. See 37 CFR 1.27(g)

NOT Small Entity			Small Entity		
	Fee	Code		Fee	Code
◉	3 ½ year	(1551)	○	3 ½ year	(2551)
○	7 ½ year	(1552)	○	7 ½ year	(2552)
○	11 ½ year	(1553)	○	11 ½ year	(2553)

SURCHARGE
The surcharge required by 37 CFR 1.20(i)(2) (Fee Code 1558) must be paid as a condition of accepting unintentionally delayed payment of the maintenance fee.

MAINTENANCE FEE (37 CFR 1.20(e)-(g))
The appropriate maintenance fee must be submitted with this petition.

STATEMENT
THE UNDERSIGNED CERTIFIES THAT THE DELAY IN PAYMENT OF THE MAINTENANCE FEE TO THIS PATENT WAS UNINTENTIONAL

PETITIONER(S) REQUEST THAT THE DELAYED PAYMENT OF THE MAINTENANCE FEE BE ACCEPTED AND THE PATENT REINSTATED

THIS PORTION MUST BE COMPLETED BY THE SIGNATORY OR SIGNATORIES

37 CFR 1.378(d) states: "Any petition under this section must be signed by an attorney or agent registered to practice before the Patent and Trademark Office, or by the patentee, the assignee, or other party in interest."

I certify, in accordance with 37 CFR 1.4(d)(4) that I am

◉ An attorney or agent registered to practice before the Patent and Trademark Office

○ A sole patentee

○ A joint patentee; I certify that I am authorized to sign this submission on behalf of all the other patentees.

○ A joint patentee; all of whom are signing this e-petition

○ The assignee of record of the entire interest

Patent Practitioner			
A signature of the applicant or representative is required in accordance with 37 CFR 1.33 and 10.18. Please see 37 CFR 1.4(d) for the form of the signature			
Signature	/Ourmazd S. Ojan/	Date (YYYY-MM-DD)	2007-09-04
Name	Ourmazd S. Ojan	Registration Number	38065

This collection of information is required by 37 CFR 1.378(c). The information is required to obtain or retain a benefit by the public which is to file (and by the USPTO to process) an application. Confidentiality is governed by 35 U.S.C. 122 and 37 CFR 1.11 and 1.14. This collection is estimated to take 1 hour to complete, including gathering, preparing, and submitting the completed application form to the USPTO. Time will vary depending upon the individual case. Any comments on the amount of time you require to complete this form and/ or suggestions for reducing this burden, should be sent to the Chief Information Officer, U.S. Patent and Trademark Office, U.S. Department of Commerce, P.O. Box 1450, Alexandria, VA 22313-1450. DO NOT SEND FEES OR COMPLETED FORMS TO THIS ADDRESS. **This form can only be used when in conjunction with EFS-Web. If this form is mailed to the USPTO, it may cause delays in reinstating the patent.**

Privacy Act Statement

The Privacy Act of 1974 (P.L. 93-579) requires that you be given certain information in connection with your submission of the attached form related to a patent application or patent. Accordingly, pursuant to the requirements of the Act, please be advised that: (1) the general authority for the collection of this information is 35 U.S.C. 2(b)(2); (2) furnishing of the information solicited is voluntary; and (3) the principal purpose for which the information is used by the U.S. Patent and Trademark Office is to process and/or examine your submission related to a patent application or patent. If you do not furnish the requested information, the U.S. Patent and Trademark Office may not be able to process and/or examine your submission, which may result in termination of proceedings or abandonment of the application or expiration of the patent.

The information provided by you in this form will be subject to the following routine uses:

1. The information on this form will be treated confidentially to the extent allowed under the Freedom of Information Act (5 U.S.C. 552) and the Privacy Act (5 U.S.C. 552a). Records from this system of records may be disclosed to the Department of Justice to determine whether the Freedom of Information Act requires disclosure of these record s.

2. A record from this system of records may be disclosed, as a routine use, in the course of presenting evidence to a court, magistrate, or administrative tribunal, including disclosures to opposing counsel in the course of settlement negotiations.

3. A record in this system of records may be disclosed, as a routine use, to a Member of Congress submitting a request involving an individual, to whom the record pertains, when the individual has requested assistance from the Member with respect to the subject matter of the record.

4. A record in this system of records may be disclosed, as a routine use, to a contractor of the Agency having need for the information in order to perform a contract. Recipients of information shall be required to comply with the requirements of the Privacy Act of 1974, as amended, pursuant to 5 U.S.C. 552a(m).

5. A record related to an International Application filed under the Patent Cooperation Treaty in this system of records may be disclosed, as a routine use, to the International Bureau of the World Intellectual Property Organization, pursuant to the Patent Cooperation Treaty.

6. A record in this system of records may be disclosed, as a routine use, to another federal agency for purposes of National Security review (35 U.S.C. 181) and for review pursuant to the Atomic Energy Act (42 U.S.C. 218(c)).

7. A record from this system of records may be disclosed, as a routine use, to the Administrator, General Services, or his/her designee, during an inspection of records conducted by GSA as part of that agency's responsibility to recommend improvements in records management practices and programs, under authority of 44 U.S.C. 2904 and 2906. Such disclosure shall be made in accordance with the GSA regulations governing inspection of records for this purpose, and any other relevant (i.e., GSA or Commerce) directive. Such disclosure shall not be used to make determinations about individuals.

8. A record from this system of records may be disclosed, as a routine use, to the public after either publication of the application pursuant to 35 U.S.C. 122(b) or issuance of a patent pursuant to 35 U.S.C. 151. Further, a record may be disclosed, subject to the limitations of 37 CFR 1.14, as a routine use, to the public if the record was filed in an application which became abandoned or in which the proceedings were terminated and which application is referenced by either a published application, an application open to public inspections or an issued patent.

9. A record from this system of records may be disclosed, as a routine use, to a Federal, State, or local law enforcement agency, if the USPTO becomes aware of a violation or potential violation of law or regulation.

UNITED STATES PATENT AND TRADEMARK OFFICE

Commissioner for Patents
United States Patent and Trademark Office
P.O. Box 1450
Alexandria, VA 22313-1450
www.uspto.gov

In re Patent No. 6592310
Issue Date: July 15,2003
Application No. 09880527
Filed: June 12,2001
Attorney Docket No. 142-01

:
:DECISION GRANTING PETITION
:UNDER 37 CFR 1.378(c)
:

This is a decision on the electronic petition, filed September 4,2007 ,under 37 CFR 1.378(c) to accept the unintentionally delayed payment of the 3.5 year maintenance fee for the above-identified patent.

The petition is GRANTED.

The maintenance fee is accepted, and the above-identified patent reinstated as of September 4,2007 . This decision also constitutes notice that the fee has been accepted. An electronic copy of the petition and this decision has been created as an entry in an Image File Wrapper. Nevertheless, petitioner should print and retain an independent copy

Telephone inquires related to this electronic decision should be directed to the Electronic Business Center at 1-866-217-9197.

UNITED STATES PATENT AND TRADEMARK OFFICE

Commissioner for Patents
United States Patent and Trademark Office
P.O. Box 1450
Alexandria, VA 22313-1450
www.uspto.gov

APR 28 2005

#22

Acorn Cardiovascular, Inc.
P.O. Box 2903
Minneapolis, MN 55402

In re Application of Clifton A. Alferness et al Serial No. : 09/880,576 Filed : June 13, 2001 For : Cardiac Disease Treatment and Device	: DECISION ON PETITION : TO WITHDRAW : HOLDING OF : ABANDONMENT :

This is a decision on petitioner's request filed February 24, 2005, to review the holding of abandonment mailed January 6, 2005 for failure to respond to the Office action mailed April 2, 2004. There is no fee required for this petition.

In support of the request, petitioner has submitted a copy of an amendment; the amendment bearing a certificate of facsimile transmission dated June 15, 2004. Petitioner has also included a copy of a facsimile transmission report confirming transmission of the papers in question on June 15, 2004.

In view of the above, the Notice of Abandonment mailed January 6, 2005 is in error and is hereby vacated. The holding of abandonment is withdrawn. Upon the mailing of this decision, the application will be forwarded to the Examiner via the Legal Instruments Examiner for entry and consideration of the response received June 15, 2004.

Summary: Holding of Abandonment Withdrawn.

Richard A. Bertsch, Director
Technology Center 3700
Phone: (571) 272-3750

ak/04/25/05

UNITED STATES PATENT AND TRADEMARK OFFICE

Commissioner for Patents
United States Patent and Trademark Office
P.O. Box 1450
Alexandria, VA 22313-1450
www.uspto.gov

HICKMAN PALERMO TRUONG & BECKER, LLP
2055 GATEWAY PLACE
SUITE 550
SAN JOSE CA 95110

COPY MAILED

SEP 2 0 2007

OFFICE OF PETITIONS

In re Application of	:	
Lawrence G. Roberts	:	
Application No. 09/880,600	:	DECISION ON PETITION
Filed: June 12, 2001	:	TO WITHDRAW
Attorney Docket No. 60010-0012	:	FROM RECORD
	:	

This is a decision on the Request to Withdraw as attorney or agent of record under 37 C.F.R. § 1.36(b), filed February 20, 2007.

The request is **NOT APPROVED**.

A grantable request to withdraw as attorney/agent of record must be signed by every attorney/agent seeking to withdraw or contain a clear indication that one attorney is signing on behalf of another/others. A request to withdraw will not be approved unless at least 30 (thirty) days would remain between the date of approval and the later of the expiration date of a time to file a response or the expiration date of the maximum time period which can be extended under 37 C.F.R. § 1.136(a).

The request cannot be approved because no reasons for withdrawal have been provided. The Office cannot, at this time, determine whether practitioner's request is one of the mandatory or permissive reasons enumerated in 37 CFR 10.40. Any subsequent requests must include reasons for withdrawal. Please note that there is a space provided for on PTO/SB/83 (Request to Withdraw as Attorney or Agent) to supply practitioner's reasons.

The request cannot be approved because there remains less than 30 (thirty days) between the date of this decision and the maximum extendable time period for filing a response to the Office action mailed on March 21, 2007.

In order to request or take action in a patent matter, the assignee must establish its ownership of the patent to the satisfaction of the Director. In this regard, a Statement under 37 CFR 3.73(b) must have either: (i) documentary evidence of a chain of title from the original owner to the assignee (*e.g.*, copy of an executed assignment), and a statement affirming that the documentary evidence of the chain of title from the original owner to the assignee was or concurrently is being

submitted for recordation pursuant to § 3.11; or (ii) a statement specifying where documentary evidence of a chain of title from the original owner to the assignee is recorded in the assignment records of the Office (*e.g.*, reel and frame number).

There is an outstanding Office action mailed March 21, 2007 that requires a response by applicant.

All future communications from the Office will continue to be directed to the above-listed address until otherwise notified by applicant.

Telephone inquiries concerning this decision should be directed to undersigned at 571-272-1642.

April M. Wise
Petitions Examiner
Office of Petitions

cc: GEOFF MATTSON
SABLE NETWORKS, INC.
3171 JAY STREET
SANTA CLARA, CA 95054

UNITED STATES PATENT AND TRADEMARK OFFICE

UNITED STATES DEPARTMENT OF COMMERCE
United States Patent and Trademark Office
Address: COMMISSIONER FOR PATENTS
P.O. Box 1450
Alexandria, Virginia 22313-1450
www.uspto.gov

APPLICATION NO.	FILING DATE	FIRST NAMED INVENTOR	ATTORNEY DOCKET NO.	CONFIRMATION NO.
09/880,608	06/13/2001	Osamu Takagi	380-313	5979

1131 7590 08/28/2006

MICHAEL BEST & FRIEDRICH LLP
Two Prudential Plaza
180 North Stetson Avenue, Suite 2000
CHICAGO, IL 60601

EXAMINER
DUVERNE, JEAN F

ART UNIT	PAPER NUMBER
2839	

DATE MAILED: 08/28/2006

Please find below and/or attached an Office communication concerning this application or proceeding.

UNITED STATES PATENT AND TRADEMARK OFFICE

COMMISSIONER FOR PATENTS
UNITED STATES PATENT AND TRADEMARK OFFICE
P.O. BOX 1450
ALEXANDRIA, VA 22313-1450
www.uspto.gov

In re Patent No. TAKAGI ET AL.	
Issue Date: February 25, 2003	**DECISION DISMISSING**
Appl. No.: 09/880,608	**PETITION**
Filed: June 13, 2001	*37 CFR 1.324*
For: Connector Excellent in Reliability of Contact	

This is a decision on the petition filed June 30, 2003 to correct inventorship under 37 CFR 1.324.

The petition is DISMISSED.

Assignees have filed a petition requesting change of Inventorship and change of Assignment of this Patent (US 6,524,140)

MPEP 1481.01[R-3] states:

> Any request for the issuance of an application in the name of the assignee submitted after the date of payment of the issue fee, and any request for a patent to be corrected to state the name of the assignee must:
> (A) state that the assignment was submitted for recordation as set forth in 37 CFR 3.11 before issuance of the patent;
> (B) include a request for a certificate of correction under 37 CFR 1.323 along with the fee set forth in 37 CFR 1.20(a); and
> (C) include the processing fee set forth in 37 CFR 1.17(i). See 37 CFR 3.81(b).

It is unclear in this application's record if Matsushita Electric Industrial Co.,Ltd. (MEI) has complied with requirement A stated above. Because of lack of evidence, no change of Assignment will be entered at this time.

Further no record of assignment of this application in part or in whole to MEI has been made a part of this record. At this time it appears that Japan Aviation Electronics Industry, Ltd. (JAE) is the sole assignee of this application.

37 CFR 1.324 states :

> (a) **> Whenever through error a person is named in an issued patent as the inventor, or through error an inventor is not named in an issued patent and such error arose without any deceptive intention on his or her part, the Director, pursuant to 35 U.S.C. 256, may,

on application of all the parties and assignees, or on order of a court before which such matter is called in question, issue a certificate naming only the actual inventor or inventors. A petition to correct inventorship of a patent involved in an interference must comply with the requirements of this section and must be accompanied by a motion under § 41.121(a)(2) or § 41.121(a)(3) of this title.<

(b) **> Any request to correct inventorship of a patent pursuant to paragraph (a) of this section must be accompanied by:<

(1) Where one or more persons are being added, a statement from each person who is being added as an inventor that the inventorship error occurred without any deceptive intention on his or her part;

(2) A statement from the current named inventors who have not submitted a statement under paragraph (b)(1) of this section either agreeing to the change of inventorship or stating that they have no disagreement in regard to the requested change;

(3) A statement from all assignees of the parties submitting a statement under paragraphs (b)(1) and (b)(2) of this section agreeing to the change of inventorship in the patent, which statement must comply with the requirements of § 3.73(b) of this chapter; and

(4) The fee set forth in § 1.20(b).

It is unclear that the newly named inventors have assigned their interests in this application to either MEI or JAE. Because there is no record of their assignment of interest in this application, it is not clear that **ALL** assignees of the parties submitted the necessary statements are required by 1.324(b)(3).

In view of the above the petition is DISMISSED.

Tulsidas C Patel
Tulsidas Patel
Supervisory Patent Examiner
Art Unit 2839
Patent Examining Group 2800

MICHAEL BEST & FRIEDRICH LLP
Two Prudential Plaza
180 North Stetson Avenue, Suite 2000
CHICAGO, IL 60601

SPE RESPONSE FOR CERTIFICATE OF CORRECTION

Paper No.: _____

DATE : November 28, 2006

TO SPE OF : ART UNIT 2133

SUBJECT : Request for Certificate of Correction for Appl. No.: 09/880616 Patent No.: 7,062,704 B2

Please respond to this request for a certificate of correction within 7 days.

Please review the requested changes/corrections as shown in the **COCIN** document(s) in the IFW application image. No new matter should be introduced, nor should the scope or meaning of the claims be changed.

Please complete the response (see below) and forward the completed response to scanning using document code **COCX**.

Elisha Evans

Certificates of Correction Branch

703-308-9390 ext. 110

Thank You For Your Assistance

The request for issuing the above-identified correction(s) is hereby:

Note your decision on the appropriate box.

- ☒ **Approved** — All changes apply.
- ☐ **Approved in Part** — Specify below which changes **do not** apply.
- ☐ **Denied** — State the reasons for denial below.

Comments: _____

_____

_____

_____

_____

JACQUES LOUIS-JACQUES
SUPERVISORY PATENT EXAMINER
TECHNOLOGY CENTER 2100

2112
Art Unit

OIPE JC35
AUG 14 2001
PATENT & TRADEMARK OFFICE

#4

IN THE UNITED STATES PATENT AND TRADEMARK OFFICE

In re Application of: Burgess, et al.	§	Group Art No. Not assigned
Serial No.: 09/880,652	§	Examiner: Not assigned
Filed: June 13, 2001	§	Att'y Docket No.: 17575.0661
For: METHODS OF LABELLING BIOMOLECULES WITH FLUORESCENT DYES	§	Client Docket No.: TAMUS 1277

RESPONSE TO NOTICE OF INCOMPLETE NONPROVISIONAL APPLICATION

Commissioner for Patents
Washington, D.C. 20231

CERTIFICATE OF EXPRESS MAILING

NUMBER EL865848129US
DATE OF DEPOSIT August 14, 2001

I hereby certify that this paper or fee is being deposited with the U.S. Postal Service "EXPRESS MAIL POST OFFICE TO ADDRESSEE" service under 37 C.F.R. 1.10 on the date indicated above and is addressed to: Commissioner for Patents, Washington, D.C. 20231.

Debbie Spraine
Signature

Sir:

This replies to the Notice of Incomplete Nonprovisional Application mailed July 3, 2001. A copy of the Notice is enclosed.

Enclosed is the declaration of inventors Kevin Burgess and Richard Gibbs for this application.

Enclosed are the drawings for this application.

Applicant hereby authorizes the Patent and Trademark Office to charge deposit account number 02-0383 for any charges necessary for the filing of this response.

Respectfully submitted,

Christopher J. Buntel, Ph.D.
Reg. No. 44,573
AGENT FOR ASSIGNEE,
THE TEXAS A&M
UNIVERSITY SYSTEM

Baker Botts L.L.P.
One Shell Plaza
910 Louisiana
Houston, TX 77002-4995
(713) 229-1992

August 14, 2001

OIPE JC35
AUG 1 4 2001
PATENT & TRADEMARK OFFICE

IN THE UNITED STATES PATENT AND TRADEMARK OFFICE

In re Application of: Burgess, et al.	§	Group Art No. Not assigned
Serial No.: 09/880,652	§	Examiner: Not assigned
Filed: June 13, 2001	§	Att'y Docket No.: 17575.0661
For: METHODS OF LABELLING BIOMOLECULES WITH FLUORESCENT DYES	§	Client Docket No.: TAMUS 1277

TRANSMITTAL LETTER

Commissioner for Patents
Washington, D.C. 20231

CERTIFICATE OF EXPRESS MAILING

NUMBER EL865848129US
DATE OF DEPOSIT August 14, 2001

I hereby certify that this paper or fee is being deposited with the U.S. Postal Service "EXPRESS MAIL POST OFFICE TO ADDRESSEE" service under 37 C.F.R. 1.10 on the date indicated above and is addressed to: Commissioner for Patents, Washington, D.C. 20231.

Debra Spears
Signature

Sir:

Applicant hereby submits the following document to be filed with the United States Patent and Trademark Office:

1. Response to Notice of Incomplete Nonprovisional Application dated July 3, 2001; and
2. Postcard.

Please date stamp and return the enclosed postcard evidencing receipt of these materials.

The Commissioner is authorized to debit our Deposit Account No. 02-0383 for any underpayment of fees which may be due in association with this filing under 37 C.F.R. §§ 1.16-1.18.

Respectfully submitted,

Christopher J. Buntel, Ph.D.
Reg. No. 44,573
Customer No. 23640
AGENT FOR ASSIGNEE,
THE TEXAS A&
UNIVERSITY SYSTEM

Baker Botts L.L.P.
One Shell Plaza
910 Louisiana
Houston, TX 77002-4995
(713) 229-1992

August 14, 2001

08-15-01

03 CD

UNITED STATES PATENT AND TRADEMARK OFFICE

COMMISSIONER FOR PATENTS
UNITED STATES PATENT AND TRADEMARK OFFICE
WASHINGTON, D.C. 20231
www.uspto.gov

APPLICATION NUMBER	FILING/RECEIPT DATE	FIRST NAMED APPLICANT	ATTORNEY DOCKET NUMBER
09/880,652	06/13/2001	Kevin Burgess	017575.0661

CONFIRMATION NO. 7332

FORMALITIES LETTER

OC000000006257076

Baker Botts, L.L.P.
One Shell Plaza
910 Lousiana
Houston, TX 77002-4995

OIPE JC35 AUG 14 2001 PATENT & TRADEMARK OFFICE

Date Mailed: 07/03/2001

NOTICE OF INCOMPLETE NONPROVISIONAL APPLICATION

FILED UNDER 37 CFR 1.53(b)

A filing date has NOT been accorded to the above-identified application papers for the reason(s) indicated below.

All of the items noted below **and a newly executed oath or declaration covering the items must** be submitted within **TWO MONTHS** of the date of this Notice, unless otherwise indicated, or proceedings on the application will be terminated *(37 CFR 1.53(e))*.

The filing date will be the date of receipt of all items required below, unless otherwise indicated. Any assertions that the item(s) required below were submitted, or are not necessary for a filing date, must be by way of petition directed to the attention of the Office of Petitions accompanied by the $130.00 petition fee *(37 CFR 1.17(h))*. If the petition states that the application is entitled to a filing date, a request for a refund of the petition fee may be included in the petition.

- The application was deposited without drawings. 35 U.S.C. 113 (first sentence) requires a drawing "where necessary for the understanding of the subject matter sought to be patented." *Applicant should reconsider whether the drawings are necessary under 35 U.S.C. 113 (first sentence).*

A copy of this notice MUST be returned with the reply.

Customer Service Center
Initial Patent Examination Division (703) 308-1202

PART 2 - COPY TO BE RETURNED WITH RESPONSE

UNITED STATES PATENT AND TRADEMARK OFFICE

Commissioner for Patents
United States Patent and Trademark Office
P.O. Box 1450
Alexandria, VA 22313-1450
www.uspto.gov

OCT 14 2004

COGNIS CORPORATION
PATENT DEPARTMENT
300 BROOKSIDE AVENUE
AMBLER PA 19002

In re Application of	:
Steven Heck et al.	:
Serial No.: 09/880,695	: PETITION DECISION
Filed: June 12, 2001	:
Attorney Docket No.: H3172A PCT/US	:

This is in response to the petition under 37 CFR 1.181, filed June 8, 2004, for withdrawal of abandonment of the above identified application based on a timely response to the Office Action of October 20, 2003 and a reinstatement of the Appeal Brief.

A review of the file history shows that the examiner mailed an Office action to applicants on October 20, 2003, setting a three month shortened statutory period for reply. Upon failure to receive a reply the Office mailed a Notice of Abandonment to applicants on May 5, 2004. Applicants state that there was a timely response, which included a Supplemental Appeal Brief, filed on April 20, 2004 with a three month extension of time. The response and extension of time, which was timely, had been entered in the palm data base before the abandonment.

The petition is **GRANTED** to withdraw the holding of abandonment and to reinstate the Supplemental Reply Brief.

The application will be forwarded to the examiner for preparation of the Examiner's Answer or other appropriate action.

Should there be any questions about this decision please contact Jean F. Vollano, by letter addressed to Director, TC 1600, P.O. Box 1450, Alexandria, VA 22313-1450, or by telephone at 571-272-0648 or by facsimile sent to the general Office facsimile number.

Jean F Vollano for
Bruce Kisliuk
Director, Technology Center 1600

UNITED STATES PATENT AND TRADEMARK OFFICE

COMMISSIONER FOR PATENTS
UNITED STATES PATENT AND TRADEMARK OFFICE
WASHINGTON, D.C. 20231
www.uspto.gov

MAILED

MAY 1 9 2003

Technology Center 2100

Paper No. 10

Zagorin O'Brien & Graham LLP
401 W 15th Street
Suite 870
Austin, TX 78701

In re Application of: Richard J. Takahashi	)	
Application No. 09/880,699	)	
Filed: June 13, 2001	)	
For: METHOD AND APPARATUS FOR CREATING A MESSAGE DIGEST USING A ONE-WAY HASH ALGORITHM	)	**DECISION ON REQUEST FOR WITHDRAWAL AS ATTORNEY**

This is a decision on the Request To Withdraw from Representation filed May 6, 2003.

A grantable request to withdraw as attorney of record should indicate thereon the present mailing addresses of the attorney(s) who is/are withdrawing from the record and of the applicant. The request for withdrawal must be signed by every attorney seeking to withdraw or contain a clear indication that one attorney is signing on behalf of another/others. A request to withdraw will not be approved unless at least 30 (thirty) days would remain between the date of approval and the later of the expiration date of a time to file a response or the expiration date of the maximum time period which can be extended under 37 C.F.R. § 1. 136(a). The effective date of withdrawal being the date of decision and not the date of request. See M.P.E.P. § 402.06. 37 C.F.R. § 1.36 further requires that the applicant or patent owner be notified of the withdrawal of the attorney or agent.

The request is **GRANTED**.

All future communications from the Office will be directed to the below-listed address until otherwise notified by applicant. This correspondence address is provided by the withdrawn attorney(s). Applicant is reminded of the obligation to promptly notify the Patent and Trademark Office (Office) of any change in correspondence address to ensure receipt of all communications from the Office.

For Vincent N. Trans
Special Programs Examiner
Technology Center 2100
Computer Architecture and Software
(703) 305-9750

cc: Gammage & Burnham
Two North Central Ave.
18th Floor
Phoenix, AZ 85004

UNITED STATES PATENT AND TRADEMARK OFFICE

Commissioner for Patents
United States Patent and Trademark Office
P.O. Box 1450
Alexandria, VA 22313-1450
www.uspto.gov

Richard Takahashi
PO Box 12105
Tempe, AZ 85824-0036

COPY MAILED

FEB 16 2007

OFFICE OF PETITIONS

In re Application of Noehring et al. :
Application No. 09/880,701 :
Filing Date: June 13, 2001 :
Attorney Docket No. 044.0004 :

Decision on Petition

This is a decision on the petition under 37 CFR 1.137(b), filed November 27, 2006, to revive the above-identified application.

The petition is **granted**.

The above-identified application became abandoned for failure to submit the issue fee and publication fee in a timely manner in reply to the Notice of Allowance mailed March 13, 2006, 2006, which set a statutory period for reply of three (3) months. Accordingly, the above-identified application became abandoned on June 14, 2006. A Notice of Abandonment was mailed on July 21, 2006.

The instant petition requests revival of the application.

Petitioner has met the requirements to revive the above-identified application pursuant to 37 CFR 1.137(b). Therefore, the petition is granted and the application is revived.

The file does not indicate a change of address has been submitted, although the address given on the petition differs from the address of record. If appropriate, a request to change the address of record should be filed. A courtesy copy of this decision is being mailed to the address given on the petition; however, the Office will mail all future correspondence solely to the address of record.

The Office of Publications will be informed of the instant decision and the application will be issued as a patent in due course.

Telephone inquiries regarding this communication should be directed to Petitions Attorney Steven Brantley at (571) 272-3203.

Charles Steven Brantley
Senior Petitions Attorney
Office of Petitions

UNITED STATES PATENT AND TRADEMARK OFFICE

COMMISSIONER FOR PATENTS
UNITED STATES PATENT AND TRADEMARK OFFICE
WASHINGTON, D.C. 20231
www.uspto.gov

Paper No. 7

Crawford PLLC
Suite 390
1270 Northland Drive
St. Paul, MN 55120

COPY MAILED

DEC 1 0 2001

OFFICE OF PETITIONS

In re Application of
Paul A. Voois and Frederic Artru
Application No. 09/880,706
Filed: June 13, 2001
For: Communications Service Provider Network

DECISION GRANTING STATUS UNDER 37 CFR 1.47(a)

This is a decision in response to the petition under 37 CFR 1.47(a), filed October 9, 2001.

The petition under 37 CFR 1.47(a) is granted.

Petitioner has shown that the nonsigning inventor has refused to join in the filing of the above-identified application.

The above-identified application and papers have been reviewed and found in compliance with 37 CFR 1.47(a). This application is hereby accorded Rule 47 status. As provided in Rule 1.47(a), this Office will forward notice of this application's filing to the non-signing inventor. Notice of the filing of this application will also be published in the Official Gazette.

Telephone inquiries related to this decision should be directed to Latrice Bond at (703) 308-6911.

Latrice Bond

Latrice Bond
Paralegal Specialist
Office of Petitions
Office of the Deputy Commissioner for Patent Examination Policy

Frances Hicks

Frances Hicks
Lead Petitions Examiner
Office of Petitions
Office of the Deputy Commissioner for Patent Examination Policy

UNITED STATES PATENT AND TRADEMARK OFFICE

COMMISSIONER FOR PATENTS
UNITED STATES PATENT AND TRADEMARK OFFICE
WASHINGTON, D.C. 20231
www.uspto.gov

Frederic Artru
5302 Mc Kenna
Montreal, Quebec, Canada
H3T 1T8

COPY MAILED

DEC 1 0 2001

OFFICE OF PETITIONS

In re Application of
Paul A. Voois and Frederic Artru
Application No. 09/880,706
Filed: June 13, 2001
For: Communications Service Provider Network

Dear Mr. Artru:

You are named as a joint inventor in the above identified United States patent application, filed under the provisions of 35 U.S.C. 118 (United States Code), and 37 CFR 1.47(a), Rules of Practice in Patent Cases. Should a patent be granted on the application you will be designated therein as a joint inventor.

As a named inventor, you are entitled to inspect any paper in the file wrapper of the application, order copies of all or any patent thereof (at a prepaid cost per 37 CFR 1.19) or make your position of record in the application. Alternatively, you may arrange to do any of the preceding through a registered patent attorney or agent presenting written authorization from you. If you care to join in the application, counsel of record (see below) would presumably assist you. Joining in the application would entail the filing of an appropriate oath or declaration by you pursuant to 37 CFR 1.63.

Telephone inquiries regarding this communication should be directed to Latrice Bond at (703) 308-6911. Requests for information regarding your application should be directed to the File Information Unit at (703) 308-6911. Information regarding how to pay for and order a copy of the application, or a specific paper in the application, should be directed to Certification Division at (703) 308-9726 or 1 (800) 972-6382 (outside the Washington D.C. area).

Latrice Bond
Paralegal Specialist
Office of Petitions
Office of the Deputy Commissioner
for Patent Examination Policy

Frances Hicks
Lead Petitions Examiner
Office of Petitions
Office of the Deputy Commissioner
for Patent Examination Policy

cc: Crawford PLLC
Suite 390
1270 Northland Drive
St. Paul, MN 55120

UNITED STATES PATENT AND TRADEMARK OFFICE

COMMISSIONER FOR PATENTS
UNITED STATES PATENT AND TRADEMARK OFFICE
P.O. BOX 1450
ALEXANDRIA, VA 22313-1450
www.uspto.gov

GREENLEE WINNER AND SULLIVAN P C
4875 PEARL EAST CIRCLE
SUITE 200
BOULDER,CO 80301

COPY MAILED

JAN 24 2005

OFFICE OF PETITIONS

ON PETITION

In re Application of	:
Ruedi Aebersold, et al.	:
Application No. 09/880,713	:
Filed: June 12, 2001	:
Attorney Docket No. 39-00	:

This is a decision on the petition, filed January 21, 2005, under 37 CFR 1.313(c)(2) to withdraw the above-identified application from issue after payment of the issue fee.

The petition is **GRANTED**.

The above-identified application is withdrawn from issue for consideration of a submission under 37 CFR 1.114 (request for continued examination). See 37 CFR 1.313(c)(2).

Petitioner is advised that the issue fee paid on August 6, 2004, in the above-identified application cannot be refunded. If, however, the above-identified application is again allowed, petitioner may request that it be applied towards the issue fee required by the new Notice of Allowance. [1]

Telephone inquiries relating to this decision should be directed to the undersigned at (571) 272-3204.

The application is being referred to Technology Center AU 1641 for further processing of the request for continued examination under 37 CFR 1.114.

Sherry D. Brinkley
Petitions Examiner
Office of Petitions
Office of the Deputy Commissioner
for Patent Examination Policy

[1]The request to apply the issue fee to the new Notice may be satisfied by completing and returning the new Issue Fee Transmittal Form PTOL-85(b), which includes the following language thereon: " Commissioner for Patents is requested to apply the Issue Fee and Publication Fee (if any) or re-apply any previously paid issue fee to the application identified above." Petitioner is advised that, whether a fee is indicated as being due or not, the Issue Fee Transmittal Form **must** be completed and timely submitted to avoid abandonment. Note the language in bold text on the first page of the Notice of Allowance and Fee(s) Due (PTOL-85).

UNITED STATES PATENT AND TRADEMARK OFFICE

COMMISSIONER FOR PATENTS
UNITED STATES PATENT AND TRADEMARK OFFICE
WASHINGTON, D.C. 20231
www.uspto.gov

Paper No. 5

Perkins Coie
1201 Third Avenue, Suite 4800
Seattle, WA 98101-3099

COPY MAILED

AUG 2 9 2002

OFFICE OF PETITIONS

In re Application of :
Thomas L. Ritzdorf et al. :
Application No. 09/880,715 :
Filed: June 12, 2001 :
Attorney Docket No. 291958162US1 :

ON PETITION

This is a decision on the petition under 37 CFR 1.137(b), filed August 5, 2002, to revive the above-identified application.

The petition is GRANTED.

The above-identified application became abandoned for failure to reply in a timely manner to the Notice to File Missing Parts of Application (Notice) mailed July 2, 2001. The Notice set a period for reply of two (2) months from the mail date of the Notice. No extensions of time under the provisions of 37 CFR 1.136(a) were obtained. Accordingly, the above-identified application became abandoned on September 3, 2001.

The application file is being forwarded to the Office of Initial Patent Examination for further processing.

Telephone inquiries concerning this matter may be directed to the undersigned at (703) 308-6911.

Latrice Bond

Latrice Bond
Paralegal Specialist
Office of Petitions
Office of the Deputy Commissioner
for Patent Examination Policy

UNITED STATES PATENT AND TRADEMARK OFFICE

COMMISSIONER FOR PATENTS
UNITED STATES PATENT AND TRADEMARK OFFICE
P.O. BOX 1450
ALEXANDRIA, VA 22313-1450
www.uspto.gov

DIVERSA CORPORATION
4955 DIRECTORS PLACE
SAN DIEGO, CA 92121

COPY MAILED

MAR 2 8 2005

OFFICE OF PETITIONS

In re Application of
Jay M. Short, et al.
Application No. 09/880,729
Filed: June 12, 2001
Attorney Docket No.: 09010-003005

ON PETITION

This is a decision on the petition under 37 CFR 1.137(b), filed January 31, 2005, to revive the above-identified application. The application became abandoned for failure to file a brief within the time period set by 37 CFR 1.192(a).

The petition is **GRANTED**.

The application is being revived solely for purposes of continuity. As continuity has been established by this decision reviving the above-identified application, the above-identified application is again abandoned in favor of continuing Application No. 11/034,411 filed Janaury 11, 2005.

Extensions of time under 37 CFR 1.136 are available only if asked for "prior to or with the response." In no case, however, may an applicant respond later than the maximum time period set by statute. Accordingly, if the question of abandonment arises when the provisions of 37 CFR 1.136 can no longer be used, then the application is abandoned when the unextended time for response has expired. Therefore, no extension of time fees are due on a petition for revival. In view thereof, the 5-month extension of time fee is unnecessary and will not be charged to counsel's deposit account.

Telephone inquiries concerning this decision should be directed to the undersigned at (571) 272-3204.

Sherry D. Brinkley
Petitions Examiner
Office of Petitions
Office of the Deputy Commissioner
for Patent Examination Policy

UNITED STATES PATENT AND TRADEMARK OFFICE

COMMISSIONER FOR PATENTS
UNITED STATES PATENT AND TRADEMARK OFFICE
WASHINGTON, D.C. 20231
www.uspto.gov

TOWNSEND AND TOWNSEND AND CREW, LLP
TWO EMBARCADERO CENTER
EIGHTH FLOOR
SAN FRANCISCO, CA 94111-3834

COPY MAILED

DEC 0 5 2002

OFFICE OF PETITIONS

In re Application of
Soga, et al
Application No. 09/880,733
Filed: June 12, 2001
Attorney Docket No. 16869S-027500US

DECISION GRANTING PETITION

This is a decision on the petition under 37 CFR 1.10(c), filed October 15, 2001, requesting that the above-identified application be accorded a filing date of June 12, 2001, rather than the presently accorded filing date of June 13, 2001.

Petitioners allege that the application was deposited in Express Mail service on June 12, 2001. In support, the petition is accompanied by a copy of Express Mail Receipt No. EL265821354US (the same Express Mail number found on the original application papers located in the official file) showing a "date in" of June 12, 2001.

In view of the above, the petition is **GRANTED**.

Accordingly, the application is entitled to a filing date of June 12, 2001.

Since the instant petition has been granted, no petition fee is required. The $130.00 petition fee, submitted October 15, 2001, will be refunded to deposit account no. 20-1430

The application is being forwarded to the Office of Initial Patent Examination for issuance of a corrected filing receipt. The application will then be returned to Technology Center 2800 for examination in due course.

Telephone inquiries concerning this matter may be directed to Petitions Attorney Edward Tannouse at (703) 306-9200.

For

Beverly M. Flanagan
Supervisory Petitions Examiner
Office of Petitions
Office of the Deputy Commissioner
for Patent Examination Policy

UNITED STATES PATENT AND TRADEMARK OFFICE

Commissioner for Patents
United States Patent and Trademark Office
P.O. Box 1450
Alexandria, VA 22313-1450
www.uspto.gov

COPY MAILED

JUN 1 2 2006

OFFICE OF PETITIONS

Human Genome Science Inc.
Intellectual Property Dept.
14200 Shady Grove Road
Rockville, Maryland 20850

In re Application of
Ruben et al.
Application No. 09/880,748
Filed: June 15, 2001
Attorney Docket No. PF523P1

: DECISION GRANTING PETITION

This decision is in response to Applicants' "APPLICATION FOR PATENT TERM ADJUSTMENT UNDER 37 CFR 1.705(b)" timely filed on March 20, 2006 requesting that the Office adjust the PTA determination at the time of the mailing of the notice of issuance from a determination of 354 days to a determination of either 374 or 428 days.

Applicants application for PTA is **GRANTED..** The Office will adjust the PTA calculation at the time of the mailing of the notice of allowance to adjust this determination to reflect this decision. The proper amount of PTA at the time of the mailing of the notice of allowance is **374 days.**

Applicants analysis is very thorough and detailed. The Office thanks applicants for their review of such PTA determination. Applicants arguments and facts are accurate. Accordingly, the overall office delay is 614 days as asserted by applicant. As for applicant delay, the office believes the proper amount of delay is 240 days. The applicants addressed the submission of the September 27, 2005 paper as a reduction under 37 CFR 1.704(c)(8) but the reduction is pursuant to 1.704(b). The amendment after final on August 4, 2005 did not place the case in condition for allowance so the three-month clock continued until the submission on September 27, 2005 that placed the case in condition for allowance. The delay was the same 54 days as asserted by applicant but the rationale was because of 1.704(b) rather than 1.704(c)(8). Accordingly the correct amount of PTA at the time of the mailing of the notice of allowance is 374 days (614-240=374).

After the mailing of this decision, the Office will forward this patented file to the Office of Patent Publications for a prompt issuance of the patent. The Office notes that any Office failure to meet the requirements of 37 CFR 1.702(a)(4) and 1.702(b) will be additionally added to the present determination and provided notice of such change in the issue notification letter that is mailed to applicants approximately three weeks prior to the issue date of the patent. Any delays by applicant pursuant to 37 CFR 1.704(c)(10) will reduce the amount determined at the notice of allowance and be reflected in the same issue notification letter.

The Office has assessed the $200.00 fee. No additional fees are required in this deciding this application.

Any questions concerning this decision should be directed to Kery Fries, Senior Legal Advisor, Office of Patent Legal Administration, Office of Deputy Commissioner for Patent Examination Policy, at 571-272-7757.

Kery A Fries

Kery Fries
Senior Legal
Office of Patent Legal Administration
Office of Deputy Commissioner
For Patent Examination Policy

cc: adjusted Pair calculation

PALM INTRANET

Day : Friday
Date: 6/9/2006
Time: 13:11:05

PTA Calculations for Application: 09/880748			
Application Filing Date:	06/15/2001	PTO Delay (PTO):	509
Issue Date of Patent:		Three Years:	0
Pre-Issue Petitions:	0	Applicant Delay (APPL):	155
Post-Issue Petitions:	0	Total PTA (days):	374
PTO Delay Adjustment:	20		

File Contents History

Number	Date	Contents Description	PTO	APPL	START
65	06/09/2006	ADJUSTMENT OF PTA CALCULATION BY PTO	20		
57	12/21/2005	MAIL NOTICE OF ALLOWANCE	17		44
56	12/16/2005	ISSUE REVISION COMPLETED			
55	12/16/2005	NOTICE OF ALLOWANCE DATA VERIFICATION COMPLETED			
54	12/16/2005	CASE DOCKETED TO EXAMINER IN GAU			
53	12/16/2005	NOTICE OF ALLOWABILITY			
52	12/06/2005	IFW TSS PROCESSING BY TECH CENTER COMPLETE			
50	11/04/2005	REQUEST FOR EXTENSION OF TIME - GRANTED			
49	09/27/2005	RULE 47 / 48 CORRECTION OF INVENTORSHIP PAPERS FILED			
48	09/28/2005	MAIL ADVISORY ACTION (PTOL - 303)			
47	09/26/2005	ADVISORY ACTION (PTOL-303)			
46	08/04/2005	AFFIDAVIT(S) (RULE 131 OR 132) OR EXHIBIT(S) RECEIVED			
45	08/11/2005	DATE FORWARDED TO EXAMINER			
44	08/04/2005	AMENDMENT AFTER FINAL REJECTION			
43	05/04/2005	MAIL FINAL REJECTION (PTOL - 326)	20		35
42	04/29/2005	FINAL REJECTION			
41	01/18/2005	SUBSTITUTE SPECIFICATION FILED			
40	01/31/2005	DATE FORWARDED TO EXAMINER			
39	01/18/2005	SUPPLEMENTAL RESPONSE		35	35
38	01/18/2005	WORKFLOW INCOMING AMENDMENT IFW			
37	12/14/2004	AFFIDAVIT(S) (RULE 131 OR 132) OR EXHIBIT(S) RECEIVED			
36	12/20/2004	DATE FORWARDED TO EXAMINER			

35	12/14/2004	RESPONSE AFTER NON-FINAL ACTION			
34	12/14/2004	WORKFLOW INCOMING AMENDMENT IFW			
30	09/14/2004	REFERENCE CAPTURE ON IDS			
29	09/14/2004	MAIL NON-FINAL REJECTION	207		21
28	09/13/2004	NON-FINAL REJECTION			
25	12/05/2003	INFORMATION DISCLOSURE STATEMENT (IDS) FILED		46	21
24	11/13/2003	CASE DOCKETED TO EXAMINER IN GAU			
23	11/05/2003	CASE DOCKETED TO EXAMINER IN GAU			
22	10/23/2003	DATE FORWARDED TO EXAMINER			
21	10/20/2003	RESPONSE TO ELECTION / RESTRICTION FILED		74	18
20	10/20/2003	REQUEST FOR EXTENSION OF TIME - GRANTED			
19	06/02/2003	EXAMINER INTERVIEW SUMMARY RECORD (PTOL - 413)			
18	05/07/2003	MAIL RESTRICTION REQUIREMENT	265		-1
17	05/05/2003	REQUIREMENT FOR RESTRICTION / ELECTION			
16	08/14/2002	CASE DOCKETED TO EXAMINER IN GAU			
15	06/27/2002	CASE DOCKETED TO EXAMINER IN GAU			
14	05/24/2002	APPLICATION DISPATCHED FROM OIPE			
13	05/23/2002	APPLICATION IS NOW COMPLETE			
12	03/08/2002	A SET OF SYMBOLS AND PROCEDURES, PROVIDED TO THE PTO ON A SET OF COMPUTER LISTINGS, THAT DESCRIBE IN			
11	03/08/2002	A STATEMENT BY ONE OR MORE INVENTORS SATISFYING THE REQUIREMENT UNDER 35 USC 115, OATH OF THE APPLIC			
10	12/11/2001	NOTICE MAILED--APPLICATION INCOMPLETE--FILING DATE ASSIGNED			
6	12/07/2001	CORRESPONDENCE ADDRESS CHANGE			
5	12/05/2001	IFW SCAN & PACR AUTO SECURITY REVIEW			
4	11/28/2001	IFW SCAN & PACR AUTO SECURITY REVIEW			
3	07/19/2001	CRF IS GOOD TECHNICALLY / ENTERED INTO DATABASE			
2	06/15/2001	CRF DISK HAS BEEN RECEIVED BY PREEXAM / GROUP / PCT			
1	06/15/2001	INITIAL EXAM TEAM NN			

Search Another: Application# [ ] Search

EXPLANATION OF PTA CALCULATION

UNITED STATES PATENT AND TRADEMARK OFFICE

Commissioner for Patents
United States Patent and Trademark Office
P.O. Box 1450
Alexandria, VA 22313-1450
www.uspto.gov

COPY MAILED

JUN 12 2006

OFFICE OF PETITIONS

Human Genome Science Inc.
Intellectual Property Dept.
14200 Shady Grove Road
Rockville, Maryland 20850

In re Application of
Ruben et al.
Application No. 09/880,748
Filed: June 15, 2001
Attorney Docket No. PF523P1

: DECISION GRANTING PETITION

This decision is in response to Applicants' "APPLICATION FOR PATENT TERM ADJUSTMENT UNDER 37 CFR 1.705(b)" timely filed on March 20, 2006 requesting that the Office adjust the PTA determination at the time of the mailing of the notice of issuance from a determination of 354 days to a determination of either 374 or 428 days.

Applicants application for PTA is **GRANTED..** The Office will adjust the PTA calculation at the time of the mailing of the notice of allowance to adjust this determination to reflect this decision. The proper amount of PTA at the time of the mailing of the notice of allowance is **374 days.**

Applicants analysis is very thorough and detailed. The Office thanks applicants for their review of such PTA determination. Applicants arguments and facts are accurate. Accordingly, the overall office delay is 614 days as asserted by applicant. As for applicant delay, the office believes the proper amount of delay is 240 days. The applicants addressed the submission of the September 27, 2005 paper as a reduction under 37 CFR 1.704(c)(8) but the reduction is pursuant to 1.704(b). The amendment after final on August 4, 2005 did not place the case in condition for allowance so the three-month clock continued until the submission on September 27, 2005 that placed the case in condition for allowance. The delay was the same 54 days as asserted by applicant but the rationale was because of 1.704(b) rather than 1.704(c)(8). Accordingly the correct amount of PTA at the time of the mailing of the notice of allowance is 374 days (614-240=374).

After the mailing of this decision, the Office will forward this patented file to the Office of Patent Publications for a prompt issuance of the patent. The Office notes that any Office failure to meet the requirements of 37 CFR 1.702(a)(4) and 1.702(b) will be additionally added to the present determination and provided notice of such change in the issue notification letter that is mailed to applicants approximately three weeks prior to the issue date of the patent. Any delays by applicant pursuant to 37 CFR 1.704(c)(10) will reduce the amount determined at the notice of allowance and be reflected in the same issue notification letter.

The Office has assessed the $200.00 fee. No additional fees are required in this deciding this application.

Any questions concerning this decision should be directed to Kery Fries, Senior Legal Advisor, Office of Patent Legal Administration, Office of Deputy Commissioner for Patent Examination Policy, at 571-272-7757.

Kery A Fries

Kery Fries
Senior Legal
Office of Patent Legal Administration
Office of Deputy Commissioner
For Patent Examination Policy

cc: adjusted Pair calculation

UNITED STATES PATENT AND TRADEMARK OFFICE

Commissioner for Patents
United States Patent and Trademark Office
P.O. Box 1450
Alexandria, VA 22313-145

MAY 16 2005

DICKSTEIN SHAPIRO MORIN & OSHINSKY LLP
2101 L Street, NW
Washington, DC 20037

In re application of David K. Herman	:	
Application No. 09/880,788	:	**DECISION ON REQUEST**
Filed: June 15, 2001	:	**FOR WITHDRAWAL OF**
For: JUST IN TIME DEMAND PULL PROCESS AND ASSOCIATED APPARATUS	:	**ATTORNEY**

This is a decision on the request filed on April 14, 2005, under 37 CFR 1.36 and MPEP 402.06, requesting permission to withdraw as the attorney of record in the above-identified application.

The request is **NOT APPROVED**

Under 37 CFR 1.36 an attorney may withdraw only upon application to and approval by the Commissioner. It should be noted that a withdrawal is effective when approved, not when filed. Besides giving due notice to his or her client and delivering to the client all papers and property to which the client is entitled as specified under 37 CFR 10.40, approval of such a request requires that the following conditions be met:

A) Each attorney of record must sign the notice of withdrawal, or the notice must contain a clear indication of one attorney signing on behalf of another, because the Office does not recognize law firms;

B) A proper reason for the withdrawal as enumerated in 37 CFR 10.40(b) or subsection (1)-(6) of 37 CFR 10.40(c) must be provided; and

C) If withdrawal is requested in accordance with 37 CFR 10.40(c) above, there must be at least 30 days between approval of the withdrawal and the later of the expiration date of a time period for reply or the expiration date of the period which can be obtained by a petition and fee for extension of time under 37 CFR 1.136(a).

The request to withdraw as attorney in the above-identified application is not approved because the request does not comply with Items A) and B).

As to Item A), the attorneys listed in the request do not correspond with those named in the Power of Attorney in the declaration, thereby creating confusion as to who is withdrawing. Therefore, some attorneys originally appointed would still be of record if the request were approved. It does not appear that that is the intent of the request. To alleviate this problem, it is suggested that the request be resubmitted and that such request specifically state that the signing attorney is signing on behalf of all attorneys of record in this application.

As to Item B), while a reason may be provided by referencing a specific portion of 37 CFR 10.40, the reason must deal with actions by the client. In this case, there is nothing in the file record that indicates the existence of an assignee or that the assignee is the client. Absent a 3.73(b) statement, the "client" referred to in 37 CFR 10.40 is seen as being those individuals who conferred power upon the attorneys, in this case the inventors.

Steven N. Meyers
Special Programs Examiner
Patent Technology Center 3600
(571) 272-6611

SNM/pav: 05/12/05

UNITED STATES PATENT AND TRADEMARK OFFICE

Commissioner for Patents
United States Patent and Trademark Office
P.O. Box 1450
Alexandria, VA 22313-1450
www.uspto.gov

AT&T LEGAL DEPARTMENT – WK
ATTN: PATENT DOCKETING
ROOM 2A-207
ONE AT&T WAY
BEDMINSTER NJ 07921

COPY MAILED

JUL 20 2009

OFFICE OF PETITIONS

In re Application of	:	
F. David STALLWORTH	:	
Application No. 09/880,848	:	DECISION ON PETITION
Filed: June 15, 2001	:	TO WITHDRAW
Attorney Docket No. 20009-005US01 (01026)		FROM RECORD
	:	

This is a decision on the Request to Withdraw as attorney or agent of record under 37 C.F.R. § 1.36(b), filed June 24, 2009.

The request is **NOT APPROVED**.

A grantable request to withdraw as attorney/agent of record must be signed by every attorney/agent seeking to withdraw or contain a clear indication that one attorney is signing on behalf of another/others. The Office requires the practitioner(s) requesting withdrawal to certify that he, she, or they have: (1) given reasonable notice to the client, prior to the expiration of the response period, that the practitioner(s) intends to withdraw from employment; (2) delivered to the client or a duly authorized representative of the client all papers and property (including funds) to which the client is entitled; and (3) notified the client of any responses that may be due and the time frame within which the client must respond, pursuant 37 CFR 10.40(c).

The request cannot be approved because the attorneys of record were not appointed by registration numbers, as indicated.

All future communications from the Office will continue to be directed to the above-listed address until otherwise notified by applicant.

Telephone inquiries concerning this decision should be directed to the undersigned at 571-272-6735.

Diane Goodwyn
Petitions Examiner
Office of Petitions

cc: JERAMIE J. KEYS
P.O. BOX 71355
MARIETTA, GA 30007-1355

UNITED STATES PATENT AND TRADEMARK OFFICE

Commissioner for Patents
United States Patent and Trademark Office
P.O. Box 1450
Alexandria, VA 22313-1450
www.uspto.gov

COPY MAILED

SEP 25 2006

OFFICE OF PETITIONS

DAVID GROSSMAN
518 WOODLAND CT. NW
VIENNA, VA 22180

In re Application of
Schumann, et al.
Application No. 09/880,856
Filed: June 15, 2001
Attorney Docket No. 1999-23US

ON PETITION

This is a decision on the petition to withdraw the holding of abandonment filed June 19, 2006.

The petition is **DISMISSED**. The application is also **ABANDONED.**

Petitioner is allowed a period for response of two-months from the mailing date of this decision. The response should be titled "Renewed Petition to Withdraw the Holding of Abandonment" Extensions of the time set for reply are available pursuant to 37 CFR 1.136.

The above-identified application became abandoned for failure to reply to Notice of Allowance and Issue Fee Due mailed November 30, 2005, which set a statutory period for reply of three months from its mailing date. A response was not received within the allowable period and the application became abandoned March 1, 2005. Office records indicate that the Notice of Allowance and Issue Fee Due was returned as undeliverable on December 12, 2005. The instant petition requests that the holding of abandonment be withdrawn because the Notice of Allowance and Issue Fee Due was not received.

The petition states that a change of correspondence address was filed in the fall of 2005; the petition was not accompanied by any proof that the change of correspondence address was filed in the fall of 2005, i.e., an Office date-stamped postcard or copy of the change of correspondence address with a certificate of mailing, and the change of correspondence purportedly filed in the fall of 2005 was not found in the application file. Without such evidence, it is presumed that the Notice of Allowance and Issue Fee Due was mailed to the most current address of record for petitioner and that petitioner failed to promptly notify the Office of the change of correspondence address. Petitioner must establish that a proper request to change the correspondence address was filed prior to the mailing of the Notice of Allowance and Issue Fee Due on November 30, 2005.

The Corrected Notice of Allowance and Issue Fee Due mailed August 22, 2006, is noted. Petitioner is advised that this notice has no bearing on the undersigned's determination that the application is in an abandoned status. Petitioner is further advised that an outstanding petition does not normally toll the time period for responding to an outstanding Office action. Accordingly, petitioner should provide a timely response to the Corrected Notice of Allowance and Issue Fee Due while also resolving the issue presented by the instant petition.

Further correspondence with respect to this matter should be addressed as follows:

By mail: Commissioner for Patents
United States Patent and Trademark Office
Box 1450
Alexandria, VA 22313-1450

By facsimile: (571) 273-8300
Attn: Office of Petitions

Telephone inquiries regarding this decision should be directed to the undersigned (571) 272-3222.

Kenya A. McLaughlin
Petitions Attorney
Office of Petitions

UNITED STATES PATENT AND TRADEMARK OFFICE

Commissioner for Patents
United States Patent and Trademark Office
P.O. Box 1450
Alexandria, VA 22313-1450
www.uspto.gov

DAVID GROSSMAN
518 WOODLAND CT. NW
VIENNA, VA 22180,

COPY MAILED

NOV 06 2006

OFFICE OF PETITIONS

Schumann, et al.

Application No. 09/880,856

Filed: June 15, 2001

Attorney Docket No. 1999-23US

DECISION ON PETITION

This is a decision on the petition under 37 CFR §1.137(b), October 11, 2006, to revive the above-identified application.

The petition is **granted**.

This application became abandoned for failure to timely remit the issue fee of $1400.00 and publication fee of $300.00 as required by the Notice of Allowance and Issue Fee Due (the "Notice") mailed November 30, 2005. The Notice set forth a three (3) month statutory period for reply. No response was received within the allowable period. Accordingly, this application became abandoned on March 1, 2006.

The issue fee and publication fee were received on October 11, 2006.

Form PTOL-85B, filed October 11, 2006, is noted and made of record.

The application is being directed to the Office of Patent Publications for further processing.

Telephone inquiries concerning this decision may be directed to the undersigned at (571) 272-3222.

Kenya A. McLaughlin
Petitions Attorney
Office of Petitions

UNITED STATES PATENT AND TRADEMARK OFFICE

COMMISSIONER FOR PATENTS
UNITED STATES PATENT AND TRADEMARK OFFICE
P.O. BOX 1450
ALEXANDRIA, VA 22313-1450
www.uspto.gov

MAIL

DEC 8 2004

DIRECTOR OFFICE
TECHNOLOGY CENTER 2600

BIRCH STEWART KOLASCH & BIRCH
PO BOX 747
FALLS CHURCH VA 22040-0747

In re Application of:
Paul Jeon, et al.
Application Serial No.: 09/880,857
Filed: June 15, 2001
For: **NETWORK INFRASTRUCTURE INTEGRATED SYSTEM**

DECISION
ON PETITION

This is a decision on the petition filed October 6, 2004 under 37 CFR § 1.181 in regard to the Examiner's Refusal to enter an amendment after final Office action.

Petitioner states that the "..Amendment would not require further consideration..." and "the remarks attached to the Advisory Action do not present any reasoning in support of the conclusion that entry of the amendment for purposes of an appeal would require further consideration and/or search, thereby denying Applicants fundamental substantive and procedural due process as required under the Administrative Procedures Act. See in this regard, In re Zurko, 119 S.Ct. 1816, 50 USPQ 1930 (1999), and In re Gartside, 53 USPQ2d 1769 (Fed. Cir. 2000)."

A review of the file records reveals that a non-final Office action was mailed on July 16, 2003 wherein Claim 1 was rejected under 35 U.S.C. §102(b) as being anticipated by Applicants admission of prior art. Claims 2-5 were rejected under 35 U.S.C. §103 as being unpatentable over the combination of Applicant's admission of prior art in view of Bullock and claims 6-12 were rejected under 35 U.S.C. §103 as being unpatentable over the combination of Applicant's admission of prior art in view of Sanderson.

On November 17, 2003, Applicants responded to the outstanding non-final Office action by making minor amendments to the claims (e.g., spelling out acronyms), adding claim 13 and presenting arguments against the applied rejections

On February 11, 2004 the Office mailed a final Office action wherein the examiner's position continued to be that: claim 1 was anticipated by Applicant's admission of prior art, claims 2-5 were held as unpatentable under 35 U.S.C. §103 over the combination of Applicant's admission of prior art in view of Bullock and claims 6-12 were held as unpatentable over the combination of Applicant's admission of prior art in view of Sanderson. In addition claim 13 was held as being unpatentable under 35 U.S.C. § 103 over the combination of Applicant's admission of prior art in view of Nelson.

On July 12, 2004, Applicant's file an amendment after final Office action, requesting the incorporation of some of the limitations from claim 2 and claim 6 into the independent claim.

On August 19, 2004 the Office mailed an advisory action which indicated that the proposed amendment did not place the application in better form for appeal by materially reducing or simplifying the issues for appeal.

Petitioner does not argue the finality of the Office action mailed February 11, 2004 within the instant petition.

MPEP §714.12 Amendments After Final Rejection or Action, states in part:

> Once a final rejection that is not premature has been entered in an application, applicant or patent owner no longer has any right to unrestricted further prosecution. This does not mean that no further amendment or argument will be considered. Any amendment that will place the application either in condition for allowance or in better form for appeal may be entered. Also, amendments complying with objections or requirements as to form are to be permitted after final action in accordance with 37 CFR 1.116(b). Ordinarily, amendments filed after the final action are not entered unless approved by the examiner. See MPEP § 706.07(f), § 714.13 and § 1207. [emphasis added]

37 CFR §1.116. Amendments after final action or appeal, states in part:

> (b) After a final rejection or other final action (§ 1.113) in an application or in an ex parte reexamination filed under § 1.510, or an action closing prosecution (§ 1.949) in an inter partes reexamination filed under § 1.913, amendments may be made canceling claims or complying with any requirement of form expressly set forth in a previous Office action. Amendments presenting rejected claims in better form for consideration on appeal may be admitted. The admission of, or refusal to admit, any amendment after a final rejection, a final action, an action closing prosecution, or any related proceedings will not operate to relieve the application or patent under reexamination from its condition as subject to appeal or to save the application from abandonment under § 1.135, or the reexamination from termination. No amendment can be made in an inter partes reexamination proceeding after the right of appeal notice under § 1.953 except as provided for in paragraph (d) of this section. [emphasis added]

The amendment filed July 12, 2004 does not cancel claims or amend claims as a result of examiner requirement. The proposed amendment would not place the application in condition for allowance. Thus the only question is whether or not the amendment places the application in better form for appeal. Given that: (1) only some of the limitations of claims 2 and 6 are requested to be incorporated into the independent claim, (2) the proposed amendment would change the scope of the remaining dependent claims (e.g., Independent claim 1 and dependent claim 5 prior to the proposed amendment did not require a network bridge which included input protection means for protecting internal circuitry thereof and removing unwanted electric components of the data signal flowing between the telephone line network and the power line network, etc.), and (3) the scope of the independent claim would change, does not present the application in better form for appeal.

35 U.S.C. §134. Appeal to the Board of Patent Appeals and Interferences, states in part:

> (a) PATENT APPLICANT. — An applicant for a patent, any of whose claims has been twice rejected, may appeal from the decision of the administrative patent judge to the Board of Patent Appeals and Interferences, having once paid the fee for such appeal. [emphasis added]

Given that Applicant's claims have been twice rejected, Applicants have the opportunity to appeal to the Board of Patent Appeals and Interferences. Therefore, Applicants have not been denied "..fundamental substantive and procedural due process" as argued.

Accordingly, Applicant's petition to have the amendment after final entered is **DENIED**.

The file is being forwarded to the Technology Center's Central Files to await Applicant's Brief.

Mark Powell, Director
Technology Center 2600
Communications

UNITED STATES PATENT AND TRADEMARK OFFICE

Commissioner for Patents
United States Patent and Trademark Office
P.O. Box 1450
Alexandria, VA 22313-1450
www.uspto.gov

BIRCH STEWART KOLASCH & BIRCH
PO BOX 747
FALLS CHURCH, VA 22040-0747

COPY MAILED
SEP 0 2 2004
OFFICE OF PETITIONS

In re Application of :
Harold G. Brown et al :
Application No. 09/880,907 :
Filed: June 15, 2001 :
Attorney Docket No. 2059-0106P :

ON PETITION

This is a decision on the petition under 37 CFR 1.313(c)(1-3), filed August 31, 2004, which is being treated under 37 CFR 1.313(c)(2) to withdraw the above-identified application from issue after payment of the issue fee.

The petition is **GRANTED**.

The above-identified application is withdrawn from issue for consideration of a submission under 37 CFR 1.114 (request for continued examination). See 37 CFR 1.313(c)(2).

Petitioner is advised that the issue fee paid on July 7, 2004 in the above-identified application cannot be refunded. If, however, the above-identified application is again allowed, petitioner may request that it be applied towards the issue fee required by the new Notice of Allowance.[1]

Telephone inquiries should be directed to Wan Laymon at (703) 306-5685.

This matter is being referred to Technology Center AU 1623 for processing of the request for continued examination under 37 CFR 1.114 and for consideration of the concurrently filed IDS.

Wan Laymon
Petitions Examiner
Office of Petitions
Office of the Deputy Commissioner
for Patent Examination Policy

---

[1] The request to apply the issue fee to the new Notice may be satisfied by completing and returning the new Issue Fee Transmittal Form PTOL-85(b), which includes the following language thereon: "Commissioner for Patents is requested to apply the Issue Fee and Publication Fee (if any) or re-apply any previously paid issue fee to the application identified above." Petitioner is advised that, whether a fee is indicated as being due or not, the Issue Fee Transmittal Form **must** be completed and timely submitted to avoid abandonment. Note the language in bold text on the first page of the Notice of Allowance and Fee(s) Due (PTOL-85).

UNITED STATES PATENT AND TRADEMARK OFFICE

Commissioner for Patents
United States Patent and Trademark Office
P.O. Box 1450
Alexandria, VA 22313-1450
www.uspto.gov

MAY - 9 2005

BIRCH STEWART KOLASCH & BIRCH
PO BOX 747
FALLS CHURCH VA 22040-0747

In re Application of Harold G. Brown Serial No.: 09/880,907 Filed: June 15, 2001 Attorney Docket No.: 2059-0106	: PETITION DECISION

This is a response to the petition under 37 CFR 1.59(b), filed March 28, 2005, to expunge confidential information from the above identified application.

Petitioner requests that documents submitted August 2, 2004, and July 31, 2003 as a Proprietary Information Disclosure Statements be expunged from the record. Petitioner states either: (A) that the information contains trade secret material, proprietary material and/or material that is subject to a protective order which has not been made public; or (B) that the information submitted was unintentionally submitted and the failure to obtain its return would cause irreparable harm to the party who submitted the information or to the party in interest on whose behalf the information was submitted, and the information has not otherwise been made public. The petition fee set forth in 37 CFR 1.17(g) has been paid.

This application has been allowed and the examiner by allowing the application has determined that the documents submitted do not affect patentability of the application.

The petition is **GRANTED.** The expunged documents are returned herewith.

Should there be any questions with respect to this decision, please contact William R. Dixon, Jr., by mail addressed to: Director, Technology Center 1600, PO BOX 1450, ALEXANDRIA, VA 22313-1450, or by telephone at 571-272-0519 or by facsimile transmission at 571-273-8300.

Bruce M. Kisliuk
Director, Technology Center 1600

UNITED STATES PATENT AND TRADEMARK OFFICE

Commissioner for Patents
United States Patent and Trademark Office
P.O. Box 1450
Alexandria, VA 22313-1450
www.uspto.gov

JJGJR.: 05-06

Paper No:__

COPY MAILED
JUN 12 2006
OFFICE OF PETITIONS

JAMES C. WRAY
SUITE 300
1493 CHAIN BRIDGE ROAD
MCLEAN VA 22101

In re Application of	:	
Pandelisev	:	DECISION
Application No. 09/880,943	:	
Filing Date: 15 June, 2001	:	
Attorney Docket No.: PHOENIX SCIENTIFIC	:	

This is a decision on the petition filed on 22 December, 2005, as a request for withdrawal of the holding of abandonment under 37 C.F.R. §1.181.

For the reasons set forth below, the petition as considered under 37 C.F.R. §1.181 is **GRANTED**.

BACKGROUND

The record reflects that:

- Petitioner failed to reply timely and properly to the non-final Office action mailed on 4 May, 2005, with reply due absent an extension of time on or before 4 August, 2005;
- the application went abandoned by operation of law after midnight 4 August, 2005;
- the Office mailed the Notice of Abandonment on 19 December, 2005;
- on 22 December, 2005, Petitioner filed the instant petition and alleged the timely filing of a reply in the form of an amendment filed over a 2 September, 2005, certificate of

mailing, and provided a copy thereof, with a portion of a date stamped ("SEPT 06 2005") receipt card (see: MPEP §503[1]) evidencing not only receipt by the Office but damage in transmittal with the U.S. Postal Service (USPS) and correspondence from the USPS evidencing same.

STATUTES, REGULATIONS AND ANALYSIS

Congress has authorized the Commissioner to "revive an application if the delay is shown to the satisfaction of the Commissioner to have been "unavoidable." 35 U.S.C. §133 (1994).[2]

The regulations at 37 C.F.R. §1.137(a) and (b) set forth the requirements for a petitioner to revive

---

[1] MPEP §503 provides in pertinent part:

§503 Application Number and Filing Receipt

* * *

A return postcard should be attached to *each* patent application for which a receipt is desired. It is important that the return postcard itemize all of the components of the application. If the postcard does not itemize each of the components of the application, it will not serve as evidence that any component which was not itemized was received by the United States Patent and Trademark Office (USPTO). It should be recognized that the identification of an application by application number does not necessarily signify that the USPTO has accepted the application as complete (37 C.F.R. §1.53(a)).

* * *

RETURN POSTCARD

If a receipt of any item (e.g., paper or fee) filed in the USPTO is desired, it may be obtained by enclosing with the paper a self-addressed postcard specifically identifying the item. The USPTO will stamp the receipt date on the postcard and place it in the outgoing mail. A postcard receipt which itemizes and properly identifies the items which are being filed serves as *prima facie* evidence of receipt in the USPTO of all the items listed thereon on the date stamped thereon by the USPTO.

The identifying data on the postcard should be so complete as to clearly identify the item for which receipt is requested. For example, the postcard should identify the applicant's name, application number (if known), confirmation number (if known), filing date, interference number, title of the invention, etc. The postcard should also identify the type of paper being filed, e.g., new application, affidavit, amendment, notice of appeal, appeal brief, drawings, fees, motions, supplemental oath or declaration, petition, etc., and the number of pages being submitted. If a new application is being filed, all parts of the application being submitted should be separately listed on the postcard, e.g., the number of pages of specification (including written description, claims and abstract), number of claims, number of sheets of drawings, number of pages of oath/declaration, number of pages of cover sheet (provisional application).

The postcard receipt will not serve as *prima facie* evidence of receipt of any item which is not adequately itemized on the postcard. For example, merely listing on the postcard "a complete application" or "patent application" will not serve as a proper receipt for each of the required components of an application (e.g., specification (including claims), drawings (if necessary), oath or declaration and the application filing fee) or missing portions (e.g., pages, sheets of drawings) of an application if one of the components or portion of a component is found to be missing by the USPTO. Each separate component should be specifically and properly itemized on the postcard. Furthermore, merely incorporating by reference in the postcard receipt, the items listed in a transmittal letter will not serve as *prima facie* evidence of receipt of those items.

The person receiving the item(s) in the USPTO will check the listing on the postcard against the item(s) being filed to be sure they are properly identified and that all the items listed on the postcard are presently being submitted to the USPTO. If any of the items listed on the postcard are not being submitted to the USPTO, those items will be crossed off and the post-card initialed by the person receiving the items. Upon return of a postcard receipt from the USPTO, the postcard receipt should be promptly reviewed by the person who filed the items to ensure that every item specifically denoted on the postcard was received by the USPTO. If the postcard receipt has been annotated to indicate that a particular item denoted on the postcard was not received by the USPTO, the postcard receipt will not serve as *prima facie* evidence of receipt of that item in the USPTO. (Emphasis supplied.)

[2] 35 U.S.C. §133 provides:

35 U.S.C. §133 Time for prosecuting application.

Upon failure of the applicant to prosecute the application within six months after any action therein, of which notice has been given or mailed to the applicant, or within such shorter time, not less than thirty days, as fixed by the Commissioner in such action, the application shall be regarded as abandoned by the parties thereto, unless it be shown to the satisfaction of the Commissioner that such delay was unavoidable.

a previously unavoidably or unintentionally, respectively, abandoned application under this congressional grant of authority. The language of 35 U.S.C. §133 and 37 C.F.R. §1.137(a) is clear, unambiguous, and without qualification: the delay in tendering the reply to the outstanding Office action, as well as filing the first petition seeking revival, must have been unavoidable for the reply now to be accepted on petition.[3]

Delays in responding properly raise the question whether delays are unavoidable.[4] Where there is a question whether the delay was unavoidable, Petitioners must meet the burden of establishing that the delay was unavoidable within the meaning of 35 U.S.C. §133 and 37 C.F.R. §1.137(a).[5] And the Petitioner must be diligent in attending to the matter.[6] Failure to do so does not constitute the care required under Pratt, and so cannot satisfy the test for diligence and due care.

(By contrast, unintentional delays are those that do not satisfy the very strict statutory and regulatory requirements of unavoidable delay, and also, by definition, are not intentional.[7]))

Allegations as to the Request to
Withdraw the Holding of Abandonment

The courts have determined the construct for properly supporting a petition seeking withdrawal of a holding of abandonment.[8]

Petitioner appears as of this writing to have satisfied the showing requirements described above.

CONCLUSION

Because it appears that Petitioner has satisfied the burdens set forth in Delgar v. Schulyer, the

---

[3] Therefore, by example, an unavoidable delay in the payment of the Filing Fee might occur if a reply is shipped by the US Postal Service, but due to catastrophic accident, the delivery is not made.

[4] See: *Changes to Patent Practice and Procedure*; *Final Rule Notice*, 62 *Fed. Reg.* at 53158-59 (October 10, 1997), 1203 *Off. Gaz. Pat. Office* at 86-87 (October 21, 1997).

[5] See: In re Application of G, 11 USPQ2d 1378, 1380 (Comm'r Pats. 1989).

[6] See: Diligence in Filing Petitions to Revive and Petitions to Withdraw the Holding of Abandonment, 1124 Off. Gaz. Pat. Office 33 (March 19, 1991). It was and is Petitioner's burden to exercise diligence in seeking either to have the holding of abandonment withdrawn or the application revived. See 1124 Off. Gaz. Pat. Office supra.

[7] Therefore, by example, an unintentional delay in the reply might occur if the reply and transmittal form are to be prepared for shipment by the US Postal Service, but other pressing matters distract one's attention and the mail is not timely deposited for shipment.

[8] See: Delgar v. Schulyer, 172 USPQ 513 (D.D.C. 1971).

petition as considered under 37 C.F.R. §1.181 hereby is **granted**, the 19 December, 2005, Notice of Abandonment is **vacated**.

The instant application is released to Technology Center 1700 for further processing in due course.

Telephone inquiries concerning this decision may be directed to the undersigned at (571) 272-3214.

John J. Gillon, Jr.
Senior Attorney
Office of Petitions

UNITED STATES PATENT AND TRADEMARK OFFICE

Commissioner for Patents
United States Patent and Trademark Office
P.O. Box 1450
Alexandria, VA 22313-1450
www.uspto.gov

James C. Wray
Suite 300
1493 Chain Bridge Road
McLean, VA 22101

COPY MAILED

DEC 1 2 2007

OFFICE OF PETITIONS

In re Application of
Kiril A. Pandelisev
Application No. 09/880,943
Filed: June 15, 2001
Attorney Docket No. Phoenix Scientific

DECISION ON PETITION
TO WITHDRAW
FROM RECORD

This is a decision on the Requests to Withdraw as attorney or agent of record under 37 C.F.R. § 1.36(b), filed December 6, 2006 and February 8, 2007.

The request is **NOT APPROVED** as moot.

A review of the file record indicates that the power of attorney to James Wray and all attorneys/agents of record has been revoked by the assignee of the patent application on August 28, 2007. Accordingly, the request to withdraw under 37 C.F.R. § 1.36(b) is moot.

All future communications from the Office will continue to be directed to the below-listed address until otherwise notified by applicant.

Telephone inquires concerning this decision should be directed to Kimberly Inabinet at 571-272- 4618.

Kimberly Inabinet
Petitions Examiner
Office of Petitions

cc: Cermak Kenealy & Vaidya, LLP
515 East Braddock Road, Suite B
Alexandria, VA 22314

UNITED STATES PATENT AND TRADEMARK OFFICE

Commissioner for Patents
United States Patent and Trademark Office
P.O. Box 1450
Alexandria, VA 22313-1450
www.uspto.gov

COPY MAILED

JAN 0 4 2008

OFFICE OF PETITIONS

James C. Wray
Suite 300
1493 Chain Bridge Road
McLean, VA 22101

In re Application of	:	
Kiril A. Pandelisev	:	
Application No. 09/880,943	:	DECISION ON PETITION
Filed: June 15, 2001	:	TO WITHDRAW
Attorney Docket No.	:	FROM RECORD
	:	

This is a decision on the Request to Withdraw as attorney or agent of record under 37 C.F.R. § 1.36(b), filed February 8, 2007.

The request is **NOT APPROVED** as moot.

A review of the file record indicates that the power of attorney to James Wray and all attorneys/agents of record has been revoked by the assignee of the patent application on August 28, 2007. Accordingly, the request to withdraw under 37 C.F.R. § 1.36(b) is moot.

All future communications from the Office will continue to be directed to the below-listed address until otherwise notified by applicant.

Telephone inquires concerning this decision should be directed to Kimberly Inabinet at 571-272- 4618.

Kimberly Inabinet
Petitions Examiner
Office of Petitions

cc: Kiril A. Pandelisev
4952 East Encanto Street
Mesa, AZ 85205

UNITED STATES PATENT AND TRADEMARK OFFICE

COMMISIONER FOR PATENTS
UNITED STATES PATENT AND TRADEMARK OFFICE
P.O. BOX 1450
ALEXANDRIA, VA 1450-22313
www.uspto.gov

Paper No. 9

Ms. Shannon K. Reeser
Varieties International
P.O. Box 753
Lafayette, OR 97127

COPY MAILED

JUL 1 6 2003

OFFICE OF PETITIONS

In re Application of	:	
Guennadi Eremin	:	DECISION GRANTING
Application No. 09/880,950	:	PETITION
Filed: January 11, 2002	:	
Attorney Docket No. 4194-030270	:	

This is a decision on the petition filed May 20, 2003, requesting that the above-identified application be accorded the filing date of January 11, 2002, the date omitted drawings were filed with the United States Patent and Trademark (Office).

On January 11, 2002, applicant deposited the above-identified application. However, on August 17, 2001, the Office of Initial Patent Examination mailed a "Notice Of Incomplete Application," requiring drawings of applicant's invention and stating that the filing date would be the date of receipt of the omitted drawings.

In response, on January 11, 2002, applicant submitted photographs of the claimed plant and a description thereof, as well as an authorization to charge a credit card for additional fees.

On January 23, 2003, the Office of Initial Patent Examination mailed a Notice of Abandonment for failure to reply in a timely manner to the Notice of Incomplete. Additionally, the Office mailed a Notice of Termination of Proceedings, indicating that the application did not meet the requirements of 37 CFR 1.53 to be entitled to a filing date, and that the filing error specified in the Notice of August 17, 2001, was not timely corrected. The Notice of Termination of Proceedings further indicated that the $320.00 fee submitted with the application, less the $130.00 handling fee, would be refunded.

In response, on May 20, 2003, applicant submitted the present petition and a new declaration. Applicant states that all requirements for a filing date were met on January 11, 2002, and request that the above-identified application be accorded a filing date of January 11, 2002.

Initially, the Office notes that when the Notice of Abandonment was mailed to applicant the present application had not been accorded a filing date. The Office further notes that failure to respond timely to a Notice of Incomplete Nonprovisional Application - No Filing Date Granted cannot result in abandonment

of the application. Therefore, the Notice of Abandonment was sent in error and is hereby vacated.

A review of the record indicates that applicant submitted photographs of the plant on January 11, 2002. Accordingly, the application was complete on January 11, 2002, and was entitled to a filing date.

Therefore, the petition is granted.

The current filing fee for a plant application is $260.00. The finance records indicate that the Office refunded the application fee minus the $130.00 handling fee. Accordingly, the difference of $130.00 will be charged to Deposit Account No. 23-0650. No petition fee is necessary.

The application is being returned to the Office of Initial Patent Examination to accord a filing date of January 11, 2002, using the photographs submitted on that date, and for the mailing of a corrected filing receipt.

Any inquiries related to this decision should be directed to the undersigned at (703) 306-5589.

Christina Tartera Donnell

Christina Tartera Donnell
Senior Petitions Attorney
Office of Petitions

UNITED STATES PATENT AND TRADEMARK OFFICE

COMMISIONER FOR PATENTS
UNITED STATES PATENT AND TRADEMARK OFFICE
P.O. BOX 1450
ALEXANDRIA, VA 1450-22313
www.uspto.gov

Paper No. 9

Ms. Shannon K. Reeser
Varieties International
P.O. Box 753
Lafayette, OR 97127

COPY MAILED

JUL 1 6 2003

OFFICE OF PETITIONS

In re Application of	:	
Guennadi Eremin	:	DECISION GRANTING
Application No. 09/880,951	:	PETITION
Filed: January 11, 2002	:	
For: Prunus Plant Named "VSV-1"	:	

This is a decision on the petition filed May 20, 2003, requesting that the above-identified application be accorded the filing date of January 11, 2002, the date omitted drawings were filed with the United States Patent and Trademark (Office).

On January 11, 2002, applicant deposited the above-identified application. However, on August 16, 2001, the Office of Initial Patent Examination mailed a "Notice Of Incomplete Application," requiring drawings of applicant's invention and stating that the filing date would be the date of receipt of the omitted drawings.

In response, on January 11, 2002, applicant submitted photographs of the claimed plant and a description thereof, as well as an authorization to charge a credit card for additional fees.

On January 22, 2003, the Office of Initial Patent Examination mailed a Notice of Abandonment for failure to reply in a timely manner to the Notice of Incomplete. Additionally, the Office mailed a Notice of Termination of Proceedings, indicating that the application did not meet the requirements of 37 CFR 1.53 to be entitled to a filing date, and that the filing error specified in the Notice of August 16, 2001, was not timely corrected. The Notice of Termination of Proceedings further indicated that the $320.00 fee submitted with the application, less the $130.00 handling fee, would be refunded.

In response, on May 20, 2003, applicant submitted the present petition and a new declaration. Applicant states that all requirements for a filing date were met on January 11, 2002, and request that the above-identified application be accorded a filing date of January 11, 2002.

Initially, the Office notes that when the Notice of Abandonment was mailed to applicant the present application had not been accorded a filing date. The Office further notes that failure to respond timely to a Notice of Incomplete Nonprovisional Application - No Filing Date Granted cannot result in abandonment of the application. Therefore, the Notice of Abandonment was sent in error and is hereby vacated.

A review of the record indicates that applicant submitted photographs of the plant on January 11, 2002. Accordingly, the application was complete on January 11, 2002, and was entitled to a filing date.

Therefore, the petition is granted.

The current filing fee for a plant application is $260.00. The finance records indicate that the Office refunded the application fee minus the $130.00 handling fee. Accordingly, the difference of $130.00 will be charged to Deposit Account No. 23-0650. No petition fee is necessary.

The application is being returned to the Office of Initial Patent Examination to accord a filing date of January 11, 2002, using the photographs submitted on that date, and for the mailing of a corrected filing receipt.

Any inquiries related to this decision should be directed to the undersigned at (703) 306-5589.

Christina Tartera Donnell

Christina Tartera Donnell
Senior Petitions Attorney
Office of Petitions

UNITED STATES PATENT AND TRADEMARK OFFICE

COMMISIONER FOR PATENTS
UNITED STATES PATENT AND TRADEMARK OFFICE
P.O. BOX 1450
ALEXANDRIA, VA 1450-22313
www.uspto.gov

Paper No. 9

Ms. Shannon K. Reeser
Varieties International
P.O. Box 753
Lafayette, OR 97127

COPY MAILED

JUL 1 8 2003

OFFICE OF PETITIONS

In re Application of	:	
Guennadi Eremin	:	DECISION GRANTING
Application No. 09/880,952	:	PETITION
Filed: January 11, 2002	:	
Attorney Docket No. 4194-030268	:	

This is a decision on the petition filed May 20, 2003, requesting that the above-identified application be accorded the filing date of January 11, 2002, the date omitted drawings were filed with the United States Patent and Trademark (Office).

On January 11, 2002, applicant deposited the above-identified application. However, on August 17, 2001, the Office of Initial Patent Examination mailed a "Notice Of Incomplete Application," requiring drawings of applicant's invention and stating that the filing date would be the date of receipt of the omitted drawings.

In response, on January 11, 2002, applicant submitted photographs of the claimed plant and a description thereof, as well as an authorization to charge a credit card for additional fees.

On January 23, 2003, the Office of Initial Patent Examination mailed a Notice of Abandonment for failure to reply in a timely manner to the Notice of Incomplete. Additionally, the Office mailed a Notice of Termination of Proceedings, indicating that the application did not meet the requirements of 37 CFR 1.53 to be entitled to a filing date, and that the filing error specified in the Notice of August 17, 2001, was not timely corrected. The Notice of Termination of Proceedings further indicated that the $320.00 fee submitted with the application, less the $130.00 handling fee, would be refunded.

In response, on May 20, 2003, applicant submitted the present petition and a new declaration. Applicant states that all requirements for a filing date were met on January 11, 2002, and request that the above-identified application be accorded a filing date of January 11, 2002.

Initially, the Office notes that when the Notice of Abandonment was mailed to applicant the present application had not been accorded a filing date. The Office further notes that failure to respond timely to a Notice of Incomplete Nonprovisional Application - No Filing Date Granted cannot result in abandonment

of the application. Therefore, the Notice of Abandonment was sent in error and is hereby vacated.

A review of the record indicates that applicant submitted photographs of the plant on January 11, 2002. Accordingly, the application was complete on January 11, 2002, and was entitled to a filing date.

Therefore, the petition is granted.

The current filing fee for a plant application is $260.00. The finance records indicate that the Office refunded the application fee minus the $130.00 handling fee. Accordingly, the difference of $130.00 will be charged to Deposit Account No. 23-0650. No petition fee is necessary.

The application is being returned to the Office of Initial Patent Examination to accord a filing date of January 11, 2002, using the photographs submitted on that date, and for the mailing of a corrected filing receipt.

Any inquiries related to this decision should be directed to the undersigned at (703) 306-5589.

Christina Tartera Donnell

Christina Tartera Donnell
Senior Petitions Attorney
Office of Petitions

UNITED STATES PATENT AND TRADEMARK OFFICE

COMMISIONER FOR PATENTS
UNITED STATES PATENT AND TRADEMARK OFFICE
P.O. BOX 1450
ALEXANDRIA, VA 1450-22313
www.uspto.gov

Paper No. 9

Ms. Shannon K. Reeser
Varieties International
P.O. Box 753
Lafayette, OR 97127

COPY MAILED

JUL 1 6 2003

OFFICE OF PETITIONS

In re Application of	:	
Guennadi Eremin	:	DECISION GRANTING
Application No. 09/880,953	:	PETITION
Filed: January 11, 2002	:	
Attorney Docket No. 4194-030267	:	

This is a decision on the petition filed May 20, 2003, requesting that the above-identified application be accorded the filing date of January 11, 2002, the date omitted drawings were filed with the United States Patent and Trademark (Office).

On January 11, 2002, applicant deposited the above-identified application. However, on August 17, 2001, the Office of Initial Patent Examination mailed a "Notice Of Incomplete Application," requiring drawings of applicant's invention and stating that the filing date would be the date of receipt of the omitted drawings.

In response, on January 11, 2002, applicant submitted photographs of the claimed plant and a description thereof, as well as an authorization to charge a credit card for additional fees.

On January 22, 2003, the Office of Initial Patent Examination mailed a Notice of Abandonment for failure to reply in a timely manner to the Notice of Incomplete. Additionally, the Office mailed a Notice of Termination of Proceedings, indicating that the application did not meet the requirements of 37 CFR 1.53 to be entitled to a filing date, and that the filing error specified in the Notice of August 17, 2001, was not timely corrected. The Notice of Termination of Proceedings further indicated that the $320.00 fee submitted with the application, less the $130.00 handling fee, would be refunded.

In response, on May 20, 2003, applicant submitted the present petition and a new declaration. Applicant states that all requirements for a filing date were met on January 11, 2002, and request that the above-identified application be accorded a filing date of January 11, 2002.

Initially, the Office notes that when the Notice of Abandonment was mailed to applicant the present application had not been accorded a filing date. The Office further notes that failure to respond timely to a Notice of Incomplete Nonprovisional

Application - No Filing Date Granted cannot result in abandonment of the application. Therefore, the Notice of Abandonment was sent in error and is hereby vacated.

A review of the record indicates that applicant submitted photographs of the plant on January 11, 2002. Accordingly, the application was complete on January 11, 2002, and was entitled to a filing date.

Therefore, the petition is granted.

The current filing fee for a plant application is $260.00. The finance records indicate that the Office refunded the application fee minus the $130.00 handling fee. Accordingly, the difference of $130.00 will be charged to Deposit Account No. 23-0650. No petition fee is necessary.

The application is being returned to the Office of Initial Patent Examination to accord a filing date of January 11, 2002, using the photographs submitted on that date, and for the mailing of a corrected filing receipt.

Any inquiries related to this decision should be directed to the undersigned at (703) 306-5589.

Christina Tartera Donnell

Christina Tartera Donnell
Senior Petitions Attorney
Office of Petitions

UNITED STATES PATENT AND TRADEMARK OFFICE

COMMISSIONER FOR PATENTS
UNITED STATES PATENT AND TRADEMARK OFFICE
P.O. BOX 1450
ALEXANDRIA, VA 22313-1450
www.uspto.gov

Paper No. 21

WILLIAMS MORGAN & AMERSON PC
10333 RICHMOND
SUITE 1100
HOUSTON TX 77042

COPY MAILED

DEC 0 8 2003

OFFICE OF PETITIONS

In re Application of Sonderman, et al. Application No. 09/880,975 Filed: October 8, 2002 Attorney Docket No. 2000.045300	: : : : :	DECISION ON PETITION

This is a decision on the petition to revive under 37 CFR 1.137(b), pursuant to 37 CFR 1.137(f), filed November 5, 2003 (Certificate of Mailing dated November 3, 2003).

The petition is **GRANTED**.

Petitioner states that the instant application is the subject of a PCT international application filed on April 2, 2002. However, the US Patent and Trademark Office was unintentionally not notified of this filing within 45 days subsequent to the filing of the PCT application.

In view of the above, this application became abandoned pursuant to 35 USC 122(b)(2)(B)(iii) and 37 CFR 1.213(c) for failure to timely notify the Office of the filing of an application in a foreign country, or under a multilateral international agreement, that requires publication of applications 18 months after filing.

A petition under 37 CFR 1.137(f) must be accompanied by:

(1) the reply, which is met by the notification of such filing in a foreign country or under a multinational treaty;

(2) the petition fee as set forth in 37 CFR 1.17(m); and

(3) a statement that the entire delay in filing the required reply from the due date of the reply until the filing of a grantable petition was unintentional.

The instant petition has been found to be in compliance with 37 CFR 1.137(f). Accordingly, the failure to timely notify the Office of a foreign or international filing within 45 days after the date of filing of such foreign or international application as provided by 35 USC 122(b)(2)(B)(iii) and 37 CFR 1.213(c) is accepted as having been unintentionally delayed.

The previous Request and Certification under 35 USC 122(b)(2)(B)(i) has been rescinded.

The file is being forwarded to Technology Center 2800, Group Art Unit 2813, to await for applicant's response to the final Office action mailed November 24, 2003.

Telephone inquiries regarding this decision should be directed to the undersigned at (703) 305-0272.

Cliff Congo
Petitions Attorney
Office of Petitions

UNITED STATES
PATENT AND
TRADEMARK OFFICE

#16

UNDER SECRETARY OF COMMERCE FOR INTELLECTUAL PROPERTY
AND DIRECTOR OF THE UNITED STATES PATENT AND TRADEMARK OFFICE
WASHINGTON, D.C. 20231
WWW.USPTO.GOV

HELLER EHRMAN WHITE & MCAULIFFE LLP
4350 LA JOLLA VILLAGE DRIVE
7TH FLOOR
SAN DIEGO CA 92122-1246

In re Application of	:
Charles R. Cantor et al	:
Serial No.: 09/880,988	: PETITION DECISION
Filed: June 13, 2001	:
Attorney Docket No.: 25491-2408	:

This is in response to applicants' petition under 37 CFR 1.181, filed December 4, 2002, requesting withdrawal of Finality of the last Office action.

A review of the file history shows that this application was filed on June 13, 2001, and was amended by a preliminary amendment on September 6, 2001, amending portions of the specification, canceling claim 9, and amending claims 4, 8, 17, 24, 36 and 39-40. In a first Office action, mailed January 30, 2002, the examiner divided the claims into three groups for purposes of restriction. Applicants replied by electing Group I, without traverse, claims 1-8, 10-20 and 25-45. The examiner in the next Office action, mailed April 3, 2002, set forth a rejection of claims 4 and 8 under 35 U.S.C. 112, second paragraph, for indefiniteness. The examiner also rejected claims 1-3, 5-7, 10-12 and 25-27 under 35 U.S.C. 102(b) as anticipated by Brennan. Claims 1-8, 10-12 and 25-27 were rejected under 35 U.S.C. 103(a) as unpatentable over Brennan in view of Schultz. Claims 1-3, 5-7, 10-12 and 25-45 were rejected under 35 U.S.C. 103(a) as unpatentable over Brennan in view of Shuber. Claims 1-3, 5-7, 10-20 and 25-27 were further rejected under 35 U.S.C. 103(a) over Brennan in view of Canard et al. Applicants replied on September 10, 2002, amending claims 4, 6, 17, 27-28, 31, 33, 36 and 42. Each of the rejections of record was addressed in the arguments.

The examiner mailed a Final Office action to applicants on October 4, 2002, in which claims 1-8, 10-20 and 25-27 were rejected under 35 U.S.C. 103(a) as unpatentable over Brennan in view of Canard et al and Schultz. Claims 28-45 were rejected under 35 U.S.C. 103(a) as unpatentable over Brennan in view of Canard et al, Schultz and Shuber. Responses to applicants' arguments were made and the action was made Final.

DISCUSSION

Applicants argue that the Office action is prematurely Final since two new rejections were set forth which were not necessitated by applicants' amendments. Applicants argue that the rejections set forth in the Final Office action use the same references, but combine them in a different manner and thus must be considered new rejections.

A review of the rejections made in the Final Office action shows that the rejections set forth are different from those set forth in the previous Office action. Claims 1-8, 10-20 and 25-27 are now rejected over three references, Brennan et al, Canard and Schultz, whereas they were previously rejected only over Brennan in view of Schultz. Although claims 4 and 8 are now included in this rejection when they were not previously rejected over prior art, they are both dependent claims and must be considered with the independent claim. In a similar manner, Claims 28-45 are now rejected over Brennan, combined with Schultz, Shuber and Canard et al whereas they were previously rejected over Brennan in view of Shuber. No examiner reason is given for justifying the change of rejection basis which would support the making of the Office action Final. It is especially noted that the independent claims were not amended, only dependent claims.

DECISION

Applicants' petition is **GRANTED.** The Finality of the last Office action, mailed October 4, 2002, is withdrawn. The Office action, which appears to be a complete action, is not withdrawn.

Applicants remain under obligation to reply to the last Office action under 37 CFR 1.111 within the time period set therein or as may be extended under 37 CFR 1.136(a).

Should there be any questions with respect to this decision, please contact William R. Dixon, Jr., by mail addressed to: Director, Technology Center 1600, Washington, D.C. 20231, or by telephone at (703)308-3824 or by facsimile transmission at (703) 305-7230..

John Doll
Director, Technology Center 1600

OIPE JC32
JAN 3 0 2002
PATENT & TRADEMARK OFFICE

m.m

UNITED STATES PATENT AND TRADEMARK OFFICE

COMMISSIONER FOR PATENTS
UNITED STATES PATENT AND TRADEMARK OFFICE
WASHINGTON, D.C. 20231
www.uspto.gov

APPLICATION NUMBER	FILING/RECEIPT DATE	FIRST NAMED APPLICANT	ATTORNEY DOCKET NUMBER
09/881,012	06/13/2001	Edward I. Ginns	015280-248120US

CONFIRMATION NO. 8624

FORMALITIES LETTER

OC000000007182055

20350
TOWNSEND AND TOWNSEND AND CREW
TWO EMBARCADERO CENTER
EIGHTH FLOOR
SAN FRANCISCO, CA 94111-3834

Date Mailed: 12/11/2001

NOTICE TO COMPLY WITH REQUIREMENTS FOR PATENT APPLICATIONS CONTAINING NUCLEOTIDE SEQUENCE AND/OR AMINO ACID SEQUENCE DISCLOSURES

Applicant is given **TWO MONTHS FROM THE DATE OF THIS NOTICE** within which to file the items indicated below to avoid abandonment. Extensions of time may be obtained under the provisions of 37 CFR 1.136(a).

- The paper or compact disc copy of the "Sequence Listing" is not the same as the computer readable form of the "Sequence Listing" as required by 37 CFR 1.821(e). Applicant must provide a substitute paper or compact disc copy of the "Sequence Listing", as well as an amendment directing its entry into the application OR a substitute computer readable form (CRF) copy of the "Sequence Listing". These two items must be the same. Applicant must also provide a statement that the content of the sequence listing information recorded in computer readable form is identical to the written (on paper or compact disc) sequence listing and, where applicable, includes no new matter, as required by 37 CFR 1.821(e), 1.821(f), 1.821(g), 1.825(b), or 1.825(d). If the effective filing date is on or after September 8, 2000, see the final rulemaking notice published in the Federal Register at 65 FR 54604 (September 8, 2000) and 1238 OG 145 (September 19, 2000).

For questions regarding compliance to these requirements, please contact:

- **For Rules Interpretation, call (703) 308-4216**
- **To Purchase PatentIn Software, call (703) 306-2600**
- **For PatentIn Software Program Help, call (703) 306-4119 or e-mail at patin21help@uspto.gov or patin3help@uspto.gov**

A copy of this notice MUST be returned with the reply.

BJ

Customer Service Center
Initial Patent Examination Division (703) 308-1202
PART 2 - COPY TO BE RETURNED WITH RESPONSE

AA

SECTOR

Please type a plus sign (+) inside this box → [+]

PTO/SB/21 (08-00)
Approved for use through 10/31/2002. OMB 0651-0031
U.S. Patent and Trademark Office: U.S. DEPARTMENT OF COMMERCE

Under the Paperwork Reduction Act of 1995, no persons are required to respond to a collection of information unless it displays a valid OMB control number.

OIPE JC24 SEP 1 0 2001 PATENT & TRADEMARK OFFICE

TRANSMITTAL FORM

(to be used for all correspondence after initial filing)

Application Number	09/881,012
Filing Date	June 13, 2001
First Named Inventor	Ginns, Edward I.
Group Art Unit	1655
Examiner Name	Unassigned
Attorney Docket Number	015280248120

Total Number of Pages in This Submission

ENCLOSURES *(check all that apply)*

- [x] Fee Transmittal Form
  - [ ] Fee Attached
- [ ] Amendment / Response
  - [ ] After Final
  - [ ] Affidavits/declaration(s)
- [ ] Extension of Time Request
- [ ] Express Abandonment Request
- [ ] Information Disclosure Statement
- [ ] Certified Copy of Priority Document(s)
- [x] Response to Missing Parts/ Incomplete Application
  - [x] Response to Missing Parts under 37 CFR 1.52 or 1.53
- [ ] Assignment Papers *(for an Application)*
- [x] Drawing(s) – **Substitute Figs. 1-12B**
- [ ] Licensing-related Papers
- [ ] Petition Routing Slip (PTO/SB/69) and Accompanying Petition
- [ ] Petition to Convert to a Provisional Application
- [ ] Power of Attorney, Revocation Change of Correspondence Address
- [ ] Terminal Disclaimer
- [ ] Request for Refund
- [ ] CD, Number of CD(s)
- [ ] After Allowance Communication to Group
- [ ] Appeal Communication to Board of Appeals and Interferences
- [ ] Appeal Communication to Group *(Appeal Notice, Brief, Reply Brief)*
- [ ] Proprietary Information
- [ ] Status Letter
- [x] Other Enclosure(s) *(please identify below)*:
  - (1)-Sequence Listing Submission Statement
  - (2)-Sequence Listing paper copy pages 1-17
  - (3)-Communication and Preliminary Amendment from parent appln. 09/175,158
  - (4)-Communication (re atty. docket no.)
  - (5)-Formalities Letter, Part 2
  - (6)-Return Postcard

Remarks: The Commissioner is authorized to charge any additional fees to Deposit Account 20-1430.

SIGNATURE OF APPLICANT, ATTORNEY, OR AGENT

Firm and Individual name	Townsend and Townsend and Crew LLP Anna Gil — Reg No. 46,726
Signature	A. Gil
Date	September 4, 2001

CERTIFICATE OF MAILING

I hereby certify that this correspondence is being deposited with the United States Postal Service with sufficient postage as first class mail in an envelope addressed to: Assistant Commissioner for Patents, Washington, D.C. 20231 on this date: September 4, 2001

Typed or printed name	Malinda C. Dagit
Signature	Malinda Dagit — Date: 4 Sept. 2001

Burden Hour Statement: This form is estimated to take 0.2 hours to complete. Time will vary depending upon the needs of the individual case. Any comments on the amount of time you are required to complete this form should be send to the Chief Information Officer, U.S. Patent and Trademark Office, Washington, DC 20231. DO NOT SEND FEES OR COMPLETED FORMS TO THIS ADDRESS. SEND TO: Assistant Commissioner for Patents, Washington, DC 20231.

PTO/SB/17 (09-00)
Approved for [redacted]rough 10/31/2002. OMB 0651-0032
Patent and Trademark Offic[redacted].S. DEPARTMENT OF COMMERCE
Under the Paperwork Reduction Act of 1995, no persons are required to respond to a collection of information unless it displays a valid OMB control number.

FEE TRANSMITTAL for FY 2001

Patent fees are subject to annual revision.

OIPE JC34
SEP 1 0 2001
PATENT & TRADEMARK OFFICE

TOTAL AMOUNT OF PAYMENT ($) 1046

Complete if Known	
Application Number	09/881,012
Filing Date	June 13, 2001
First Named Inventor	Ginns, Edward I.
Examiner Name	Unassigned
Group Art Unit	1655
Attorney Docket No.	015280-248120US

METHOD OF PAYMENT

1. ☒ The Commissioner is hereby authorized to charge indicated fees and credit any over payments to:

Deposit Account Number: 20-1430

Deposit Account Name: Townsend and Townsend and Crew LLP

☒ Charge Any Additional Fee Required Under 37 CFR 1.16 and 1.17

☐ Applicant claims small entity status. See 37 CFR 1.27

2. ☐ **Payment Enclosed:**

☐ Check ☐ Credit card ☐ Money Order ☐ Other

FEE CALCULATION

1. BASIC FILING FEE

Large Fee Code	Large Entity Fee ($)	Small Fee Code	Small Entity Fee ($)	Fee Description	Fee Paid
101	710	201	355	Utility filing fee	710
106	320	206	160	Design filing fee	
107	490	207	245	Plant filing fee	
108	710	208	355	Reissue filing fee	
114	150	214	75	Provisional filing fee	

SUBTOTAL (1) ($)710

2. EXTRA CLAIM FEES

			Extra Claims		Fee from below		Fee Paid
Total Claims	27	-20** =	7	X	$18	=	$126
Independent Claims	4	-3** =	1	X	$80	=	$80
Multiple Dependent				X		=	

Large Fee Code	Large Entity Fee ($)	Small Fee Code	Small Entity Fee ($)	Fee Description
103	18	203	9	Claims in excess of 20
102	80	202	40	Independent claims in excess of 3
104	270	204	135	*Multiple dependent claim, if not paid*
109	80	209	40	** Reissue independent claims over original patent
110	18	210	9	** Reissue claims in excess of 20 and over original patent

SUBTOTAL (2) ($)206

**or number previously paid, if greater; For Reissues, see above

FEE CALCULATION (continued)

3. ADDITIONAL FEES

Large Fee Code	Large Entity Fee ($)	Small Fee Code	Small Entity Fee ($)	Fee Description	Fee Paid
105	130	205	65	Surcharge - late filing fee or oath	130
127	50	227	25	Surcharge - late provisional filing fee or cover sheet.	
139	130	139	130	Non-English specification	
147	2,520	147	2,520	For filing a request for reexamination	
112	920*	112	920*	Requesting publication of SIR prior to Examiner action	
113	1,840*	113	1,840*	Requesting publication of SIR after Examiner action	
115	110	215	55	Extension for reply within first month	
116	390	216	195	Extension for reply within second month	
117	890	217	445	Extension for reply within third month	
118	1,390	218	695	Extension for reply within fourth month	
128	1,890	228	945	Extension for reply within fifth month	
119	310	219	155	Notice of Appeal	
120	310	220	155	Filing a brief in support of an appeal	
121	270	221	135	Request for oral hearing	
138	1,510	138	1,510	Petition to institute a public use proceeding	
140	110	240	55	Petition to revive – unavoidable	
141	1,240	241	620	Petition to revive – unintentional	
142	1,240	242	620	Utility issue fee (or reissue)	
143	440	243	220	Design issue fee	
144	600	244	300	Plant issue fee	
122	130	122	130	Petitions to the Commissioner	
123	50	123	50	Petitions related to provisional applications	
126	180	126	180	Submission of Information Disclosure Stmt	
581	40	581	40	Recording each patent assignment per property (times number of properties)	
146	710	246	355	Filing a submission after final rejection (37 CFR § 1.129(a))	
149	710	249	355	For each additional invention to be examined (37 CFR § 1.129(b))	
179	710	279	355	Request for Continued Examination (RCE)	
169	900	169	900	Request for expedited examination of a design application	
Other fee (specify)					

The Commissioner is authorized to charge any additional fees to the above noted Deposit Account.

*Reduced by Basic Filing Fee Paid

SUBTOTAL (3) ($)130

SUBMITTED BY

Complete *(if applicable)*

Name (Print/Type)	Anna Gil	*Registration No. (Attorney/Agent)*	46,726	*Telephone*	415-576-0200
Signature				*Date* 9/4/01	September 4, 2001

WARNING: Information on this form may become public. Credit card information should not be included on this form. Provide credit card information and authorization on PTO-2038.

Burden Hour Statement: This form is estimated to take 0.2 hours to complete. Time will vary depending upon the needs of the individual case. Any comments on the amount of time you are required to complete this form should be sent to the Chief Information Officer, Patent and Trademark Office, Washington, DC 20231. DO NOT SEND FEES OR COMPLETED FORMS TO THIS ADDRESS. SEND TO: Assistant Commissioner for Patents, Washington, DC 20231. SF 1266265 v1

OIPE JC34
SEP 1 0 2001
PATENT & TRADEMARK OFFICE

UNITED STATES PATENT AND TRADEMARK OFFICE

COMMISSIONER FOR PATENTS
UNITED STATES PATENT AND TRADEMARK OFFICE
WASHINGTON, D.C. 20231
www.uspto.gov

APPLICATION NUMBER	FILING/RECEIPT DATE	FIRST NAMED APPLICANT	ATTORNEY DOCKET NUMBER
09/881,012	06/13/2001	Edward I. Ginns	015280-248114US

CONFIRMATION NO. 8624

FORMALITIES LETTER

OC000000006256110

20350
TOWNSEND AND TOWNSEND AND CREW
TWO EMBARCADERO CENTER
EIGHTH FLOOR
SAN FRANCISCO, CA 94111-3834

Date Mailed: 07/03/2001

NOTICE TO FILE MISSING PARTS OF NONPROVISIONAL APPLICATION

09/13/2001 BNGUYEN1 00000034 201430 09881012

01 FC:101 710.00 CH
02 FC:102 80.00 CH
03 FC:103 126.00 CH
04 FC:105 130.00 CH

FILED UNDER 37 CFR 1.53(b)

Filing Date Granted

An application number and filing date have been accorded to this application. The item(s) indicated below, however, are missing. Applicant is given **TWO MONTHS** from the date of this Notice within which to file all required items and pay any fees required below to avoid abandonment. Extensions of time may be obtained by filing a petition accompanied by the extension fee under the provisions of 37 CFR 1.136(a).

- The statutory basic filing fee is missing.
  Applicant must submit $ **710** *to complete the basic filing fee and/or file a small entity statement claiming such status (37 CFR 1.27).*
- Total additional claim fee(s) for this application is $206.
  - $**126** for **7** total claims over 20.
  - $**80** for **1** independent claims over 3 .
- To avoid abandonment, a late filing fee or oath or declaration surcharge as set forth in 37 CFR 1.16(e) of $130 for a non-small entity, must be submitted with the missing items identified in this letter.
- **The balance due by applicant is $ 1046.**

The application is informal since it does not comply with the regulations for the reason(s) indicated below.

The required item(s) identified below must be timely submitted to avoid abandonment:

- Substitute drawings in compliance with 37 CFR 1.84 because:
  - drawing sheets do not have the appropriate margin(s) (see 37 CFR 1.84(g)). Each sheet must include a top margin of at least 2.5 cm. (1 inch), a left side margin of at least 2.5 cm. (1 inch), a right side margin of at least 1.5 cm. (5/8 inch), and a bottom margin of at least 1.0 cm. (3/8 inch);
- This application does not contain a statement that the content of the sequence listing information recorded in computer readable form is identical to the written (on paper or compact disc) sequence listing and, where applicable, includes no new matter, as required by 37 CFR 1.821(e), 1.821(f), 1.821

(g), 1.825(b), or 1.825(d). Applicant must provide such statement. If the effective filing date is on or after September 8, 2000, see the final rulemaking notice published in the Federal Register at 65 FR 54604 (September 8, 2000) and 1238 OG 145 (September 19, 2000).

- A copy of the "Sequence Listing" in computer readable form has not been submitted as required by 37 C.F.R. 1.821(e). If the effective filing date is on or after September 8, 2000, see the final rulemaking notice published in the Federal Register at 65 FR 54604 (September 8, 2000) and 1238 OG 145 (September 19, 2000). Applicant must provide an initial computer readable form (CRF) copy of the "Sequence Listing" and a statement that the content of the sequence listing information recorded in computer readable form is identical to the written (on paper or compact disc) sequence listing and, where applicable, includes no new matter, as required by 37 CFR 1.821(e), 1.821(f), 1.821(g), 1.825(b), or 1.825(d). If applicant desires the sequence listing in the instant application to be identical with that of another application on file in the U.S. Patent and Trademark Office, such request in accordance with 37 CFR 1.821(e) may be submitted in lieu of a new CRF.

For questions regarding compliance to these requirements, please contact:

- **For Rules Interpretation, call (703) 308-4216**
- **To Purchase PatentIn Software, call (703) 306-2600**
- **For PatentIn Software Program Help, call (703) 306-4119 or e-mail at patin21help@uspto.gov or patin3help@uspto.gov**

A copy of this notice MUST be returned with the reply.

Customer Service Center
Initial Patent Examination Division (703) 308-1202

PART 2 - COPY TO BE RETURNED WITH RESPONSE

1634

OIPE JC139 DEC 2 3 2002 PATENT & TRADEMARK OFFICE

IN THE UNITED STATES PATENT AND TRADEMARK OFFICE

In re application of:

E. GINNS *et al.*

Application No. 09/881,012
Confirmation No. 8624

Filed: June 13, 2001

For: SUSCEPTIBILITY AND RESISTANCE GENES FOR BIPOLAR AFFECTIVE DISORDER

Art Unit: 1655

Examiner: Jeanne Anne GOLDBERG

Atty. Docket No. 39532-181808

Customer No.
26694
PATENT TRADEMARK OFFICE

RESPONSE TO OFFICE COMMUNICATION AND NOTICE TO COMPLY WITH REQUIREMENTS FOR PATENT APPLICATIONS CONTAINING NUCLEOTIDE SEQUENCE AND/OR AMINO ACID SEQUENCE DISLOSURES

BOX MISSING PARTS
Assistant Commissioner for Patents
Washington, D.C. 20231

RECEIVED
DEC 2 7 2002
TECH CENTER 1600/2900

Sir:

In response to the Notice to Comply mailed November 27, 2002, please enter the following amendments and consider the following remarks.

IN THE SPECIFICATION:

Please substitute the attached 8 pages on which Tables 2 and 3 have been amended for originally filed pages 24-26, and renumber the pages accordingly. A marked up version of the new Tables is also attached.

REMARKS

The Examiner indicated that sequences on pages 24, 25, 26 of the specification contained sequences that were not included in the earlier filed sequence listing. Sequence ID numbers are listed in the new tables. No new matter has been added.

Early and favorable consideration of the application is respectfully requested.

Should any fee be necessary for consideration of this paper, or to maintain the application, or any refund be due, please charge such fee or credit such refund to Deposit Account No. 22-0261 and notify the undersigned.

Respectfully submitted,

Dated: December 23, 2002

Ann S. Hobbs, Ph.D.
Registration No. 36,830
VENABLE
Post Office Box 34385
Washington, D.C. 20043-9998
Telephone: (202) 962-4800
Telefax : (202) 962-8300

OIPE JC139
DEC 2 3 2002
PATENT & TRADEMARK OFFICE

UNITED STATES PATENT AND TRADEMARK OFFICE

COMMISSIONER FOR PATENTS
UNITED STATES PATENT AND TRADEMARK OFFICE
WASHINGTON, D.C. 20231
www.uspto.gov

APPLICATION NUMBER	FILING/RECEIPT DATE	FIRST NAMED APPLICANT	ATTORNEY DOCKET NUMBER
09/881,012	06/13/2001	Edward I. Ginns	015280-248120US

CONFIRMATION NO. 8624

FORMALITIES LETTER

OC000000007182055

20350
TOWNSEND AND TOWNSEND AND CREW
TWO EMBARCADERO CENTER
EIGHTH FLOOR
SAN FRANCISCO, CA 94111-3834

Date Mailed: 12/11/2001

NOTICE TO COMPLY WITH REQUIREMENTS FOR PATENT APPLICATIONS CONTAINING NUCLEOTIDE SEQUENCE AND/OR AMINO ACID SEQUENCE DISCLOSURES

Applicant is given **TWO MONTHS FROM THE DATE OF THIS NOTICE** within which to file the items indicated below to avoid abandonment. Extensions of time may be obtained under the provisions of 37 CFR 1.136(a).

- The paper or compact disc copy of the "Sequence Listing" is not the same as the computer readable form of the "Sequence Listing" as required by 37 CFR 1.821(e). Applicant must provide a substitute paper or compact disc copy of the "Sequence Listing", as well as an amendment directing its entry into the application OR a substitute computer readable form (CRF) copy of the "Sequence Listing". These two items must be the same. Applicant must also provide a statement that the content of the sequence listing information recorded in computer readable form is identical to the written (on paper or compact disc) sequence listing and, where applicable, includes no new matter, as required by 37 CFR 1.821(e), 1.821(f), 1.821(g), 1.825(b), or 1.825(d). If the effective filing date is on or after September 8, 2000, see the final rulemaking notice published in the Federal Register at 65 FR 54604 (September 8, 2000) and 1238 OG 145 (September 19, 2000).

For questions regarding compliance to these requirements, please contact:

- **For Rules Interpretation, call (703) 308-4216**
- **To Purchase PatentIn Software, call (703) 306-2600**
- **For PatentIn Software Program Help, call (703) 306-4119 or e-mail at patin21help@uspto.gov or patin3help@uspto.gov**

A copy of this notice MUST be returned with the reply.

RECEIVED
DEC 2 7 2002
TECH CENTER 1600/2900

Customer Service Center
Initial Patent Examination Division (703) 308-1202
PART 2 - COPY TO BE RETURNED WITH RESPONSE

UNITED STATES PATENT AND TRADEMARK OFFICE

Commissioner for Patents
United States Patent and Trademark Office
P.O. Box 1450
Alexandria, VA 22313-1450
www.uspto.gov

VENABLE, BAETJER, HOWARD & CIVILETTI, LLP
1201 NEW YORK AVE, N.W.
SUITE 1000
WASHINGTON DC 20005

COPY MAILED

SEP 0 2 2004

OFFICE OF PETITIONS

In re Application of	:	
Ginns, et al.	:	
Application No. 09/881,012	:	DECISION ON PETITION
Filed: June 13, 2001	:	UNDER 37 CFR 1.78(a)(3)
Attorney Docket No. 39532-181808	:	

This is a decision on the petition under 37 CFR 1.78(a)(3), filed July 30, 2004, to accept an unintentionally delayed claim under 35 U.S.C. § 120 for the benefit of priority to the prior-filed nonprovisional application set forth in the amendment filed concurrently with the instant petition.

The petition is **GRANTED**.

A petition for acceptance of a claim for late priority under 37 CFR 1.78(a)(3) is only applicable to those applications filed on or after November 29, 2000. Further, the petition is appropriate only after the expiration of the period specified in 37 CFR 1.78(a)(2)(ii). In addition, the petition under 37 CFR 1.78(a)(3) must be accompanied by:

(1) the reference required by 35 U.S.C. § 120 and 37 CFR 1.78(a)(2)(i) of the prior-filed application, unless previously submitted;

(2) the surcharge set forth in § 1.17(t); and

(3) a statement that the entire delay between the date the claim was due under 37 CFR 1.78(a)(2)(ii) and the date the claim was filed was unintentional. The Commissioner may require additional information where there is a question whether the delay was unintentional.

The instant pending application was filed on June 13, 2001, and was pending at the time of filing of the instant petition. A reference to the prior-filed nonprovisional application has been included in an amendment to the first sentence of the specification following the title, as required by 37 CFR 1.78(a)(2)(iii).

The instant nonprovisional application was filed after November 29, 2000, and the claim herein for the benefit of priority to the prior-filed nonprovisional application is submitted after expiration of the period specified in 37 CFR 1.78(a)(2)(ii). Also, the reference to the prior-filed nonprovisional application was submitted during the pendency of the instant nonprovisional application, for which the claim for benefit of priority is sought. *See* 35 U.S.C. § 120. Accordingly, having found that the instant petition for acceptance of an unintentionally delayed claim for the benefit of priority under 35 U.S.C. § 120 to the prior-filed nonprovisional application satisfies the conditions of 37 CFR 1.78(a)(3), the petition is granted.

The granting of the petition to accept the delayed benefit claim to the prior-filed application under 37 CFR 1.78(a)(3) should not be construed as meaning that the instant application is entitled to the benefit of the prior-filed application. In order for the instant application to be entitled to the benefit of the prior-filed application, all other requirements under 35 U.S.C. § 120 and 37 CFR 1.78(a)(1) and (a)(2) must be met. Similarly, the fact that the corrected Filing Receipt accompanying this decision on petition includes the prior-filed application should not be construed as meaning that applicant is entitled to the claim for benefit of priority to the prior-filed application noted thereon. Accordingly, the examiner will, in due course, consider this benefit claim and determine whether the instant application is entitled to the benefit of the earlier filing date.

A corrected Filing Receipt, which includes the priority claim to the prior-filed nonprovisional application, accompanies this decision on petition.

This application is being forwarded to Technology Center Art Unit 1634 for appropriate action on the amendment filed July 30, 2004, including consideration by the examiner of applicant's entitlement to claim benefit of priority under 35 U.S.C. § 120 to the prior-filed nonprovisional application.

Any inquiries concerning this decision may be directed to Petitions Attorney Edward Tannouse at (703)306-9200.

Charles A. Pearson
Director
Office of Petitions

ATTACHMENT: Corrected Filing Receipt

UNITED STATES PATENT AND TRADEMARK OFFICE

Commissioner for Patents
United States Patent and Trademark Office
P.O. Box 1450
Alexandria, VA 22313-1450
www.uspto.gov

WHITHAM, CURTIS & CHRISTOFFERSON & COOK, P.C.
11491 SUNSET HILLS ROAD
SUITE 340
RESTON VA 20190

COPY MAILED

JAN 21 2009

OFFICE OF PETITIONS

In re Application of	:	
Kumar Bhaskaran et al.	:	
Application No. 09/881,024	:	DECISION ON PETITION
Filed: June 15, 2001	:	
Attorney Docket No. YOR9-99-314	:	

This is a decision on the petition under the unintentional provisions of 37 CFR 1.137(b), filed December 11, 2008, to revive the above-identified application.

The petition is **GRANTED**.

This application became abandoned for failure to timely pay the issue and publication fees on or before November 18, 2008, as required by the Notice of Allowance and Fee(s) Due, mailed August 18, 2008. Accordingly, the date of abandonment of this application is November 19, 2008.

The petition satisfies the requirements of 37 CFR 1.137(b) in that petitioner has supplied (1) the reply in the form of payment of the issue fee of $1510 and the publication fee of $300, (2) the petition fee of $1620; and (3) a proper statement of unintentional delay.

The change of address filed with the instant petition has been entered. However, the address on the petition is still different from the new customer number address of record. Therefore, a courtesy copy of this decision is being mailed to petitioner. Nevertheless, all future correspondence regarding this application file will be directed solely to the address of record until otherwise instructed.

Telephone inquiries concerning this decision should be directed to JoAnne Burke at (571) 272-4584.

This application is being referred to the Office of Data Management for processing into a patent.

Ramesh Krishnamurthy
Petitions Examiner
Office of Petitions

cc: Lynne D. Anderson
333 John Carlyle Street
Suite 635
Alexandria, VA 22314

UNITED STATES PATENT AND TRADEMARK OFFICE

COMMISSIONER FOR PATENTS
UNITED STATES PATENT AND TRADEMARK OFFICE
WASHINGTON, D.C. 20231
www.uspto.gov

Paper No. 7

Mary Michelle Kile
Foley & Lardner
Washington Harbour
3000 K Street, N.W., Suite 500
Washington, DC 20007-5109

COPY MAILED
JUL 0 1 2002
OFFICE OF PETITIONS

In re Application of	:	
Stephen W. Downing	:	
Application No. 09/881,045	:	ON PETITION
Filed: June 15, 2001	:	
Attorney Docket No. 034495-0103	:	

This is a decision on the petition under 37 CFR 1.137(b), filed May 24, 2002, to revive the above-identified application.

The petition is **GRANTED**.

The above-identified application became abandoned for failure to reply in a timely manner to the Notice to File Missing Parts of Application (Notice) mailed August 22, 2001. The Notice set a period for reply of two (2) months from the mail date of the Notice. No extensions of time under the provisions of 37 CFR 1.136(a) were obtained. Accordingly, the above-identified application became abandoned on October 23, 2001.

An extension of time under 37 CFR 1.136 must be filed prior to the expiration of the maximum extendable period for reply. See In re Application of S., 8 USPQ2d 1630, 1631 (Comm'r Pats. 1988). Accordingly, since the $980 extension of time submitted with the petition on May 24, 2002 was subsequent to the maximum extendable period for reply, this fee is unnecessary and will be credited to petitioner's deposit account no. 06-1450.

Telephone inquiries concerning this decision should be directed to Retta Williams at (703) 306-5594 or in my absence, Latrice Bond at (703) 308-6911.

The application file is being forwarded to Office of Initial Patent Examination for further processing.

Retta Williams

Retta Williams
Petitions Examiner
Office of Petitions
Office of the Deputy Commissioner
for Patent Examination Policy

for Sherry Brinkley

Latrice Bond
Petitions Examiner
Office of Petitions
Office of the Deputy Commissioner
for Patent Examination Policy

SPE RESPONSE FOR CERTIFICATE OF CORRECTION

Paper No.: —

DATE : 10/6/08

TO SPE OF : ART UNIT 1797

SUBJECT : Request for Certificate of Correction for Appl. No.: 9/881052 Patent No.: 7390459 B2

Please respond to this request for a certificate of correction within 7 days.

FOR IFW FILES:

Please review the requested changes/corrections as shown in the **COCIN** document(s) in the IFW application image. No new matter should be introduced, nor should the scope or meaning of the claims be changed.

Please complete the response (see below) and forward the completed response to scanning using document code **COCX**.

FOR PAPER FILES:

Please review the requested changes/corrections as shown in the attached certificate of correction. Please complete this form (see below) and forward it with the file to:

Certificates of Correction Branch (CofC)
South Tower - 9A22
Palm Location 7580

Virginia Tolbert
Certificates of Correction Branch
703-308-9390 ext. 113

Thank You For Your Assistance

The request for issuing the above-identified correction(s) is hereby:
Note your decision on the appropriate box.

- ☐ **Approved** — All changes apply.
- ☐ **Approved in Part** — Specify below which changes **do not** apply.
- ☒ **Denied** — State the reasons for denial below.

Comments:
Petition filed 4/28/08 requested deletion of these inventors. Petition filed 9/11/08 request they be added - but there is no explanation of why first petition is incorrect. Examiner needs more info from Applicant

JetWara
SPE

1797
Art Unit

PTOL-306 (REV. 7/03)

U.S. DEPARTMENT OF COMMERCE Patent and Trademark Office

UNITED STATES PATENT AND TRADEMARK OFFICE

Commissioner for Patents
United States Patent and Trademark Office
P.O. Box 1450
Alexandria, VA 22313-1450
www.uspto.gov

November 10, 2008

Jerry L. Hefner
NOBBE, MARTENS, OLSON & BEAR, LLP
2040 Main Street, 14th Floor
Irvine, CA 92614

Patent No: 7,390,459 B2
Application No: 09/881,052
Applicant: Michael Lebl, et al.
Issued: June 24, 2008
Title: **OLIGONUCLEOTIDE SYNTHESIZER**

Request for Certificate of Correction:

Consideration has been given to your request for the issuance of a certificate of correction for the above- identified patent under the provisions of Rule 1.322/1.323.

Inspection of the request for certificate of correction reveals that there are several errors. Per the examiner "The petition filed 04/28/08 requested deletion of these inventors. Petition filed 09/11/08 request they be added, but there is no explanation of why first petition is incorrect." The examiner needs more information from applicant.

In view of the foregoing your request in this matter are hereby **denied**.

Further correspondence concerning this matter should be filed and directed to Decisions & Certificates of Correction Branch.

Virginia Tolbert
For Mary F. Diggs, Supervisor
Decisions and Certificate of Correction
(703) 308-8309 or (703) 308-9390 ext. 113

vt

UNITED STATES PATENT AND TRADEMARK OFFICE

COMMISSIONER FOR PATENTS
UNITED STATES PATENT AND TRADEMARK OFFICE
P.O. BOX 1450
ALEXANDRIA, VA 22313-1450
www.uspto.gov

COPY MAILED
JUN 21 2006
OFFICE OF PETITIONS

FISH & NEAVE IP GROUP
ROPES & GRAY LLP
ONE INTERNATIONAL PLACE
BOSTON, MA 02110-2624

In re Patent No. 6,981,158 : DECISION UNDER 37 CFR
Issued: December 27, 2005 : 1.705(d)
Application No. 09/881,074 :
Filed: June 14, 2001 :
Atty. Dkt. No.: 00-4039(B) :

This is a decision on the "REQUEST FOR RECONSIDERATION OF PATENT TERM ADJUSTMENT UNDER," filed March 1, 2006. This matter is being treated under 37 CFR 1.705(d) as a timely filed application for patent term adjustment.

The application for patent term adjustment ("PTA") under 37 C.F.R. § 1.705(d) is **DISMISSED**.

The above-identified application matured into U.S. Patent No. 6,981,158 on December 27, 2005. The instant request for reconsideration was timely filed March 1, 2006 (certificate of mailing date of February 27, 2006) in accordance with 37 C.F.R. § 1.705(d). The patent issued with a PTA of 912 days. Patentees argue that the adjustment of 912 days is incorrect and that the correct adjustment is 1,032 days.

A review of the application history reveals that an adjustment of 1,032 days can be attributed to the Office. Patentees argue that the adjustment 1,032 days was improperly reduced 120 days in connection with the submission of an Information Disclosure Statement (IDS) on January 18, 2005. Patentees argue that the submission of the IDS on January 18, 2005 is not a failure to engage in reasonable efforts to conclude prosecution because the IDS contained the requisite statement set forth at 37 CFR 1.704(d), i.e., that each item of information contained in the IDS was first cited in any communication from a foreign patent office in a counterpart application and that this communication was not received by any individual designated in § 1.56(c) more than thirty days prior to the filing of the IDS.

Patentees arguments have been carefully considered, but are not found convincing. The IDS submitted January 18, 2005 constituted a failure to engage in reasonable efforts to conclude

prosecution because the statement contained therein failed to comply with the requirements of 37 CFR 1.704(d); i.e., the statement contained therein does in state, as per 37 CFR 1.704(d) "that each item of information contained in the information disclosure statement was first cited in any communication from a foreign patent office in a counterpart application and that this communication was not received by any individual designated in § 1.56(c) more than **thirty** days prior to the filing of the information disclosure statement."

In view thereof, at the time of issuance, the patent was entitled to an overall adjustment of 912 days, as indicated on the patent.

The required application fee of $200.00 has been charged to Deposit Account No. 18-1945 as authorized in the instant application for PTA.

Any request for reconsideration of this decision must be submitted within TWO MONTHS of the mail date indicated above. Extensions of time for reconsideration under 37 CFR 1.136 will not be permitted.

Telephone inquiries specific to this matter should be directed to Petitions Attorney Alesia M. Brown at (571) 272-3205.

Kery Fries

Kery Fries
Senior Patent Attorney
Office of Patent Legal Administration
Office of Deputy Commissioner
for Patent Examination Policy

UNITED STATES PATENT AND TRADEMARK OFFICE

COMMISSIONER FOR PATENTS
UNITED STATES PATENT AND TRADEMARK OFFICE
P.O. BOX 1450
ALEXANDRIA, VA 22313-1450
www.uspto.gov

OCT - 1 2003

MAILED

OCT - 1 2003

OFFICE OF THE DIRECTOR
TC 3600

SUGHRUE, MION, ZINN
MACPEAK & SEAS
2100 Pennsylvania Avenue, N.W.
Washington DC 20037

Paper No 8

In re Application of
Hayato Yamauchi
Application No.09/881108
Filed:June 15, 2001
For: PINION SLIP-OFF PREVENTIVE STRUCTURE OF STARTING APPARATUS

DECISION ON PETITION TO WITHDRAW THE HOLDING OF ABANDONMENT

The paper filed July 18, 2003 has been treated as a Petition to Withdrawal the Holding of Abandonment.

The petition is **GRANTED** in view of the following evidence of timely filing :

☐ Postcard receipt being dated _____.

☐ USPTO return facsimile receipt dated_____.

☐ Certificate of Mailing/Transmission signed on _____. and supported by a statement under 37 C.F.R. 1.8(b)(3).

☐ Hand Delivery Receipt of the specific documents submitted dated _____.

☐ Certificate of Transmission of CPA under 37 C.F.R. 1.6 filed on _____.

☐ Express Mail Receipt under 37 C.F.R. 1.10 dated _____.

☒ Originally sent response filed July 18, 2003 has been found and matched with the application effecting the petition to be dismissed as moot.

This application is being forwarded to the examiner for appropriate action.

KENNETH J. DORNER
SPECIAL PROGRAMS EXAMINER
TECHNOLOGY CENTER 3600

UNITED STATES PATENT AND TRADEMARK OFFICE

COMMISSIONER FOR PATENTS
UNITED STATES PATENT AND TRADEMARK OFFICE
WASHINGTON, D.C. 20231
www.uspto.gov

Paper No. 8

Richard L. Schwaab
FOLEY & LARDNER
Washington Harbour
3000 K Street, Suite 500
Washington, DC 20007-5109

MAILED

MAR 18 2002

Director's Office
Group 3700

In re Application of
PANTOW ET AL.
Application No.: 09/881,122
Filed: June 15, 2001
Attorney Docket No.: 016906/0220

DECISION GRANTING PETITION TO RESET PERIOD FOR REPLY

This is a decision on the petition filed on February 6, 2002, requesting that the shortened statutory period for reply set forth in the Office communication mailed on December 5, 2001 be reset to run from the date on which the Office communication was actually received at the correspondence address of record.

The petition is granted.

Petitioner provided a statement that the Office communication in question was received at the correspondence address of record on January 29, 2002. The petition was filed within two weeks of receipt of the Office communication. A substantial portion of the set reply period had elapsed on the date of receipt. Furthermore, the Office communication was mailed between October 13, 2001 and January 2, 2002, when delivery of mail from the Office to certain regions of the country was delayed.

Accordingly, the shortened statutory period that was originally set forth in the Office communication originally mailed on December 5, 2001 is hereby reset to run FROM THE RECEIPT DATE OF January 29, 2002.

Richard A. Bertsch

Richard A. Bertsch, Director
Technology Center 3700
(703) 308-0975

UNITED STATES PATENT AND TRADEMARK OFFICE

COMMISSIONER FOR PATENTS
UNITED STATES PATENT AND TRADEMARK OFFICE
P.O. BOX 1450
ALEXANDRIA, VA 22313-1450
www.uspto.gov

Paper No. 12

FULWIDER PATTON LEE & UTECHT LLP
HOWARD HUGHES CENTER
6060 CENTER DRIVE
TENTH FLOOR
LOS ANGELES, CA 90045

COPY MAILED

MAR 1 6 2004

OFFICE OF PETITIONS

In re Application of
Yamamoto et al.
Application No. 09/881,134
Filed: June 14, 2001
Attorney Docket No. AVERY-66095

ON PETITION

This is a decision on the petition under 37 C.F.R. § 1.137(b), filed March 2, 2004, to revive the above-identified application.

The petition is **granted.**

This application became abandoned for failure to timely reply within three months to the non-final Office action mailed January 15, 2003. No extensions of time under the provisions of 37 CFR 1.136(a) were timely obtained. Accordingly, this application became abandoned on April 16, 2003. A Notice of Abandonment was mailed on August 12, 2003.

Petitioner has met the requirements to revive the above-identified application pursuant to 37 CFR 1.137(b).

An extension of time under 37 CFR 1.136 must be filed prior to the expiration of the maximum extendable period for reply. See In re Application of S., 8 USPQ2d 1630, 1631 (Comm'r Pats. 1988). Accordingly, since the $950.00 extension of time fee submitted with the petition on March 2, 2004 was subsequent to the maximum extendable period for reply, this fee is unnecessary and will be credited to petitioner's deposit account as authorized.

The file is now being forwarded to Technology Center 1700 for further examination on the merits.

Telephone inquiries should be directed to the undersigned at (703) 306-0482.

Liana Chase
Petitions Examiner
Office of Petitions
Office of the Deputy Commissioner
for Patent Examination Policy

UNITED STATES PATENT AND TRADEMARK OFFICE

Commissioner for Patents
United States Patent and Trademark Office
P.O. Box 1450
Alexandria, VA 22313-1450
www.uspto.gov

PETER P. SCOTT
INTELLECTUAL PROPERTY LAW, DEPARTMENT
LSI LOGIC CORPORATION
1551 MCCARTHY BLVD., M/S D-106
MILPITAS, CA 95035

COPY MAILED

SEP 0 7 2004

OFFICE OF PETITIONS

In re Application of :
Erik Paulsen et al :
Application No. 09/881,151 :
Filed: June 14, 2001 :
Attorney Docket No. 00-576 :

ON PETITION

This is a decision on the petition under 37 CFR 1.137(b), filed July 12, 2004, to revive the above-identified application.

The petition is **GRANTED.**

The above-identified application became abandoned for failure to reply in a timely manner to the final Office action mailed December 31, 2003, which set a shortened statutory period for reply of three (3) months. One month extension of time under the provision of 37 CFR 1.136(a) was obtained. Accordingly, the above-identified application became abandoned on May 1, 2004.

An extension of time under 37 CFR 1.136 must be filed prior to the expiration of the maximum extendable period for reply. See In re Application of S., 8 USPQ2d 1630, 1631 (Comm'r Pats. 1988). Accordingly, since the $840 extension of time submitted with the petition on July 12, 2004 was subsequent to the maximum extendable period for reply, this fee is unnecessary and will be credited to petitioner's deposit account.

The above-identified application is being revived solely for purposes of continuity with a Request For Continued Examination (RCE) filed on July 12, 2004.

It is not apparent whether the person signing the statement of unintentional delay was in a position to have firsthand or direct knowledge of the facts and circumstances of the delay at issue. Nevertheless, such statement is being treated as having been made as the result of a reasonable inquiry into the facts and circumstances of such delay. See 37 CFR 10.18(b) and Changes to Patent Practice and Procedure; Final Rule Notice, 62 Fed. Reg. 53131, 53178 (October 10, 1997), 1203 Off. Gaz. Pat. Office 63, 103 (October 21, 1997). In the event that such an inquiry has not been made, petitioner must make such an inquiry. If such inquiry results in the discovery that it is not correct that the entire delay in filing the required reply from the due

date for the reply until the filing of a grantable petition pursuant to 37 CFR 1.137(b) was unintentional, petitioner must notify the Office.

The person signing the instant petition also requests a change of correspondence address to the address given in the instant petition. There is, however, no indication that the person signing the instant petition was ever given a power of attorney or authorization of agent to prosecute the above-identified application. If the person signing the instant petition desires to receive future correspondence regarding this application, the appropriate power of attorney or authorization of agent must be submitted. While a courtesy copy of this decision is being mailed to the person signing the instant petition, all future correspondence will be directed to the address currently of record until such time as appropriate instructions are received to the contrary.

Telephone inquiries concerning this decision should be directed to Irvin Dingle at (703) 306-5684.

The application file is being forwarded to Technology Center AU 2822 for further processing.

Irvin Dingle
Petitions Examiner
Office of Petitions
Office of the Deputy Commissioner
for Patent Examination Policy

cc:

Peter Scott
LSI Logic Corporation
Legal Department – IP, M/S D-106
1621 Barber Lane
Milpitas, CA 95035

UNITED STATES PATENT AND TRADEMARK OFFICE

Commissioner for Patents
United States Patent and Trademark Office
P.O. Box 1450
Alexandria, VA 22313-1450
www.uspto.gov

Grant A. Johnson
IBM Corporation
Intellectual Property Law
Sept. 917, Bldg. 006-1
3605 Highway 52 North
Rochester, MN 55901

COPY MAILED

JUL 0 7 2005

OFFICE OF PETITIONS

In re Application of
Bates et al.
Application No. 09/881,168
Filed: June 14, 2001
Attorney Docket No. ROC920010105US1

DECISION DISMISSING PART REQUEST AND HOLDING OTHER PART REQUEST IN ABEYANCE

This decision is in response to applicants' "REQUEST FOR RECONSIDERATION OF PATENT TERM ADJUSTMENT INDICATED IN NOTICE OF ALLOWANCE (37 CFR § 1.705)" timely[1] filed requesting that the Office adjust the determination to reflect a value of 237 days.

Applicants' request for reconsideration is **DISMISSED** as to applicants' assertion that a successful appellate review occurred in this application and applicants' request for reconsideration as to Office delay in not issuing the application within three years of the filing date is **HELD IN ABEYANCE** until the issuance of the patent.

Applicants assert that they are entitled to PTA for Office delay on two grounds: 1) the application contained a "successful appellate review" within the meaning of 1.702(e) and (2) the Office did not issue the application with three years of the filing date of the application.

Applicants arguments are not persuasive. As to applicants' assertion that a successful appellate review occurred, the Office notes that the Board of Patent Appeals and Interferences never made a decision in the application and accordingly a "successful appellate review" within the meaning of 37 CFR 1.702(e) has not occurred.[2]

As to applicants' assertion that the patent issued more than three years after the filing date,

[1]Issue fee paid on 10-13-2004.

[2]In order to be a successful review, at least one claim must be reversed on all grounds under to be considered a successful appellate review.

knowledge of the actual date the patent issues is required to calculate the amount, if any, of additional patent term is accrued pursuant to 37 CFR 1.703(b).

Patentees are given **TWO (2) MONTHS** from the issue date of the patent to file a written request for reconsideration of the patent term adjustment for Office failure to issue the patent within 3 years. A copy of this decision should accompany the request. Patentee may seek such consideration without payment of an additional fee. However, as to all other bases for seeking reconsideration of the patent term adjustment indicated in the patent, all requirements of § 1.705(d) must be met. Requests for reconsideration on other bases must be timely filed and must include payment of the required fee.

Petitioner is reminded that if an application is entitled to an adjustment under 35 U.S.C. 154(b)(1)(B), the entire period during which the application (except for periods excluded under 35 U.S.C. 154(b)(1)(B)(i)-(iii)), and not just the period beginning three years after the actual filing date of the application, is the period of delay under 35 U.S.C. 154(b)(1)(B) in determining whether periods of delay overlap under 35 U.S.C. 154(b)(2)(A). Thus, any days of delay for Office issuance of the patent more than 3 years after the filing date of the application which overlap with the days of patent term adjustment accorded prior to the issuance of the patent will not result in any additional patent term adjustment. See 35 U.S.C. 154(b)(1)(B), 35 U.S.C. 154(b)(2)(A), and 37 CFR § 1.703(f). See also *Revision of Patent Term Extension and Patent Term Adjustment Provisions*; *Final Rule*, 69 Fed. Reg. 21704 (April 22, 2004).

The Office acknowledges submission of the $200.00 fee set forth in 37 CFR 1.18(e). No additional fees are required.

The application file is being forwarded to the Office of Patent Publication for issuance of the patent. Any delays in issuance of the patent longer than four months of the payment of the issuance fee and other requirements being satisfied will be reflected in the issue notification letter that is mailed to applicants approximately three weeks prior to the issuance of the patent.

The Office acknowledges the payment of the $200.00 application fee. No additional fees are required by this Office.

Any questions concerning this decision should be directed to Kery Fries, Senior Legal Advisor, Office of Patent Legal Administration, Office of Deputy Commissioner for Patent Examination Policy at 571-272-7757.

Kery A Fries

Karin Ferriter

Senior Legal Advisor
Office of Patent Legal Administration

Office of Deputy Commissioner
for Patent Examination Policy

UNITED STATES PATENT AND TRADEMARK OFFICE

Commissioner for Patents
United States Patent and Trademark Office
P.O. Box 1450
Alexandria, VA 22313-1450
www.uspto.gov

DARBY & DARBY P.C.
P.O. BOX 5257
NEW YORK NY 10150-5257

COPY MAILED

SEP 01 2006

OFFICE OF PETITIONS

In re Application of :
Goldman, et al. :
Application No. 09/881,225 :
Filed: June 12, 2001 :
Attorney Docket No. 08204/0203162-US0 :
For: METHOD AND APPARATUS TO FACILITATE AUTOMATIC SHARING IN A CLIENT SERVER ENVIRONMENT

ON PETITION

This is a decision on the petition under 37 CFR 1.137(b), filed April 5, 2006, to revive the above-identified application.

The above-identified application became abandoned for failure to reply to the non-final Office action mailed November 10, 2004, which set a shortened statutory period for reply of three (3) months. No extensions of time under the provisions of 37 CFR 1.136(a) were obtained. Accordingly, the application became abandoned on February 11, 2005 for failure to reply. A Notice of Abandonment was mailed on June 15, 2005.

Petitioners have submitted an amendment in reply to the November 10, 2004 non-final Office action, an acceptable statement of the unintentional nature of the delay in responding to the November 10, 2004 non-final Office action, and the required petition fee.

The petition is **GRANTED**.

The application file is being forwarded to Technology Center AU 2145 for consideration of the amendment filed on April 5, 2006.

Telephone inquiries concerning this decision should be directed to the undersigned at (571) 272-3230.

Shirene Willis Brantley
Senior Petitions Attorney
Office of Petitions

UNITED STATES PATENT AND TRADEMARK OFFICE

Commissioner for Patents
United States Patent and Trademark Office
P.O. Box 1450
Alexandria, VA 22313-1450
www.uspto.gov

NOV - 1 2004

Paper No. 9

In re Application of
Steven Swaddle
Application No. 09/881,233
Filed: June 14, 2001
Attorney Docket No. P-US-CS 1096#SP

: DECISION ON PETITION

This is a decision on the petition originally filed on August 11, 2003, as resubmitted by facsimile transmission on August 10, 2004, by which petitioner requests withdrawal of the holding that this application is abandoned for failure to file a reply to the Office letter dated September 24, 2002. The petition is being considered under 37 CFR 1.181, and no fee is required.

The petition is granted.

Petitioner alleges that this application is not abandoned because petitioner did not receive the Office letter in question. A review of the petition shows that petitioner has not provided a satisfactory showing that this correspondence was not received, because petitioner has not provided a copy of the docket record where receipt of the action would have been recorded, and has not referenced such docket record in the petition. In general, see the Notice published at 1156 OG 53, as discussed in MPEP § 711.03(c), subsection entitled "Petition to Withdraw Holding of Abandonment Based on Failure to Receive Office Action." However, inspection of the application file shows that the Office letter in question, although properly addressed, was returned undelivered. Therefore, the record does in fact establish that petitioner did not received the Office letter dated September 24, 2002, and the application is not, therefore, abandoned.

Accordingly, the Notice of Abandonment is hereby vacated, the holding of abandonment is withdrawn, and the application is restored to pending status. The application is being forwarded to the Head Supervisory Applications Examiner to re-mail the Office letter dated September 24, 2002, and all attachments thereto. In order to avoid abandonment, a reply to the re-mailed Office letter will be due three months from the date that the letter is remailed. This period will be extendible pursuant to 37 CFR 1.136(a), but in no event may the period be extended to run more than six months from the date of the re-mailed action. See 35 USC § 133.

PETITION GRANTED.

E. Rollins-Cross, Director
Technology Center 3700

Bruce S. Shapiro
701 E. Joppa Road
Towson, MD 21286

UNITED STATES PATENT AND TRADEMARK OFFICE

COMMISSIONER FOR PATENT
UNITED STATES PATENT AND TRADEMARK OFFIC
WASHINGTON, D.C. 20231
www.uspto.go

Paper No. 5

ANDREW T. PROKOPETZ
OLIVE & OLIVE, P.A.
P.O. BOX 2049
DURHAM, NC 27702-2049

COPY MAILED

MAR 2 1 2003

OFFICE OF PETITIONS

In re Application of :
William Bickel :
Application No. 09/881,237 :
Filed: June 15, 2001 :
Attorney Docket No. :

ON PETITION

This is a decision on the petition under 37 CFR 1.137(b), filed March 10, 2003, to revive the above-identified application.

The petition is **GRANTED**.

The above-identified application became abandoned for failure to reply in a timely manner to the non-final Office action mailed May 17, 2002, which set a shortened statutory period for reply of three (3) months. No extensions of time under the provisions of 37 CFR 1.136(a) were obtained. Accordingly, the above-identified application became abandoned on August 18, 2002.

37 CFR 1.137(b)(3) requires a statement that the entire delay in filing the required reply from the due date for the reply until the filing of a grantable petition pursuant to 37 CFR 1.137(b) was unintentional. If the statement contained in the instant petition varies from the language required by 37 CFR 1.137(b)(3), the statement contained in the instant petition is being construed as the statement required by 37 CFR 1.137(b)(3) and petitioner must notify the Office if this is **not** a correct interpretation of the statement contained in the instant petition.

Telephone inquiries concerning this decision should be directed to Irvin Dingle at (703) 306-5684.

The application file is being forwarded to Technology Center 3700 for further processing.

Irvin Dingle
Petitions Examiner
Office of Petitions
Office of the Deputy Commissioner
for Patent Examination Policy

UNITED STATES PATENT AND TRADEMARK OFFICE

Commissioner for Patents
United States Patent and Trademark Office
P.O. Box 1450
Alexandria, VA 22313-1450
www.uspto.gov

NAVAL UNDERSEA WARFARE CENTER
DIVISION NEWPORT
1176 HOWELL STREET, CODE OOOC
BLDG 112T
NEWPORT, RI 02841

COPY MAILED

MAR 0 3 2005

OFFICE OF PETITIONS

In re Application of	:	
Kirk P. Smith et al	:	
Application No. 09/881,243	:	ON PETITION
Filed: August 30, 2001	:	
Attorney Docket No. 84,216	:	

This is a decision on the petition under 37 CFR 1.137(b), filed October 25, 2004, to revive the above-identified application.

The petition is **GRANTED**.

The above-identified application became abandoned for failure to submit the issue fee, publication fee and the formal drawing in a timely manner in reply to the Notice of Allowance and the Notice of Allowability mailed February 24, 2004, which set a shortened statutory period for reply of three (3) months. Accordingly, the above-identified application became abandoned on May 25, 2004.

Telephone inquiries concerning this decision should be directed to the undersigned at (571) 272-3208.

This matter is being referred to Patent Publication.

Karen Creasy

Karen Creasy
Petitions Examiner
Office of Petitions
Office of the Deputy Commissioner
for Patent Examination Policy

UNITED STATES PATENT AND TRADEMARK OFFICE

Commissioner for Patents
United States Patent and Trademark Office
Washington, D.C. 20231
www.uspto.gov

MAIL Paper No. 6

APR 05 2002

DIRECTOR OFFICE
TECHNOLOGY CENTER 2600

FENWICK & WEST LLP
TWO PALO ALTO SQUARE
PALO ALTO, CA 94306

In re Application of:
Gyudong Kim, et al
Application No.: 09/881,271
Filed: June 14, 2001
Title: METHODS AND SYSTEMS FOR SENDING SIDE-CHANNEL DATA DURING DATA INACTIVE PERIOD

DECISION ON REQUEST TO WITHDRAW AS ATTORNEY

This is a decision on the Request To Withdraw As Attorneys filed February 26, 2002.

A grantable request to withdraw as attorney of record should indicate thereon the present mailing addresses of the attorney(s) who is/are withdrawing from the record and of the applicant. The request for withdrawal must be signed by every attorney seeking to withdraw or contain a clear indication that one attorney is signing on behalf of another/others. A request to withdraw will not be approved unless at least 30 (thirty) days would remain between the date of approval and the later of the expiration date of a time to file a response or the expiration date of the maximum time period which can be extended under 37 C.F.R. § 1.136(a). The effective date of withdrawal being the date of decision and not the date of request. See M.P.E.P. § 402.06. 37 C.F.R. § 1.36 further requires that the applicant or patent owner be notified of the withdrawal of the attorney or agent.

The request is **GRANTED**.

The following attorneys have been withdrawn from the record: Greg T. Sueoka; Jeffrey S. Smith; and C. Eric Schulman.

All future communications from the Office will be directed to the below-listed address until otherwise notified by applicant. This correspondence address is provided by the withdrawn attorney(s). Applicant is reminded of the obligation to promptly notify the Patent and Trademark Office (Office) of any change in correspondence address to ensure receipt of all communications from the Office.

Kenneth A. Wieder
Special Program Examiner
Technology Center 2600
Communications
(703) 305-4710

cc: Paul Hickman
Oppenheimer Wolff & Donnelly, LLP
1400 Page Mill Road
Palo Alto, CA 94304

UNITED STATES PATENT AND TRADEMARK OFFICE

COMMISSIONER FOR PATENTS
UNITED STATES PATENT AND TRADEMARK OFFICE
P.O. BOX 1450
ALEXANDRIA, VA 22313-1450
www.uspto.gov

BLAKELY SOKOLOFF TAYLOR & ZAFMAN
12400 WILSHIRE BOULEVARD
SEVENTH FLOOR
LOS ANGELES CA 90025-1030

COPY MAILED

APR 10 2006

OFFICE OF PETITIONS

ON PETITION

In re Application of :
Connor :
Application No. 09/881,302 :
Filed: June 13, 2001 :
Attorney Docket No. 42390P11642 :
For: METHOD AND APPARATUS TO MANAGE RESOURCES FOR A MULTI-THREADED DEVICE DRIVER

This is a decision on the petition under 37 CFR 1.137(b), filed on March 13, 2006 (certificate of mailing March 10, 2006) to revive the above-identified application.

This application became abandoned for failure to timely respond to the final Office action mailed August 11, 2005, which set an extendable three month period for reply. Accordingly, this application became abandoned on November 12, 2005. A Notice of Abandonment was mailed on March 13, 2006.

Applicant has submitted a RCE and required fee and amendment in reply to the August 11, 2005 final Office action, an acceptable statement of the unintentional nature of the delay in responding to the August 11, 2005 final Office action, and the petition fee.

The petition under 37 CFR 1.137(b) is **GRANTED**.

The application file does not indicate a change of address has been filed in this case, although the address given on the petition differs from the address of record. A change of address should be filed in this case in accordance with MPEP 601.03. A courtesy copy of this decision is being mailed to the address noted on the petition. However, until otherwise instructed, all future correspondence regarding this application will be mailed solely to the address of record.

After the mailing of this decision the application will be forwarded to Technology Center AU 2143 for consideration of the RCE and amendment filed on March 13, 2006 (certificate of mailing date March 10, 2006).

Telephone inquiries pertaining to this decision may be directed to the undersigned at (571) 272-3230.

E. Shirene Willis
Senior Petitions Attorney
Office of Petitions

CC: JOHN F. KACVINSKY
4500 BROOKTREE ROAD, SUITE 102
WEXFORD, PA 15090

UNITED STATES PATENT AND TRADEMARK OFFICE

COMMISSIONER FOR PATENTS
UNITED STATES PATENT AND TRADEMARK OFFICE
P.O. BOX 1450
ALEXANDRIA, VA 22313-1450
www.uspto.gov

MAILED

OCT 15 2003

DIRECTOR'S OFFICE
TECHNOLOGY CENTER 3600

Schlumberger
Intellectual Property Law Department
Schlumberger-Doll Research
Old Quarry Road
Ridgefield CT 06877-4108

Paper No 10

In re Application of
Bruce W. Boyle et al.
Application No. 09/881,333
Filed: June 14, 2001
For: LOW-LOSS INDUCTIVE COUPLERS FOR USE IN WIRED PIPE STRINGS

DECISION ON PETITION TO WITHDRAW THE HOLDING OF ABANDONMENT

This is in response to applicants' petition to withdraw the holding of abandonment filed in the United States Patent and Trademark Office (USPTO), on May 19, 2003.

The petition is **DENIED**.

A review of the file record indicates that an Office action was mailed to applicants on September 16, 2002. Since a response was not timely filed, the application was held to be abandoned, and a Notice to that effect was mailed on May 2, 2003.

The petition includes a copy of the previously filed response. Applicants submit a returned postcard identifying the amendment; however, the postcard bears a USPTO Mail Room receipt date of October 21, 2002. This is unacceptable evidence of a timely filed response since the one-month shortened period for response expired on October 16, 2002 and the response did not include a petition for a one-month extension of time.

Applicants submit, along with the copy of the postcard, the response showing a Certificate of Mailing executed on October 16, 2002.

Any petition to withdraw the holding of abandonment based upon a Certificate of Mailing must include the following requirements:

(1) A copy of a response bearing a signed Certificate of Mailing which includes the date of signing; and

(2) A statement attesting to the personal knowledge of mailing the response on the date indicated on the Certificate of Mailing (see 37 CFR 1.8 and MPEP 512).

The petition does not include a statement under 37 CFR 1.8(b)(3) from John L. Lee attesting to the personal knowledge of mailing the response on the date indicated on the certificate

However, such statement in this case will not overcome the deficiency of amendment since as applicant has admitted, the amendment was noted to be a DRAFT amendment and therefore could not in any case be considered to be a formal amendment proper to enter.

Further review of the petition indicates that applicant sent a second response on February 28, 2003 with an Auto-Reply Facsimile Transmission. This is unacceptable evidence of a timely filed response since the one-month shortened statutory period for response expired on October 16, 2002 and the response did not include a petition for an extension of time.

Since applicants' petition to withdraw the Holding of Abandonment will not be granted applicant may wish to consider filing a petition to revive under 37 CFR 1.137(a) (unavoidable delay) or 37 CFR 1.137(b) (unintentional delay) as discussed below.

I. Unavoidable Delay.

A grantable petition to revive an abandoned application under 37 CFR 1.137(a) must be accompanied by: **(1)** the required reply (unless previously filed), which may be met by the filing of a continuing application in a nonprovisional application abandoned for failure to prosecute; **(2)** the petition fee required by 37 CFR 1.17(l); and **(3)** an adequate showing to the satisfaction of the Commissioner that the entire delay in filing the required reply from the due date for the reply until the filing of a grantable petition pursuant to 37 CFR 1.137(a) was unavoidable.

The showing requirement can be met by submission of statements of fact establishing that the delay in filing the reply was unavoidable. This includes a satisfactory showing that the cause of the delay resulting in failure to reply in a timely fashion to the Office action was unavoidable. Diligence during the time period between abandonment and filing of the petition to revive must also be shown.

As an alternative to filing a petition for unavoidable abandonment, a petition for revival of an application abandoned unintentionally under 37 CFR 1.137(b) might be appropriate.

II Unintentional Delay.

A grantable petition to revive an abandoned application under 37 CFR 1.137(b) must be accompanied by: **(1)** the required reply (unless previously filed), which

may be met by the filing of a continuing application in a nonprovisional application abandoned for failure to prosecute; (**2**) the petition fee required by 37 CFR 1.17(m); and (**3**) a statement that the entire delay in filing the required reply from the due date for the reply until the filing of a grantable petition pursuant to 37 CFR 1.137(b) was unintentional.

The petition fee required by law for filing a petition under unavoidable standard is $110. The fee for a petition under the unintentional standard is $1,300. If applicants have, or can qualify as a "small entity" and does so prior to or together with the payment of the fee, the fee will be one-half of the amount indicated.

If not previously filed, the reply to the outstanding Office action must accompany the petition to revive.

The required items should be promptly submitted under a cover letter entitled "Petition to Revive".

Further correspondence with respect to a petition to revive should be addressed as follows:

By mail: Commissioner for Patents
P.O. Box 1450
Alexandria, VA 22313-1450

By Hand: Crystal Plaza 4, Suite 3C23
2201 South Clark Place
Arlington, VA 22202

Any request for reconsideration of this decision must be submitted within TWO (2) MONTHS from the mail date of this decision. Extensions of time under 37 CFR 1.136(b) are permitted. The reconsideration request should include a cover letter entitled "Renewed Petition to Withdraw the Holding of Abandonment Under 37 CFR 1.181."

Kenneth J. Dorner
Special Programs Examiner
Technology Center 3600
(703) 308-0866

KJD/ekn 10/9/03

UNITED STATES PATENT AND TRADEMARK OFFICE

COMMISSIONER FOR PATENTS
UNITED STATES PATENT AND TRADEMARK OFFICE
P.O. BOX 1450
ALEXANDRIA, VA 22313-1450
www.uspto.gov

Paper No. 14

Schlumberger
Intellectual Property Law Department
Schlumberger-Doll Research
Old Quarry Road
Ridgefield, CT 06877-4108

COPY MAILED

FEB 25 2004

OFFICE OF PETITIONS

In re Application of

Boyle, et al.

Application No. 09/881,333

Filed: June 14, 2001

Attorney Docket No. 60.1336

DECISION ON PETITION

This is a decision on the petition under 37 CFR 1.137(b), filed November 10, 2003, to revive the above-identified application.

The petition is **GRANTED**.

The above-cited application became abandoned for failure to reply in a timely manner to the non-final Office action mailed September 16, 2002, which set a shortened statutory period for reply of one (1) month from its mailing date. Extensions of the time set for reply were available pursuant to 37 CFR 1.136(a). No response was received within the allowable period. Accordingly, the application became abandoned on October 17, 2002. A Notice of Abandonment was mailed on May 2, 2003.

It is not apparent whether the person signing the statement of unintentional delay was in a position to have firsthand or direct knowledge of the facts and circumstances of the delay at issue. Nevertheless, such statement is being treated as having been made as the result of a reasonable inquiry into the facts and circumstances of such delay. See 37 CFR 10.18(b) and Changes to Patent Practice and Procedure; Final Rule Notice, 62 Fed. Reg. 53131, 53178 (October 10, 1997), 1203 Off. Gaz. Pat. Office 63, 103 (October 21, 1997). In the event that such an inquiry has not been made, petitioner must make such an inquiry. If such inquiry results in the discovery that it is not correct that the entire delay in filing the required reply from the due date for the reply until the filing of a grantable petition pursuant to 37 CFR 1.137(b) was unintentional, petitioner must notify the Office.

There is no indication that the person signing the instant petition was ever given a power of attorney or authorization of agent to prosecute the above-identified application. If the person signing the instant petition desires to receive future correspondence regarding this application, the appropriate power of attorney or authorization of agent must be submitted. While a courtesy copy of this decision is being mailed to the person signing the instant petition, all future correspondence will be directed to the address of currently of record until such time as appropriate instructions are received to the contrary.

The response to the restriction requirement filed November 10, 2003, is noted and made of record.

The application is being forwarded to Technology Center 3600 for further processing.

Telephone inquiries concerning this decision should be directed to the undersigned at (703) 305-0010.

Kenya A. McLaughlin

Kenya A. McLaughlin
Petitions Attorney
Office of Petitions

cc:
John L. Lee
Lee Patent Service
48 Summer Street
Stoneham, MA 02180

UNITED STATES PATENT AND TRADEMARK OFFICE

Commissioner for Patents
United States Patent and Trademark Office
P.O. Box 1450
Alexandria, VA 22313-1450
www.uspto.gov

JJGJR.: 03-06

Paper No:__

MOTOROLA, INC.
1303 EAST ALGONQUIN ROAD
IL01/3RD
SCHAUMBURG IL 60196

COPY MAILED
MAR 3 0 2006
OFFICE OF PETITIONS

In re Application of	:	
Harris, et al.	:	DECISION
Application No. 09/881,337	:	
Filing Date: 14 June, 2001	:	
Attorney Docket No.: CE8989R	:	

This is a revised decision on the petition filed on 28 February, 2006, requesting withdrawal of the holding of abandonment under 37 C.F.R. §1.181.

For the reasons set forth below, the petition as considered under 37 C.F.R. §1.181 is **DISMISSED**.

NOTES:

(1) Any petition (and fee) for reconsideration of this decision must be submitted within two (2) months from the mail date of this decision. Extensions of time under 37 C.F.R. §1.136(a) are permitted. The reconsideration request should include a cover letter entitled "Renewed Petition under 37 C.F.R. §1.181."

(If Petitioner is unable to present even a satisfactory showing to support a petition under 37 C.F.R. §1.137(a), and Petitioner's only alternative will be to file a petition under 37 C.F.R. §1.137(b).)

(2) Thereafter, there will be no further reconsideration of this matter.[1]

BACKGROUND

The record reflects that:

- Petitioner failed to reply timely and properly to the drawings requirement contained in the Notice of Allowance and Fees Due and Notice of Allowability mailed on 3 October, 2005, with reply due under a non-extendable deadline on or before3 January, 2006;
- the application went abandoned after midnight 3 January, 2006;
- the Office mailed the Notice of Abandonment on 21 February, 2006;
- on 28 February, 2006, Petitioner filed a the instant petition with the allegation that he had been in contact with the Examiner and that Petitioner's corrected drawings had been filed months earlier on 16 May, 2005.

Such an allegation is not responsive to the issue as to the 3 October, 2005, drawings requirement. Moreover, the allegation as to a conversation with the Examiner is of no merit–Petitioner is reminded of the provisions of 37 C.F.R. §1.2[2]

STATUTES, REGULATIONS AND ANALYSIS

Congress has authorized the Commissioner to "revive an application if the delay is shown to the

---

[1] For more than a century, punctuality and due diligence, equally with good faith, have been deemed essential requisites to the success of those who seek to obtain the special privileges of the patent law, and they are demanded in the interest of the public and for the protection of rival inventors. See: Porter v. Louden, 7 App.D.C. 64 (C.A.D.C. 1895), citing Wollensak v. Sargent, 151 U.S. 221, 228, 38 L. Ed. 137, 14 S. Ct. 291 (1894). An invention benefits no one unless it is made public, and the rule of diligence should be so applied as to encourage reasonable promptness in conferring this benefit upon the public. Automatic Electric Co. v. Dyson, 52 App. D.C. 82; 281 F. 586 (C.A.D.C. 1922). Generally, 35 U.S.C. §6; 37 C.F.R.§§1.181, 182, 183.

[2] The regulations at 37 C.F.R. §1.2 provide:
§1.2 Business to be transacted in writing.
All business with the Patent and Trademark Office should be transacted in writing.The personal attendance of applicants or their attorneys or agents at the Patent and Trademark Office is unnecessary. The action of the Patent and Trademark Office will be based exclusively on the written record in the Office. No attention will be paid to any alleged oral promise, stipulation,or understanding in relation to which there is disagreement or doubt.

satisfaction of the Commissioner to have been "unavoidable." 35 U.S.C. §133 (1994).[3]

The regulations at 37 C.F.R. §1.137(a) and (b) set forth the requirements for a petitioner to revive a previously unavoidably or unintentionally, respectively, abandoned application under this congressional grant of authority. The language of 35 U.S.C. §133 and 37 C.F.R. §1.137(a) is clear, unambiguous, and without qualification: the delay in tendering the reply to the outstanding Office action, as well as filing the first petition seeking revival, must have been unavoidable for the reply now to be accepted on petition.[4]

Delays in responding properly raise the question whether delays are unavoidable.[5] Where there is a question whether the delay was unavoidable, Petitioners must meet the burden of establishing that the delay was unavoidable within the meaning of 35 U.S.C. §133 and 37 C.F.R. §1.137(a).[6] And the Petitioner must be diligent in attending to the matter.[7] Failure to do so does not constitute the care required under Pratt, and so cannot satisfy the test for diligence and due care.

(By contrast, unintentional delays are those that do not satisfy the very strict statutory and regulatory requirements of unavoidable delay, and also, by definition, are not intentional.[8]))

Allegations as to the Request to
Withdraw the Holding of Abandonment

The courts have determined the construct for properly supporting a petition seeking withdrawal of a holding of abandonment.[9]

---

[3] 35 U.S.C. §133 provides:
35 U.S.C. §133 Time for prosecuting application.
Upon failure of the applicant to prosecute the application within six months after any action therein, of which notice has been given or mailed to the applicant, or within such shorter time, not less than thirty days, as fixed by the Commissioner in such action, the application shall be regarded as abandoned by the parties thereto, unless it be shown to the satisfaction of the Commissioner that such delay was unavoidable.

[4] Therefore, by example, an unavoidable delay in the payment of the Filing Fee might occur if a reply is shipped by the US Postal Service, but due to catastrophic accident, the delivery is not made.

[5] See: *Changes to Patent Practice and Procedure; Final Rule Notice*, 62 *Fed. Reg.* at 53158-59 (October 10, 1997), 1203 *Off. Gaz. Pat. Office* at 86-87 (October 21, 1997).

[6] See: In re Application of G, 11 USPQ2d 1378, 1380 (Comm'r Pats. 1989).

[7] See: Diligence in Filing Petitions to Revive and Petitions to Withdraw the Holding of Abandonment, 1124 Off. Gaz. Pat. Office 33 (March 19, 1991). It was and is Petitioner's burden to exercise diligence in seeking either to have the holding of abandonment withdrawn or the application revived. See 1124 Off. Gaz. Pat. Office supra.

[8] Therefore, by example, an unintentional delay in the reply might occur if the reply and transmittal form are to be prepared for shipment by the US Postal Service, but other pressing matters distract one's attention and the mail is not timely deposited for shipment.

[9] See: Delgar v. Schulyer, 172 USPQ 513 (D.D.C. 1971).

The commentary at MPEP §711.03(c) provides:

* * *

B. Petition To Withdraw Holding of Abandonment Based on Evidence That a Reply Was Timely Mailed or Filed

37 C.F.R. §1.10(c) through §1.10(e) and §1.10(g) set forth procedures for petitioning the Director of the USPTO to accord a filing date to correspondence as of the date of deposit of the correspondence as "Express Mail." A petition to withdraw the holding of abandonment relying upon a timely reply placed in "Express Mail" must include an appropriate petition under 37 C.F.R. §1.10(c), (d), * (e), or (g) (see MPEP § 513). When a paper is shown to have been mailed to the Office using the "Express Mail" procedures, the paper must be entered in PALM with the "Express Mail" date.

Similarly, applicants may establish that a reply was filed with a postcard receipt that properly identifies the reply and provides *prima facie* evidence that the reply was timely filed. See MPEP § 503. For example, if the application has been held abandoned for failure to file a reply to a first Office action, and applicant has a postcard receipt showing that an amendment was timely filed in response to the Office action, then the holding of abandonment should be withdrawn upon the filing of a petition to withdraw the holding of abandonment. When the reply is shown to have been timely filed based on a postcard receipt, the reply must be entered into PALM using the date of receipt of the reply as shown on the post card receipt.

<u>Where a certificate of mailing under 37 C.F.R. §1.8, but not a postcard receipt, is relied upon</u> in a petition to withdraw the holding of abandonment, see 37 C.F.R. §1.8(b) and MPEP § 512. As stated in 37 C.F.R §1.8(b)(3) the statement that attests to the previous timely mailing or transmission of the correspondence must be on a personal knowledge basis, or to the satisfaction of the Director of the USPTO. If the statement attesting to the previous timely mailing is not made by the person who signed the Certificate of Mailing (i.e., there is no personal knowledge basis),

> then the statement attesting to the previous timely mailing should include evidence that supports the conclusion that the correspondence was actually mailed (e.g., copies of a mailing log establishing that correspondence was mailed for that application). When the correspondence is shown to have been timely filed based on a certificate of mailing, the correspondence is entered into PALM with the actual date of receipt (i.e., the date that the duplicate copy of the papers was filed with the statement under 37 C.F.R. §1.8).
>
> 37 C.F.R. §1.8(b) also permits applicant to notify the Office of a previous mailing or transmission of correspondence and submit a statement under 37 C.F.R. 1.8(b)(3) accompanied by a duplicate copy of the correspondence when a reasonable amount of time (e.g., more than one month) has elapsed from the time of mailing or transmitting of the correspondence. Applicant does not have to wait until the application becomes abandoned before notifying the Office of the previous mailing or transmission of the correspondence. Applicant should check the private Patent Application Information Retrieval (PAIR) system for the status of the correspondence before notifying the Office. See MPEP § 512.
>
> * * *

Thus, Petitioner appears not to have satisfied the showing requirements described above.

CONCLUSION

Because Petitioner has not satisfied the burdens set forth in Delgar v. Schulyer, the petition as considered under 37 C.F.R. §1.181 hereby is **dismissed**.

ALTERNATIVE VENUE

Petitioner's only alternative to irretrievable abandonment may be petition alleging unintentional delay under 37 C.F.R. §1.137(b).[10]

Petitioner may wish to file such a petition to the Commissioner requesting revival of an application abandoned due to unintentional delay. (See:

[10] The regulations at 37 C.F.R. §1.183 sets forth that waiver of the rules is "subject to such other requirements as may be imposed."

http://www.uspto.gov/web/offices/pac/mpep/documents/0700_711_03_c.htm#sect711.03c)

A petition to revive on the grounds of unintentional delay must be filed promptly and such petition must be accompanied by the reply (the amendment), the petition fee, and a statement that "the entire delay in filing the required reply from the due date for the reply until the filing of a grantable petition was unintentional." (The statement is in the form available online.)

Further correspondence with respect to this matter should be addressed as follows:[11]

By mail: Commissioner for Patents[12]
P.O. Box 1450
Alexandria, VA 22313-1450

By FAX: IFW Formal Filings
(571) 273-8300
ATTN.: Office of Petitions

By hand: Mail Stop: Petition
Customer Service Window
Randolph Building
401 Dulany Street
Alexandria, VA 22314

Telephone inquiries concerning this decision may be directed to the undersigned at (571) 272-3214.

John J. Gillon, Jr.
Senior Attorney
Office of Petitions

Encl. 16 May, 2005, Office action
Form: Petition under 37 C.F.R. §1.137(b)

---

[11] On July 15, 2005, the Central Facsimile (FAX) Number changed to (571) 273-8300. The old FAX number no longer is in service and (571) 273-8300 will be the only facsimile number recognized for centralized delivery. (For further information. see: http://www.uspto.gov/web/offices/pac/dapp/opla/preognotice/cfax062005.pdf .)

[12] To determine the appropriate addresses for other subject-specific correspondence, refer to the USPTO Web site at www.uspto.gov.

UNITED STATES PATENT AND TRADEMARK OFFICE

UNITED STATES DEPARTMENT OF COMMERCE
United States Patent and Trademark Office
Address: COMMISSIONER FOR PATENTS
P.O. Box 1450
Alexandria, Virginia 22313-1450
www.uspto.gov

NOTICE OF ALLOWANCE AND FEE(S) DUE

22917 7590 10/03/2005

MOTOROLA, INC.
1303 EAST ALGONQUIN ROAD
IL01/3RD
SCHAUMBURG, IL 60196

EXAMINER
SAM, PHIRIN

ART UNIT	PAPER NUMBER
2661	

DATE MAILED: 10/03/2005

APPLICATION NO.	FILING DATE	FIRST NAMED INVENTOR	ATTORNEY DOCKET NO.	CONFIRMATION NO.
09/881,337	06/14/2001	John M. Harris	CE08989R	7248

TITLE OF INVENTION: SLOT CYCLE ASSIGNMENT WITHIN A COMMUNICATION SYSTEM

APPLN. TYPE	SMALL ENTITY	ISSUE FEE	PUBLICATION FEE	TOTAL FEE(S) DUE	DATE DUE
nonprovisional	NO	$1400	$300	$1700	01/03/2006

THE APPLICATION IDENTIFIED ABOVE HAS BEEN EXAMINED AND IS ALLOWED FOR ISSUANCE AS A PATEN PROSECUTION ON THE MERITS IS CLOSED. THIS NOTICE OF ALLOWANCE IS NOT A GRANT OF PATENT RIGHT THIS APPLICATION IS SUBJECT TO WITHDRAWAL FROM ISSUE AT THE INITIATIVE OF THE OFFICE OR UPO PETITION BY THE APPLICANT. SEE 37 CFR 1.313 AND MPEP 1308.

THE ISSUE FEE AND PUBLICATION FEE (IF REQUIRED) MUST BE PAID WITHIN THREE MONTHS FROM TH MAILING DATE OF THIS NOTICE OR THIS APPLICATION SHALL BE REGARDED AS ABANDONED. TH STATUTORY PERIOD CANNOT BE EXTENDED. SEE 35 U.S.C. 151. THE ISSUE FEE DUE INDICATED ABOV REFLECTS A CREDIT FOR ANY PREVIOUSLY PAID ISSUE FEE APPLIED IN THIS APPLICATION. THE PTOL-85B (O AN EQUIVALENT) MUST BE RETURNED WITHIN THIS PERIOD EVEN IF NO FEE IS DUE OR THE APPLICATION WIL BE REGARDED AS ABANDONED.

HOW TO REPLY TO THIS NOTICE:

I. Review the SMALL ENTITY status shown above.

If the SMALL ENTITY is shown as YES, verify your current SMALL ENTITY status:

A. If the status is the same, pay the TOTAL FEE(S) DUE shown above.

B. If the status above is to be removed, check box 5b on Part B - Fee(s) Transmittal and pay the PUBLICATION FEE (if required) and twice the amount of the ISSUE FEE shown above, or

If the SMALL ENTITY is shown as NO:

A. Pay TOTAL FEE(S) DUE shown above, or

B. If applicant claimed SMALL ENTITY status before, or is n claiming SMALL ENTITY status, check box 5a on Part B - Fee Transmittal and pay the PUBLICATION FEE (if required) and 1 the ISSUE FEE shown above.

II. PART B - FEE(S) TRANSMITTAL should be completed and returned to the United States Patent and Trademark Office (USPTO) w your ISSUE FEE and PUBLICATION FEE (if required). Even if the fee(s) have already been paid, Part B - Fee(s) Transmittal should completed and returned. If you are charging the fee(s) to your deposit account, section "4b" of Part B - Fee(s) Transmittal should completed and an extra copy of the form should be submitted.

III. All communications regarding this application must give the application number. Please direct all communications prior to issuance Mail Stop ISSUE FEE unless advised to the contrary.

IMPORTANT REMINDER: Utility patents issuing on applications filed on or after Dec. 12, 1980 may require payment maintenance fees. It is patentee's responsibility to ensure timely payment of maintenance fees when due.

PTOL 85 (Rev 07/05) Approved for use through 04/30/2007

PART B - FEE(S) TRANSMITTAL

Complete and send this form, together with applicable fee(s), to: Mail Mail Stop ISSUE FEE
Commissioner for Patents
P.O. Box 1450
Alexandria, Virginia 22313-1450

or Fax (571) 273-2885

INSTRUCTIONS: This form should be used for transmitting the ISSUE FEE and PUBLICATION FEE (if required). Blocks 1 through 5 should be completed wh appropriate. All further correspondence including the Patent, advance orders and notification of maintenance fees will be mailed to the current correspondence address indicated unless corrected below or directed otherwise in Block 1, by (a) specifying a new correspondence address; and/or (b) indicating a separate "FEE ADDRESS" maintenance fee notifications.

CURRENT CORRESPONDENCE ADDRESS (Note: Use Block 1 for any change of address)

22917 7590 10/03/2005

MOTOROLA, INC.
1303 EAST ALGONQUIN ROAD
IL01/3RD
SCHAUMBURG, IL 60196

Note: A certificate of mailing can only be used for domestic mailings of Fee(s) Transmittal. This certificate cannot be used for any other accompany papers. Each additional paper, such as an assignment or formal drawing, m have its own certificate of mailing or transmission.

Certificate of Mailing or Transmission

I hereby certify that this Fee(s) Transmittal is being deposited with the Un States Postal Service with sufficient postage for first class mail in an envel addressed to the Mail Stop ISSUE FEE address above, or being facsim transmitted to the USPTO (571) 273-2885, on the date indicated below.

(Depositor's na

(Signat

(D

APPLICATION NO.	FILING DATE	FIRST NAMED INVENTOR	ATTORNEY DOCKET NO.	CONFIRMATION NO.
09/881,337	06/14/2001	John M. Harris	CE08989R	7248

TITLE OF INVENTION: SLOT CYCLE ASSIGNMENT WITHIN A COMMUNICATION SYSTEM

APPLN. TYPE	SMALL ENTITY	ISSUE FEE	PUBLICATION FEE	TOTAL FEE(S) DUE	DATE DUE
nonprovisional	NO	$1400	$300	$1700	01/03/2006

EXAMINER	ART UNIT	CLASS-SUBCLASS
SAM, PHIRIN	2661	370-345000

1. Change of correspondence address or indication of "Fee Address" (37 CFR 1.363).

☐ Change of correspondence address (or Change of Correspondence Address form PTO/SB/122) attached.

☐ "Fee Address" indication (or "Fee Address" Indication form PTO/SB/47; Rev 03-02 or more recent) attached. **Use of a Customer Number is required.**

2. For printing on the patent front page, list

(1) the names of up to 3 registered patent attorneys or agents OR, alternatively,

(2) the name of a single firm (having as a member a registered attorney or agent) and the names of up to 2 registered patent attorneys or agents. If no name is listed, no name will be printed.

1_____

2_____

3_____

3. ASSIGNEE NAME AND RESIDENCE DATA TO BE PRINTED ON THE PATENT (print or type)

PLEASE NOTE: Unless an assignee is identified below, no assignee data will appear on the patent. If an assignee is identified below, the document has been filed recordation as set forth in 37 CFR 3.11. Completion of this form is NOT a substitute for filing an assignment.

(A) NAME OF ASSIGNEE (B) RESIDENCE: (CITY and STATE OR COUNTRY)

Please check the appropriate assignee category or categories (will not be printed on the patent) : ☐ Individual ☐ Corporation or other private group entity ☐ Governm

4a. The following fee(s) are enclosed:

☐ Issue Fee

☐ Publication Fee (No small entity discount permitted)

☐ Advance Order - # of Copies _____

4b. Payment of Fee(s):

☐ A check in the amount of the fee(s) is enclosed.

☐ Payment by credit card. Form PTO-2038 is attached.

☐ The Director is hereby authorized by charge the required fee(s), or credit any overpayment Deposit Account Number _____ (enclose an extra copy of this form).

5. Change in Entity Status (from status indicated above)

☐ a. Applicant claims SMALL ENTITY status. See 37 CFR 1.27.

☐ b. Applicant is no longer claiming SMALL ENTITY status. See 37 CFR 1.27(g)(2).

The Director of the USPTO is requested to apply the Issue Fee and Publication Fee (if any) or to re-apply any previously paid issue fee to the application identified above. NOTE: The Issue Fee and Publication Fee (if required) will not be accepted from anyone other than the applicant; a registered attorney or agent; or the assignee or other part interest as shown by the records of the United States Patent and Trademark Office.

Authorized Signature _____ Date _____

Typed or printed name _____ Registration No. _____

This collection of information is required by 37 CFR 1.311. The information is required to obtain or retain a benefit by the public which is to file (and by the USPTO to proc an application. Confidentiality is governed by 35 U.S.C. 122 and 37 CFR 1.14. This collection is estimated to take 12 minutes to complete, including gathering, preparing, submitting the completed application form to the USPTO. Time will vary depending upon the individual case. Any comments on the amount of time you require to comp this form and/or suggestions for reducing this burden, should be sent to the Chief Information Officer, U.S. Patent and Trademark Office, U.S. Department of Commerce, P Box 1450, Alexandria, Virginia 22313-1450. DO NOT SEND FEES OR COMPLETED FORMS TO THIS ADDRESS. SEND TO: Commissioner for Patents, P.O. Box 14 Alexandria, Virginia 22313-1450.

Under the Paperwork Reduction Act of 1995, no persons are required to respond to a collection of information unless it displays a valid OMB control number.

UNITED STATES PATENT AND TRADEMARK OFFICE

UNITED STATES DEPARTMENT OF COMMERCE
United States Patent and Trademark Office
Address: COMMISSIONER FOR PATENTS
P.O. Box 1450
Alexandria, Virginia 22313-1450
www.uspto.gov

APPLICATION NO.	FILING DATE	FIRST NAMED INVENTOR	ATTORNEY DOCKET NO.	CONFIRMATION NO.
09/881,337	06/14/2001	John M. Harris	CE08989R	7248

22917 7590 10/03/2005

MOTOROLA, INC.
1303 EAST ALGONQUIN ROAD
IL01/3RD
SCHAUMBURG, IL 60196

EXAMINER
SAM, PHIRIN

ART UNIT	PAPER NUMBER
2661	

DATE MAILED: 10/03/2005

Determination of Patent Term Adjustment under 35 U.S.C. 154 (b)
(application filed on or after May 29, 2000)

The Patent Term Adjustment to date is 934 day(s). If the issue fee is paid on the date that is three months after t mailing date of this notice and the patent issues on the Tuesday before the date that is 28 weeks (six and a ha months) after the mailing date of this notice, the Patent Term Adjustment will be 934 day(s).

If a Continued Prosecution Application (CPA) was filed in the above-identified application, the filing date th determines Patent Term Adjustment is the filing date of the most recent CPA.

Applicant will be able to obtain more detailed information by accessing the Patent Application Information Retriev (PAIR) WEB site (http://pair.uspto.gov).

Any questions regarding the Patent Term Extension or Adjustment determination should be directed to the Office Patent Legal Administration at (571) 272-7702. Questions relating to issue and publication fee payments should directed to the Customer Service Center of the Office of Patent Publication at (703) 305-8283.

PTOL 85 (Rev 07/05) Approved for use through 04/30/2007

Notice of Allowability	Application No.	Applicant(s)	
	09/881,337	HARRIS ET AL.	
	Examiner	Art Unit	
	Phirin Sam	2661	

-- The MAILING DATE of this communication appears on the cover sheet with the correspondence address--

All claims being allowable, PROSECUTION ON THE MERITS IS (OR REMAINS) CLOSED in this application. If not included herewith (or previously mailed), a Notice of Allowance (PTOL-85) or other appropriate communication will be mailed in due course. **THIS NOTICE OF ALLOWABILITY IS NOT A GRANT OF PATENT RIGHTS.** This application is subject to withdrawal from issue at the initiative of the Office or upon petition by the applicant. See 37 CFR 1.313 and MPEP 1308.

1. ☒ This communication is responsive to *05/16/2005*.

2. ☒ The allowed claim(s) is/are *1 and 4-17*.

3. ☐ Acknowledgment is made of a claim for foreign priority under 35 U.S.C. § 119(a)-(d) or (f).
   a) ☐ All b) ☐ Some* c) ☐ None of the:
      1. ☐ Certified copies of the priority documents have been received.
      2. ☐ Certified copies of the priority documents have been received in Application No. _____ .
      3. ☐ Copies of the certified copies of the priority documents have been received in this national stage application from the International Bureau (PCT Rule 17.2(a)).

   * Certified copies not received: _____.

Applicant has THREE MONTHS FROM THE "MAILING DATE" of this communication to file a reply complying with the requirements noted below. Failure to timely comply will result in ABANDONMENT of this application.
THIS THREE-MONTH PERIOD IS NOT EXTENDABLE.

4. ☐ A SUBSTITUTE OATH OR DECLARATION must be submitted. Note the attached EXAMINER'S AMENDMENT or NOTICE OF INFORMAL PATENT APPLICATION (PTO-152) which gives reason(s) why the oath or declaration is deficient.

5. ☒ CORRECTED DRAWINGS (as "replacement sheets") must be submitted.
   (a) ☐ including changes required by the Notice of Draftsperson's Patent Drawing Review (PTO-948) attached
      1) ☐ hereto or 2) ☐ to Paper No./Mail Date _____.
   (b) ☒ including changes required by the attached Examiner's Amendment / Comment or in the Office action of Paper No./Mail Date 02/16/05.

   Identifying indicia such as the application number (see 37 CFR 1.84(c)) should be written on the drawings in the front (not the back) of each sheet. Replacement sheet(s) should be labeled as such in the header according to 37 CFR 1.121(d).

6. ☐ DEPOSIT OF and/or INFORMATION about the deposit of BIOLOGICAL MATERIAL must be submitted. Note the attached Examiner's comment regarding REQUIREMENT FOR THE DEPOSIT OF BIOLOGICAL MATERIAL.

Attachment(s)

1. ☒ Notice of References Cited (PTO-892)
2. ☐ Notice of Draftperson's Patent Drawing Review (PTO-948)
3. ☐ Information Disclosure Statements (PTO-1449 or PTO/SB/08), Paper No./Mail Date _____
4. ☐ Examiner's Comment Regarding Requirement for Deposit of Biological Material
5. ☐ Notice of Informal Patent Application (PTO-152)
6. ☐ Interview Summary (PTO-413), Paper No./Mail Date _____ .
7. ☐ Examiner's Amendment/Comment
8. ☐ Examiner's Statement of Reasons for Allowance
9. ☐ Other _____.

PHIRIN SAM
PRIMARY EXAMINER

PTO/SB/64 (10-05)
Approved for use through 07/31/2006. OMB 0651-0031
U.S. Patent and Trademark Office; U.S. DEPARTMENT OF COMMERCE
Under the Paperwork Reduction Act of 1995, no persons are required to respond to a collection of information unless it displays a valid OMB control number.

PETITION FOR REVIVAL OF AN APPLICATION FOR PATENT ABANDONED UNINTENTIONALLY UNDER 37 CFR 1.137(b)

Docket Number (Optional)

First named inventor:

Application No.: Art Unit:

Filed: Examiner:

Title:

Attention: Office of Petitions
Mail Stop Petition
Commissioner for Patents
P.O. Box 1450
Alexandria, VA 22313-1450
FAX (571) 273-8300

NOTE: If information or assistance is needed in completing this form, please contact Petitions Information at (571) 272-3282.

The above-identified application became abandoned for failure to file a timely and proper reply to a notice or action by the United States Patent and Trademark Office. The date of abandonment is the day after the expiration date of the period set for reply in the office notice or action plus an extensions of time actually obtained.

APPLICANT HEREBY PETITIONS FOR REVIVAL OF THIS APPLICATION

NOTE: A grantable petition requires the following items:
(1) Petition fee;
(2) Reply and/or issue fee;
(3) Terminal disclaimer with disclaimer fee - required for all utility and plant applications filed before June 8, 1995; and for all design applications; and
(4) Statement that the entire delay was unintentional.

1.Petition fee

☐ Small entity-fee $ _____ (37 CFR 1.17(m)). Applicant claims small entity status. See 37 CFR 1.27.

☐ Other than small entity – fee $ _____ (37 CFR 1.17(m))

2. Reply and/or fee

A. The reply and/or fee to the above-noted Office action in the form of _____(identify type of reply):

☐ has been filed previously on _____.
☐ is enclosed herewith.

B. The issue fee and publication fee (if applicable) of $ _____.

☐ has been paid previously on _____.
☐ is enclosed herewith.

This collection of information is required by 37 CFR 1.137(b). The information is required to obtain or retain a benefit by the public which is to file (and by the USPTO to process) an application. Confidentiality is governed by 35 U.S.C. 122 and 37 CFR 1.11 and 1.14. This collection is estimated to take 1.0 hour to complete, including gathering, preparing, and submitting the completed application form to the USPTO. Time will vary depending upon the individual case. Any comments on the amount of time you require to complete this form and/or suggestions for reducing this burden, should be sent to the Chief Information Officer, U.S. Patent and Trademark Office, U.S. Department of Commerce, P.O. Box 1450, Alexandria, VA 22313-1450. DO NOT SEND FEES OR COMPLETED FORMS TO THIS ADDRESS. **SEND TO: Mail Stop Petition, Commissioner for Patents, P.O. Box 1450, Alexandria, VA 22313-1450.**

If you need assistance in completing the form, call 1-800-PTO-9199 and select option 2.

Under the Paperwork Reduction Act of 1995, no persons are required to respond to a collection of information unless it displays a valid OMB control number.

3. Terminal disclaimer with disclaimer fee

☐ Since this utility/plant application was filed on or after June 8, 1995, no terminal disclaimer is required.

☐ A terminal disclaimer (and disclaimer fee (37 CFR 1.20(d)) of $ _____ for a small entity or $ _____ for other than a small entity) disclaiming the required period of time is enclosed herewith (see PTO/SB/63).

4. STATEMENT: The entire delay in filing the required reply from the due date for the required reply until the filing of a grantable petition under 37 CFR 1.137(b) was unintentional. [NOTE: The United States Patent and Trademark Office may require additional information if there is a question as to whether either the abandonment or the delay in filing a petition under 37 CFR 1.137(b) was unintentional (MPEP 711.03(c), subsections (III)(C) and (D)).]

WARNING:

Petitioner/applicant is cautioned to avoid submitting personal information in documents filed in a patent application that may contribute to identity theft. Personal information such as social security numbers, bank account numbers, or credit card numbers (other than a check or credit card authorization form PTO-2038 submitted for payment purposes) is never required by the USPTO to support a petition or an application. If this type of personal information is included in documents submitted to the USPTO, petitioners/applicants should consider redacting such personal information from the documents before submitting them to the USPTO. Petitioner/applicant is advised that the record of a patent application is available to the public after publication of the application (unless a non-publication request in compliance with 37 CFR 1.213(a) is made in the application) or issuance of a patent. Furthermore, the record from an abandoned application may also be available to the public if the application is referenced in a published application or an issued patent (see 37 CFR 1.14). Checks and credit card authorization forms PTO-2038 submitted for payment purposes are not retained in the application file and therefore are not publicly available.

Signature	Date
Typed or printed name	Registration Number, if applicable
Address	Telephone Number
Address	

Enclosures:
☐ Fee Payment
☐ Reply
☐ Terminal Disclaimer Form
☐ Additional sheets containing statements establishing unintentional delay
☐ Other: _____

CERTIFICATE OF MAILING OR TRANSMISSION [37 CFR 1.8(a)]

I hereby certify that this correspondence is being:

☐ Deposited with the United States Postal Service on the date shown below with sufficient postage as first class mail in an envelope addressed to: Mail Stop Petition, Commissioner for Patents, P. O. Box 1450, Alexandria, VA 22313-1450.

☐ Transmitted by facsimile on the date shown below to the United States Patent and Trademark Office as (571) 273-8300.

Date	Signature
	Typed or printed name of person signing certificate

Privacy Act Statement

The **Privacy Act of 1974 (P.L. 93-579)** requires that you be given certain information in connection with your submission of the attached form related to a patent application or patent. Accordingly, pursuant to the requirements of the Act, please be advised that: (1) the general authority for the collection of this information is 35 U.S.C. 2(b)(2); (2) furnishing of the information solicited is voluntary; and (3) the principal purpose for which the information is used by the U.S. Patent and Trademark Office is to process and/or examine your submission related to a patent application or patent. If you do not furnish the requested information, the U.S. Patent and Trademark Office may not be able to process and/or examine your submission, which may result in termination of proceedings or abandonment of the application or expiration of the patent.

The information provided by you in this form will be subject to the following routine uses:

1. The information on this form will be treated confidentially to the extent allowed under the Freedom of Information Act (5 U.S.C. 552) and the Privacy Act (5 U.S.C 552a). Records from this system of records may be disclosed to the Department of Justice to determine whether disclosure of these records is required by the Freedom of Information Act.
2. A record from this system of records may be disclosed, as a routine use, in the course of presenting evidence to a court, magistrate, or administrative tribunal, including disclosures to opposing counsel in the course of settlement negotiations.
3. A record in this system of records may be disclosed, as a routine use, to a Member of Congress submitting a request involving an individual, to whom the record pertains, when the individual has requested assistance from the Member with respect to the subject matter of the record.
4. A record in this system of records may be disclosed, as a routine use, to a contractor of the Agency having need for the information in order to perform a contract. Recipients of information shall be required to comply with the requirements of the Privacy Act of 1974, as amended, pursuant to 5 U.S.C. 552a(m).
5. A record related to an International Application filed under the Patent Cooperation Treaty in this system of records may be disclosed, as a routine use, to the International Bureau of the World Intellectual Property Organization, pursuant to the Patent Cooperation Treaty.
6. A record in this system of records may be disclosed, as a routine use, to another federal agency for purposes of National Security review (35 U.S.C. 181) and for review pursuant to the Atomic Energy Act (42 U.S.C. 218(c)).
7. A record from this system of records may be disclosed, as a routine use, to the Administrator, General Services, or his/her designee, during an inspection of records conducted by GSA as part of that agency's responsibility to recommend improvements in records management practices and programs, under authority of 44 U.S.C. 2904 and 2906. Such disclosure shall be made in accordance with the GSA regulations governing inspection of records for this purpose, and any other relevant (*i.e.*, GSA or Commerce) directive. Such disclosure shall not be used to make determinations about individuals.
8. A record from this system of records may be disclosed, as a routine use, to the public after either publication of the application pursuant to 35 U.S.C. 122(b) or issuance of a patent pursuant to 35 U.S.C. 151. Further, a record may be disclosed, subject to the limitations of 37 CFR 1.14, as a routine use, to the public if the record was filed in an application which became abandoned or in which the proceedings were terminated and which application is referenced by either a published application, an application open to public inspection or an issued patent.
9. A record from this system of records may be disclosed, as a routine use, to a Federal, State, or local law enforcement agency, if the USPTO becomes aware of a violation or potential violation of law or regulation.

UNITED STATES PATENT AND TRADEMARK OFFICE

Commissioner for Patents
United States Patent and Trademark Office
P.O. Box 1450
Alexandria, VA 22313-1450
www.uspto.gov

JJGJR.: 05-06

Paper No:__

MOTOROLA, INC.
1303 EAST ALGONQUIN ROAD
IL01/3RD
SCHAUMBURG IL 60196

COPY MAILED

JUN 0 5 2006

OFFICE OF PETITIONS

In re Application of :
Harris, et al. : DECISION
Application No. 09/881,337 :
Filing Date: 14 June, 2001 :
Attorney Docket No.: CE8989R
:

This is a decision on the petition filed on 10 April, 2006, to revive the application as abandoned due to unintentional delay under 37 C.F.R. §1.137(b).

The petition under 37 C.F.R. §1.137(b) is **GRANTED**.

BACKGROUND

The record reflects that:

- Petitioner failed to reply timely and properly to the drawings requirement contained in the Notice of Allowance and Fees Due and Notice of Allowability mailed on 3 October, 2005, with reply due under a non-extendable deadline on or before3 January, 2006;
- the application went abandoned after midnight 3 January, 2006;
- the Office mailed the Notice of Abandonment on 21 February, 2006;

months earlier on 16 May, 2005–which allegation as to a conversation with the Examiner was of no merit under the provisions of 37 C.F.R. §1.2[1]–and the petition was dismissed on 30 March, 2006, because, *inter alia*, Petitioner had not responded to the Office action in question;

- the instant petition is accompanied by the fee, reply and statement/showing of unintentional delay.

STATUTES, REGULATIONS AND ANALYSIS

Congress has authorized the Commissioner to "revive an application if the delay is shown to the satisfaction of the Commissioner to have been "unavoidable." 35 U.S.C. §133 (1994).[2]

The regulations at 37 C.F.R. §1.137(a) and (b) set forth the requirements for a petitioner to revive a previously unavoidably or unintentionally, respectively, abandoned application under this congressional grant of authority. The language of 35 U.S.C. §133 and 37 C.F.R. §1.137(a) is clear, unambiguous, and without qualification: the delay in tendering the reply to the outstanding Office action, as well as filing the first petition seeking revival, must have been unavoidable for the reply now to be accepted on petition.[3]

Delays in responding properly raise the question whether delays are unavoidable.[4] Where there is a question whether the delay was unavoidable, Petitioners must meet the burden of establishing that the delay was unavoidable within the meaning of 35 U.S.C. §133 and 37 C.F.R. §1.137(a).[5]

---

[1] The regulations at 37 C.F.R. §1.2 provide:
§1.2 Business to be transacted in writing.
All business with the Patent and Trademark Office should be transacted in writing.The personal attendance of applicants or their attorneys or agents at the Patent and Trademark Office is unnecessary. The action of the Patent and Trademark Office will be based exclusively on the written record in the Office. No attention will be paid to any alleged oral promise, stipulation,or understanding in relation to which there is disagreement or doubt.

[2] 35 U.S.C. §133 provides:
35 U.S.C. §133 Time for prosecuting application.
Upon failure of the applicant to prosecute the application within six months after any action therein, of which notice has been given or mailed to the applicant, or within such shorter time, not less than thirty days, as fixed by the Commissioner in such action, the application shall be regarded as abandoned by the parties thereto, unless it be shown to the satisfaction of the Commissioner that such delay was unavoidable.

[3] Therefore, by example, an unavoidable delay in the payment of the Filing Fee might occur if a reply is shipped by the US Postal Service, but due to catastrophic accident, the delivery is not made.

[4] See: *Changes to Patent Practice and Procedure*; *Final Rule Notice*, 62 *Fed. Reg.* at 53158-59 (October 10, 1997), 1203 *Off. Gaz. Pat. Office* at 86-87 (October 21, 1997).

[5] See: In re Application of G, 11 USPQ2d 1378, 1380 (Comm'r Pats. 1989).

And the Petitioner must be diligent in attending to the matter.[6] Failure to do so does not constitute the care required under Pratt, and so cannot satisfy the test for diligence and due care.

(By contrast, unintentional delays are those that do not satisfy the very strict statutory and regulatory requirements of unavoidable delay, and also, by definition, are not intentional.[7]))

Allegations as to
Unintentional Delay

The regulatory requirements are a petition, fee, reply, statement/showing of unintentional delay, and–where appropriate–a terminal disclaimer and fee.

It appears that Petitioner has satisfied the regulatory requirements.

CONCLUSION

The petition under 37 C.F.R. §1.137(b) is **granted**.

The instant application is released to Publications Branch to be processed into a patent in due course.

Telephone inquiries concerning this decision may be directed to the undersigned at (571) 272-3214.

John J. Gillon, Jr.
Senior Attorney
Office of Petitions

---

[6] See: Diligence in Filing Petitions to Revive and Petitions to Withdraw the Holding of Abandonment, 1124 Off. Gaz. Pat. Office 33 (March 19, 1991). It was and is Petitioner's burden to exercise diligence in seeking either to have the holding of abandonment withdrawn or the application revived. See 1124 Off. Gaz. Pat. Office supra.

[7] Therefore, by example, an unintentional delay in the reply might occur if the reply and transmittal form are to be prepared for shipment by the US Postal Service, but other pressing matters distract one's attention and the mail is not timely deposited for shipment.

UNITED STATES PATENT AND TRADEMARK OFFICE

COMMISSIONER FOR PATENTS
UNITED STATES PATENT AND TRADEMARK OFFICE
P.O. BOX 1450
ALEXANDRIA, VA 22313-1450
www.uspto.gov

Paper No. 8

BRADLEY M GANZ PC
P O BOX 10105
PORTLAND OR 97296

COPY MAILED
MAR 1 5 2004
OFFICE OF PETITIONS

In re Application of	:	
Mohit, et al.	:	
Application No. 09/881,353	:	ON PETITION
Filed: June 12, 2001	:	
Attorney Docket No. BIZ/01-0003	:	

This is a decision on the "Petition to Reinstate Abandoned Application", filed February 2, 2004 (Certificate of Mailing dated January 29, 2004), which is being treated as an alternative petition to withdraw the holding of abandonment under 37 CFR 1.181 , petition to revive under 37 CFR 1.137(a), and petition to revive under 37 CFR 1.137(b).

The petition under 37 CFR 1.137(a) is **DISMISSED**.

The petition under 37 CFR 1.181 is **DISMISSED**.

The petition under 37 CFR 1.137(b) is **GRANTED**.

The above-identified application was held abandoned for failure to timely file substitute drawings in response to the Notice to File Missing Parts of Nonprovisional Application mailed August 24, 2001. This Notice set a shortened statutory period for reply of two months. No drawings having been received, the above identified application became abandoned on October 25, 2001. A Notice of Abandonment was mailed on December 17, 2003.

Petition Under 37 CFR 1.181:

A review of the official file reveals that no drawings were filed, since no such drawings are present in the file. An applicant alleging that a paper was filed in the PTO and later misplaced has the burden of proving the allegation by a preponderance of the evidence. Petitioner has supplied no

evidence in the form of an itemized, USPTO date stamped postcard receipt or a transmittal form itemizing drawings in accordance with 37 CFR 1.8. In fact, the transmittal form filed March 4, 2002 (Certificate of Mailing dated February 21, 2002) specifically does **not** itemize drawings.

Petition under 37 CFR 1.137(a):

A grantable petition under 37 CFR 1.137(a) must be accompanied by: (1) the required reply, unless previously filed; (2) the petition fee as set forth in 37 CFR 1.17(l); (3) a showing to the satisfaction of the Commissioner that the entire delay in filing the required reply from the due date for the reply until the filing of a grantable petition pursuant to 37 CFR 1.137(a) was unavoidable; and (4) any terminal disclaimer (and fee as set forth in 37 CFR 1.20(d)) required pursuant to 37 CFR 1.137(d). Decisions on reviving abandoned applications on the basis of "unavoidable" delay have adopted the reasonably prudent person standard in determining if the delay was unavoidable:

> The word 'unavoidable' . . . is applicable to ordinary human affairs, and requires no more or greater care or diligence than is generally used and observed by prudent and careful men in relation to their most important business. It permits them in the exercise of this care to rely upon the ordinary and trustworthy agencies of mail and telegraph, worthy and reliable employees, and such other means and instrumentalities as are usually employed in such important business. If unexpectedly, or through the unforeseen fault or imperfection of these agencies and instrumentalities, there occurs a failure, it may properly be said to be unavoidable, all other conditions of promptness in its rectification being present.[1]

Moreover, a petition cannot be granted where a petitioner has failed to meet his or her burden of establishing that the delay was "unavoidable."[2]

A prudent and careful man in relation to his most important business would have included a postcard receipt in accordance with MPEP 503 to later establish that drawings had been filed.

The petition fees of $55 has been charged to Deposit Account No. 50-1001, as authorized.

Petition Under 37 CFR 1.137(b):

A grantable petition under 37 CFR 1.137(b) must be accompanied by: (1) the required reply, unless previously filed; (2) the

---

[1] In re Mattullath, 38 App. D.C. 497, 514-15 (1912)(quoting Ex parte Pratt, 1887 Dec. Comm'r Pat. 31, 32-33 (1887)); see also Winkler v. Ladd, 221 F. Supp. 550, 552, 138 USPQ 666, 167-68 (D.D.C. 1963), aff'd, 143 USPQ 172 (D.C. Cir. 1963); Ex parte Henrich, 1913 Dec. Comm'r Pat. 139, 141 (1913).

[2] Haines v. Quigg, 673 F. Supp. 314, 316-17, 5 USPQ2d 1130, 1131-32 (N.D. Ind. 1987).

petition fee as set forth in 37 CFR 1.17(m); (3) a statement that the entire delay in filing the required reply from the due date for the reply until the filing of a grantable petition pursuant to 37 CFR 1.137(b) was unintentional; and (4) any terminal disclaimer (and fee as set forth in 37 CFR 1.20(d)) required by 37 CFR 1.137(d).

With the instant petition, applicant paid the petition fee, submitted the required reply in the form of drawings, and made a statement of unintentional delay. 37 CFR 1.137(b)(3) requires a statement that the entire delay in filing the required reply from the due date for the reply until the filing of a grantable petition pursuant to 37 CFR 1.137(b) was unintentional. The statement contained in the instant petition varies from the language required by 37 CFR 1.137(b)(3). The statement contained in the instant petition is being construed as the statement required by 37 CFR 1.137(b)(3). Petitioner must notify the Office if this is **not** a correct interpretation of the statement contained in the instant petition.

The petition fee of $665 has been charged to Deposit Account No. 50-1001, as authorized.

The application is being forwarded to the Office of Initial Patent Examination for pre-examination processing, using the drawings filed on March 4, 2002 (resupplied on petition filed February 2, 2004).

Telephone inquiries related to this decision should be directed to the undersigned at (703) 305-0272.

Cliff Congo
Petitions Attorney
Office of Petitions

UNITED STATES PATENT AND TRADEMARK OFFICE

COMMISSIONER FOR PATENTS
UNITED STATES PATENT AND TRADEMARK OFFICE
P.O. BOX 1450
ALEXANDRIA, VA 22313-1450
www.uspto.gov

Paper No. 5

Bell Boyd & Lloyd
PO Box 1135
Chicago, IL 60690-1135

COPY MAILED

OCT 29 2003

OFFICE OF PETITIONS

In re Application of :
Armstrong et al. :
Application No. 09/881,411 : ON PETITION
Filed: June 14, 2001 :
Attorney Docket No. 11749-00006 :

This is a decision on the petition under 37 CFR 1.137(b) filed October 7, 2003, to revive the above-identified application.

The petition is granted.

The above-identified application became abandoned for failure to reply in a timely manner to the Notice to File Missing Part of Application (Notice) mailed July 9, 2001, which set a shortened statutory period for reply of TWO (2) months from the mail date of the Notice. No extensions of time under the provisions of 37 CFR 1.136 have been obtained. Accordingly, the application became abandoned on September 10, 2001.

The application file is being forwarded to the Office of Initial Patent Examination for further processing.

Telephone inquiries regarding this decision should be directed to Latrice Bond at (703) 308-6911.

Latrice Bond

Latrice Bond
Paralegal Specialist
Office of Petitions
Office of the Deputy Commissioner
for Patent Examination Policy

UNITED STATES PATENT AND TRADEMARK OFFICE

Commissioner for Patents
United States Patent and Trademark Office
P.O. Box 1450
Alexandria, VA 22313-1450
www.uspto.gov

BELL, BOYD & LLOYD, LLC
PO BOX 1135
CHICAGO, IL 60690-1135

COPY MAILED

FEB 1 3 2006

OFFICE OF PETITIONS

In re Application of Zaret et al. :
Application No. 09/881,411 :
Filing Date: June 14, 2001 :
Attorney Docket No. 116210-005 :

Decision on Petition

This is a decision on the petition filed September 8, 2005, which is being treated as a petition under 37 CFR 1.183 to waive the need for the signatures of all the inventors on 37 CFR 1.131 declarations.[1]

The petition is **dismissed**.

37 CFR 1.131(a) states,

> When any claim of an application or a patent under reexamination is rejected, the inventor of the subject matter of the rejected claim, the owner of the patent under reexamination, or the party qualified under §§ 1.42, 1.43, or 1.47, may submit an appropriate oath or declaration to establish invention of the subject matter of the rejected claim prior to the effective date of the reference or activity on which the rejection is based.

The Office has stated the signature requirements of 37 CFR 1.131 can be waived in certain circumstances. For example, the Office may accept an affidavit or declaration signed by fewer than all the inventors upon a showing that equity warrants the relief requested.

Petitioner has failed to demonstrate that Pat O'Donnell has refused to sign the declaration or cannot be found. Therefore, the petition will not be granted.

The petition states a copy of the declaration was given to David Schomberg to forward to O'Donnell. However, a statement by Schomberg verifying O'Donnell was supplied with a copy of the declaration has not been supplied. If Schomberg is unaware of a current address for O'Donnell, then petitioner must make diligent efforts to locate the inventor.

An internet search indicates that Pat O'Donnell <u>may</u> reside at 9311 S 78th Ct, Oak Lawn, IL 60457 or 9837 Mayfield Ave, Oak Lawn, IL 60453. The Office supplies this information as a courtesy and hopes the information assists petitioner in locating the inventor. The Office has not

[1] Once an application has received a fully executed oath or declaration and been placed on the files for examination, the provisions of 37 CFR 1.47 no longer apply. The instant petition is properly treated under 37 CFR 1.183.

verified that the information is correct nor does the information, if inaccurate, release petitioner from the obligation to exercise diligent effort to find O'Donnell.

The $400 petition fee has been charged to petitioner's deposit account.

Any request for reconsideration must be submitted within TWO (2) MONTHS from the mail date of this decision. No further petition fee is required for the request. Extensions of time under 37 CFR 1.136(a) are permitted. The reconsideration request should include a cover letter entitled "Renewed Petition under 37 CFR 1.183." This is **not** final agency action within the meaning of 5 U.S.C. § 704.

Further correspondence with respect to this matter should be addressed as follows:

By mail: Mail Stop Petition
Commissioner for Patents
P.O. Box 1450
Alexandria, VA 22313-1450

By facsimile: (571) 273-8300
Attn: Office of Petitions

By hand: U.S. Patent and Trademark Office
Customer Service Window
Randolph Building
401 Dulany Street
Alexandria, VA 22314

Telephone inquiries regarding this communication should be directed to Petitions Attorney Steven Brantley at (571) 272-3203.

Charles Steven Brantley
Senior Petitions Attorney
Office of Petitions

UNITED STATES PATENT AND TRADEMARK OFFICE

Commissioner for Patents
United States Patent and Trademark Office
P.O. Box 1450
Alexandria, VA 22313-1450
www.uspto.gov

BELL, BOYD & LLOYD, LLC
PO BOX 1135
CHICAGO, IL 60690-1135

COPY MAILED
MAR 1 5 2006
OFFICE OF PETITIONS

In re Application of Zaret et al. :
Application No. 09/881,411 : Decision on Petition
Filing Date: June 14, 2001 :
Attorney Docket No. 116210-005 :

This is a decision on the renewed petition under 37 CFR 1.183 filed March 10, 2006, requesting waiver of the need for the signatures of all the inventors on 37 CFR 1.131 declarations.

The petition is **granted**.

37 CFR 1.131(a) states,

> When any claim of an application or a patent under reexamination is rejected, the inventor of the subject matter of the rejected claim, the owner of the patent under reexamination, or the party qualified under §§ 1.42, 1.43, or 1.47, may submit an appropriate oath or declaration to establish invention of the subject matter of the rejected claim prior to the effective date of the reference or activity on which the rejection is based.

The Office has stated the signature requirements of 37 CFR 1.131 can be waived in certain circumstances. For example, the Office may accept an affidavit or declaration signed by fewer than all the inventors upon a showing that equity warrants the relief requested.

Petitioner has established equity warrants waiver of the requirement for the signatures of Graham Lawlor and Robert Seymour.

Technology Center Art Unit 2157 will be informed of the instant decision and the examiner may further consider the merits of the application in due course.

Telephone inquiries regarding this communication should be directed to Petitions Attorney Steven Brantley at (571) 272-3203.

Charles Steven Brantley
Senior Petitions Attorney
Office of Petitions

UNITED STATES PATENT AND TRADEMARK OFFICE

COMMISSIONER FOR PATENTS
UNITED STATES PATENT AND TRADEMARK OFFICE
WASHINGTON, D.C. 20231
www.uspto.gov
DIW 01-03

Paper No. 6

IANDIORIO & TESKA
260 BEAR HILL ROAD
WALTHAM MA 02451-1018

COPY MAILED

JAN 03 2002

OFFICE OF PETITIONS

In re Application of	:	
Blackham et al.	:	
Application No. 09/881,478	:	DECISION GRANTING PETITION
Filed: 14 June, 2001	:	
Att'y Docket No. GJ-223J	:	

This is a decision on the petition styled under 37 CFR 1.181, filed on 20 December, 2002, which is treated as a petition under 37 CFR 1.53 requesting that the above-identified application be accorded a filing date of 14 June, 2001, with six (6) sheets of drawings as a part of the original disclosure.

On 16 August, 2001, the application was filed.

On 27 November, 2002, Initial Patent Examination Division mailed a "Notice of Incomplete Application" stating that the application had not been accorded a filing date because the application was deposited without drawings and that the filing date of the application would be the date of receipt of the drawings.

In response, on 20 December, 2002, the present petition, a $130.00 petition fee, and, *inter alia*, six (6) sheets of drawings were filed. Petitioner argues that six (6) sheets of drawings were filed with the other application papers on 14 June, 2001, and that the drawings were misplaced in the U.S. Patent and Trademark Office (Office). In support, a copy of petitioners' postcard receipt which shows an Office stamp of 14 June, 2001, and the above-identified application number, and acknowledges receipt of, *inter alia*, "6 pgs. drawings" was supplied with the present petition. Petitioner requests that the application, including six (6) sheets of drawings, be accorded a filing date of 14 June, 2001.

Upon review of the record, no sheets of drawings deposited on 14 June, 2001, have been located among the application papers.

However, the evidence is convincing that the application papers deposited on 14 June, 2001, included six (6) sheets of drawings, which were subsequently misplaced in the USPTO. Therefore, the application, including six (6) sheets of drawings, was complete on filing and entitled to a filing date of 14 June, 2001.

In view of the above, the petition is granted. The six (6) sheets of drawings submitted with the petition will be used for processing and examination purposes. The petition fee is unnecessary and will be refunded to counsel's deposit account, No. 09-0002.

The "Notice" mailed on 27 November, 2002, was sent in error and is hereby withdrawn.

The application is being returned to Initial Patent Examination Division for processing with a filing date of 14 June, 2001, using the application papers filed on that date, and the six (6) sheets of drawings supplied on 20 December, 2002, and for an indication on the bib-data sheet that six (6) sheets of drawings were present on filing.

Telephone inquiries specific to this matter should be directed to the undersigned at 703 308-6918.

D Wood

Douglas I. Wood
Senior Petitions Attorney
Office of Petitions
Office of the Deputy Commissioner
for Patent Examination Policy

UNITED STATES PATENT AND TRADEMARK OFFICE

Commissioner for Patents
United States Patent and Trademark Office
Washington, D.C. 20231
www.uspto.gov

Paper No.

SCHIFF HARDIN & WAITE
PATENT DEPARTMENT
6600 SEARS TOWER
233 SOUTH WACKER DRIVE
CHICAGO, IL 60606-6473

COPY MAILED

JAN 07 2002

OFFICE OF PETITIONS

In re Application of
Dorn, et al.
Application No. 09/881,492
Filed: June 14, 2001
Attorney Docket No. P97,1389 02

DECISION ON PETITION

~~In re Application of~~
Dorn, et al.
~~Application No. 08/883,303~~
~~Filed: June 27, 1997~~
~~Attorney Docket No. P97.1389~~

This is a decision on the "Request for Corrected Filing Receipt" filed August 27, 2001. This request is properly treated as a petition relating to the filing date accorded to an application under 37 CFR 1.53(b)[1].

Application number 09/881,492 ("'492") is a Continuation-In-Part Application of application number 08/883,303 ("'303")[2], presently accorded a filing date of June 28, 1997. Petitioner maintains that parent application '303 was filed on June 27, 1997, and that the Filing Receipt mailed August 14, 2001 in continuing application number '492, showing a filing date of June 28, 1997 in the parent application is in error. With the instant Request for Corrected Filing Receipt, petitioner submits copies of:

- the Filing Receipt mailed August 14, 2001;
- the postcard receipt for the '303 application stamped by the mailroom of the PTO, when the application was hand carried to the patent office, showing a filing date of June 27, 1997;
- a second postcard returned to applicants by mail showing a filing date of June 26, 1997 for '303; and
- the Request for Corrected Filing Receipt filed on December 4, 1997, (certificate of mailing date pursuant to §1.8) in parent application '303.

---

[1] See also MPEP 506.02

[2] 08/883,303 was abandoned effective June 15, 2001.

Pursuant to §1.181(f)[3], any petition filed more than 2 months after the action complained of may be dismissed as untimely. The action complained of here is the according of a filing date of June 28, 1997, to application '303. To show timeliness, petitioner has submitted a copy of a Request for Corrected Filing Receipt, that petitioner maintains was filed on December 4, 1997. A review of the paper reveals that it contains a §1.8(a) certificate of mailing, attesting to the paper being placed in the mail on December 4, 1997. However, a review of the application file for '303 indicates that this paper was never received in the Office. Thus, it is significant that in order to obtain the benefit of a certificate of mailing date under §1.8, where a paper is not received in the Office, an applicant must, among other things, inform the Office of the mailing or transmission of correspondence under §1.8 promptly after becoming aware that the Office has no evidence of receipt of the correspondence[4]. In this instance, several years passed without petitioner informing the Office, by resubmitting the request. Given these facts, the Request for Corrected Filing Receipt filed August 27, 2001, could be, but will not under the circumstances be, considered untimely. Petitioner is advised that in the future such a delay in informing the Office of nonreceipt of a petition may result in the resubmitted petition being dismissed as untimely, without consideration on the merits.

In regards to the merits here, the postcard evidence is controlling. A postcard receipt which itemizes and properly identifies the items which are being filed serves as *prima facie* evidence of receipt in the Office of all items listed thereon on the date stamped thereon by the Office. See MPEP 503. The filing date of an application for patent filed under §1.53(b) is

---

[3] (f) ... Any petition under this part not filed within two months of the mailing date of the action or notice from which relief is requested may be dismissed as untimely, except as otherwise provided. This two-month period is not extendable.

[4] In the event that correspondence is considered timely filed by being mailed or transmitted in accordance with paragraph (a) of this section, but not received in the Patent and Trademark Office, ...and the correspondence will be considered timely if the party who forwarded such correspondence:

(1) Informs the Office of the previous mailing or transmission of the correspondence promptly after becoming aware that the Office has no evidence of receipt of the correspondence;

(2) Supplies an additional copy of the previously mailed or transmitted correspondence and certificate; and

(3) Includes a statement which attests on a personal knowledge basis or to the satisfaction of the Commissioner to the previous timely mailing or transmission. If the correspondence was sent by facsimile transmission, a copy of the sending unit's report confirming transmission may be used to support this statement.

(c) The Office may require additional evidence to determine if the correspondence was timely filed.

the date of receipt in the Office of the application[5]. The postcard receipt identifies this application by attorney docket number, itemizes the correspondence comprising the application currently accorded a filing date of June 28, 1997 as enclosed, and bears a United States Patent and Trademark Office date-stamp of June 27, 1997. Thus, petitioner has provided *prima facie* evidence that application '303 was filed on June 27, 1997.

In view thereof, the petition is **GRANTED**.

Given the basis for granting the petition, no petition fee has been charged.

The '492 and '303 application files are both **being forwarded to OIPE for**:

- correction of the filing date in application number 08/883,303 to June 27, 1997;
- issuance of a corrected filing receipt in application number 09/881,492, indicating a filing date for parent application number 08/883,303 of June 27, 1997; and
- processing of the signed declaration (with surcharge for late filing) filed August 27, 2001, in application number '492, in response to the "Notice to File Missing Parts" mailed August 14, 2001.

Telephone inquiries regarding this decision should be directed to Petitions Attorney Nancy Johnson at (703) 305-0309.

Beverly M. Flanagan
Supervisory Petitions Examiner
Office of Petitions
Office of the Deputy Commissioner
for Patent Examination Policy

---

[5] Provided that the application includes a specification as prescribed by 35 U.S.C. 112 containing a description pursuant to §1.71 and at least one claim pursuant to §1.75, and any drawing required by §1.81(a). The contents of this application are not at issue on instant petition.

UNITED STATES PATENT AND TRADEMARK OFFICE

Commissioner for Patents
United States Patent and Trademark Office
P.O. Box 1450
Alexandria, VA 22313-1450
www.uspto.gov

CYPRESS SEMICONDUCTOR CORPORATION
198 CHAMPION COURT
SAN JOSE CA 95134-1709

COPY MAILED

SEP 1 9 2008

OFFICE OF PETITIONS

In re Application of	:	
Pankaj K. Jha	:	
Application No. 09/881,493	:	ON PETITION
Filed: June 14, 2001	:	
Attorney Docket No. 0325.00482	:	

This is a decision on the petition under 37 CFR 1.137(b), filed January 7, 2008 revive the above-identified application.

The petition is **GRANTED**.

The application became abandoned for failure to reply in a timely manner to the non-final Office action mailed, June 22, 2007, which set a shortened statutory period for reply of three (3) months. No extensions of time under the provisions of 37 CFR 1.136(a) were obtained. Accordingly, the application became abandoned on September 23, 2007. The Notice of Abandonment was mailed January 10, 2008.

The petition satisfies the requirements of 37 CFR 1.137(b) in that petitioner has supplied (1) the reply in the form of an amendment; (2) the petition fee of $1,540; and (3) an adequate statement of unintentional delay.

An extension of time under 37 CFR 1.136 must be filed prior to the expiration of the maximum extendable period for reply. See In re Application of S., 8 USPQ2d 1630, 1631 (Comm'r Pats. 1988). Since the $1,050 extension of time fee submitted with the petition on January 7, 2008 was subsequent to the maximum extendable period for reply, this fee is unnecessary and will be credited to petitioner's deposit account.

Telephone inquiries concerning this decision should be directed to Terri Williams at (571) 272-2991.

The application file is being referred to Technology Center AU 2154 for appropriate action on the concurrently filed amendment.

Chris Bottorff
Petitions Examiner
Office of Petitions

PTO/SB/64 (01-08)
Approved for use through 01/31/2008. OMB 0651-0031
U.S. Patent and Trademark Office; U.S. DEPARTMENT OF COMMERCE
Under the Paperwork Reduction Act of 1995, no persons are required to respond to a collection of information unless it displays a valid OMB control number.

PETITION FOR REVIVAL OF AN APPLICATION FOR PATENT ABANDONED UNINTENTIONALLY UNDER 37 CFR 1.137(b)

Docket Number (Optional) CD01053

First named inventor: Pankaj K. JHA

Application No.: 09/881,493 Art Unit: 2154

Filed: June 14, 2001 Examiner: Haresh N. PATEL

Title: PROGRAMMABLE PROTOCOL PROCESSING ENGINE FOR NETWORK PACKET DEVICES

Attention: Office of Petitions
Mail Stop Petition
Commissioner for Patents
P.O. Box 1450
Alexandria, VA 22313-1450
FAX (571) 273-8300

NOTE: If information or assistance is needed in completing this form, please contact Petitions Information at (571) 272-3282.

The above-identified application became abandoned for failure to file a timely and proper reply to a notice or action by the United States Patent and Trademark Office. The date of abandonment is the day after the expiration date of the period set for reply in the office notice or action plus an extensions of time actually obtained.

APPLICANT HEREBY PETITIONS FOR REVIVAL OF THIS APPLICATION

NOTE: A grantable petition requires the following items:
(1) Petition fee;
(2) Reply and/or issue fee;
(3) Terminal disclaimer with disclaimer fee - required for all utility and plant applications filed before June 8, 1995; and for all design applications; and
(4) Statement that the entire delay was unintentional.

1. Petition fee
☐ Small entity-fee $ _____ (37 CFR 1.17(m)). Applicant claims small entity status. See 37 CFR 1.27.

☑ Other than small entity – fee $ 1540.00 (37 CFR 1.17(m))

2. Reply and/or fee
A. The reply and/or fee to the above-noted Office action in the form of Amendment (identify type of reply):

☐ has been filed previously on _____.
☑ is enclosed herewith.

B. The issue fee and publication fee (if applicable) of $ _____
☐ has been paid previously on _____
☐ is enclosed herewith.

Adjustment date: 09/18/2008 CKHLOK
01/08/2008 INTERSW 00001774 503781 09881493
02:10:1253 1050.00 CR

This collection of information is required by 37 CFR 1.137(b). The information is required to obtain or retain a benefit by the public which is to file (and by the USPTO to process) an application. Confidentiality is governed by 35 U.S.C. 122 and 37 CFR 1.11 and 1.14. This collection is estimated to take 1.0 hour to complete, including gathering, preparing, and submitting the completed application form to the USPTO. Time will vary depending upon the individual case. Any comments on the amount of time you require to complete this form and/or suggestions for reducing this burden, should be sent to the Chief Information Officer, U.S. Patent and Trademark Office, U.S. Department of Commerce, P.O. Box 1450, Alexandria, VA 22313-1450. DO NOT SEND FEES OR COMPLETED FORMS TO THIS ADDRESS. **SEND TO: Mail Stop Petition, Commissioner for Patents, P.O. Box 1450, Alexandria, VA 22313-1450.**

If you need assistance in completing the form, call 1-800-PTO-9199 and select option 2.

Under the Paperwork Reduction Act of 1995, no persons are required to respond to a collection of information unless it displays a valid OMB control number.

3. Terminal disclaimer with disclaimer fee

☑ Since this utility/plant application was filed on or after June 8, 1995, no terminal disclaimer is required.

☐ A terminal disclaimer (and disclaimer fee (37 CFR 1.20(d)) of $ _____ for a small entity or $ _____ for other than a small entity) disclaiming the required period of time is enclosed herewith (see PTO/SB/63).

4. STATEMENT: The entire delay in filing the required reply from the due date for the required reply until the filing of a grantable petition under 37 CFR 1.137(b) was unintentional. [NOTE: The United States Patent and Trademark Office may require additional information if there is a question as to whether either the abandonment or the delay in filing a petition under 37 CFR 1.137(b) was unintentional (MPEP 711.03(c), subsections (III)(C) and (D)).]

WARNING:

Petitioner/applicant is cautioned to avoid submitting personal information in documents filed in a patent application that may contribute to identity theft. Personal information such as social security numbers, bank account numbers, or credit card numbers (other than a check or credit card authorization form PTO-2038 submitted for payment purposes) is never required by the USPTO to support a petition or an application. If this type of personal information is included in documents submitted to the USPTO, petitioners/applicants should consider redacting such personal information from the documents before submitting them to the USPTO. Petitioner/applicant is advised that the record of a patent application is available to the public after publication of the application (unless a non-publication request in compliance with 37 CFR 1.213(a) is made in the application) or issuance of a patent. Furthermore, the record from an abandoned application may also be available to the public if the application is referenced in a published application or an issued patent (see 37 CFR 1.14). Checks and credit card authorization forms PTO-2038 submitted for payment purposes are not retained in the application file and therefore are not publicly available.

Andrew J. Bateman Signature	January 7, 2008 Date
Andrew J. Bateman Typed or printed name	45,573 Registration Number, if applicable
Cypress Semiconductor Corporation Address	408-943-6878 Telephone Number
198 Champion Court, San Jose, CA 95134 Address	

Enclosures: ☑ Fee Payment

☑ Reply

☐ Terminal Disclaimer Form

☐ Additional sheets containing statements establishing unintentional delay

☐ Other: _____

CERTIFICATE OF MAILING OR TRANSMISSION [37 CFR 1.8(a)]

I hereby certify that this correspondence is being:

☐ Deposited with the United States Postal Service on the date shown below with sufficient postage as first class mail in an envelope addressed to: Mail Stop Petition, Commissioner for Patents, P. O. Box 1450, Alexandria, VA 22313-1450.

☐ Transmitted by facsimile on the date shown below to the United States Patent and Trademark Office at (571) 273-8300.

Date	Signature
	Typed or printed name of person signing certificate

UNITED STATES PATENT & TRADEMARK OFFICE
Washington, D.C. 20231

REQUEST FOR PATENT FEE REFUND

1 Date of Request: 09/18/08

2 Serial/Patent # 09/881,493

	3 Please refund the following fee(s):	4 PAPER NUMBER	5 DATE FILED	6 AMOUNT
	Filing			$
	Amendment			$
X	Extension of Time		01/07/08	$ 1,050.00
	Notice of Appeal/Appeal			$
	Petition			$
	Issue			$
	Cert of Correction/Terminal Disc.			$
	Maintenance			$
	Assignment			$
	Other			$

7 TOTAL AMOUNT OF REFUND $ 1,050.00

8 TO BE REFUNDED BY:

	Treasury Check
X	Credit Deposit A/C #:

9 5 0 -- 3 7 8 1

10 REASON:

	Overpayment
	Duplicate Payment
X	No Fee Due (Explanation):

Extension of time unnecessary.

11 REFUND REQUESTED BY:

TYPED/PRINTED NAME: Terri Williams TITLE: Paralegal Specialist

SIGNATURE: Terri Williams PHONE: (571) 272-2991

OFFICE: Office of Petitions

****

THIS SPACE RESERVED FOR FINANCE USE ONLY:

APPROVED: CKhlok DATE: 9/18/08

Instructions for completion of this form appear on the back. After completion, attach white and yellow copies to the official file and mail or hand-carry to:

Office of Finance
Refund Branch
Crystal Park One, Room 802B

FORM PTO 1577
(01/90)

UNITED STATES PATENT AND TRADEMARK OFFICE

Commissioner for Patents
United States Patent and Trademark Office
P.O. Box 1450
Alexandria, VA 22313-1450
www.uspto.gov

AMIN. TUROCY & CALVIN, LLP
24TH FLOOR, NATIONAL CITY CENTER
1900 EAST NINTH STREET
CLEVELAND OH 44114

COPY MAILED
DEC 3 1 2007
OFFICE OF PETITIONS

In re Application of :
Horvitz :
Application No. 09/881,502 : ON PETITION
Filed: June 14, 2001 :
Attorney Docket No. MS150900.12 :

This is a decision on the petition under the unintentional provisions of 37 CFR 1.137(b), filed June 12, 2007, to revive the above-identified application.

The petition is **DISMISSED**.

Any request for reconsideration of this decision must be submitted within TWO (2) MONTHS from the mail date of this decision. Extensions of time under 37 CFR 1.136(a) are permitted. The reconsideration request should include a cover letter entitled "Renewed Petition under 37 CFR 1.137(b)." This is **not** a final agency action within the meaning of 5 U.S.C. § 704.

This application became abandoned as a result of petitioner's failure to take appropriate action in a timely manner after the decision of March 7, 2007 by the Board of Patent Appeals and Interferences. Therefore, the proceedings as to the rejected claims were terminated. *See* 37 CFR 1.197(b). As no claim was allowed, the application became abandoned on May 8, 2007. *See* MPEP 1214.06.

A grantable petition under 37 CFR 1.137(b) must be accompanied by: (1) the required reply, unless previously filed; (2) the petition fee as set forth in 37 CFR 1.17(m); (3) a statement that the entire delay in filing the required reply from the due date for the reply until the filing of a grantable petition pursuant to 37 CFR 1.137(b) was unintentional; and (4) any terminal disclaimer (and fee as set forth in 37 CFR 1.20(d)) required by 37 CFR 1.137(d). Where there is a question as to whether either the abandonment or the delay in filing a petition under 37 CFR 1.137 was unintentional, the Director may require additional information. See MPEP 711.03(c)(II)(C) and (D). The instant petition lacks item (1).

With respect to (1) above, petitioner has not provided a reply. No reply is mentioned in the petition. Any request for reconsideration must be accompanied by a reply. Possible replies after an unfavorable Board Decision include, but are not limited to, a continuing application, a RCE and amendment, and a request for rehearing.

In addition, 37 CFR 1.137(b)(3) requires a statement that "the entire delay in filing the required reply from the due date for the reply until the filing of a grantable petition pursuant to 37 CFR 1.137(b) was unintentional." Since the statement appearing in the petition varies from the language required by 37 CFR 1.137(b)(3), the statement is being construed as the required statement. Petitioner must notify the Office if this is **not** a correct reading of the statement appearing in the petition.

Further correspondence with respect to this matter should be addressed as follows:

By Mail: Mail Stop PETITION
Commissioner for Patents
P. O. Box 1450
Alexandria, VA 22313-1450

By hand: U. S. Patent and Trademark Office
Customer Service Window, Mail Stop Petitions
Randolph Building
401 Dulany Street
Alexandria, VA 22314

The centralized facsimile number is **(571) 273-8300.**

Telephone inquiries concerning this decision should be directed to the undersigned at (571) 272-3230.

Shirene Willis Brantley

Shirene Willis Brantley
Senior Petitions Attorney
Office of Petitions

UNITED STATES PATENT AND TRADEMARK OFFICE

Commissioner for Patents
United States Patent and Trademark Office
P.O. Box 1450
Alexandria, VA 22313-1450
www.uspto.gov

AMIN. TUROCY & CALVIN, LLP
24TH FLOOR, NATIONAL CITY CENTER
1900 EAST NINTH STREET
CLEVELAND OH 44114

COPY MAILED

JUN 20 2008

OFFICE OF PETITIONS

In re Application of	:	
Horvitz	:	
Application No. 09/881,502	:	ON PETITION
Filed: June 14, 2001	:	
Attorney Docket No. MS150900.12	:	

This is a decision on the reconsideration petition under the unintentional provisions of 37 CFR 1.137(b), filed February 29, 2008, to revive the above-identified application.

This application became abandoned as a result of applicant's failure to take appropriate action in a timely manner after the decision of March 7, 2007 by the Board of Patent Appeals and Interferences. Therefore, the proceedings as to the rejected claims were terminated. *See* 37 CFR 1.197(b). As no claim was allowed, the application became abandoned on May 8, 2007. *See* MPEP 1214.06.

Applicant has submitted a RCE and required fee and amendment as his reply, a proper statement of the unintentional nature of the delay, and the petition fee.

The petition is **GRANTED**.

After the mailing of this decision the application will be forwarded to Technology Center AU 2174 for consideration of the RCE and amendment filed on February 29, 2008.

Telephone inquiries pertaining to this decision may be directed to the undersigned at (571) 272-3230.

Shirene Willis Brantley

Shirene Willis Brantley
Senior Petitions Attorney
Office of Petitions

UNITED STATES PATENT AND TRADEMARK OFFICE

Commissioner for Patents
United States Patent and Trademark Office
P.O. Box 1450
Alexandria, VA 22313-1450
www.uspto.gov

Patent No. : 7,133,169
Ser. No. : 09/881,529
Inventor(s) : Terashima et al.
Issued : Nov. 7, 2006
Title : APPARATUS EQUIPPED WITH REMOVABLE SCANNER UNIT

Docket No. : 70214RCE3

Re: Request for Certificate of Correction

Consideration has been given your request for the issuance of a certificate of correction for the above-identified patent under the provisions of Rule(s) 1.322 and/or 1.323.

Assignees' names and addresses (assignment data) printed in a patent, are based *solely* on information supplied in the appropriate space for identifying the assignment data, i.e., item 3 of the Issue Fee Transmittal Form PTOL-85B. Granting of a request under 37 CFR 3.81(b) is required to correct applicant's error providing ***incorrect or erroneous*** assignment data, *before* issuance of a Certificate of Correction, under 37 CFR 1.323 *(see Manual of Patent Examining Procedures (M.P.E.P) Chp.1400, sect. 1481).* This procedure is required *at any time after the issue fee is paid*, including after issuance of the patent.

In view of the foregoing, your request, in this mater, is hereby denied.

A request to correct the Assignee under 37 CFR 3.81(b) should include:

A. **the processing fee set forth in 37 CFR 1.117(h) (currently $130);**
B. a statement that the failure to include the correct assignee name on the PTOL-85B was inadvertent; and
C. a copy of the Notice of Recordation of Assignment Document, reflecting the reel and frame number where the assignment(s) is recorded and/or reflecting proof of *the date* the assignment was submitted for recordation.

In the Request, Applicant(s) may request that the file be forwarded to Certificates of Correction Branch, for issuance of a Certificate of Correction, if the Request is granted.

Any request under 37 CFR 3.81(b) should be directed to the following address or facsimile number:

By mail: Mail Stop PETITIONS
Commissioner for Patents
Post Office Box 1450
Alexandria, VA 22313-1450

By hand: Customer Service Window
Mail Stop Petitions
Randolph Building
401 Dulany Street
Alexandria, VA 22314

By fax: (571) 273-0025
ATTN: Office of Petitions

If a fee (currently $100) was previously submitted for consideration of a Request for Certificate of Correction, under CFR 1.323, to correct assignment data, , no additional fee is required.

Ennis Young
For Mary Diggs
Decisions & Certificates
of Correction Branch
(703) 308-9390 ext. 117 or (703) 308-8309

UNITED STATES PATENT AND TRADEMARK OFFICE

Commissioner for Patents
United States Patent and Trademark Office
P.O. Box 1450
Alexandria, VA 22313-1450
www.uspto.gov

COPY MAILED

MAY 2 0 2009

OFFICE OF PETITIONS

MCGLEW & TUTTLE, PC
P.O. BOX 9227
SCARBOROUGH STATION
SCARBOROUGH NY 10510-9227

In re Patent No. 7,133,169	:	
Issue Date: November 7, 2006	:	
Application No. 09/881,529	:	ON PETITION
Filed: June 14, 2001	:	
Attorney Docket No. 8571	:	

This is a decision on the petition filed October 6, 2008, which is being treated as a request under 37 CFR 3.81(b)[1] to correct the name of the assignee on the front page of the above-identified patent by way of a Certificate of Correction. The delay in responding is regretted; however, the communication was recently referred to the Office of Petitions for consideration.

The request is **GRANTED**.

Petitioner states that an incorrect assignee's name was included on the Fee(s) Transmittal form PTOL-85(b) at the time of payment of the issue fee. Accordingly, petitioner requests that a certificate of correction be issued to reflect the correct assignee on the front page of the Letters Patent.

37 CFR 3.81(b), effective June 25, 2004, reads:

> *After payment of the issue fee:* Any request for issuance of an application in the name of the assignee submitted after the date of payment of the issue fee, and any request for a patent to be corrected to state the name of the assignee, must state that the assignment was submitted for recordation as set forth in § 3.11 before issuance of the patent, and must include a request for a certificate of correction under § 1.323 of this chapter (accompanied by the fee set forth in § 1.20(a) and the processing fee set forth in § 1.17(i) of this chapter.

---

[1] *See* MPEP 1309, subsection II; and Official Gazette of June 22, 2004.

Petitioner has provided a request for a certificate of correction under § 1.323 and the fee required by § 1.20(a); however, the processing fee set forth in § 1.17(i) has not been paid. The $130 processing fee is being charged to counsel's deposit account as authorized. Accordingly, the request complies with the provisions of 37 CFR 3.81(b).

The Certificates of Correction Branch will be notified of this decision granting the petition under 37 CFR 3.81(b) and directing issuance of the requested Certificate of Correction.

Telephone inquiries concerning this decision may be directed to the undersigned at (571) 272-3204. Inquiries regarding the issuance of a certificate of correction should be directed to the Certificate of Correction Branch at (571) 272-4200.

Sherry D. Brinkley
Petitions Examiner
Office of Petitions

UNITED STATES PATENT AND TRADEMARK OFFICE

Commissioner for Patents
United States Patent and Trademark Office
P.O. Box 1450
Alexandria, VA 22313-1450
www.uspto.gov

JOHN F. LETCHFORD
ARCHER & GREINER, P.C.
ONE CENENNIAL SQUARE
HADDONFIELD NJ 08033

COPY MAILED
FEB 0 7 2006
OFFICE OF PETITIONS

In re Application of :
Johnson et al. :
Application No. 09/881,533 : DECISION ON PETITION
Filed: June 14, 2001 :
Attorney Docket No. 11221-0011 :

This is a decision on the petition under 37 CFR 1.181, filed December 12, 2005, to withdraw the holding of abandonment.

On December 23, 2004, the Office mailed a final Office action, which set three-month shortened statutory period to reply. In the apparent absence of a timely and proper response, the Office mailed a Notice of Abandonment on August 23, 2005.

In the present petition, petitioner asserted that a proper response was filed timely in response to the final Office action. In support of the petition, petitioner submitted a copy of a returned, date-stamped postcard receipt, acknowledging receipt of the following: "Appeal notice & Brief in triplicate, Cert. of mailing JFL 2/16/05; Check $500 for appeal notice & brief; Other return postcard" in the USPTO on February 23, 2005. Petitioner included copies of these documents with this petition.

Initially, the Office notes that the postcard receipt indicated an incorrect Application, No. 09/881,553, instead of No. 09/881,533. Notwithstanding this error, the postcard receipt and the response correctly identified the Docket No. 11221-0011 and the attorney of record. Furthermore, the response correctly indicated the first named inventor, the title, the Art Unit, and the examiner's name. Nonetheless, the USPTO has not located the original documents submitted on February 23, 2005, in either Application Nos. 09/881,553 or 09/881,533.[1]

[1] The finance records show that the USPTO received the $500.00 check and allocated the funds to Application No. 09/881,553.

Section 503 of the MPEP states, "[a] post card receipt which itemizes and properly identifies the papers which are being filed serves as *prima facie* evidence of receipt in the USPTO of all the items listed thereon on the date stamped thereon by the USPTO." Accordingly, it is concluded that the response was filed timely in the USPTO on February 23, 2005, but was not matched with the application.

Under current Office procedures, any correspondence that does not contain the proper identification set forth in 37 CFR 1.5(a) will be returned to the sender by OIPE. However, the Office can correct a minor error in the identification of the application provided the correct identification can be quickly discovered. Examples of minor errors are transposed numbers, typographical errors, and listing the parent application number. See MPEP 502. Upon reviewing the postcard receipt and the copies of the documents, it is concluded that there was sufficient information thereon to associate the papers with the present application file.

For the reasons stated above, the Notice of Abandonment is hereby vacated and the holding of abandonment withdrawn.

The petition is **granted.**

The Office finance records will be corrected to indicate that petitioner paid the fees in the amount of $500.00 for the filing of the Notice of Appeal and the Appeal Brief in Application No. 09/881,533, not Application No. 09/881,553.

This matter is being referred to Technology Center Art Unit 3627.

Any questions related to this decision may be directed to the undersigned at (571) 272-3211. All other questions regarding the status of the application or the examination process should be directed to the Technology Center.

Christina Tartera Donnell

Christina Tartera Donnell
Senior Petitions Attorney
Office of Petitions

UNITED STATES PATENT AND TRADEMARK OFFICE

Commissioner for Patents
United States Patent and Trademark Office
P.O. Box 1450
Alexandria, VA 22313-1450
www.uspto.gov

WOODCOCK WASHBURN LLP
ONE LIBERTY PLACE - 46TH FLOOR
PHILADELPHIA PA 19103

COPY MAILED

DEC 2 3 2004

OFFICE OF PETITIONS

In re Application of :
Vasulinga T. Ravikumar :
Application No. 09/881,535 :
Filed: June 14, 2001 :
Attorney Docket No. ISIS-4785 :

ON PETITION

This is a decision on the petition, filed December 16, 2004, under 37 CFR 1.313(c)(3) to withdraw the above-identified application from issue after payment of the issue fee.

The petition is **GRANTED**.

The above-identified application is withdrawn from issue for express abandonment. See 37 CFR 1.313(c)(3). The above-identified application is expressly abandoned in favor of continuing Application No. 10/932,630, filed September 2, 2004.

Telephone inquiries should be directed to the undersigned at (571) 272-3208.

The application will be referred to Files Repository.

Karen Creasy

Karen Creasy
Petitions Examiner
Office of Petitions
Office of the Deputy Commissioner
for Patent Examination Policy

UNITED STATES PATENT AND TRADEMARK OFFICE

COMMISSIONER FOR PATENTS
UNITED STATES PATENT AND TRADEMARK OFFICE
P.O. BOX 1450
ALEXANDRIA, VA 22313-1450
www.uspto.gov

Paper No. 15

RADER FISHMAN & GRAUER PLLC
39533 WOODWARD AVENUE
SUITE 140
BLOOMFIELD HILLS, MI 48304

COPY MAILED

FEB 23 2004

OFFICE OF PETITIONS

In re Application of
Jack D. Patterson
Application No. 09/881,536
Filed: June 14, 2001
Attorney Docket No. 65856-0032 (00-TRN-379)

ON PETITION

This is a decision on the petition under 37 CFR 1.137(b), filed February 13, 2004, to revive the above-identified application.

The petition is **GRANTED**.

The two-month period for filing an appeal brief in triplicate (accompanied by the fee required by 37 CFR 1.17(c)), runs from the date of this decision.

The above-identified application became abandoned for failure to reply within the meaning of 37 CFR 1.113 in a timely manner to the final Office action mailed November 15, 2002, which set a shortened statutory period for reply of three (3) months. No extensions of time under the provisions of 37 CFR 1.136(a) were obtained. Accordingly, the above-identified application became abandoned on February 16, 2003.

Telephone inquiries concerning this decision should be directed to Irvin Dingle at (703) 306-5684.

The application file is being forwarded to Technology Center AU 2831 for further processing.

Irvin Dingle
Petitions Examiner
Office of Petitions
Office of the Deputy Commissioner
for Patent Examination Policy

UNITED STATES PATENT AND TRADEMARK OFFICE

Commissioner for Patents
United States Patent and Trademark Office
P.O. Box 1450
Alexandria, VA 22313-1450
www.uspto.gov

JJGJR.: 04-07

Paper No: __

RADER, FISHMAN & GRAUER PLLC
39533 WOODWARD AVENUE
SUITE 140
BLOOMFIELD HILLS MI 48304-0610

COPY MAILED
APR 23 2007
OFFICE OF PETITIONS

In re Application of	:	
Patterson	:	DECISION
Application No.: 09/881,536	:	
Filing Date: 14 June, 2001	:	
Attorney Docket No. 65856-0032	:	

This is a decision on the petition filed on 27 June, 2006, to revive under 37 C.F.R. §1.137(a), but, in light of the allegations is considered as a request to withdraw the holding of abandonment under 37 C.F.R. §1.181.

The Office regrets the delay in addressing the instant matter, however, it was presented to the attorneys in the Office of Petitions only at this writing.

For the reasons set forth below the petition as considered under 37 C.F.R. §1.181 is **GRANTED**; and the petition under 37 C.F.R. §1.137(a) is **DISMISSED**.

BACKGROUND

The record reflects that:

- the Office mailed the decision of the Board of Patent Appeals and Interferences (BPAI) on 24 January, 2006
- the Office mailed a Notice of Abandonment on 25 April, 2006;

- Petitioner filed the instant petition and alleged unavoidable delay under 37 C.F.R. §1.137(a), and therewith also alleged that the Office had not proceeded pursuant to the guidance of the Manual of Patent Examining Procedure, and specifically the Commentary at MPEP §1214.06.[1]

Out of an abundance of caution, Petitioners always are reminded that the filing of a petition under 37 C.F.R. §1.181 does not toll any periods that may be running any action by the Office and a petition seeking relief under the regulation must be filed within two (2) months of the act complained of (see: 37 C.F.R. §1.181(f)), and those registered to practice *and* all others who make representations before the Office are reminded to inquire into the underlying facts of representations made to the Office and support averments with the appropriate documentation–since all owe to the Office the continuing duty to disclose.[2]

---

[1] Attention is drawn to the Commentary at MPEP §1214.06, to wit:

***

If the Board affirms a rejection against independent claim 1, reverses all rejections against dependent claim 2 and claim 3 is allowed, after expiration of the period for further appeal, the examiner should either:

(A) Convert dependent claim 2 into independent form by examiner's amendment, cancel claim 1 in which the rejection was affirmed, and issue the application with claims 2 and 3; or

(B) Set a 1-month time limit in which appellant may rewrite dependent claim 2 in independent form. Extensions of time under 37 CFR 1.136(a) will not be permitted. If no timely reply is received, the examiner will cancel claims 1 and 2 and issue the application with allowed claim 3 only.

***

[2] See supplement of 17 June, 1999. The Patent and Trademark Office is relying on petitioner's duty of candor and good faith and accepting a statement made by Petitioner. See Changes to Patent Practice and Procedure, 62 Fed. Reg. at 53160 and 53178, 1203 Off. Gaz. Pat. Office at 88 and 103 (responses to comments 64 and 109)(applicant obligated under 37 C.F.R. §10.18 to inquire into the underlying facts and circumstances when providing statements to the Patent and Trademark Office).

Specifically, the regulations at 37 C.F.R. §10.18 provide:

§ 10.18 Signature and certificate for correspondence filed in the Patent and Trademark Office.
(a) For all documents filed in the Office in patent, trademark, and other non-patent matters, except for correspondence that is required to be signed by the applicant or party, each piece of correspondence filed by a practitioner in the Patent and Trademark Office must bear a signature by such practitioner complying with the provisions of §1.4(d), §1.4(e), or § 2.193(c)(1) of this chapter.
(b) By presenting to the Office (whether by signing, filing, submitting, or later advocating) any paper, the party presenting such paper, whether a practitioner or non-practitioner, is certifying that—

(1) All statements made therein of the party's own knowledge are true, all statements made therein on information and belief are believed to be true, and all statements made therein are made with the knowledge that whoever, in any matter within the jurisdiction of the Patent and Trademark Office, knowingly and willfully falsifies, conceals, or covers up by any trick, scheme, or device a material fact, or makes any false, fictitious or fraudulent statements or representations, or makes or uses any false writing or document knowing the same to contain any false, fictitious or fraudulent statement or entry, shall be subject to the penalties set forth under 18 U.S.C. 1001, and that violations of this paragraph may jeopardize the validity of the application or document, or the validity or enforceability of any patent, trademark registration, or certificate resulting therefrom; and

(2) To the best of the party's knowledge, information and belief, formed after an inquiry reasonable under the circumstances, that —

(i) The paper is not being presented for any improper purpose, such as to harass someone or to cause unnecessary delay or needless increase in the cost of prosecution before the Office;

(ii) The claims and other legal contentions therein are warranted by existing law or by a nonfrivolous argument for the extension, modification, or reversal of existing law or the establishment of new law;

(iii) The allegations and other factual contentions have evidentiary support or, if specifically so identified, are likely to have evidentiary support after a reasonable opportunity for further investigation or discovery; and

(iv) The denials of factual contentions are warranted on the evidence, or if specifically so identified, are reasonably based on a lack of

STATUTES, REGULATIONS AND ANALYSIS

Congress has authorized the Commissioner to "revive an application if the delay is shown to the satisfaction of the Commissioner to have been "unavoidable." 35 U.S.C. §133 (1994).[3]

The regulations at 37 C.F.R. §1.137(a) and (b) set forth the requirements for a petitioner to revive a previously unavoidably or unintentionally, respectively, abandoned application under this congressional grant of authority.

The language of 35 U.S.C. §133 and 37 C.F.R. §1.137(a) is clear, unambiguous, and without qualification: the delay in tendering the reply to the outstanding Office action, as well as filing the first petition seeking revival, must have been unavoidable for the reply now to be accepted on petition.[4]

Delays in responding properly raise the question whether delays are unavoidable.[5] Where there is a question whether the delay was unavoidable, Petitioners must meet the burden of establishing that the delay was unavoidable within the meaning of 35 U.S.C. §133 and 37 C.F.R. §1.137(a).[6]

---

information or belief.
(c) Violations of paragraph (b)(1) of this section by a practitioner or non-practitioner may jeopardize the validity of the application or document, or the validity or enforceability of any patent, trademark registration, or certificate resulting therefrom. Violations of any of paragraphs (b)(2)(i) through (iv) of this section are, after notice and reasonable opportunity to respond, subject to such sanctions as deemed appropriate by the Commissioner, or the Commissioner's designee, which may include, but are not limited to, any combination of —
(1) Holding certain facts to have been established;
(2) Returning papers;
(3) Precluding a party from filing a paper, or presenting or contesting an issue;
(4) Imposing a monetary sanction;
(5) Requiring a terminal disclaimer for the period of the delay; or
(6) Terminating the proceedings in the Patent and Trademark Office.
(d) Any practitioner violating the provisions of this section may also be subject to disciplinary action. See § 10.23(c)(15).
[Added 50 FR 5175, Feb. 6, 1985, effective Mar. 8, 1985; para. (a) revised, 58 FR 54494, Oct. 22, 1993, effective Nov. 22, 1993; paras. (a) & (b) revised, paras. (c) & (d) added, 62 FR 53131, Oct. 10, 1997, effective Dec. 1, 1997; para. (a) revised, 69 FR 56481, Sept. 21, 2004, effective Oct. 21, 2004]

[3] 35 U.S.C. §133 provides:
35 U.S.C. §133 Time for prosecuting application.
Upon failure of the applicant to prosecute the application within six months after any action therein, of which notice has been given or mailed to the applicant, or within such shorter time, not less than thirty days, as fixed by the Commissioner in such action, the application shall be regarded as abandoned by the parties thereto, unless it be shown to the satisfaction of the Commissioner that such delay was unavoidable.

[4] Therefore, by example, an unavoidable delay in the payment of the Filing Fee might occur if a reply is shipped by the US Postal Service, but due to catastrophic accident, the delivery is not made.

[5] See: *Changes to Patent Practice and Procedure*; *Final Rule Notice*, 62 *Fed. Reg.* at 53158-59 (October 10, 1997), 1203 *Off. Gaz. Pat. Office* at 86-87 (October 21, 1997).

[6] See: In re Application of G, 11 USPQ2d 1378, 1380 (Comm'r Pats. 1989).

And the Petitioner must be diligent in attending to the matter.[7] Failure to do so does not constitute the care required under Pratt, and so cannot satisfy the test for diligence and due care.

(By contrast, unintentional delays are those that do not satisfy the very strict statutory and regulatory requirements of unavoidable delay, and also, by definition, are not intentional.[8]))

Allegations as to the Request to Withdraw the Holding of Abandonment

The courts have determined the construct for properly supporting a petition seeking withdrawal of a holding of abandonment.[9]

---

[7] See: Diligence in Filing Petitions to Revive and Petitions to Withdraw the Holding of Abandonment, 1124 Off. Gaz. Pat. Office 33 (March 19, 1991). It was and is Petitioner's burden to exercise diligence in seeking either to have the holding of abandonment withdrawn or the application revived. See 1124 Off. Gaz. Pat. Office supra.

[8] Therefore, by example, an unintentional delay in the reply might occur if the reply and transmittal form are to be prepared for shipment by the US Postal Service, but other pressing matters distract one's attention and the mail is not timely deposited for shipment.

[9] See: Delgar v. Schulyer, 172 USPQ 513 (D.D.C. 1971).

Further, the commentary at MPEP §711.03(c) provides:

* * *

A. Petition To Withdraw Holding of Abandonment Based on Failure To Receive Office Action

In *Delgar v. Schulyer*, 172 USPQ 513 (D.D.C. 1971), the court decided that the Office should mail a new Notice of Allowance in view of the evidence presented in support of the contention that the applicant's representative did not receive the original Notice of Allowance. Under the reasoning of *Delgar*, an allegation that an Office action was never received may be considered in a petition to withdraw the holding of abandonment. If adequately supported, the Office may grant the petition to withdraw the holding of abandonment and remail the Office action. That is, the reasoning of *Delgar* is applicable regardless of whether an application is held abandoned for failure to timely pay the issue fee (35 U.S.C. 151) or for failure to prosecute (35 U.S.C. 133). To minimize costs and burdens to practitioners and the Office, the Office has modified the showing required to establish nonreceipt of an Office action. The showing required to establish nonreceipt of an Office communication must include a statement from the practitioner stating that the Office communication was not received by the practitioner and attesting to the fact that a search of the file jacket and docket records indicates that the Office communication was not received. A copy of the docket record where the nonreceived Office communication would have been entered had it been received and docketed must be attached to and referenced in practitioner's statement. For example, if a three month period for reply was set in the nonreceived Office action, a copy of the docket report showing all replies docketed for a date three months from the mail date of the nonreceived Office action must be submitted as documentary proof of nonreceipt of the Office action. * **

The showing outlined above may not be sufficient if there are circumstances that point to a conclusion that the Office action may have been lost after receipt rather than a conclusion that the Office action was lost in the mail (e.g., if the practitioner has a history of not receiving Office actions).

Evidence of nonreceipt of an Office communication or action (e.g., Notice of Abandonment or an advisory action) other than that action to which reply was required to avoid abandonment would not warrant withdrawal of the holding of abandonment. Abandonment takes place by operation of law for failure to reply to an Office action or timely pay the issue fee, not by operation of the mailing of a Notice of Abandonment. See *Lorenz v. Finkl*, 333 F.2d 885, 889-90, 142 USPQ 26, 29-30 (CCPA 1964); *Krahn v. Commissioner*, 15 USPQ2d 1823, 1824 (E.D. Va 1990); *In re Application of Fischer*, 6 USPQ2d 1573, 1574 (Comm'r Pat. 1988). (Emphasis supplied.)

* * *

Thus, it appears that the Office was to act in response to the decision of the BPAI, and the Office may have not done so.

Petitioner appears to have satisfied the showing requirements described above.

CONCLUSION

It appears that Petitioner has satisfied the burdens set forth in Delgar v. Schulyer, and so the petition as considered under 37 C.F.R. §1.181 hereby is **granted**, and the Notice of Abandonment mailed on 25 April, 2006, hereby is **vacated**. Further, the petition under 37 C.F.R. §1.137(a) is **dismissed as moot**.

This application is released to Technology Center 2800 for further processing in due course.

While telephone inquiries regarding this decision may be directed to the undersigned at (571) 272-3214, it is noted that all practice before the Office is in writing (see: 37 C.F.R. §1.2[10]) and the proper authority for action on any matter in this regard are the statutes (35 U.S.C.), regulations (37 C.F.R.) and the commentary on policy (MPEP). Therefore, no telephone discussion may be controlling or considered authority for Petitioner's action(s).

John J. Gillon, Jr.
Senior Attorney
Office of Petitions

---

[10] The regulations at 37 C.F.R. §1.2 provide:
§1.2 Business to be transacted in writing.
All business with the Patent and Trademark Office should be transacted in writing.The personal attendance of applicants or their attorneys or agents at the Patent and Trademark Office is unnecessary. The action of the Patent and Trademark Office will be based exclusively on the written record in the Office. No attention will be paid to any alleged oral promise, stipulation,or understanding in relation to which there is disagreement or doubt.

UNITED STATES PATENT AND TRADEMARK OFFICE

Commissioner for Patents
United States Patent and Trademark Office
PO Box 1450
Arlington, VA 22313-1450
www.uspto.gov

Paper No. 13

John LEZDEY AND ASSOCIATES
SUITE 302
4625 EAST BAY DRIVE
CLEARWATER, FL 33764

COPY MAILED

SEP 1 6 2003

OFFICE OF PETITIONS

ON PETITION

In re Application of	:	
Sming Huang	:	
Application No. 09/881,538	:	
Filed: June 14, 2001	:	
Attorney Docket No. 3008-17	:	

This is a decision on the petition under 37 CFR 1.137(b), filed September 9, 2003, to revive the above-identified application.

The petition is **GRANTED**.

The above-identified application became abandoned for failure to submit the issue fee in a timely manner in reply to the Notice of Allowance mailed September 24, 2002. Accordingly, the application became abandoned on December 25, 2002.

Telephone inquiries concerning this decision should be directed to Latrice Bond at (703) 308-6911.

The application file is being forwarded to Publishing Division.

Latrice Bond
Paralegal Specialist
Office of Petitions
Office of the Deputy Commissioner
for Patent Examination Policy

UNITED STATES PATENT AND TRADEMARK OFFICE

COMMISSIONER FOR PATENTS
UNITED STATES PATENT AND TRADEMARK OFFICE
WASHINGTON, D.C. 20231
www.uspto.gov

Paper No. 6

Jimmy L. Funke
Delphi Technologies, Inc.
PO Box 9005, CT10C
Kokomo, IN 46904-9005

COPY MAILED

MAY 24 2002

OFFICE OF PETITIONS

In re Application of
Charles T. Eytcheson
Application No. 09/881,554
Filed: June 14, 2001
Attorney Docket No. DP-304198

ON PETITION

This is a decision on the petition under 37 CFR 1.137(b), filed April 16, 2002, to revive the above-identified application.

The petition is **GRANTED**.

The above-identified application became abandoned for failure to reply in a timely manner to the Notice to File Missing Parts of Application (Notice) mailed August 10, 2001. The Notice set a period for reply of two (2) months from the mail date of the Notice. No extensions of time under the provisions of 37 CFR 1.136(a) were obtained. Accordingly, the above-identified application became abandoned on October 11, 2001.

The application file is being forwarded to the Office of Initial Patent Examination for further processing.

Telephone inquiries concerning this decision should be directed to Latrice Bond at (703) 308-6911.

Latrice Bond
Paralegal Specialist
Office of Petitions
Office of the Deputy Commissioner
for Patent Examination Policy

Under the Paperwork Reduction Act of 1995, no persons are required to respond to a collection of information unless it displays valid OMB control number.

PETITION TO ACCEPT UNINTENTIONALLY DELAYED PAYMENT OF MAINTENANCE FEE IN AN EXPIRED PATENT (37 CFR 1.378(c))

Patent Number	Issue Date (YYYY-MM-DD)	Application Number	Filing Date (YYYY-MM-DD)	Docket Number (if applicable)
6807723	2004-10-26	09881566	2001-06-13	5333-02000

CAUTION: Maintenance fee (and surcharge, if any) payment must correctly identify: (1) the patent number and (2) the application number of the actual U.S. application leading to issuance of that patent to ensure the fee(s) is/are associated with the correct patent. 37 CFR 1.366(c) and (d).

SMALL ENTITY
☒ Patentee claims, or has previously claimed, small entity status. See 37 CFR 1.27.

LOSS OF ENTITLEMENT TO SMALL ENTITY STATUS
☐ Patentee is no longer entitled to small entity status. See 37 CFR 1.27(g)

NOT Small Entity		Small Entity	
Fee	Code	Fee	Code
○ 3 ½ year	(1551)	◉ 3 ½ year	(2551)
○ 7 ½ year	(1552)	○ 7 ½ year	(2552)
○ 11 ½ year	(1553)	○ 11 ½ year	(2553)

SURCHARGE
The surcharge required by 37 CFR 1.20(i)(2) (Fee Code 1558) must be paid as a condition of accepting unintentionally delayed payment of the maintenance fee.

MAINTENANCE FEE (37 CFR 1.20(e)-(g))
The appropriate maintenance fee must be submitted with this petition.

STATEMENT
THE UNDERSIGNED CERTIFIES THAT THE DELAY IN PAYMENT OF THE MAINTENANCE FEE TO THIS PATENT WAS UNINTENTIONAL

PETITIONER(S) REQUEST THAT THE DELAYED PAYMENT OF THE MAINTENANCE FEE BE ACCEPTED AND THE PATENT REINSTATED

THIS PORTION MUST BE COMPLETED BY THE SIGNATORY OR SIGNATORIES

37 CFR 1.378(d) states: "Any petition under this section must be signed by an attorney or agent registered to practice before the Patent and Trademark Office, or by the patentee, the assignee, or other party in interest."

I certify, in accordance with 37 CFR 1.4(d)(4) that I am

◉ An attorney or agent registered to practice before the Patent and Trademark Office

○ A sole patentee

○ A joint patentee; I certify that I am authorized to sign this submission on behalf of all the other patentees.

○ A joint patentee; all of whom are signing this e-petition

○ The assignee of record of the entire interest

Patent Practitioner			
A signature of the applicant or representative is required in accordance with 37 CFR 1.33 and 10.18. Please see 37 CFR 1.4(d) for the form of the signature			
Signature	/Eric B. Meyertons/	Date (YYYY-MM-DD)	2009-02-18
Name	Eric B. Meyertons	Registration Number	34876

This collection of information is required by 37 CFR 1.378(c). The information is required to obtain or retain a benefit by the public which is to file (and by the USPTO to process) an application. Confidentiality is governed by 35 U.S.C. 122 and 37 CFR 1.11 and 1.14. This collection is estimated to take 1 hour to complete, including gathering, preparing, and submitting the completed application form to the USPTO. Time will vary depending upon the individual case. Any comments on the amount of time you require to complete this form and/ or suggestions for reducing this burden, should be sent to the Chief Information Officer, U.S. Patent and Trademark Office, U.S. Department of Commerce, P.O. Box 1450, Alexandria, VA 22313-1450. DO NOT SEND FEES OR COMPLETED FORMS TO THIS ADDRESS. **This form can only be used when in conjunction with EFS-Web. If this form is mailed to the USPTO, it may cause delays in reinstating the patent.**

Privacy Act Statement

The Privacy Act of 1974 (P.L. 93-579) requires that you be given certain information in connection with your submission of the attached form related to a patent application or patent. Accordingly, pursuant to the requirements of the Act, please be advised that: (1) the general authority for the collection of this information is 35 U.S.C. 2(b)(2); (2) furnishing of the information solicited is voluntary; and (3) the principal purpose for which the information is used by the U.S. Patent and Trademark Office is to process and/or examine your submission related to a patent application or patent. If you do not furnish the requested information, the U.S. Patent and Trademark Office may not be able to process and/or examine your submission, which may result in termination of proceedings or abandonment of the application or expiration of the patent.

The information provided by you in this form will be subject to the following routine uses:

1. The information on this form will be treated confidentially to the extent allowed under the Freedom of Information Act (5 U.S.C. 552) and the Privacy Act (5 U.S.C. 552a). Records from this system of records may be disclosed to the Department of Justice to determine whether the Freedom of Information Act requires disclosure of these record s.

2. A record from this system of records may be disclosed, as a routine use, in the course of presenting evidence to a court, magistrate, or administrative tribunal, including disclosures to opposing counsel in the course of settlement negotiations.

3. A record in this system of records may be disclosed, as a routine use, to a Member of Congress submitting a request involving an individual, to whom the record pertains, when the individual has requested assistance from the Member with respect to the subject matter of the record.

4. A record in this system of records may be disclosed, as a routine use, to a contractor of the Agency having need for the information in order to perform a contract. Recipients of information shall be required to comply with the requirements of the Privacy Act of 1974, as amended, pursuant to 5 U.S.C. 552a(m).

5. A record related to an International Application filed under the Patent Cooperation Treaty in this system of records may be disclosed, as a routine use, to the International Bureau of the World Intellectual Property Organization, pursuant to the Patent Cooperation Treaty.

6. A record in this system of records may be disclosed, as a routine use, to another federal agency for purposes of National Security review (35 U.S.C. 181) and for review pursuant to the Atomic Energy Act (42 U.S.C. 218(c)).

7. A record from this system of records may be disclosed, as a routine use, to the Administrator, General Services, or his/her designee, during an inspection of records conducted by GSA as part of that agency's responsibility to recommend improvements in records management practices and programs, under authority of 44 U.S.C. 2904 and 2906. Such disclosure shall be made in accordance with the GSA regulations governing inspection of records for this purpose, and any other relevant (i.e., GSA or Commerce) directive. Such disclosure shall not be used to make determinations about individuals.

8. A record from this system of records may be disclosed, as a routine use, to the public after either publication of the application pursuant to 35 U.S.C. 122(b) or issuance of a patent pursuant to 35 U.S.C. 151. Further, a record may be disclosed, subject to the limitations of 37 CFR 1.14, as a routine use, to the public if the record was filed in an application which became abandoned or in which the proceedings were terminated and which application is referenced by either a published application, an application open to public inspections or an issued patent.

9. A record from this system of records may be disclosed, as a routine use, to a Federal, State, or local law enforcement agency, if the USPTO becomes aware of a violation or potential violation of law or regulation.

UNITED STATES PATENT AND TRADEMARK OFFICE

Commissioner for Patents
United States Patent and Trademark Office
P.O. Box 1450
Alexandria, VA 22313-1450
www.uspto.gov

In re Patent No. 6807723
Issue Date: October 26,2004
Application No. 09881566
Filed: June 13,2001
Attorney Docket No. 5333-02000

:DECISION GRANTING PETITION
:UNDER 37 CFR 1.378(c)

This is a decision on the electronic petition, filed February 18,2009 ,under 37 CFR 1.378(c) to accept the unintentionally delayed payment of the 3.5 year maintenance fee for the above-identified patent.

The petition is **GRANTED**.

The maintenance fee is accepted, and the above-identified patent reinstated as of February 18,2009 . This decision also constitutes notice that the fee has been accepted. An electronic copy of the petition and this decision has been created as an entry in the Image File Wrapper. Nevertheless, petitioner should print and retain an independent copy.

Telephone inquiries related to this electronic decision should be directed to the Electronic Business Center at 1-866-217-9197.

Under the Paperwork Reduction Act of 1995, no persons are required to respond to a collection of information unless it displays valid OMB control number.

PETITION TO ACCEPT UNINTENTIONALLY DELAYED PAYMENT OF MAINTENANCE FEE IN AN EXPIRED PATENT (37 CFR 1.378(c))

Patent Number	Issue Date (YYYY-MM-DD)	Application Number	Filing Date (YYYY-MM-DD)	Docket Number (if applicable)
6671956	2004-01-06	09881568	2001-06-13	5333-02100

CAUTION: Maintenance fee (and surcharge, if any) payment must correctly identify: (1) the patent number and (2) the application number of the actual U.S. application leading to issuance of that patent to ensure the fee(s) is/are associated with the correct patent. 37 CFR 1.366(c) and (d).

SMALL ENTITY
☒ Patentee claims, or has previously claimed, small entity status. See 37 CFR 1.27.

LOSS OF ENTITLEMENT TO SMALL ENTITY STATUS
☐ Patentee is no longer entitled to small entity status. See 37 CFR 1.27(g)

NOT Small Entity		Small Entity	
Fee	Code	Fee	Code
○ 3 ½ year	(1551)	◉ 3 ½ year	(2551)
○ 7 ½ year	(1552)	○ 7 ½ year	(2552)
○ 11 ½ year	(1553)	○ 11 ½ year	(2553)

SURCHARGE
The surcharge required by 37 CFR 1.20(i)(2) (Fee Code 1558) must be paid as a condition of accepting unintentionally delayed payment of the maintenance fee.

MAINTENANCE FEE (37 CFR 1.20(e)-(g))
The appropriate maintenance fee must be submitted with this petition.

STATEMENT
THE UNDERSIGNED CERTIFIES THAT THE DELAY IN PAYMENT OF THE MAINTENANCE FEE TO THIS PATENT WAS UNINTENTIONAL

PETITIONER(S) REQUEST THAT THE DELAYED PAYMENT OF THE MAINTENANCE FEE BE ACCEPTED AND THE PATENT REINSTATED

THIS PORTION MUST BE COMPLETED BY THE SIGNATORY OR SIGNATORIES

37 CFR 1.378(d) states: "Any petition under this section must be signed by an attorney or agent registered to practice before the Patent and Trademark Office, or by the patentee, the assignee, or other party in interest."

I certify, in accordance with 37 CFR 1.4(d)(4) that I am

◉ An attorney or agent registered to practice before the Patent and Trademark Office

○ A sole patentee

○ A joint patentee; I certify that I am authorized to sign this submission on behalf of all the other patentees.

○ A joint patentee; all of whom are signing this e-petition

○ The assignee of record of the entire interest

Patent Practitioner			
A signature of the applicant or representative is required in accordance with 37 CFR 1.33 and 10.18. Please see 37 CFR 1.4(d) for the form of the signature			
Signature	/Eric B. Meyertons/	Date (YYYY-MM-DD)	2008-11-20
Name	Eric B. Meyertons	Registration Number	34876

This collection of information is required by 37 CFR 1.378(c). The information is required to obtain or retain a benefit by the public which is to file (and by the USPTO to process) an application. Confidentiality is governed by 35 U.S.C. 122 and 37 CFR 1.11 and 1.14. This collection is estimated to take 1 hour to complete, including gathering, preparing, and submitting the completed application form to the USPTO. Time will vary depending upon the individual case. Any comments on the amount of time you require to complete this form and/ or suggestions for reducing this burden, should be sent to the Chief Information Officer, U.S. Patent and Trademark Office, U.S. Department of Commerce, P.O. Box 1450, Alexandria, VA 22313-1450. DO NOT SEND FEES OR COMPLETED FORMS TO THIS ADDRESS. **This form can only be used when in conjunction with EFS-Web. If this form is mailed to the USPTO, it may cause delays in reinstating the patent.**

Privacy Act Statement

The Privacy Act of 1974 (P.L. 93-579) requires that you be given certain information in connection with your submission of the attached form related to a patent application or patent. Accordingly, pursuant to the requirements of the Act, please be advised that: (1) the general authority for the collection of this information is 35 U.S.C. 2(b)(2); (2) furnishing of the information solicited is voluntary; and (3) the principal purpose for which the information is used by the U.S. Patent and Trademark Office is to process and/or examine your submission related to a patent application or patent. If you do not furnish the requested information, the U.S. Patent and Trademark Office may not be able to process and/or examine your submission, which may result in termination of proceedings or abandonment of the application or expiration of the patent.

The information provided by you in this form will be subject to the following routine uses:

1. The information on this form will be treated confidentially to the extent allowed under the Freedom of Information Act (5 U.S.C. 552) and the Privacy Act (5 U.S.C. 552a). Records from this system of records may be disclosed to the Department of Justice to determine whether the Freedom of Information Act requires disclosure of these record s.

2. A record from this system of records may be disclosed, as a routine use, in the course of presenting evidence to a court, magistrate, or administrative tribunal, including disclosures to opposing counsel in the course of settlement negotiations.

3. A record in this system of records may be disclosed, as a routine use, to a Member of Congress submitting a request involving an individual, to whom the record pertains, when the individual has requested assistance from the Member with respect to the subject matter of the record.

4. A record in this system of records may be disclosed, as a routine use, to a contractor of the Agency having need for the information in order to perform a contract. Recipients of information shall be required to comply with the requirements of the Privacy Act of 1974, as amended, pursuant to 5 U.S.C. 552a(m).

5. A record related to an International Application filed under the Patent Cooperation Treaty in this system of records may be disclosed, as a routine use, to the International Bureau of the World Intellectual Property Organization, pursuant to the Patent Cooperation Treaty.

6. A record in this system of records may be disclosed, as a routine use, to another federal agency for purposes of National Security review (35 U.S.C. 181) and for review pursuant to the Atomic Energy Act (42 U.S.C. 218(c)).

7. A record from this system of records may be disclosed, as a routine use, to the Administrator, General Services, or his/her designee, during an inspection of records conducted by GSA as part of that agency's responsibility to recommend improvements in records management practices and programs, under authority of 44 U.S.C. 2904 and 2906. Such disclosure shall be made in accordance with the GSA regulations governing inspection of records for this purpose, and any other relevant (i.e., GSA or Commerce) directive. Such disclosure shall not be used to make determinations about individuals.

8. A record from this system of records may be disclosed, as a routine use, to the public after either publication of the application pursuant to 35 U.S.C. 122(b) or issuance of a patent pursuant to 35 U.S.C. 151. Further, a record may be disclosed, subject to the limitations of 37 CFR 1.14, as a routine use, to the public if the record was filed in an application which became abandoned or in which the proceedings were terminated and which application is referenced by either a published application, an application open to public inspections or an issued patent.

9. A record from this system of records may be disclosed, as a routine use, to a Federal, State, or local law enforcement agency, if the USPTO becomes aware of a violation or potential violation of law or regulation.

UNITED STATES PATENT AND TRADEMARK OFFICE

Commissioner for Patents
United States Patent and Trademark Office
P.O. Box 1450
Alexandria, VA 22313-1450
www.uspto.gov

In re Patent No. 6671956
Issue Date: January 6,2004
Application No. 09881568
Filed: June 13,2001
Attorney Docket No. 5333-02100

:
:DECISION GRANTING PETITION
:UNDER 37 CFR 1.378(c)
:

This is a decision on the electronic petition, filed November 20,2008 ,under 37 CFR 1.378(c) to accept the unintentionally delayed payment of the 3.5 year maintenance fee for the above-identified patent.

The petition is **GRANTED**.

The maintenance fee is accepted, and the above-identified patent reinstated as of November 20,2008 . This decision also constitutes notice that the fee has been accepted. An electronic copy of the petition and this decision has been created as an entry in the Image File Wrapper. Nevertheless, petitioner should print and retain an independent copy.

Telephone inquiries related to this electronic decision should be directed to the Electronic Business Center at 1-866-217-9197.

UNITED STATES PATENT AND TRADEMARK OFFICE

Commissioner for Patents
United States Patent and Trademark Office
P.O. Box 1450
Alexandria, VA 22313-1450
www.uspto.gov

LADAS & PARRY
26 WEST 61ST STREET
NEW YORK, NY 10023

COPY MAILED

AUG 1 0 2004

OFFICE OF PETITIONS

In re Application of	:	
Pushpa Khanna	:	
Application No. 09/881,569	:	ON PETITION
Filed: June 14, 2001	:	
Attorney Docket No. U 013488-3	:	

This is a decision on the petition under 37 CFR 1.55(a), filed May 21, 2004, for entry of priority papers submitted after the date the issue fee was paid.

The petition is **granted**.

Receipt is acknowledged of papers submitted under 35 USC 119.

The priority papers are accepted as timely filed. The papers have been placed of record in the file.

Petitioner is advised that the rule affecting the submission of a claim for priority or a certified priority document under 37 CFR 1.55(a) was changed effective November 7, 2000. In effect, the Office will permit applicants to file a priority claim or certified priority document with the processing fee set forth in 37 CFR 1.17(I) between the date the issue fee is paid and the date a patent is issued. The Office will, however, merely place such submission in the application file but will not attempt to determine whether the applicant has met the conditions of 35 USC 119(a)-(d) to make the priority claim information in the text of the patent. In such a situation, the patent will not contain the priority claim information. The patentee may request a certificate of correction under 35 USC 255 and 1.323 and a determination of entitlement for such priority will be made after the patent is granted. See Federal Register/Vol. 65., No. 175, September 8, 2000, page 54622.

Nevertheless, since the instant petition was associated with the file and was before the deciding official prior to issuance, action on the petition under 37 CFR 1.55(a) has been taken. However, if the printing of the patent has progressed to the point where the priority data cannot be included on the printed patent, petitioner may request a certificate of correction pursuant to the provisions of 37 CFR 1.323 and pay the $100 fee therefor.

This matter is being referred to Publishing Division.

Any inquiries concerning this decision may be directed to Wan Laymon at (703) 306-5685. Any questions concerning the issuance of this application into a patent should be directed Customer Services at (703) 308-6789.

Frances Hicks

Frances Hicks
Lead Petitions Examiner
Office of Petitions
Office of the Deputy Commissioner
for Patent Examination Policy

UNITED STATES PATENT AND TRADEMARK OFFICE

Commissioner for Patents
United States Patent and Trademark Office
P.O. Box 1450
Alexandria, VA 22313-1450
www.uspto.gov

Snell & Wilmer, LLP
One Arizona Center
400 East Van Buren
Phoenix, AZ 85004-2202

COPY MAILED

MAY 06 2005

OFFICE OF PETITIONS

In re Patent No. 6,820,654	:	
Issue Date: November 23, 2004	:	
Application No. 09/881,591	:	NOTICE
Filed: June 14, 2001	:	
Attorney Docket No. 35708.0300	:	

This is a notice regarding your request for acceptance of a fee deficiency submission under 37 CFR 1.28. On September 1, 1998, the Court of Appeals for the Federal Circuit held that 37 CFR 1.28(c) is the sole provision governing the time for correction of the erroneous payment of the issue fee as a small entity. **See DH Technology v. Synergystex International, Inc. 154 F.3d 1333, 47 USPQ2d 1865 (Fed. Cir. Sept. 1, 1998).**

The Office no longer investigates or rejects original or reissue applications under 37 CFR 1.56. **1098 Off. Gaz. Pat. Office 502 (January 3, 1989).** Therefore, nothing in this Notice is intended to imply that an investigation was done.

Your fee deficiency submission under 37 CFR 1.28 is hereby **ACCEPTED**.

This file is being referred to the Files Repository.

Inquiries related to this communication should be directed to the undersigned at (571) 272-3226.

Andrea Smith
Petitions Examiner
Office of Petitions
Office of the Deputy Commissioner
for Patent Examination Policy

UNITED STATES PATENT AND TRADEMARK OFFICE

UNITED STATES DEPARTMENT OF COMMERCE
United States Patent and Trademark Office
Address: COMMISSIONER FOR PATENTS
P.O. Box 1450
Alexandria, Virginia 22313-1450
www.uspto.gov

FITCH EVEN TABIN & FLANNERY
120 SOUTH LASALLE STREET
SUITE 1600
CHICAGO, IL 60603-3406

Mail Date: 04/21/2010

Applicant	: Leo Mark Pedlow JR.	: DECISION ON REQUEST FOR
Patent Number	: 7657913	: RECALCULATION of PATENT
Issue Date	: 02/02/2010	: TERM ADJUSTMENT IN VIEW
Appliction No	: 09/881,609	: OF WYETH AND NOTICE OF INTENT TO
Filed	: 06/14/2001	: ISSUE CERTIFICATE OF CORRECTION
		:

The Request for Recalculation is **GRANTED** to the extent indicated.

The patent term adjustment has been determined to be **2351** days. The USPTO will *sua sponte* issue a certificate of correction reflecting the amount of PTA days determined by the recalculation.

Prior to the issuance of the certificate of correction, the USPTO will afford patentee an opportunity to be heard and request reconsideration. Accordingly, patentee has **one month or thirty (30) days**, whichever is longer, to file a request for reconsideration of this patent term adjustment calculation. See 35 U.S.C. 154(b)(3)(B)(ii) and 37 CFR 1.322(a)(4). No extensions of time will be granted under 37 CFR 1.136.

Patentee should use document code PET.OP if electronically filing a request for reconsideration of this patent term adjustment calculation. The patentee must also include the information required by 37 CFR 1.705(b)(2) and the fee required by 37 CFR 1.18(e). If patentee does not file a timely request for reconsideration of this patent term adjustment calculation including the information required by 37 CFR 1.705(b)(2) and the fee required by 37 CFR 1.18(e), the USPTO will issue a certificate of correction reflecting the PTA determination noted above.

Patentee should be aware that in order to preserve the right to review in the United States District Court for the District of Columbia of the USPTO patent term adjustment determination, patentee must ensure that he or she also take the steps required under 35 U.S.C. 154(b)(4)(A) in a timely manner. Nothing in the request for recalculation should be construed as providing an alternative time frame for commencing a civil action under 35 U.S.C. 154(b)(4)(A).

Any questions concerning this decision should be directed to the Office of Patent Legal Administration at 571-272-7702.

UNITED STATES PATENT AND TRADEMARK OFFICE

COMMISSIONER FOR PATENTS
UNITED STATES PATENT AND TRADEMARK OFFICE
P.O. BOX 1450
ALEXANDRIA, VA 22313-1450
www.uspto.gov

MONIKA DUDEK
MCDONNELL BOEHNEN HULBERT & BERGHOFF
32ND FLOOR
300 S. WACKER DRIVE
CHICAGO, IL 60606

COPY MAILED

NOV 15 2005

OFFICE OF PETITIONS

In re Application of :
Gregory K. Lewis et al :
Application No. 09/881,649 :
Filed: June 14, 2001 :
Attorney Docket No. MBHB 01-469 :

DECISION ON PETITION
UNDER 37 CFR 1.137(b)

This is a decision on the petition, filed October 11, 2005, which is being treated as a petition under 37 CFR 1.137(b) to revive the instant nonprovisional application for failure to timely notify the U.S. Patent and Trademark (USPTO) of the filing of an application in a foreign country, or under a multinational treaty that requires publication of applications eighteen months after filing. See 37 CFR 1.137(f).

The petition is **GRANTED**.

Petitioner states that the instant nonprovisional application is the subject of an application filed in an eighteen months publication country on June 14, 2002. However, the USPTO was unintentionally not notified of this filing within 45 days subsequent to the filing of the subject application in an eighteen months publication country.

In view of the above, this application became abandoned pursuant to 35 U.S.C. § 122(b)(2)(B)(iii) and 37 CFR 1.213(c) for failure to timely notify the Office of the filing of an application in a foreign country, or under a multilateral international agreement, that requires publication of applications 18 months after filing.

A petition to revive an application abandoned pursuant to 35 U.S.C. 122(b)(2)(B)(iii) for failure to notify the USPTO of a foreign filing must be accompanied by:

(1) the required reply which is met by the notification of such filing in a foreign country or under a multinational treaty;

(2) the petition fee as set forth in 37 CFR 1.17(m); and

(3) a statement that the entire delay in filing the required reply from the due date of the reply until the filing of a grantable petition was unintentional.

The instant petition has been found to be in compliance with 37 CFR 1.137(b). Accordingly, the failure to timely notify the USPTO of a foreign or international filing within 45 days after the date of filing of

such foreign or international application as provided by 35 U.S.C. § 122(b)(2)(B)(iii) and 37 CFR 1.213(c) is accepted as having been unintentionally delayed.

The previous Request and Certification under 35 U.S.C. § 122 (b) (2) (B) (i) has been rescinded. A Notice Regarding Rescission of Nonpublication Request which sets forth the projected publication date will be mailed in a separate correspondence.

Any inquiries concerning this decision may be directed to Irvin Dingle at (571) 272-3210.

This matter is being referred to Technology Center AU 2664 for examination in due course.

Irvin Dingle
Petitions Examiner
Office of Petitions

UNITED STATES PATENT AND TRADEMARK OFFICE

COMMISSIONER FOR PATENTS
UNITED STATES PATENT AND TRADEMARK OFFICE
WASHINGTON, D.C. 20231
www.uspto.gov

Paper No. 6

GIBSON, DUNN & CRUTCHER LLP
SUITE 4100
1801 CALIFORNIA STREET
DENVER CO 80202-2641

COPY MAILED

MAR 0 3 2003

OFFICE OF PETITIONS

ON PETITION

In re Application of
John Funk et al.
Application No. 09/881,658
Filed: June 15, 2001
Attorney Docket No. 26372-00001

This is a decision on the petition filed March 25, 2002, to revive the above identified application under 37 CFR 1.137(b).[1]

The petition is **GRANTED**.

This application became abandoned on October 11, 2001, for failure to file a timely response to the Notice to File Missing Parts "Notice" mailed August 10, 2001, which set a two (2) month shortened statutory period for reply. No extensions of the time for reply under 37 CFR 1.136(a) were obtained. No Notice of Abandonment has been mailed.

This application file is being forwarded to the Office of Initial Patent Examination for further processing.

Telephone inquiries concerning this matter may be directed to the undersigned Petitions Attorney at (703) 305-4497.

Patricia Faison-Ball

Patricia Faison-Ball
Senior Petitions Attorney
Office of Petitions

---

[1]Effective December 1, 1997, the provisions of 37 CFR 1.137(b) now provide that where the delay in reply was unintentional, a petition may be filed to revive an abandoned application or a lapsed patent pursuant to 37 CFR 1.137(b). A grantable petition filed under the provisions of 37 CFR 1.137(b) must be accompanied by:

(1) the required reply, unless previously filed. In a nonprovisional application abandoned for failure to prosecute, the required reply may be met by the filing of a continuing application. In a nonprovisional utility or plant application filed on or after June 8, 1995, and abandoned for failure to prosecute, the required reply may also be met by the filing of a request for continued examination in compliance with § 1.114. In an application or patent, abandoned or lapsed for failure to pay the issue fee or any portion thereof, the required reply must be the payment of the issue fee or any outstanding balance thereof.

(2) the petition fee as set forth in 37 CFR 1.17(m);

(3) a statement that the entire delay in filing the required reply from the due date for the reply until the filing of a grantable petition pursuant to 37 CFR 1.137(b) was unintentional. The Commissioner may required additional information where there is a question whether the delay was unintentional; and

(4) any terminal disclaimer (and fee as set forth in 37 CFR 1.20(d)) required pursuant to 37 CFR 1.137(c)).

UNITED STATES PATENT AND TRADEMARK OFFICE

COMMISSIONER FOR PATENTS
UNITED STATES PATENT AND TRADEMARK OFFICE
P.O. BOX 1450
ALEXANDRIA, VA 22313-1450
www.uspto.gov

LEYDIG VOIT & MAYER
700 THIRTEENTH ST NW
SUITE 300
WASHINGTON, DC 20005-3960

COPY MAILED

OCT 2 2 2003

OFFICE OF PETITIONS

In re Application of
Seiki Gotou et al
Application No. 09/881,665
Filed: June 18, 2001
Attorney Docket No. 401256

ON PETITION

This is a decision on the petition under 37 CFR 1.137(b), filed September 30, 2003, to revive the above-identified application.

The petition is **GRANTED**.

The two-month period for filing an appeal brief in triplicate (accompanied by the fee required by 37 CFR 1.17(c)), runs from the date of this decision.

The above-identified application became abandoned for failure to reply within the meaning of 37 CFR 1.113 in a timely manner to the final Office action mailed March 26, 2003, which set a shortened statutory period for reply of three (3) months. A reply under 37 CFR 1.113 is limited to an amendment that *prima facie* places the application in condition for allowance, a Notice of Appeal (and appeal fee required by 37 CFR 1.17(b)), or the filing of acontinuing application. Since the amendment submitted does not *prima facie* placing the application in condition for allowance, no Notice of Appeal (and appeal fee), or the filing of a continuing application was timely filed. Extensions of time under the provisions of 37 CFR 1.136(a) were obtained. Accordingly, the above-identified application became abandoned on July 26, 2003.

Telephone inquiries concerning this decision should be directed to Wan Laymon at (703) 305-9282.

Wan Laymon
Petitions Examiner
Office of Petitions
Office of the Deputy Commissioner
for Patent Examination Policy

1 mag 8

DAC. #

OIPE JC98 SEP 30 2003 PATENT & TRADEMARK OFFICE

PATENT
Attorney Docket No. 401256

IN THE UNITED STATES PATENT AND TRADEMARK OFFICE

In re Appln. of:

GOTOU et al.

Application No. 09/881,665

Filed: June 18, 2001

For: HIGH FREQUENCY POWER AMPLIFIER

Art Unit: 2817

Examiner: H. Choe

PETITION PURSUANT TO 37 CFR 1.137(b) TO REVIVE AN UNINTENTIONALLY ABANDONED APPLICATION

Mail Stop
Commissioner for Patents
P.O. Box 1450
Alexandria, VA 22313-1450

Dear Sir:

The referenced application was unintentionally abandoned by failing to file a Notice of Appeal by September 26, 2003. Because of an unintentional error in our docketing department, which listed the final deadline as September 29, 2003, the Notice of Appeal was filed on September 29 instead of the due date of September 26, 2003. The entire period of delay from the deadline of September 26, 2003 until the filing of this Petition was unintentional.

Applicants petition to revive this application pursuant to 37 CFR 1.137(b) and submit the appropriate fee pursuant to 37 CFR 1.17(m).

The Commissioner is authorized to charge any extension of time fees pursuant to 37 CFR 1.17(a)-(d) associated with this communication and to credit any excess payment to Deposit Account No. 12-1216. A duplicate copy of this Response is attached.

10/01/2003 SSESHE1 00000236 121216 09881665
01 FC:1453 1300.00 DA

Respectfully submitted,

Jeffrey A. Wyand, Reg. No. 29,458
LEYDIG, VOIT & MAYER
700 Thirteenth Street, N.W., Suite 300
Washington, DC 20005-3960
(202) 737-6770 (telephone)
(202) 737-6776 (facsimile)

Date: Sept 30, 2003
JAW:ves

82 Image

OIPE JC174
SEP 2 9 2003
PATENT & TRADEMARK OFFICE

AF

PATENT
Attorney Docket No. 401256/TAKADA

IN THE UNITED STATES PATENT AND TRADEMARK OFFICE

In re Application of:

GOTOU et al.

Application No. 09/881,665

Filed: June 18, 2001

Art Unit: 2817

Examiner: H. Choe

For: HIGH FREQUENCY POWER AMPLIFIER

NOTICE OF APPEAL FROM THE EXAMINER TO THE BOARD OF PATENT APPEALS AND INTERFERENCES

Mail Stop AF
Commissioner for Patents
P.O. Box 1450
Alexandria, VA 22313-1450

Dear Sir:

Applicants hereby appeal to the Board of Patent Appeals and Interferences from the decision of the Examiner mailed March 26, 2003, rejecting the following claims: 5-8.

The items checked below are appropriate:

1. Status of Applicants

This application is on behalf of ☒ other than a small entity or ☐ a small entity.

2. Fee for Filing Notice of Appeal

Pursuant to 37 CFR 1.17(b), the fee for filing the Notice of Appeal is for: ☒ other than a small entity or ☐ a small entity.

Notice of Appeal Fee due $320.00

3. Extension of Time

☒ Applicants petition for a three-month extension of time under 37 CFR 1.136, the fee for which is $930.00.

☒ An extension for one month has already been secured and the fee paid therefore of $110.00 is deducted from the total fee due for the total amounts of extension now requested.

10/01/2003 SSESHE1 00000027 122226 09881665

01 FC:1401 320.00 DA
02 FC:1253 930.00 DA

Docket No. 225784US0

OIPE JC174
SEP 2 9 2003
PATENT & TRADEMARK OFFICE

IN THE UNITED STATES PATENT AND TRADEMARK OFFICE

IN RE APPLICATION OF: Yuichi SUZUKI, et al.

SERIAL NO: 10/198,571 GAU: 1626

FILED: July 19, 2002 EXAMINER: ANDERSON, R.L.

FOR: PRODUCTION METHOD OF PYRROLIDONE CARBOXYLIC ACID AND SALT THEREOF

REQUEST FOR EXTENSION OF TIME UNDER 37 C.F.R. 1.136

COMMISSIONER FOR PATENTS
ALEXANDRIA, VIRGINIA 22313

SIR:

It is hereby requested that a **two** month extension of time be granted to September 29, 2003 for

- ☐ filing a response to the Official Action dated:
- ☐ responding to the requirements in the Notice of Allowability dated:
- ☐ filing the Formal Drawings. The Issue Fee due has been timely filed.
- ☐ responding to the Notice to File Missing Parts of Application dated:
- ■ filing a Notice of Appeal. A timely response to the final rejection, due July 29, 2003 has been filed.
- ☐ filing an Appeal Brief. A Notice of Appeal was filed on:
- ☐ Applicant claims small entity status. See 37 CFR 1.27. Therefore, the fee amount shown below is reduced by one-half.

The required fee of $410.00 is enclosed herewith by credit card payment form and any further charges may be made against the Attorney of Record's Deposit Account No. **15-0030**. A duplicate copy of this sheet is enclosed.

Respectfully Submitted,

OBLON, SPIVAK, McCLELLAND,
MAIER & NEUSTADT, P.C.

Stephen G. Baxter, Ph.D.
Registration No. 32,884

Vincent K. Shier, Ph.D.
Registration No. 50,552

Customer Number
22850
Tel. (703) 413-3000
Fax. (703) 413-2220
(OSMMN 05/03)

10/01/2003 SSESHE1 00000023 10198571
02 FC:1252 410.00 OP

UNITED STATES PATENT AND TRADEMARK OFFICE

UNITED STATES DEPARTMENT OF COMMERCE
United States Patent and Trademark Office
Address: COMMISSIONER OF PATENTS AND TRADEMARKS
Washington, D.C. 20231
www.uspto.gov

APPLICATION NO.	FILING DATE	FIRST NAMED INVENTOR	ATTORNEY DOCKET NO.	CONFIRMATION NO.
09/881,665	06/18/2001	Seiki Gotou	401256	7187

23548 7590 03/26/2003

LEYDIG VOIT & MAYER, LTD
700 THIRTEENTH ST. NW
SUITE 300
WASHINGTON, DC 20005-3960

EXAMINER
CHOE, HENRY

ART UNIT	PAPER NUMBER
2817	

DATE MAILED: 03/26/2003

Please find below and/or attached an Office communication concerning this application or proceeding.

Office Action Summary	Application No. 09/881,665	Applicant(s) Gotou et al.
	Examiner Henry Choe	Art Unit 2817

-- The MAILING DATE of this communication appears on the cover sheet with the correspondence address --

Period for Reply

A SHORTENED STATUTORY PERIOD FOR REPLY IS SET TO EXPIRE 3 MONTH(S) FROM THE MAILING DATE OF THIS COMMUNICATION.

- Extensions of time may be available under the provisions of 37 CFR 1.136 (a). In no event, however, may a reply be timely filed after SIX (6) MONTHS from the mailing date of this communication.
- If the period for reply specified above is less than thirty (30) days, a reply within the statutory minimum of thirty (30) days will be considered timely.
- If NO period for reply is specified above, the maximum statutory period will apply and will expire SIX (6) MONTHS from the mailing date of this communication.
- Failure to reply within the set or extended period for reply will, by statute, cause the application to become ABANDONED (35 U.S.C. § 133).
- Any reply received by the Office later than three months after the mailing date of this communication, even if timely filed, may reduce any earned patent term adjustment. See 37 CFR 1.704(b).

Status

1) ☒ Responsive to communication(s) filed on *Mar 3, 2003*.

2a) ☒ This action is **FINAL**. 2b) ☐ This action is non-final.

3) ☐ Since this application is in condition for allowance except for formal matters, prosecution as to the merits is closed in accordance with the practice under *Ex parte Quayle*, 1935 C.D. 11; 453 O.G. 213.

Disposition of Claims

4) ☒ Claim(s) *1, 2, and 5-9* is/are pending in the application.

4a) Of the above, claim(s) *9* is/are withdrawn from consideration.

5) ☒ Claim(s) *1 and 2* is/are allowed.

6) ☒ Claim(s) *5-8* is/are rejected.

7) ☐ Claim(s) _____ is/are objected to.

8) ☐ Claims _____ are subject to restriction and/or election requirement.

Application Papers

9) ☐ The specification is objected to by the Examiner.

10) ☐ The drawing(s) filed on _____ is/are a) ☐ accepted or b) ☐ objected to by the Examiner.

Applicant may not request that any objection to the drawing(s) be held in abeyance. See 37 CFR 1.85(a).

11) ☐ The proposed drawing correction filed on _____ is: a) ☐ approved b) ☐ disapproved by the Examiner.

If approved, corrected drawings are required in reply to this Office action.

12) ☐ The oath or declaration is objected to by the Examiner.

Priority under 35 U.S.C. §§ 119 and 120

13) ☐ Acknowledgement is made of a claim for foreign priority under 35 U.S.C. § 119(a)-(d) or (f).

a) ☐ All b) ☐ Some* c) ☐ None of:

1. ☐ Certified copies of the priority documents have been received.
2. ☐ Certified copies of the priority documents have been received in Application No. _____.
3. ☐ Copies of the certified copies of the priority documents have been received in this National Stage application from the International Bureau (PCT Rule 17.2(a)).

*See the attached detailed Office action for a list of the certified copies not received.

14) ☐ Acknowledgement is made of a claim for domestic priority under 35 U.S.C. § 119(e).

a) ☐ The translation of the foreign language provisional application has been received.

15) ☐ Acknowledgement is made of a claim for domestic priority under 35 U.S.C. §§ 120 and/or 121.

Attachment(s)

1) ☐ Notice of References Cited (PTO-892)
2) ☐ Notice of Draftsperson's Patent Drawing Review (PTO-948)
3) ☐ Information Disclosure Statement(s) (PTO-1449) Paper No(s). _____
4) ☐ Interview Summary (PTO-413) Paper No(s). _____
5) ☐ Notice of Informal Patent Application (PTO-152)
6) ☐ Other:

UNITED STATES PATENT AND TRADEMARK OFFICE

COMMISSIONER FOR PATENTS
UNITED STATES PATENT AND TRADEMARK OFFICE
P.O. BOX 1450
ALEXANDRIA, VA 22313-1450
WWW.USPTO.GOV

Paper No. None

Louis M. Heidelberger
Reed Smith LLP
2500 One Liberty Place
Philadelphia PA 19103-7301

COPY MAILED

MAR 12 2007

OFFICE OF PETITIONS

In re Application of :
Vincent Chern :
Application No. 09/881,671 :
Filed: June 18, 2001 :
Attorney Docket No.: 50310-00671 :
Title: VOICE ATTACHMENT TO AN EMAIL USING A WIRELESS COMMUNICATION DEVICE :

DECISION ON TWO PETITIONS UNDER 37 C.F.R. §1.181 AND 1.137(B)

This is a decision on the two petitions, concurrently filed November 18, 2006, pursuant to 37 C.F.R. §§1.137(b)[1], to revive the above-identified application, and 1.181 to withdraw the holding of abandonment.

The above-identified application became abandoned for failure to reply within the meaning of 37 C.F.R §1.113 in a timely manner to the final Office action mailed December 13, 2005, which set a shortened statutory period for reply of three months. An after-

1 A grantable petition pursuant to 37 C.F.R §1.137(b) must be accompanied by:
(1) The reply required to the outstanding Office action or notice, unless previously filed;
(2) The petition fee as set forth in § 1.17(m);
(3) A statement that the entire delay in filing the required reply from the due date for the reply until the filing of a grantable petition pursuant to this paragraph was unintentional. The Commissioner may require additional information where there is a question whether the delay was unintentional, and;
(4) Any terminal disclaimer (and fee as set forth in § 1.20(d)) required pursuant to paragraph (d) of this section.

final amendment was received on February 21, 2006, and an advisory action was mailed on March 17, 2006. No extensions of time under the provisions of 37 C.F.R §1.136(a) were obtained, and no further response was received. Accordingly, the above-identified application became abandoned on March 14, 2006. A notice of abandonment was mailed on July 18, 2006.

The petition pursuant to 37 C.F.R. §1.181:

Petitioner's representative has requested that the Office "withdraw the Notice of Abandonment[2]."

37 C.F.R. § 1.181 (f) sets forth, *in pertinent part*:

> Any petition under this part not filed within two months of the mailing date of the action or notice from which relief is requested may be dismissed as untimely, except as otherwise provided. This two-month period is not extendable.

37 C.F.R. §1.181(f) indicates that any petition submitted under this portion of the C.F.R. that is not filed within two months of the mailing date of the action or notice from which relief is requested may be dismissed as untimely. The present petition was submitted almost four months after the mailing of the notice of abandonment.

As such, the petition under 37 C.F.R. §1.181 is **DISMISSED** as untimely.

It is noted in passing that even if this petition were to be accepted as timely filed, it could not be granted. Petitioner's representative has given no reason why the holding of abandonment was improper, and does not appear to have even alleged the same.

The petition pursuant to 37 C.F.R. §1.137(b):

37 C.F.R. §1.137(b)(3) requires a statement that the entire delay in filing the required reply from the due date for the reply until the filing of a grantable petition pursuant to 37 C.F.R. §1.137(b) was unintentional. Since the statement contained in the instant petition varies from the language required by 37 C.F.R. §1.137(b)(3), the statement contained in the instant petition is being construed as the statement required by 37 C.F.R. §1.137(b)(3) and Petitioner's representative must notify the Office if this is not a correct interpretation of the statement contained in the instant petition.

---

2 Petition, page 4.

With the present petition, Petitioner's representative has submitted the petition fee and a statement which is being construed as the proper statement of unintentional delay. Petitioner has further included a Request for Continued Examination (RCE) under 37 C.F.R. §1.114, and the associated fee.

No terminal disclaimer is required. The RCE has been accepted as the required reply under 37 C.F.R. §1.137(b)(1). The amendment of February 21, 2006 shall serve as the required submission.

As such, the petition under 37 C.F.R. §1.137(b) is **GRANTED**.

The Technology Center will be notified of this decision. The Technology Center's support staff will notify the Examiner of this decision, so that the RCE can be processed.

Telephone inquiries regarding *this decision* should be directed to the undersigned at (571) 272-3225[3]. All other inquiries concerning examination procedures or status of the application should be directed to the Technology Center.

Paul Shanoski
Senior Attorney
Office of Petitions
United States Patent and Trademark Office

3 Petitioner will note that all practice before the Office should be in writing, and the action of the Office will be based exclusively on the written record in the Office. See 37 C.F.R. §1.2. As such, Petitioner is reminded that no telephone discussion may be controlling or considered authority for any further action(s) of Petitioner.

2001-0711

UNITED STATES PATENT AND TRADEMARK OFFICE

Commissioner for Patents
United States Patent and Trademark Office
Alexandria, VA 22313
www.uspto.gov

RECEIVED
FEB 11 2004
WENDEROTH, LIND & PONACK

Paper No. 0104

Michael Huppert
WENDEROTH, LIND & PONACK, L.L.P.
2033 K Street N. W.
Suite 800
Washington D.C. 20006

FEB 10 2004

In re Application of: Takeshi Kuribayashi et al.
Application No.: 09/881,672
Filed: June 18, 2001
For: ELECTRONIC COMPONENT AND MOUNTING METHOD AND APPARATUS THEREOF

DECISION ON PETITION

This is a decision on the petition filed on July 14, 2003 requesting reconsideration and withdrawal of the restriction requirement under 37 C.F.R. § 1.144.

The petition is **DENIED**.

Petitioner asserts that the Requirement for Restriction of February 20, 2002, is improper because there is no burden on the examiner to examine the restricted claims as they are identical to the claims in the parent application 09/319779. The petitioner timely traversed the restriction requirement in the response of March 15, 2002. The requirement was made final in the office action of June 6, 2002. Then, petitioner again traversed the restriction requirement in the Request for Reconsideration filed June 27, 2002.

A review of the action mailed December 18, 2002, indicates that the following restriction requirement was made:

> Restriction to one of the following inventions is required under 35 U.S.C. 121:
> I. Claims 26-36, drawn to a product, classified in class 174, subclass 52.4.
> II. Claims 37-44, drawn to a method, classified in class 29, subclass 825
> III. Claims 45-47, drawn to an apparatus, classified in class 29, subclass 729

The inventions are distinct, each from the other because of the following reasons:

Inventions I and II are related as process of making and product made. The inventions are distinct if either or both of the following can be shown: (1) that the process as claimed can be used to make other and materially different product or (2) that the product as claimed can be made by another and materially different process (MPEP § 806.05(f)). In the instant case, the product as claimed can be made by another and materially different process such as a mounting the product on the board, then checking the reference marks to be sure the product was correctly mounted and reworking the product if it was not correctly mounted.

Inventions II and II are related as process and apparatus for its practice. The inventions are distinct if it can be shown that either: (1) the process as claimed can be practiced by another materially different apparatus or by hand, or (2) the apparatus as claimed can be used to practice another and materially different process. (MPEP 806.05(e)). In this case the method can be exercised by hand and the marks read by a human eye.

Inventions III and I are related as apparatus and product made. The inventions in this relationship are distinct if either or both of the following can be shown: (1) that the apparatus as claimed is not an obvious apparatus for making the product and the apparatus can be used for making a different product or (2) the product as claimed can me bade by another and materially different apparatus (MPEP 806.05(g)). In this case the product can be made by hand.

Petitioner submits that the Requirement for Restriction of February 20, 2002, is improper because, "there is no serious burden because the search and examination of claims 26-47 was previously conducted in the parent application (i.e. Serial No. 09/319,779). In particular, claims 26-47 correspond to claims 46-51, 53, and 55-72, respectively, and the merits of these claims were examined in the parent application." The parent application 09/319779 was filed as a national stage of a PCT application under 371. Therefore, restriction practice in that case is governed by, the unity of invention standard, a standard different from the U.S. restriction practice under 35 USC 121 which applies to the current application.

In the Office action of June 06, 2002, the examiner deemed this argument unpersuasive because, "the claims in the present application are not identical in scope to the claims in the parent application." In the response filed November 06, 2002, petitioner traversed the examiner's statement, arguing that, "the claims are identical to claims that were considered in the parent application."

A careful review of the record indicates that while the claims of the present application and the parent application are similar, they are not identical. Specifically, claim 26 has the limitation "located on a surface of the electronic component" which is not present in claim 46. Other differences also exist.

In parent application 09/319779, an original restriction requirement was made similar to the restriction requirement in the present application. The restriction was subsequently withdrawn because case 09/319779 was filed as a national stage of a PCT.

The issue at hand is that the propriety of the restriction requirement does not depend on whether claims 26-47 are identical to claims 46-51, 53 and 55-72, and whether or not identical claims were searched and examined in the parent application. The propriety depends on whether the distinctness criteria were properly met and whether burden due to divergent search and different classification or different status in the art (MPEP 808.02) is present. Both of these criteria are properly met in the restriction requirement for the present application.

Petitioner has not argued that the examiner did not show by appropriate explanation separate classification, separate status in the art, or a different field of search. Therefore, the petitioner is not properly rebutting the burden to the examiner. The petitioner there is no burden to the examiner because the claims are identical to those in the parent application. This assertion does not rebut the showing of separate classification, separate status in the art, and a different field of search.

> MPEP 811.04 states:
> Even though inventions are grouped together in a requirement in a parent application, restriction or election among the inventions may be required in the divisional applications, if proper.

A review of the prosecution history of the instant application reveals that a non-final office action was mailed on December 3, 2003, to which no response has been received. The case is being forwarded to central files to await applicant's response to the office action of December 3, 2003.

Sharon Gibson, Director
Technology Center 2800
Semiconductors, Electrical and Optical Systems and Components

UNITED STATES PATENT AND TRADEMARK OFFICE

Commissioner for Patents
United States Patent and Trademark Office
P.O. Box 1450
Alexandria, VA 22313-1450
www.uspto.gov

MAIL

MAR - 3 2005

DIRECTOR OFFICE
TECHNOLOGY CENTER 2100

C. Irvin McClelland
OBLON, SPIVAK, McCLELLAND, MAIER & NEUSTADT, P.C.
1940 Duke Street
Alexandria, VA 22314

In re Application of:
Mikael Floven, et. al.
Application No. 09/881,709
Filed: June 18, 2002
For: SYSTEM AND METHOD FOR INDIVIDUALLY APAPTED TRAINING

DECISION ON REQUEST TO WITHDRAW AS ATTORNEY OR AGENT

This is a decision on the Request To Withdraw from Representation filed October 4, 2004 and the supplemental request filed January 4, 2005.

A grantable request to withdraw as attorney of record should indicate thereon the present mailing addresses of the attorney(s) who is/are withdrawing from the record and of the applicant. The request for withdrawal must be signed by every attorney seeking to withdraw or contain a clear indication that one attorney is signing on behalf of another/others. A request to withdraw will not be approved unless at least 30 (thirty) days would remain between the date of approval and the later of the expiration date of a time to file a response or the expiration date of the maximum time period which can be extended under 37 C.F.R. § 1. 136(a). The effective date of withdrawal being the date of decision and not the date of request. See M.P.E.P. § 402.06. 37 C.F.R. § 1.36 further requires that the applicant or patent owner be notified of the withdrawal of the attorney or agent.

The request is **GRANTED**.

All future communications from the Office will be directed to the below-listed address until otherwise notified by applicant. This correspondence address is provided by the withdrawn attorney(s). Applicant is reminded of the obligation to promptly notify the Patent and Trademark Office (Office) of any change in correspondence address to ensure receipt of all communications from the Office.

for

Vincent N. Trans
Special Program Examiner
Technology Center 2100

2/14/05

cc: USE YOUR CELL AB
Lutzengatan 9
115 20 Stockholm
Sweden

UNITED STATES PATENT AND TRADEMARK OFFICE

COMMISSIONER FOR PATENTS
UNITED STATES PATENT AND TRADEMARK OFFICE
P.O. BOX 1450
ALEXANDRIA, VA 22313-1450
www.uspto.gov

STERNE, KESSLER, GOLDSTEIN & FOX P.L.L.C.
1100 NEW YORK AVENUE, N.W.
WASHINGTON, DC 20005

COPY MAILED

OCT 09 2007

OFFICE OF PETITIONS

In re Application of :
A. Scott Hollums, et al. :
Application No.: 09/881,734 : ON PETITION
Filed: June 18, 2001 :
Attorney Docket No.: 1875.0700002 :

This is a decision on the petition, filed October 5, 2007, under 37 CFR 1.313(c)(2) to withdraw the above-identified application from issue after payment of the issue fee.

The petition is **GRANTED**.

The above-identified application is withdrawn from issue for consideration of a submission under 37 CFR 1.114 (request for continued examination). See 37 CFR 1.313(c)(2).

Petitioner is advised that the issue fee paid on September 18, 2007, in the above-identified application, cannot be refunded. If, however, the above-identified application is again allowed, petitioner may request that it be applied towards the issue fee required by the new Notice of Allowance. [1]

Telephone inquiries relating to this decision should be directed to the undersigned at (571) 272-3204.

The application is being referred to Technology Center AU 2616 for further processing of the request for continued examination under 37 CFR 1.114 and for consideration of the concurrently filed Information Disclosure Statement (IDS).

Sherry D. Brinkley
Petitions Examiner
Office of Petitions

[1] *The request to apply the issue fee to the new Notice may be satisfied by completing and returning the new Part B – Fee(s) Transmittal Form (along with any balance due at the time of submission). Petitioner is advised that the Issue Fee Transmittal Form must be completed and timely submitted to avoid abandonment of the application.*

UNITED STATES PATENT AND TRADEMARK OFFICE

COMMISSIONER FOR PATENTS
UNITED STATES PATENT AND TRADEMARK OFFICE
WASHINGTON, D.C. 20231
www.uspto.gov

Paper No. 8

CLARK & ELBING, LLP
176 FEDERAL STREET
BOSTON, MA 02110

COPY MAILED

MAY 07 2002

OFFICE OF PETITIONS

In re Application of
Harold Kleanthous, et al
Application No. 09/881,752
Filed: June 15, 2001
Attorney Docket No. 06132/041002

DECISION GRANTING PETITION

This is a decision on the petition under 37 CFR 1.10(c), filed March 28, 2002, requesting that the above-identified application be accorded a filing date of June 15, 2001, instead of the presently accorded date of June 18, 2001.

Petitioner alleges that the application was deposited in "Express Mail" service with the U. S. Postal Service, on June 15, 2001. In support, petitioners provide a copy of the Express Mail label, receipt no. EL509219208US. The same Express Mail receipt number was referred to in Certificate of Mailing by Express Mail dated June 15, 2001 found on the the original transmittal letter submitted on filing. It is noted that while the "date in" on the copy of the Express Mail label is indicated as "6/18/01", it includes a "FORT POINT STA BOSTON MA 02205 USPS" receipt stamp dated June 15, 2001.

The Office considers the date the paper or fee is shown to have been deposited as "Express Mail" to be the "Date In" on the Express Mail label, MPEP 513. That is the date that verifies that the package was actually mailed. The evidence is convincing that the application was deposited as "Express Mail" with the US Postal Service on June 15, 2001.

The petition is granted.

The application is being returned to Initial Patent Examination Division for correction of the filing date to **June 15, 2001**.

Telephone inquires related to this decision should be directed to the undersigned at (703) 305-9220. Telephone inquiries related to OIPE processing should be directed to their hotline at (703) 308-1202.

Sherry D. Brinkley
Petitions Examiner
Office of Petitions
Office of the Deputy Assistant Commissioner
for Patent Policy and Projects

UNITED STATES PATENT AND TRADEMARK OFFICE

Commissioner for Patents
United States Patent and Trademark Office
P.O. Box 1450
Alexandria, VA 22313-1450
www.uspto.gov

COPY MAILED
DEC 19 2006
OFFICE OF PETITIONS

MANELLI DENISON & SELTER
2000 M STREET NW SUITE 700
WASHINGTON DC 20036-3307

In re Patent No. 6,999,462 :
Issue Date: February 14, 2006 :
Application No. 09/881,771 : DECISION ON PETITION
Filed: June 18, 2001 :
Attorney Docket No. 95-505 :

This is a decision on the petition under 37 CFR 1.182, filed August 23, 2006, requesting issuance of a duplicate Letters Patent for the above-identified patent.

The petition is **GRANTED**.

The Office of Patent Publication is directed to issue a duplicate Letters Patent.

The $400 fee for the petition under 37 CFR 1.182 will be refunded.

Telephone inquiries concerning this decision may be directed to the undersigned at (571) 272-3215.

Inquiries regarding the issuance of a duplicate Letters Patent may be directed to Krystal Paige in the Office of Patent Publication at (703) 308-9250, Ext. 139.

A copy of this decision is being faxed to the Office of Patent Publication for issuance of a duplicate Letters Patent.

Charlema R. Grant
Petition Attorney
Office of Petitions

cc: Krystal Paige, South Tower, 8th Floor, Room C32 (Fax No. (571) 270-9937)

UNITED STATES PATENT AND TRADEMARK OFFICE

Commissioner for Patents
United States Patent and Trademark Office
P.O. Box 1450
Alexandria, VA 22313-1450
www.uspto.gov

QUALCOMM INCORPORATED
PATENTS DEPARTMENT
5775 MOREHOUSE DRIVE
SAN DIEGO, CA 92121-1714

COPY MAILED

MAR 1 4 2005

OFFICE OF PETITIONS

In re Application of	:	
Chidambaram Krishnan et al	:	
Application No. 09/881,868	:	ON PETITION
Filed: June 15, 2001	:	
Attorney Docket No. 010362	:	

This is a decision on the petition under 37 CFR 1.137(b), filed March 2, 2005, to revive the above-identified application.

The petition is **GRANTED.**

The above-identified application became abandoned for failure to reply in a timely manner to the non-final Office action mailed July 1, 2004, which set a shortened statutory period for reply of three (3) months. No extensions of time under the provisions of 37 CFR 1.136(a) were obtained. Accordingly, the above-identified application became abandoned on October 2, 2004.

37 CFR 1.137(b)(3) requires a statement that the entire delay in filing the required reply from the due date for the reply until the filing of a grantable petition pursuant to 37 CFR 1.137(b) was unintentional. If the statement contained in the instant petition varies from the language required by 37 CFR 1.137(b)(3), the statement contained in the instant petition is being construed as the statement required by 37 CFR 1.137(b)(3) and petitioner must notify the Office if this is **not** a correct interpretation of the statement contained in the instant petition.

Pursuant to petitioner's authorization, Deposit Account No. 17-0026 was charged $1,500.00 for the petition to revive an unintentionally abandoned application.

Telephone inquiries concerning this decision should be directed to Wan Laymon at (571) 272-3220.

This matter is being referred to Technology Center 2131.

Wan Laymon

Wan Laymon
Petitions Examiner
Office of Petitions
Office of the Deputy Commissioner
for Patent Examination Policy

UNITED STATES PATENT AND TRADEMARK OFFICE

Commissioner for Patents
United States Patent and Trademark Office
P.O. Box 1450
Alexandria, VA 22313-1450
www.uspto.gov

MAILED
FROM DIRECTORS OFFICE

MAR 16 2005

TECHNOLOGY CENTER 3600

ANDRE L. MARAIS
BLAKELY SOKOLOFF TAYLOR & ZAFMAN
12400 WILSHIRE BOULEVARD
SEVENTH FLOOR
LOS ANGELES, CA 90025-1030

In re application of
Jeff Taylor et al.
Application No. 09/881,911 :
Filed: June 15, 2001 :
For: METHOD AND SYSTEM TO IMPLEMENT SELLER AUTHORIZED BUYING PRIVILEGES WITHIN A NETWORK-BASED SHOPPING FACILITY :

DECISION ON REQUEST FOR WITHDRAWAL OF ATTORNEY

This is a decision on the request filed on November 22, 2004, under 37 CFR 1.36 and MPEP 402.06, requesting permission to withdraw as the attorney of record in the above-identified application.

The request is **NOT APPROVED**.

Under 37 CFR 1.36 an attorney may withdraw only upon application to and approval by the Commissioner. It should be noted that a withdrawal is effective when approved, not when filed. For approval of such a request the following conditions must be met:

A) Each attorney of record must sign the notice of withdrawal, or the notice must contain a clear indication of one attorney signing on behalf of another, because the Office does not recognize law firms;
B) There must be at least 30 days between approval of the withdrawal and the later of the expiration date of a time period for reply or the expiration date of the period which can be obtained by a petition and fee for extension of time under 37 CFR 1.136(a);
C) A proper reason for the withdrawal as enumerated in 37 CFR 10.40(b) or subsection (1)-(6) of 37 CFR 10.40(c) must be provided;
D) The applicant or patent owner must have been notified of the withdrawal as provided for in 37 CFR 1.36.

09/881,911

The request to withdraw as attorney is not accepted in the above-identified application because the request lacks condition B) above.

As to condition B), The statement included in the request, "Discontinuation of attorney client relationship," does not satisfy one of the valid reasons for withdrawal under 37 CFR 10.40 (b)(1)-(4) or (c)(1)-(6). The attorney may not discontinue the attorney client relationship on his own accord.

Kenneth J. Dorner
Special Programs Examiner
Patent Technology Center 3600
(703) 308-0866

KJD/slb: 01/28/05

UNITED STATES PATENT AND TRADEMARK OFFICE

COMMISSIONER FOR PATENTS
UNITED STATES PATENT AND TRADEMARK OFFICE
P.O. BOX 1450
ALEXANDRIA, VA 22313-1450
www.uspto.gov

Paper No.

Harness, Dickey, & Pierce, P.L.C.
7700 Bonhomme
Suite 400
St. Louis, MO 63105

COPY MAILED

MAY 1 2 2004

OFFICE OF PETITIONS

In re Application of	:	
Srinivasanraj Nagarajan, et al.	:	
Application No. 09/881,913	:	ON PETITION
Filed: June 15, 2001	:	
Attorney Docket No. 3321/US	:	

This is a decision on the petition under 37 CFR 1.137(b), filed March 22, 2004, to revive the above-identified application.

The petition is **GRANTED**.

Pursuant to 37 CFR 1.136, an extension of time must be filed prior to the expiration of the maximum period obtainable for reply to avoid abandonment. Since the $950 extension of time fee submitted with the present petition was subsequent to the six-month statutory period for reply, this fee is unnecessary and will be credited to petitioner's deposit account.

Telephone inquiries concerning this decision should be directed to the undersigned at (703) 306-3475.

The application file is being forwarded to Technology Center 1600.

Marianne E. Morgan
Petitions Examiner
Office of Petitions
Office of the Deputy Commissioner
for Patent Examination Policy

UNITED STATES PATENT AND TRADEMARK OFFICE

COMMISSIONER FOR PATENTS
UNITED STATES PATENT AND TRADEMARK OFFICE
P.O. BOX 1450
ALEXANDRIA, VA 22313-1450
www.uspto.gov

FRISHAUF, HOLTZ, GOODMAN & CHICK, PC
220 5TH AVE FL 16
NEW YORK NY 10001-7708

COPY MAILED

OCT 07 2005

OFFICE OF PETITIONS

In re application of :
Kei Yamada, et al. :
Application No. 09/881,925 :
Filed: June 14, 2001 :
Attorney Docket No. 01358/LH :

DECISION GRANTING PETITION

This is a decision on the petition filed on May 19, 2005, requesting that the filing date of an Amendment and Information Disclosure Statement (IDS) be acknowledged as May 9, 2005, rather than the presently accorded filing date of May 10, 2005.

Applicants request the earlier filing date on the basis that the application was purportedly deposited in Express Mail service on May 9, 2005. In support, the petition is accompanied by a copy of a USPS record styled "Pickup Service Statement - Express Mail, Priority Mail, or Parcel Post" showing that a package bearing Express Mail label No. EV 478458934 US (the same Express Mail number found on the papers located in the official Image File Wrapper) was picked up by the USPS from counsel's office on May 9, 2005. The U.S. Postal Service Track & Confirm restoration record corroborates a "date-in" of May 9, 2005, as it shows that the "Express Mail" package in question was accepted at 9:16pm on May 9, 2005 at the USPS located in New York, NY 10150.

In view of the above, it is concluded that the correct date of deposit of the amendment and IDS in Express Mail service is May 9, 2005. Accordingly, the amendment and IDS will be annotated to show that they were filed pursuant to 37 CFR 1.10 on May 9, 2005, not May 10, 2005, in the Image File Wrapper.

The petition is granted. No petition fee was charged to counsel's deposit account, nor is one due.

The application is being referred to Technology Center AU 2624 for consideration of the amendment and IDS filed May 9, 2005.

Sherry D. Brinkley
Petitions Examiner
Office of Petitions

UNITED STATES PATENT AND TRADEMARK OFFICE

Commissioner for Patents
United States Patent and Trademark Office
P.O. Box 1450
Alexandria, VA 22313-1450
www.uspto.gov

Date: August 17, 2006

FILE COPY

Patent No.: 7,076,630 B2
Issued : July 11, 2006
Inventor : Musoll, et al.
Title : **METHOD AND APPARATUS FOR ALLOCATING AND DE-ALLOCATING CONSECUTIVE BLOCKS OF MEMORY IN BACK-GROUND MEMO MANAGEMENT**
Docket No: MIPS.0173-00-US

Re: Request for Certificate of Correction

Consideration has been given your request for the issuance of a certificate of correction, for the above-identified patent under the provision of Rule 1.322 or 1.323.

Respecting the alleged error, in the Assignee, or Firm is printed solely in accordance with the PTOL-85b (Issue Fee Transmittal), submitted at the time of payment of the base issue fee. Therefore, no correction(s) is in order here under United States Codes (U.S.C.) 254 or 255 and the Code of Federal Regulation (C.F.R.) 1.322 or 1.323.

In view of the foregoing your request is hereby denied.

Any petition under 37 CFR 1.183 should be directed to the attention of the Assistant Commissioner for Patents, using the following mailing address or FAX number.

By Mail: Mail Stop PETITIONS
Commissioner for Patents
Post Office Box 1450
Washington, D.C. 22313-1450

By Fax: (571) 273-8300
Attn.: Office of Petitions

If the Petition under 37 CFR 1.182 (required fee currently $130), is filed and granted, the Patentee would be entitled to certificate of correction under 37 CFR 1.323 (required fee currently 100).

Further correspondence concerning this matter should be filed and directed to Decisions and Certificates of Correction Branch. Any response must be filed within a four week period.

Elisha Evans
Newman Cecelia
Decisions & Certificates
of Correction Branch
(703) 308-9390

HUFFMAN LAW GROUP, P.C.
1832 N. CASCADE AVE.
COLORADO SPRINGS CO 80907-7449

CBN/eme

UNITED STATES PATENT AND TRADEMARK OFFICE

Commissioner for Patents
United States Patent and Trademark Office
P.O. Box 1450
Alexandria, VA 22313-1450
www.uspto.gov

HUFFMAN LAW GROUP PC
1900 MESA AVE
COLORADO SPRINGS CO 80906

COPY MAILED
FEB 09 2007
OFFICE OF PETITIONS

In re Patent No. 7,076,630	:	
Issue Date: July 11, 2006	:	
Application No. 09/881,934	:	DECISION ON PETITION
Filed: June 14, 2001	:	
Attorney Docket No. MIPS.0173-00-US	:	

This is a decision on the petition under 37 CFR 1.183, filed August 24, 2006.

The petition is **GRANTED**.

An application may issue in the name of an assignee rather than the applicant if requested prior to issuance of a patent.[1] However, in the event the request is not made prior to issuance, a Certificate of Correction under 37 CFR 1.323 may be requested. A request for a Certificate of Correction under 37 CFR 1.323 to correct the assignee's name will not be granted unless a petition under 37 CFR 1.183 is granted. Such petition under 37 CFR 1.183 should include:

(A) the processing fee required by 37 CFR 1.17(i);

(B) a request for issuance of the application in the name of the assignee, or a request that a patent be corrected to state the name of the assignee;

---

[1] See 37 CFR 3.81.

(C) a statement that the assignment was submitted for recordation as set forth in 37 CFR 3.11 before issuance of the patent; and

(D) a request for a certificate of correction under 37 CFR 1.323 accompanied by the fee set forth in 37 CFR 1.20(a).[2]

The processing fee in 37 CFR 1.17(i) is only $130. As petitioner submitted $400, $270 will be refunded to petitioner under separate cover.

Telephone inquiries related to this decision should be directed to the undersigned at (571)272-3207.

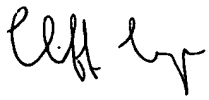

Cliff Congo
Petitions Attorney
Office of Petitions

---

[2] MPEP 307.

PET DEC

UNITED STATES PATENT AND TRADEMARK OFFICE

Commissioner for Patents
United States Patent and Trademark Office
P.O. Box 1450
Alexandria, VA 22313-1450
www.uspto.gov

JUN - 1 2004

In re Application of Bhajomohan (Ricky) Singh et al. Serial No. 09/881,935 Filed: June 15, 2001 For: METHOD AND APPARATUS FOR CUSTOMIZING A MULTIPLE COMPONENT PET FOOD	: : : : : : : :	NOTICE OF WITHDRAWAL FROM ISSUE UNDER 37 CFR 1.313(b)

The above-identified application is withdrawn from issue after payment of the issue fee due to reopening of prosecution. See 37 CFR 1.313 (b).

The above-identified application is hereby withdrawn from issue.

The issue fee is refundable upon written request. If, however, the application is again found allowable, the issue fee can be applied toward payment of the issue fee in the amount identified on the new Notice of Allowance and Issue Fee Due upon written request. This request and any balance due must be received on or before the due date noted in the new Notice of Allowance in order to prevent abandonment of the application.

Telephone inquiries should be directed to at Milton Cano (571) 272-1398.

The above-identified application is being forwarded to the examiner for prompt appropriate action, including notifying applicant of the new status of this application.

JMStone

Jacqueline Stone, Director
Technology Center 1700
Chemical and Materials Engineering

John S. Beulick
Armstrong Teasdale LLP
One Metropolitan Sq., Suite 2600
St. Louis, MO 63102

cc: Allowed Files—Pk3-915

UNITED STATES PATENT AND TRADEMARK OFFICE

Commissioner for Patents
United States Patent and Trademark Office
P.O. Box 1450
Alexandria, VA 22313-1450
www.uspto.gov

JUN - 1 2004

In re Application of Bhajomohan (Ricky) Singh et al. Serial No. 09/881,935 Filed: June 15, 2001 For: METHOD AND APPARATUS FOR CUSTOMIZING A MULTIPLE COMPONENT PET FOOD	: : : : : : : :	NOTICE OF WITHDRAWAL FROM ISSUE UNDER 37 CFR 1.313(b)

The above-identified application is withdrawn from issue after payment of the issue fee due to reopening of prosecution. See 37 CFR 1.313 (b).

The above-identified application is hereby withdrawn from issue.

The issue fee is refundable upon written request. If, however, the application is again found allowable, the issue fee can be applied toward payment of the issue fee in the amount identified on the new Notice of Allowance and Issue Fee Due upon written request. This request and any balance due must be received on or before the due date noted in the new Notice of Allowance in order to prevent abandonment of the application.

Telephone inquiries should be directed to at Milton Cano (571) 272-1398.

The above-identified application is being forwarded to the examiner for prompt appropriate action, including notifying applicant of the new status of this application.

JMStone

Jacqueline Stone, Director
Technology Center 1700
Chemical and Materials Engineering

John S. Beulick
Armstrong Teasdale LLP
One Metropolitan Sq., Suite 2600
St. Louis, MO 63102

cc: Allowed Files—Pk3-915

RECEIVED
JUN 18 2004
OIPE/JC115

UNITED STATES PATENT AND TRADEMARK OFFICE

UNITED STATES DEPARTMENT OF COMMERCE
United States Patent and Trademark Office
Address: COMMISSIONER FOR PATENTS
P.O. Box 1450
Alexandria, Virginia 22313-1450
www.uspto.gov

BROWN RUDNICK LLP
ONE FINANCIAL CENTER
BOSTON, MA 02111

Mail Date: 04/21/2010

Applicant	: L. Patrick Gardner	: DECISION ON REQUEST FOR
Patent Number	: 7640200	: RECALCULATION of PATENT
Issue Date	: 12/29/2009	: TERM ADJUSTMENT IN VIEW
Appliction No	: 09/881,959	: OF WYETH AND NOTICE OF INTENT TO
Filed	: 06/15/2001	: ISSUE CERTIFICATE OF CORRECTION
		:

The Request for Recalculation is **GRANTED** to the extent indicated.

The patent term adjustment has been determined to be **1623** days. The USPTO will *sua sponte* issue a certificate of correction reflecting the amount of PTA days determined by the recalculation.

Prior to the issuance of the certificate of correction, the USPTO will afford patentee an opportunity to be heard and request reconsideration. Accordingly, patentee has **one month or thirty (30) days**, whichever is longer, to file a request for reconsideration of this patent term adjustment calculation. See 35 U.S.C. 154(b)(3)(B)(ii) and 37 CFR 1.322(a)(4). No extensions of time will be granted under 37 CFR 1.136.

Patentee should use document code PET.OP if electronically filing a request for reconsideration of this patent term adjustment calculation. The patentee must also include the information required by 37 CFR 1.705(b)(2) and the fee required by 37 CFR 1.18(e). If patentee does not file a timely request for reconsideration of this patent term adjustment calculation including the information required by 37 CFR 1.705(b)(2) and the fee required by 37 CFR 1.18(e), the USPTO will issue a certificate of correction reflecting the PTA determination noted above.

Patentee should be aware that in order to preserve the right to review in the United States District Court for the District of Columbia of the USPTO patent term adjustment determination, patentee must ensure that he or she also take the steps required under 35 U.S.C. 154(b)(4)(A) in a timely manner. Nothing in the request for recalculation should be construed as providing an alternative time frame for commencing a civil action under 35 U.S.C. 154(b)(4)(A).

Any questions concerning this decision should be directed to the Office of Patent Legal Administration at 571-272-7702.

UNITED STATES PATENT AND TRADEMARK OFFICE

Commissioner for Patents
United States Patent and Trademark Office
P.O. Box 1450
Alexandria, VA 22313-1450
www.uspto.gov

WILLIAM LAWRENCE MUCKELROY PC
1901 NORTH OLDEN AVENUE, EXT SUITE 3A
EWING PROFESSIONAL PARK
TRENTON, NJ 08618

COPY MAILED

OCT 11 2007

OFFICE OF PETITIONS

In re Application of Kayser :
Application No. 09/882,007 : Decision on Petition
Filing Date: June 15, 2001 :
Attorney Docket No. 2110/12/99 :

This is a decision on the petition under 37 CFR 1.181, filed June 8, 2007, and supplemented July 2, 2007, to withdraw the holding of abandonment.

The petition is **granted.**

A non-final Office action was mailed November 17, 2006. The Office action set a three (3) month shortened statutory period for reply.

A Notice of Abandonment was mailed June 1, 2007.

Petitioner contends a reply was timely filed in response to the November 17, 2006 Office action.

A review of the file indicates a reply to the non-final Office action has been matched with the file. The file indicates the Office physically received the reply on May 21, 2007.

The reply includes a proper Certificate of Mailing dated May 16, 2007, and payment for a three-month extension of time. Therefore, the reply was timely filed.

The Notice of Abandonment is hereby vacated and the holding of abandonment withdrawn.

The three-month extension of time payment was paid on May 21, 2007. The payment was resubmitted on June 8, 2007. The Office will schedule a refund of the duplicate payment of $510.

Technology Center Art Unit 3692 will be informed of the instant decision and the examiner will review the papers filed on May 21, 2007, in due course.

Telephone inquiries regarding this communication should be directed to Petitions Attorney Steven Brantley at (571) 272-3203.

Charles Steven Brantley
Senior Petitions Attorney
Office of Petitions

UNITED STATES PATENT AND TRADEMARK OFFICE

COMMISSIONER FOR PATENTS
UNITED STATES PATENT AND TRADEMARK OFFICE
P.O. BOX 1450
ALEXANDRIA, VA 22313-1450
www.uspto.gov

OIPE JC88
MAR 29 2004
PATENT & TRADEMARK OFFICE

Paper No. 11

Kenneth R. Corsello
KENYON & KENYON
1500 K Street, NW, Suite 700
Washington, DC 20006

RECEIVED
MAR 15 2004
PATENT DEPARTMENT
TESTA, HURWITZ & THIBEAULT, LLP

COPY MAILED
MAR 10 2004
OFFICE OF PETITIONS

In re Application of Baldine-Brunel PAUL Application No. 08/882,036 Filed: June 18, 2001 Attorney Docket No.2685/5737	: : : :	DECISION ON PETITION 37 CFR 1.137(b)

This is a decision on the petition under 37 CFR 1.137(f) filed February 4, 2004, which is being treated as a petition under 37 CFR1.137(b) to revive the above-identified application for failure to timely notify the U.S. Patent and Trademark Office (USPTO) of the filing of an application in a foreign country, or under a multinational treaty that requires publication of applications eighteen months after filing. *See* 37 CFR 1.137 (f).

The petition to revive the above-identified application is **GRANTED**.

Petitioner states that the instant nonprovisional application is the subject of an application filed in an eighteen month publication country. The filing dates of the subsequently filed foreign or international applications are: June 14. 2002 (Canada, App. No. 2390715); June 10, 2002 (EPO, App. No. 02012434.3); June 18, 2002 (Japan, App. No. 2002-176549). However, the USPTO was unintentionally not notified of these filings within 45 days subsequent to the filing of the subject application in an eighteen month publication country.

In view of the above, this application became abandoned pursuant to 35 U. S. C. Sect. 122 (b) (2) (B) (iii) and 37 CFR 1.213© for failure to timely notify the Office of the filing of an application in a foreign country or under a multinational agreement that requires publication of applications 18 months after filing.

A petition to revive an application abandoned pursuant to 35 U. S. C. 122 (b) (2) (B) (iii) for failure to notify the USPTO of a foreign filing must be accompanied by:

(1) the required reply which is met by the notification of such filing in a foreign country or under a multinational treaty;
(2) the petition fee as set forth in 37 CFR 1.17 (m); and
(3) a statement that the entire delay in filing the required reply from the due date of the reply until the filing of a grantable petition was unintentional.

The instant petition has been found to be in compliance with 37 CFR 1.137 (b). Accordingly, the failure to timely notify the USPTO of a foreign or international filing within 45 days after the date of filing of such foreign or international application as provided by 35 U. S. C. Sect. 122 (b) (2) (B) (iii) and 37 CFR 1.213 (c) is accepted as having been unintentionally delayed.

The previous Request and Certification under 35 U. S. C. Sect. 122 (b) (2) (B) (I) has been rescinded. A Notice Regarding Rescission of Nonpublication Request which sets forth the

Copied from 08882036 on 06-04-2004

projected publication date was mailed in a separate correspondence to the Applicant

This application is being forwarded to Technology Center Art Unit 2611 for examination in due course.

Inquiries regarding this communication may be directed to Samuel A. Acquah at (703) 605-5229 or, in his absence, to the undersigned at (703) 308-3865.

BethAnne Dayoan
Petitions Examiner
Office of Petitions
Office of the Deputy Commissioner
for Patent Examination Policy

Copied from 08882036 on 06-04-2004

UNITED STATES PATENT AND TRADEMARK OFFICE

COMMISSIONER FOR PATENTS
UNITED STATES PATENT AND TRADEMARK OFFICE
P.O. BOX 1450
ALEXANDRIA, VA 22313-1450
www.uspto.gov

Paper No. 11

Kenneth R. Corsello
KENYON & KENYON
1500 K Street, NW, Suite 700
Washington, DC 20006

COPY MAILED

MAR 1 0 2004

OFFICE OF PETITIONS

In re Application of Baldine-Brunel PAUL Application No. 08/882,036 Filed: June 18, 2001 Attorney Docket No.2685/5737	: : : :	DECISION ON PETITION 37 CFR 1.137(b)

This is a decision on the petition under 37 CFR 1.137(f) filed February 4, 2004, which is being treated as a petition under 37 CFR1.137(b) to revive the above-identified application for failure to timely notify the U.S. Patent and Trademark Office (USPTO) of the filing of an application in a foreign country, or under a multinational treaty that requires publication of applications eighteen months after filing. *See* 37 CFR 1.137 (f).

The petition to revive the above-identified application is **GRANTED**.

Petitioner states that the instant nonprovisional application is the subject of an application filed in an eighteen month publication country. The filing dates of the subsequently filed foreign or international applications are: June 14. 2002 (Canada, App. No. 2390715); June 10, 2002 (EPO, App. No. 02012434.3); June 18, 2002 (Japan, App. No. 2002-176549). However, the USPTO was unintentionally not notified of these filings within 45 days subsequent to the filing of the subject application in an eighteen month publication country.

In view of the above, this application became abandoned pursuant to 35 U. S. C. Sect. 122 (b) (2) (B) (iii) and 37 CFR 1.213© for failure to timely notify the Office of the filing of an application in a foreign country or under a multinational agreement that requires publication of applications 18 months after filing.

A petition to revive an application abandoned pursuant to 35 U. S. C. 122 (b) (2) (B) (iii) for failure to notify the USPTO of a foreign filing must be accompanied by:

(1) the required reply which is met by the notification of such filing in a foreign country or under a multinational treaty;
(2) the petition fee as set forth in 37 CFR 1.17 (m); and
(3) a statement that the entire delay in filing the required reply from the due date of the reply until the filing of a grantable petition was unintentional.

The instant petition has been found to be in compliance with 37 CFR 1.137 (b). Accordingly, the failure to timely notify the USPTO of a foreign or international filing within 45 days after the date of filing of such foreign or international application as provided by 35 U. S. C. Sect. 122 (b) (2) (B) (iii) and 37 CFR 1.213 (c) is accepted as having been unintentionally delayed.

The previous Request and Certification under 35 U. S. C. Sect. 122 (b) (2) (B) (I) has been rescinded. A Notice Regarding Rescission of Nonpublication Request which sets forth the

projected publication date was mailed in a separate correspondence to the Applicant

This application is being forwarded to Technology Center Art Unit 2611 for examination in due course.

Inquiries regarding this communication may be directed to Samuel A. Acquah at (703) 605-5229 or, in his absence, to the undersigned at (703) 308-3865.

BethAnne Dayoan
Petitions Examiner
Office of Petitions
Office of the Deputy Commissioner
for Patent Examination Policy

UNITED STATES PATENT AND TRADEMARK OFFICE

Commissioner for Patents
United States Patent and Trademark Office
P.O. Box 1450
Alexandria, VA 22313-1450
www.uspto.gov

AT & T LEGAL DEPARTMENT - NDQ
ATTN: PATENT DOCKETING
ONE AT & T WAY, ROOM 2A-207
BEDMINSTER NJ 07921

COPY MAILED

APR 06 2009

OFFICE OF PETITIONS

In re Application of
Baldine-Brunel Paul et al.
Application No. 09/882,036
Filed: June 18, 2001
Attorney Docket No. 2685/5737

DECISION ON PETITION

This is a decision on the petition under the unintentional provisions of 37 CFR 1.137(b), filed February 24, 2009, to revive the above-identified application.

The petition is **GRANTED**.

The application became abandoned for failure to reply in a timely manner to the non-final Office action mailed, September 25, 2007, which set a shortened statutory period for reply of three (3) months. No extensions of time under the provisions of 37 CFR 1.136(a) were obtained. Accordingly, the application became abandoned on December 26, 2007.

The petition satisfies the requirements of 37 CFR 1.137(b) in that petitioner has supplied (1) the reply in the form of an amendment, (2) the petition fee of $1,620, and (3) a proper statement of unintentional delay.

Telephone inquiries concerning this decision should be directed to JoAnne Burke at (571) 272-4584.

This application is being referred to Technology Center AU 2424 for appropriate action by the Examiner in the normal course of business on the reply received.

Ramesh Krishnamurthy

Ramesh Krishnamurthy
Petitions Examiner
Office of Petitions

UNITED STATES PATENT AND TRADEMARK OFFICE

Commissioner for Patents
United States Patent and Trademark Office
P.O. Box 1450
Alexandria, VA 22313-1450
www.uspto.gov

MACPHERSON KWOK
CHEN & HEID LLP
2033 GATEWAY PLACE
SUITE 400
SAN JOSE CA 95110

COPY MAILED
DEC 0 8 2008
OFFICE OF PETITIONS

In re Application of	:	
Ryu, et al.	:	
Application No. 09/882,043	:	DECISION
Filed: 18 June, 2001	:	
Attorney Docket No. AB-1604 US	:	

This is a decision on the petitions filed on 27 July, 2005, and properly considered as a petition requesting withdrawal of the holding of abandonment under 37 C.F.R. §1.181.

The petition under 37 C.F.R. §1.181 is **DISMISSED**.

Any request for reconsideration of this decision should be filed **within two (2) months** from the mail date of this decision. *Note* 37 C.F.R. §1.181(f). The request for reconsideration should include a cover letter and be entitled as a "Renewed Petition under 37 C.F.R. §1.181 to Withdraw the Holding of Abandonment."

This is **not** a final agency action within the meaning of 5 U.S.C. §704.

As to the Request to Withdraw
the Holding of Abandonment

Petitioner is directed to the Commentary at MPEP §711.03(c)(I) for guidance as to the proper showing and timeliness and showing requirements for relief under 37 C.F.R. §1.181.

Petitioner appears not to comply with the guidance in the Commentary at MPEP §711.03(c)(I)—as discussed below, Petitioner has failed to satisfy the showing requirements set forth there. Petitioner may find it beneficial to review that material and move step-wise through that

guidance in the effort to satisfy the showing requirements (statements and supporting documentation).

BACKGROUND

The record reflects as follows:

Petitioner failed to reply timely and properly to a final Office action mailed on 18 May, 2004, with reply due absent extension of time on or before 18 August, 2004.

On 13 August, 2004, Petitioner (former Counsel) filed *inter alia*, an after-final amendment, which Petitioner as one registered to practice before the Office is aware is not of right and was not a proper reply,[1] and the Examiner mailed an Advisory Action on 16 September, 2004.

On 17 November, 2004, Petitioner filed a request and fee for extension of time and a Notice of Appeal and fee.

On 14 January, 2005, Petitioner filed a request for continued examination (RCE) with fee and a submission under 37 C.F.R. §1.114 in the form of an information disclosure statement (IDS), however, the RCE was an improper RCE because Petitioner failed to satisfy the reply requirements of under 37 C.F.R. §1.114 in that the submission in reply to an Office action after final, after an *ex parte Quayle* action, or after Notice of Appeal must satisfy the requirements of 37 C.F.R. §1.111. (*See*: MPEP §706.07(h)(II))

The application went abandoned by operation of law after midnight 18 January, 2005.

The Office mailed a Notice of Abandonment on 28 June, 2005.

On 27 July, 2005, Petitioner filed a petition and averred non-receipt of a Notice of Improper RCE, however, Petitioner—as one registered to practice before the Office—is aware that such Notice is not required in that the triggering event (as discussed above) was Petitioner's failure to reply timely and properly to the final Office action mailed on 18 May, 2004.

Thus, Petitioner failed to support the petition properly consistent with the express requirements set forth in the Commentary at MPEP §711.03(c)(I)—to which Petitioner's attention always is drawn in these matters.

Out of an abundance of caution, Petitioners always are reminded that the filing of a petition under 37 C.F.R. §1.181 does not toll any periods that may be running any action by the Office and a petition seeking relief under the regulation must be filed within two (2) months of the act complained of (see: 37 C.F.R. §1.181(f)), and that those registered to practice and all others who make representations before the Office are reminded to inquire into the underlying facts of

[1] A proper reply is an amendment *prima facie* placing the application in condition for allowance, a Notice of Appeal, or an RCE (with fee and submission under 37 C.F.R. §1.114). (See: MPEP §711.03(c).)

representations made to the Office and support averments with the appropriate documentation– since all owe to the Office the continuing duty to disclose.[2]

The availability of applications and application papers online to applicants/practitioners who diligently associate their Customer Number with the respective application(s) now provides an applicant/practitioner on-demand information as to events/transactions in an application.

Allegations as to the Request to
Withdraw the Holding of Abandonment

The guidance in the Commentary at MPEP §711.03(c)(I) specifies the showing required and how it is to be made and supported.

Petitioner failed to make the showing required.

CONCLUSION

Accordingly, The petition under 37 C.F.R. §1.181 is **dismissed**.

ALTERNATIVE VENUE

Should Petitioner wish to revive the application, Petitioner may wish to properly file a petition to the Commissioner requesting revival of an application abandoned due to unintentional delay under 37 C.F.R. §1.137(b). (See: http://www.uspto.gov/web/offices/pac/mpep/documents/0700_711_03_c.htm#sect711.03c)

A petition to revive on the grounds of unintentional delay must be filed promptly and such petition must be accompanied by the reply, the petition fee, a terminal disclaimer and fee where appropriate and a statement that "the entire delay in filing the required reply from the due date for the reply until the filing of a grantable petition was unintentional." (The statement is in the form available online.)

Further correspondence with respect to this matter should be addressed as follows:

[2] See supplement of 17 June, 1999. The Patent and Trademark Office is relying on Petitioner's duty of candor and good faith and accepting a statement made by Petitioner. See Changes to Patent Practice and Procedure, 62 Fed. Reg. at 53160 and 53178, 1203 Off. Gaz. Pat. Office at 88 and 103 (responses to comments 64 and 109)(applicant obligated under 37 C.F.R. §10.18 to inquire into the underlying facts and circumstances when providing statements to the Patent and Trademark Office).

By Mail: Mail Stop PETITION
Commissioner for Patents
P. O. Box 1450
Alexandria, VA 22313-1450

By hand: U. S. Patent and Trademark Office
Customer Service Window, Mail Stop Petitions
Randolph Building
401 Dulany Street
Alexandria, VA 22314

By facsimile: **(571) 273-8300**
Attn: Office of Petitions

While telephone inquiries regarding this decision may be directed to the undersigned at (571) 272-3214, it is noted that all practice before the Office is in writing (see: 37 C.F.R. §1.2[3]) and the proper authority for action on any matter in this regard are the statutes (35 U.S.C.), regulations (37 C.F.R.) and the commentary on policy (MPEP). Therefore, no telephone discussion may be controlling or considered authority for Petitioner's action(s).

/John J. Gillon, Jr./
John J. Gillon, Jr.
Senior Attorney
Office of Petitions

[3] The regulations at 37 C.F.R. §1.2 provide:
§1.2 Business to be transacted in writing.
All business with the Patent and Trademark Office should be transacted in writing. The personal attendance of applicants or their attorneys or agents at the Patent and Trademark Office is unnecessary. The action of the Patent and Trademark Office will be based exclusively on the written record in the Office. No attention will be paid to any alleged oral promise, stipulation, or understanding in relation to which there is disagreement or doubt.

UNITED STATES PATENT AND TRADEMARK OFFICE

Commissioner for Patents
United States Patent and Trademark Office
P.O. Box 1450
Alexandria, VA 22313-1450
www.uspto.gov

HAYNES AND BOONE, LLP
IP SECTION
2323 VICTORY AVENUE
SUITE 700
DALLAS TX 75219

COPY MAILED
MAR 23 2009
OFFICE OF PETITIONS

In re Application of	:	
Ryu, et al.	:	
Application No. 09/882,043	:	DECISION
Filed: 18 June, 2001	:	
Attorney Docket No. AB-1604 US	:	

This is a decision on the petitions filed on 3 February, 2009, to revive an application under 37 C.F.R. §1.137(b) as having been abandoned due to unintentional delay.

> ***NOTE:*** *The address on the petition is different than that of record.*
>
> *If Petitioner desires to receive future correspondence regarding this application, the appropriate Notice must be submitted.*
>
> *A courtesy copy of this decision will be mailed to Petitioner.*
>
> *However, all future correspondence will be directed to the address of record until such time as appropriate instructions are received to the contrary.*

The petition as considered under 37 C.F.R. §1.137(b) is **GRANTED**.

As to Allegations of
Unintentional Delay

The requirements of a grantable petition pursuant to 37 C.F.R. §1.137(b) are the petition and fee therefor, a reply, a proper statement of unintentional delay under the regulation, and, where applicable, a terminal disclaimer and fee. (However, it does not appear that a terminal disclaimer and fee are due here.)

BACKGROUND

The record reflects as follows:

Petitioner failed to reply timely and properly to a final Office action mailed on 18 May, 2004, with reply due absent extension of time on or before 18 August, 2004.

On 13 August, 2004, Petitioner (former Counsel) filed *inter alia*, an after-final amendment, which Petitioner as one registered to practice before the Office is aware is not of right and was not a proper reply,[1] and the Examiner mailed an Advisory Action on 16 September, 2004.

On 17 November, 2004, Petitioner filed a request and fee for extension of time and a Notice of Appeal and fee.

On 14 January, 2005, Petitioner filed a request for continued examination (RCE) with fee and a submission under 37 C.F.R. §1.114 in the form of an information disclosure statement (IDS), however, the RCE was an improper RCE because Petitioner failed to satisfy the reply requirements of under 37 C.F.R. §1.114 in that the submission in reply to an Office action after final, after an *ex parte Quayle* action, or after Notice of Appeal must satisfy the requirements of 37 C.F.R. §1.111. (*See*: MPEP §706.07(h)(II))

The application went abandoned by operation of law after midnight 18 January, 2005.

The Office mailed a Notice of Abandonment on 28 June, 2005.

On 27 July, 2005, Petitioner filed a petition and averred non-receipt of a Notice of Improper RCE, however, Petitioner—as one registered to practice before the Office—is aware that such Notice is not required in that the triggering event (as discussed above) was Petitioner's failure to reply timely and properly to the final Office action mailed on 18 May, 2004. Because Petitioner failed to support the petition properly consistent with the express requirements set forth in the Commentary at MPEP §711.03(c)(I), the petition was dismissed on 8 December, 2008.

On 3 February, 2009, Petitioner filed, *inter alia*, a petition (with fee) pursuant to 37 C.F.R. §1.137(b) averring unintentional delay, a reply in the form of (the previously submitted request for continued examination (RCE) and fee and) a submission under the provisions of 37 C.F.R. §1.114 in the form of an amendment, and made the statement of unintentional delay (supplied by prior Counsel).

The availability of applications and application papers online to applicants/practitioners who diligently associate their Customer Number with the respective application(s) now provides an applicant/practitioner on-demand information as to events/transactions in an application.

---

[1] A proper reply is an amendment *prima facie* placing the application in condition for allowance, a Notice of Appeal, or an RCE (with fee and submission under 37 C.F.R. §1.114). (See: MPEP §711.03(c).)

Out of an abundance of caution, Petitioners always are reminded that those registered to practice and all others who make representations before the Office are reminded to inquire into the underlying facts of representations made to the Office and support averments with the appropriate documentation–since all owe to the Office the continuing duty to disclose.[2]

STATUTES, REGULATIONS AND ANALYSIS

Congress has authorized the Commissioner to "revive an application if the delay is shown to the satisfaction of the Commissioner to have been "unavoidable." 35 U.S.C. §133 (1994).[3]
The regulations at 37 C.F.R. §1.137(a) and (b) set forth the requirements for a Petitioner to revive a previously unavoidably or unintentionally, respectively, abandoned application under this congressional grant of authority.

Unintentional delays are those that do not satisfy the very strict statutory and regulatory requirements of unavoidable delay, and also, by definition, are not intentional.[4]))

As to Allegations of Unintentional Delay

It appears that the requirements under 37 C.F.R. §1.137(b) have been satisfied.

CONCLUSION

Accordingly, the petition under 37 C.F.R. §1.137(b) is **granted**.

The instant application is released to the Technology Center/AU 2814 for further processing in due course.

Petitioner may find it beneficial to view Private PAIR within a fortnight of the instant decision to ensure that the revival has been acknowledged by the TC/AU in response to this decision. It is

---

[2] See supplement of 17 June, 1999. The Patent and Trademark Office is relying on petitioner's duty of candor and good faith and accepting a statement made by Petitioner. See Changes to Patent Practice and Procedure, 62 Fed. Reg. at 53160 and 53178, 1203 Off. Gaz. Pat. Office at 88 and 103 (responses to comments 64 and 109)(applicant obligated under 37 C.F.R. §10.18 to inquire into the underlying facts and circumstances when providing statements to the Patent and Trademark Office).

[3] 35 U.S.C. §133 provides:

35 U.S.C. §133 Time for prosecuting application.
Upon failure of the applicant to prosecute the application within six months after any action therein, of which notice has been given or mailed to the applicant, or within such shorter time, not less than thirty days, as fixed by the Commissioner in such action, the application shall be regarded as abandoned by the parties thereto, unless it be shown to the satisfaction of the Commissioner that such delay was unavoidable.

[4] Therefore, by example, an unintentional delay in the reply might occur if the reply and transmittal form are to be prepared for shipment by the US Postal Service, but other pressing matters distract one's attention and the mail is not timely deposited for shipment.

noted that all inquiries with regard to that change in status need be directed to the TC/AU where that change of status must be effected—that does not occur in the Office of Petitions.

Telephone inquiries regarding this decision may be directed to the undersigned at (571) 272-3214—it is noted, however, that all practice before the Office is in writing (see: 37 C.F.R. §1.2[5]) and the proper authority for action on any matter in this regard are the statutes (35 U.S.C.), regulations (37 C.F.R.) and the commentary on policy (MPEP). Therefore, no telephone discussion may be controlling or considered authority for Petitioner's action(s).

/John J. Gillon, Jr./
John J. Gillon, Jr.
Senior Attorney
Office of Petitions

CC
DAVID S. PARK
18200 VON KARMAN/SUITE 725
IRVINE, CA 92612

[5] The regulations at 37 C.F.R. §1.2 provide:
§1.2 Business to be transacted in writing.
All business with the Patent and Trademark Office should be transacted in writing. The personal attendance of applicants or their attorneys or agents at the Patent and Trademark Office is unnecessary. The action of the Patent and Trademark Office will be based exclusively on the written record in the Office. No attention will be paid to any alleged oral promise, stipulation, or understanding in relation to which there is disagreement or doubt.

UNITED STATES PATENT AND TRADEMARK OFFICE

COMMISSIONER FOR PATENT
UNITED STATES PATENT AND TRADEMARK OFFIC
P.O. BOX 1450
ALEXANDRIA, VA 22313-1450
www.uspto.go

Paper No. 14

PHILIPS INTELLECTUAL PROPERTY & STANDARDS
P.O. BOX 3001
BRIARCLIFF MANOR NY 10510

MAIL

MAY 1 2 2004

DIRECTOR OFFICE
TECHNOLOGY CENTER 2600

In re Application of
David Cuccia
Application No. 09/882,080
Filed: June 15, 2001
For: INSTANT REPLAY OF DIGITAL VIDEO OPTIMIZED USING NON MPEG FRAME TAGS

DECISION ON PETITION TO WITHDRAW HOLDING OF ABANDONMENT

This is a decision on the petition filed October 31, 2003 and supplemented via facsimile transmission on April 19, 2004, which is treated as a Petition to Withdraw Holding of Abandonment pursuant to 37 C.F.R. § 1.181. No fee is required.

This application was held abandoned for failure to timely submit a response to the Final Office action mailed December 3, 2002 (paper No. 7). A Notice of Abandonment was mailed September 24, 2003 (paper No. 10).

Petitioner alleges that the Final Office action was not received.

The showing required to establish the failure to receive an Office communication must include a statement from the practitioner stating that the Office communication was not received by the Practitioner and attesting to the fact that a search of the file jacket and docket records indicates that the Office communication was not received. A copy of the docket record where the non-received Office communication would have been entered had it been received and docketed must be attached to and referenced in practitioner's statement. See "Withdrawing the Holding of Abandonment When Office Actions Are Not Received", 1156 Official Gazette 53 (November 16, 1993) and M.P.E.P. § 711.03(c), section II. The showing outlined above may not be sufficient if there are circumstances that point to a conclusion that the Office communication may have been lost after receipt rather than a conclusion that the Office communication was lost in the mail.

The supplemental statements submitted on April 19, 2004 taken together with the original statements and docket records submitted with the petition filed October 31, 2003 satisfy the requirements set forth above. Therefore, the Notice of Abandonment is vacated and the holding of abandonment is withdrawn.

The petition is **GRANTED.**

Due to the time lapse between the original mailing of the Final Office action and the date of this decision, the application file is being returned to the examiner for updating the search and other action as appropriate. From there, the file will be forwarded to the Technology Center's technical support staff for mailing of the updated Office action. The shortened

statutory period that was originally set forth will be reset to run from the date of the new mailing.

Krista Zele, Special Program Examiner
Technology Center 2600
Communications
(703) 305-4701

UNITED STATES PATENT AND TRADEMARK OFFICE

Commissioner for Patents
United States Patent and Trademark Office
P.O. Box 1450
Alexandria, VA 22313-1450
www.uspto.gov

COPY MAILED

MAR 1 4 2006

OFFICE OF PETITIONS

Blakely, Sokoloff, Taylor & Zafman LLP
Seventh Floor, 12400 Wilshire Boulevard
Los Angeles, CA 90025-1026

In re Application of
Jay H. Connelly
Application No. 09/882,105
Filed: June 15, 2001
Docket No. 042390.P11864

DECISION ON PETITION
UNDER 37 CFR 1.137(b)

This is a decision on the petition under 37 CFR 1.137(b), filed March 3, 2006, to revive the above-identified application.

The petition is **GRANTED**.

The application became abandoned for failure pay the issue fee and publication fee in a timely manner in response to the Notice of Allowance and Fee(s) Due, mailed July 7, 2005, which set a three (3) month statutory period for reply. Accordingly, the application became abandoned on October 8, 2005. A Notice of Abandonment was mailed on February 3, 2006.

37 CFR 1.137(b)(3) requires a statement that the entire delay in filing the required reply from the due date for the reply until the filing of a grantable petition pursuant to 37 CFR 1.137(b) was unintentional. The statement contained in the petition varies from the language required by 37 CFR 1.137(b)(3); however, the statement is being construed as the statement required by 37 CFR 1.137(b)(3). Petitioner must notify the Office if this is **not** a correct interpretation.

This matter is being referred to the Office of Patent Publication.

Telephone inquiries concerning the issuance of the application into a patent should be directed to the Office of Patent Publication, Customer Service at (571) 272-4200. Telephone inquiries specifically concerning this decision should be directed to the undersigned at (571) 272-3211.

Christina Tartera Donnell

Christina Tartera Donnell
Senior Petitions Attorney
Office of Petitions

UNITED STATES PATENT AND TRADEMARK OFFICE

Commissioner for Patents
United States Patent and Trademark Office
P.O. Box 1450
Alexandria, VA 22313-1450
www.uspto.gov

AKIN GUMP STRAUSS HAUER & FELD
ONE COMMERCE SQUARE
2005 MARKET STREET, SUITE 2200
PHILADELPHIA PA 19103

COPY MAILED

OCT 24 2005

OFFICE OF PETITIONS

In re Application of	:	
Shuo-Yen Robert Li	:	
Application No. 09/882,112	:	ON PETITION
Filed: June 15, 2001	:	
Attorney Docket No. LI 23	:	

This is a decision on the petition, filed October 17, 2005, under 37 CFR 1.313(c)(2) to withdraw the above-identified application from issue after payment of the issue fee.

The petition is **GRANTED.**

The above-identified application is withdrawn from issue for consideration of a submission under 37 CFR 1.114 (request for continued examination). See 37 CFR 1.313(c)(2).

Petitioner is advised that the issue fee paid on September 8, 2005 in the above-identified application cannot be refunded. If, however, the above-identified application is again allowed, petitioner may request that it be applied towards the issue fee required by the new Notice of Allowance.[1]

Telephone inquiries should be directed to the undersigned at (571) 272-3208.

The examiner of Technology Center AU 2661 will consider the request for continued examination under 37 CFR 1.114.

Karen Creasy

Karen Creasy
Petitions Examiner
Office of Petitions
Office of the Deputy Commissioner
for Patent Examination Policy

---

[1] The request to apply the issue fee to the new Notice may be satisfied by completing and returning the new Issue Fee Transmittal Form PTOL-85(b), which includes the following language thereon: "Commissioner for Patents is requested to apply the Issue Fee and Publication Fee (if any) or re-apply any previously paid issue fee to the application identified above." Petitioner is advised that, whether a fee is indicated as being due or not, the Issue Fee Transmittal Form **must** be completed and timely submitted to avoid abandonment. Note the language in bold text on the first page of the Notice of Allowance and Fee(s) Due (PTOL-85).

UNITED STATES PATENT AND TRADEMARK OFFICE

COMMISSIONER FOR PATENTS
UNITED STATES PATENT AND TRADEMARK OFFICE
P.O. BOX 1450
ALEXANDRIA, VA 22313-1450
www.uspto.gov

NATIONAL STARCH AND CHEMICAL COMPANY
P.O. BOX 6500
BRIDGEWATER, NJ 08807-3300

FAX RECEIVED

MAY 25 2005

OFFICE OF PETITIONS
ON PETITION

In re Application of :
David P. Huang, et al. :
Application No. 09/882,123 :
Filed: June 15, 2001 :
Attorney Docket No. 1880 :

This is a decision on the petition under 37 CFR 1.137(b), filed February 2, 2005, to revive the above-identified application.

The petition is **GRANTED**.

The application became abandoned for failure to timely reply to a final Office action mailed July 19, 2004. This decision precedes the mailing of a Notice of Abandonment.

37 CFR 1.137(b)(3) requires a statement that the entire delay in filing the required reply from the due date for the reply until the filing of a grantable petition pursuant to 37 CFR 1.137(b) was unintentional. Although the statement contained in the petition varies from the language required by 37 CFR 1.137(b)(3), the statement will be construed as the statement required by 37 CFR 1.137(b)(3). Petitioner must notify the Office if this is **not** a correct interpretation of the statement contained in the instant petition.

The application is revived for consideration of a submission under 37 CFR 1.114 (request for continued examination).

Telephone inquiries concerning this decision should be directed to the undersigned at (571) 272-3204.

The application file is being forwarded to Technology Center AU 1761, for further processing of the request for continued examination under 37 CFR 1.114 filed February 2, 2005.

Sherry D. Brinkley
Petitions Examiner
Office of Petitions
Office of the Deputy Commissioner
for Patent Examination Policy

UNITED STATES PATENT AND TRADEMARK OFFICE

Commissioner for Patents
United States Patent and Trademark Office
P.O. Box 1450
Alexandria, VA 22313-1450
www.uspto.gov

Paper No. 080404

AUG 12 2004

DARBY & DARBY, P.C.
805 THIRD AVENUE
NEW YORK, NY 10022

In re Application of:	:	
ASSAF GOVARI	:	
Serial No.: 09/882,125	:	DECISION ON REQUEST TO WITHDRAW
Filed: June 15, 2001	:	FROM RECORD
Attorney Docket No.: **06727/0200537-USO**	:	

This is a decision on the request to withdraw as attorney/agent of record under 37 C.F.R. § 1.36, filed December 19, 2003.

A grantable request to withdraw as attorney of record must be signed by every attorney seeking to withdraw or contain a clear indication that one attorney is signing on behalf of others. A request to withdraw will not be approved unless at least thirty (30) days would remain between the date of approval and the later of the expiration date of a time to file a response or the expiration date of the maximum time period, which can be extended under 37 C.F.R. § 1.136(a).

The request meets all the above stated requirements. The request was signed by S. Peter Ludwig, on behalf of himself and all the attorneys/agents of record. There is no outstanding Office action at this time.

The request is **APPROVED**.

All future communications from the Office will be directed Peter Galloway, at the below address, until otherwise notified by applicant.

Inquiries related to this decision should be directed to Lissi Marquis at (571) 272-1596.

Lissi Marquis, Special Programs Examiner
Technology Center 2800
Semiconductors, Electrical and Optical
Systems and Components

cc: PETER GALLOWAY
LADAS & PARRY
26 WEST 61ST STREET
NEW YORK, NY 10023

UNITED STATES PATENT AND TRADEMARK OFFICE

COMMISSIONER FOR PATENTS
UNITED STATES PATENT AND TRADEMARK OFFICE
WASHINGTON, D.C. 20231
www.uspto.gov

Paper No. 10

AUDLEY A. CIAMPORCERO JR.
JOHNSON & JOHNSON
ONE JOHNSON & JOHNSON PLAZA
NEW BRUNSWICK, NJ 08933-7003

COPY MAILED

DEC 0 4 2002

OFFICE OF PETITIONS

In re Application of :
Assaf Govari :
Application No. 09/882,127 :
Filed: June 15, 2001 :
Attorney Docket No. BIO-131 :

ON PETITION

This is a decision on the petition under 37 CFR 1.313(e) filed November 27, 2002, which is being treated as a petition under 37 CFR 1.313(c)(2) to withdraw the above-identified application from issue after payment of the issue fee.

The petition is **GRANTED**.

The above-identified application is withdrawn from issue for consideration of a submission under 37 CFR 1.114 (request for continued examination). See 37 CFR 1.313(c)(2).

Petitioner is advised that the issue fee paid on November 12, 2002 in the above-identified application cannot be refunded. If, however, the above-identified application is again allowed, petitioner may request that it be applied towards the issue fee required by the new Notice of Allowance.[1]

Telephone inquiries should be directed to Wan Laymon at (703) 306-5685.

After receipt of the application in the Office of Petitions, the application will be forwarded to Technology Center AU 3737 for processing of the request for continued examination under 37 CFR 1.114 and for consideration of the concurrently filed IDS.

Frances Hicks

Frances Hicks
Lead Petitions Examiner
Office of Petitions
Office of the Deputy Commissioner
for Patent Examination Policy

---

[1] The request to apply the issue fee to the new Notice must be made in writing and should be accompanied by the new Issue Fee Transmittal Form PTOL-85(b), along with a copy of this decision. Additionally, if the issue fee has increased from the previously paid issue fee, the balance due must be submitted. **Failure to timely request *in writing* that the previously paid issue fee be applied towards the new Notice and payment of any balance due will result in the abandonment of the application.**

UNITED STATES PATENT AND TRADEMARK OFFICE

Commissioner for Patents
United States Patent and Trademark Office
P. O. Box 1450
Alexandria, VA 22313-1450
www.uspto.gov

Paper No. 9

CHRISTIE PARKER & HALE LLP
350 WEST COLORADO BOULEVARD
SUITE 500
PASADENA, CA 91105

COPY MAILED

MAY 1 4 2003

OFFICE OF PETITIONS

In re Application of	:	
Joseph P. Donahue et al	:	
Application No. 09/882,138	:	DECISION GRANTING PETITION
Filed: June 15, 2001	:	UNDER 37 CFR 1.137(f)
Attorney Docket No. 45223/TJD/0125	:	

This is a decision on the petition, filed by facsimile transmission on May 9, 2003, to revive the instant nonprovisional application under the unintentional provisions of 37 CFR 1.137(f).

The petition is **GRANTED**.

Petitioner states that the instant nonprovisional application is the subject of an application filed in a foreign country on June 13, 2002. However, the U.S. Patent and Trademark Office was unintentionally not notified of this filing within 45 days subsequent to the filing of the subject application in a foreign country.

In view of the above, this application became abandoned pursuant to 35 U.S.C. § 122(b)(2)(B)(iii) and 37 CFR 1.213(c) for failure to timely notify the Office of the filing of an application in a foreign country, or under a multilateral international agreement, that requires publication of applications 18 months after filing.

A petition under 37 CFR 1.137(f) must be accompanied by:

(1) the reply which is met by the notification of such filing in a foreign country or under a multinational treaty;

(2) the petition fee as set forth in 37 CFR 1.17(m); and

(3) a statement that the entire delay in filing the required reply from the due date of the reply until the filing of a grantable petition was unintentional.

The instant petition has been found to be in compliance with 37 CFR 1.137(f). Accordingly, the failure to timely notify the Office of a foreign or international filing within 45 days after the date of filing of such foreign or international application as provided by 35 U.S.C. § 122(b)(2)(B)(iii) and 37 CFR 1.213(c) is accepted as having been unintentionally delayed.

The previous Request and Certification under 35 U.S.C. § 122(b)(2)(B)(i) has been rescinded. A Notice Regarding Rescission of Nonpublication Request which sets forth the projected publication date of August 21, 2003 accompanies this decision on petition.

Any inquiries concerning this decision may be directed to the undersigned at (703) 305-8680.

This application is being forwarded to Technology Center Art Unit 2672 for examination in due course.

Frances Hicks

Frances Hicks
Petitions Examiner
Office of Petitions
Office of the Deputy Commissioner
for Patent Examination Policy

ATTACHMENT: Notice Regarding Rescission of Nonpublication Request

UNITED STATES PATENT AND TRADEMARK OFFICE

UNDER SECRETARY OF COMMERCE FOR INTELLECTUAL PROPERTY AND
DIRECTOR OF THE UNITED STATES PATENT AND TRADEMARK OFFICE
WASHINGTON, DC 20231
www.uspto.gov

Lance J. Lieberman, Esq.
Cohen, Pontani, Lieberman & Pavane
Suite 1210
551 Fifth Avenue
New York, NY 10176

MAILED

JUL 29 2002

DIRECTOR'S OFFICE
TECHNOLOGY CENTER 3600

In re application of
Sergio Piccioli
Application No. 09/882,143
Filed: June 14, 2001
For: METHOD FOR PREDICTIVE DETERMINATION OF FINANCIAL INVESTMENT PERFORMANCE

DECISION ON REQUEST FOR WITHDRAWAL OF ATTORNEY

This is a decision on the request filed on June 24, 2002, under 37 CFR 1.36 and MPEP 402.06, requesting permission to withdraw as the attorney of record in the above-identified application.

The request is **DISMISSED AS MOOT**.

Under 37 CFR 1.36 an attorney may withdraw only upon application to and approval by the Commissioner. It should be noted that a withdrawal is effective when approved, not when filed. For approval of such a request the following conditions must be met:

A) Each attorney of record must sign the notice of withdrawal, or the notice must contain a clear indication of one attorney signing on behalf of another, because the Office does not recognize law firms;
B) There must be at least 30 days between approval of the withdrawal and the later of the expiration date of a time period for reply or the expiration date of the period which can be obtained by a petition and fee for extension of time under 37 CFR 1.136(a);
C) A proper reason for the withdrawal as enumerated in 37 CFR 10.40(b) or subsection (1)-(6) of 37 CFR 10.40(c) must be provided;
D) The applicant or patent owner must have been notified of the withdrawal as provided for in 37 CFR 1.36.

The request to withdraw as attorney is dismissed as moot. Your power of attorney in this case has been revoked by the applicant. Such notice was mailed to you on June 25, 2002.

In summary, the request is **DISMISSED AS MOOT**.

Randolph Reese, Special Programs Examiner
Patent Technology Center 3600
(703) 308-2121
Facsimile No.: (703) 605-0586

RR/dw:; 7/18/02

UNITED STATES PATENT AND TRADEMARK OFFICE

COMMISSIONER FOR PATENTS
UNITED STATES PATENT AND TRADEMARK OFFICE
WASHINGTON, D.C. 20231
www.uspto.gov

Paper No. 7

Fitch Even Tabin and Flannery
120 South LaSalle Street
Suite 1600
Chicago, IL 60603-3406

COPY MAILED

MAY 28 2002

OFFICE OF PETITIONS

In re Application of :
Steponas Dziugys, et al. :
Application No. 09/882,164 :
Filed: June 15, 2001 :
Attorney Docket No. 67064 :

ON PETITION

This is a decision on the petition under 37 CFR 1.137(b), filed March 29, 2002, to revive the above-identified application.

The petition is **GRANTED**.

The above-identified application became abandoned for failure to respond in a timely manner in reply to the Notice To File Missing Parts of Non-Provisional Application mailed August 13, 2001, which set a shortened statutory period for reply of two(2) months. No extensions of time under the provisions of 37 CFR 1.136(a) were obtained. Accordingly, the application became abandoned on October 14, 2001.

37 CFR 1.137(b)(3) requires a statement that the entire delay in filing the required reply from the due date for the reply until the filing of a grantable petition pursuant to 37 CFR 1.137(b) was unintentional. If the statement contained in the instant petition varies from the language required by 37CFR 1.137(b)(3), the statement contained in the instant petition is being construed as the statement required by 37 CFR 1.137(b)(3) and petitioner must notify the Office if this is **not** a correct interpretation of the statement contained in the instant petition.

Telephone inquiries concerning this decision should be directed to Cheryl Gibson-Baylor at (703)308-5111, or in her absence, Sherry Brinkley at (703)305-9220.

The application file is being forwarded to Office of Initial Patent Examination for further processing.

Cheryl Gibson-Baylor
Petitions Examiner
Office of Petitions
Office of the Deputy Commissioner
for Patent Examination Policy

Sherry Brinkley
Petitions Examiner

UNITED STATES PATENT AND TRADEMARK OFFICE

COMMISSIONER FOR PATENTS
UNITED STATES PATENT AND TRADEMARK OFFICE
P.O. BOX 1450
ALEXANDRIA, VA 22313-1450
www.uspto.gov

HUMAN GENOME SCIENCES INC
INTELLECTUAL PROPERTY DEPT.
14200 SHADY GROVE ROAD
ROCKVILLE MD 20850

COPY MAILED
APR 2 7 2004
OFFICE OF PETITIONS

Applicant: Ruben et al.
Appl. No.: 09/882,171
Filing Date: June 18, 2001
Title: 186 HUMAN SECRETED PROTEINS
Attorney Docket No.: PZ002P2C1
Pub. No.: US 2003/0175858 A1
Pub. Date: September 18, 2003

This is in response to the request for correction of patent application publication under 37 CFR 1.221(b), which was filed on November 13, 2003.

The request is DISMISSED.

The instant request is that the application be republished because the patent application publication contains two errors on the front page of the patent application publication wherein the filing date for Provisional Application No. 60/057,761 is incorrectly listed as September 5, 1997, instead of "August 22, 1997, Provisional Application No. "60/061,660 filed on October 9, 1997" is listed instead of "60/061,060 filed on October 2, 1997" and in claim 1 clause (h) the SEQ ID NO: designation should be changed from "y" to "Y" and in clause (i) the phrase "only a residues or of only t residues" should be changed to "only A residues or of only T residues".

37 CFR 1.221(b) is applicable "only when the Office makes a material mistake which is apparent from Office records . . . Any request for a corrected publication or revised patent application publication other than provided as provided in paragraph (a) of this section must be filed within two months from the date of the patent application publication. This period is not extendable." A material mistake must affect the public's ability to appreciate the technical disclosure of the patent application publication, to determine the scope of the patent application publication, or to determine the scope of the provisional rights that an applicant may seek to enforce upon issuance of a patent.[1]

The typographical errors in claim 1 clause (h) wherein the SEQ ID NO: designation should be changed from "y" to "Y" and in clause (i) wherein the phrase "only a residues or of only t residues" should be changed to "only A residues or of only T residues" are Office errors, but they are minor typographical errors, which are clearly understandable. The mistakes are clearly understandable as the symbols are used elsewhere in the specification and claims correctly and

[1] Changes to Implement Eighteen-Month Publication of Patent Applications, 65 FR 57023, 57038 (Sept. 20, 2000), 1239 Off. Gaz. Pat. Office Notices 63, 75 (Oct. 10, 2000) (final rule).

phrased are not read in a vacuum. The mistake are minor typographical errors which are clearly understandable from reading the specification and sentence in which the symbols are used, as terms and phrases are not read in a vacuum. The mistake does not affect the public's ability to appreciate the technical disclosure of the patent application publication, or determine the scope of the patent application publication or determine the scope of the provisional rights that an applicant may seek to enforce upon issuance of a patent.

With respect to the Provisional Applications, the Office correctly published the application in accordance with 37 CFR 1.215(a). According to the Office records, the filing date for Provisional Application No. 60/057,761 is September 5, 1997 and the Office uses the filing date in the Office records, not the filing date provided by applicant. The first Filing Receipt provided by the Office, which listed Provisional Application No. 60/061,660 was correct, as item 95 in the benefit claim in the first sentence of the application (and the Declaration filed with the application) listed Provisional Application No. "60/061,660 filed on October 9, 1997", not "60/061,060 filed on October 2, 1997" as argued by applicant now and earlier in the request for a corrected filing receipt. The Office's electronic records have been corrected, as Provisional Application No. "60/061,060" has been changed back to"60/061,660, " as that Application No. was listed in the benefit claim. (Corrected Filing Receipt is enclosed.) It is noted that applicant has not amended the application to correct the error in the benefit claim in the first line of the application.

It is noted that applicant is attempting to claim the benefit of an earlier filed provisional application. Since the benefit claim was not filed within the later of four months from the actual filing date of the application or sixteen months from the filing date of the prior application, the benefit of the earlier filed application is considered to have been waived. To make a late benefit claim to the earlier filed application, applicant must submit a petition to accept an unintentionally delayed claim under 35 U.S.C. 119(e) for the benefit of the earlier filed provisional application. The petition must include 1) the surcharge ($1330.00) set forth in 37 CFR 1.14(t) and 2) a statement that the entire delay between the date the claim was due under paragraph (a)(5) of this section and the date the claim was filed was unintentional. The petition must also include a proper reference (amendment) to the prior applications in order for the petition to be granted.[2]

The applicant is advised that a "request for republication of an application previously published" may be filed under 37 CFR 1.221(a). Such a request for republication "must include a copy of the application in compliance with the Office's electronic filing system requirements and be accompanied by the publication fee set forth in § 1.18(d) and the processing fee set forth in § 1.17(i)." If the request for republication does not comply with the electronic filing system requirements, the republication will not take place and the publication fee set forth in § 1.18(d) will be refunded. The processing fee will be retained.

Any request for republication under 37 CFR 1.221(a), should be submitted via the EFS system and questions or request for reconsideration of this decision, should be addressed as follows:

---

[2]See Claiming the Benefit of a Prior-Filed Application under 35 U.S.C. §§ 119(e), 120, 121, and 365(c), 1268 Off. Gaz. Pat. Office Notices 89 (March 18, 2003).

By mail to: Mail Stop PGPUB
Commissioner for Patents
P.O. Box 1450
Alexandria, VA 22313-1450

By facsimile: 703-305-8568

The application will be examined in due course.

Inquiries relating to this matter may be directed to Mark Polutta at (703) 308-8122 (voice) or (703) 746-3465 (facsimile).

Mark O. Polutta
Office of Patent Legal Administration
Office of the Deputy Commissioner
for Patent Examination Policy

Enclosure: Corrected Filing Receipt

UNITED STATES PATENT AND TRADEMARK OFFICE

Commissioner for Patents
United States Patent and Trademark Office
Washington, D.C. 20231
www.uspto.gov

Paper No. 12

Barbara S. Pedersen
Pedersen and Company, PLLC
PO Box 2666
Boise, ID 83701

COPY MAILED

FEB 21 2003

OFFICE OF PETITIONS

In re Application of :
Muhlestein, Todd J. :
Application No. 09/882,212 : ON PETITION
Filed: June 15, 2001 :
Attorney Docket No. 2657 :

This is a decision on the petition under 37 CFR 1.137(b), filed February 5, 2003, to revive the above-identified application.

The petition is **GRANTED**.

The above-identified application became abandoned for failure to reply in a timely manner to the non-final Office action mailed March 13, 2002, which set a shortened statutory period for reply of three months. No extensions of time under the provisions of 37 CFR 1.136(a) have been obtained. Accordingly, the application became abandoned on June 14, 2002.

The application is being forwarded to Technology Center AU 3641.

Telephone inquiries concerning this decision should be directed to Latrice Bond at (703) 308-6911.

Latrice Bond

Latrice Bond
Petitions Examiner
Office of Petitions
Office of the Deputy Commissioner
for Patent Examination Policy

UNITED STATES PATENT AND TRADEMARK OFFICE

Commissioner for Patents
United States Patent and Trademark Office
P.O. Box 1450
Alexandria, VA 22313-1450
www.uspto.gov

CLARK & ELBING LLP
101 FEDERAL STREET
BOSTON, MA 02110

COPY MAILED

OCT 1 8 2005

OFFICE OF PETITIONS

In re Application of	:
Bjarne Due Larsen et al	:
Application No. 09/882,291	: DECISION GRANTING PETITION
Filed: June 15, 2001	: UNDER 37 CFR 1.313(c)(2)
Attorney Docket No. 50412/012003	:

This is a decision on the petition, filed October 14, 2005, under 37 CFR 1.313(c)(2) to withdraw the above-identified application from issue after payment of the issue fee.

The petition is **GRANTED**.

The above-identified application is withdrawn from issue for consideration of a submission under 37 CFR 1.114 (request for continued examination). See 37 CFR 1.313(c)(2).

Petitioner is advised that the issue fee paid on April 8, 2005 in the above-identified application cannot be refunded. If, however, the above-identified application is again allowed, petitioner may request that it be applied towards the issue fee required by the new Notice of Allowance.[1]

Telephone inquiries should be directed to the undersigned at (571) 272-3218.

This matter is being referred to Technology Center AU 1648 for processing of the request for continued examination under 37 CFR 1.114 and for consideration of the concurrently filed petition to correct inventorship filed pursuant to the provisions of 37 CFR 1.48(b).

Frances Hicks
Petitions Examiner
Office of Petitions

---

[1] *The request to apply the issue fee to the new Notice may be satisfied by completing and returning the new Issue Fee Transmittal Form PTOL-85(b) (along with any balance due or the amount due at the time of payment), which includes the following language thereon: "Commissioner for Patents is requested to apply the Issue Fee and Publication Fee (if any) or re-apply any previously paid issue fee to the application identified above." Petitioner is advised that, whether a fee is indicated as being due or not, the Issue Fee Transmittal Form* ***must*** *be completed and timely submitted to avoid abandonment. Note the language in bold text on the first page of the Notice of Allowance and Fee(s) Due (PTOL-85).*

UNITED STATES PATENT AND TRADEMARK OFFICE

Commissioner for Patents
United States Patent and Trademark Office
P.O. Box 1450
Alexandria, VA 22313-1450
www.uspto.gov

CLARK & ELBING LLP
101 FEDERAL STREET
BOSTON, MA 02110

COPY MAILED
JUN 04 2007
OFFICE OF PETITIONS

In re Application of
Bjarne Due Larsen et al
Application No. 09/882,291
Filed: June 15, 2001
Attorney Docket No. 50412/0122003

DECISION ON PETITION
UNDER 37 CFR 1.55(c)

This is a decision on the petition under 37 CFR 1.55(c), filed January 13, 2006 and supplemented on August 28, 2006, to accept an unintentionally delayed claim under 35 U.S.C. § 119(a)-(d) for the benefit of priority to foreign Danish Application No. PA 2000 01486, filed October 5, 2000.

The petition is **GRANTED**.

This pending nonprovisional application was filed after November 29, 2000, and did not include a reference to the foreign application, for which benefit is now sought, within the later of four months from the actual filing date of the application or sixteen months from the filing date of the prior foreign application. Since the claim for priority is submitted after the period specified in 37 CFR 1.55(a)(1)(i), this is an appropriate petition under the provisions of 37 CFR 1.55(c).

A petition under 37 CFR 1.55(c) to accept an unintentionally delayed claim for priority requires:

(1) The nonprovisional application claiming the benefit of an earlier filing date must be filed on or after November 29, 2000;

(2) the claim submitted with the petition must identify the prior foreign application for which priority is claimed, as well as any foreign application for the same subject matter and having a filing date before that of the application for which priority is claimed, by the application number, country, and the filing date and be included either in an oath or declaration (37 CFR 1.63(c)(2)) or in an Application Data Sheet (37 CFR 1.76(b)(6));

(3) the surcharge as set forth in 37 CFR 1.17(t);

(4) a statement that the entire delay between the date the claim was due under 37 CFR 1.55(a)(1) and the date the claim was filed was unintentional (the Director may require additional information where there is a question whether the delay was unintentional); and

(5) the above-identified nonprovisional application must be filed within 12 months of the filing date of the foreign application.

This application has a filing date of June 15, 2001, which is within 12 months of October 5, 2000 (the filing date of the foreign application to which benefit is now being claimed). An Application Data Sheet was received, which identifies the foreign application for which priority is claimed by application number, country and filing date. The required petition fee of $1,370 was received with the original petition of January 13, 2006. Lastly, petitioner has provided an adequate statement of unintentional delay.

All of the above requirements having been satisfied, the late claim for benefit of priority under 35 U.S.C. § 119(a)-(d) is accepted as being unintentionally delayed.

The rule at 37 CFR § 1.55(c) requires a statement that the entire delay between the date the claim was due under 37 CFR § 1.55(a)(1) and the date the claim was filed was unintentional. Since the statement appearing in the petition varies from the required language, the statement is being construed as the statement required by 37 CFR §1.55(c). If this is not a correct reading of the statement appearing in the petition, petitioner should promptly notify the Office.

The granting of the petition to accept the delayed benefit claim to the prior-filed application under 37 CFR 1.55(c) should not be construed as meaning that this application is entitled to the benefit of the prior-filed application. In order for this application to be entitled to the benefit of the prior-filed application, all other requirements under 35 U.S.C. § 119(a)-(d) and 37 CFR 1.55(a)(1) must be met. Similarly, the fact that the corrected Filing Receipt accompanying this decision on petition includes the prior-filed application should not be construed as meaning that applicant is entitled to the claim for benefit of priority to the prior-filed application noted thereon. Accordingly, the examiner will, in due course, consider this benefit claim and determine whether this application is entitled to the benefit of the earlier filing date.

A corrected Filing Receipt, which includes the priority claim to the prior-filed foreign application, accompanies this decision on petition.

This application is being referred to Technology Center AU 1648 for appropriate action in accordance with this decision on petition and for consideration of the amendment under 37 CFR 1.312, filed June 9, 2006.

Any inquiries directly pertaining to this matter may be directed to the undersigned at (571) 272-3218.

Frances Hicks

Frances Hicks
Petitions Examiner
Office of Petitions

ATTACHMENT: Corrected Filing Receipt

UNITED STATES PATENT AND TRADEMARK OFFICE

UNITED STATES DEPARTMENT OF COMMERCE
United States Patent and Trademark Office
Address: COMMISSIONER FOR PATENTS
P.O. Box 1450
Alexandria, Virginia 22313-1450
www.uspto.gov

APPL NO.	FILING OR 371(c) DATE	ART UNIT	FIL FEE REC'D	ATTY.DOCKET NO	TOT CLMS	IND CLMS
09/882,291	06/15/2001	1648	777	50412/012003	8	2

CONFIRMATION NO. 7293

CORRECTED FILING RECEIPT

OC000000024202982

21559
CLARK & ELBING LLP
101 FEDERAL STREET
BOSTON, MA 02110

Date Mailed: 06/04/2007

Receipt is acknowledged of this regular Patent Application. It will be considered in its order and you will be notified as to the results of the examination. Be sure to provide the U.S. APPLICATION NUMBER, FILING DATE, NAME OF APPLICANT, and TITLE OF INVENTION when inquiring about this application. Fees transmitted by check or draft are subject to collection. Please verify the accuracy of the data presented on this receipt. **If an error is noted on this Filing Receipt, please mail to the Commissioner for Patents P.O. Box 1450 Alexandria Va 22313-1450. Please provide a copy of this Filing Receipt with the changes noted thereon. If you received a "Notice to File Missing Parts" for this application, please submit any corrections to this Filing Receipt with your reply to the Notice. When the USPTO processes the reply to the Notice, the USPTO will generate another Filing Receipt incorporating the requested corrections (if appropriate).**

Applicant(s)

Bjarne Due Larsen, Bronshoj, DENMARK;
Daniel R. Kapusta, Slidell, LA;

Assignment For Published Patent Application

Zealand Pharmaceuticals A/S

Power of Attorney: The patent practitioners associated with Customer Number **21559**.

Domestic Priority data as claimed by applicant

This appln claims benefit of 60/251,671 12/06/2000
and claims benefit of 60/298,186 06/13/2001

Foreign Applications

DENMARK PA 2000 01486 10/05/2000
DENMARK PA 2000 00944 06/16/2000

If Required, Foreign Filing License Granted: 08/10/2001

The country code and number of your priority application, to be used for filing abroad under the Paris Convention, is US09/882,291

Projected Publication Date: Not Applicable

Non-Publication Request: No

Early Publication Request: No

**** SMALL ENTITY ****

Title

A DIURETIC NOCICEPTIN DERIVATIVE

Preliminary Class

514

PROTECTING YOUR INVENTION OUTSIDE THE UNITED STATES

Since the rights granted by a U.S. patent extend only throughout the territory of the United States and have no effect in a foreign country, an inventor who wishes patent protection in another country must apply for a patent in a specific country or in regional patent offices. Applicants may wish to consider the filing of an international application under the Patent Cooperation Treaty (PCT). An international (PCT) application generally has the same effect as a regular national patent application in each PCT-member country. The PCT process **simplifies** the filing of patent applications on the same invention in member countries, but **does not result** in a grant of "an international patent" and does not eliminate the need of applicants to file additional documents and fees in countries where patent protection is desired.

Almost every country has its own patent law, and a person desiring a patent in a particular country must make an application for patent in that country in accordance with its particular laws. Since the laws of many countries differ in various respects from the patent law of the United States, applicants are advised to seek guidance from specific foreign countries to ensure that patent rights are not lost prematurely.

Applicants also are advised that in the case of inventions made in the United States, the Director of the USPTO must issue a license before applicants can apply for a patent in a foreign country. The filing of a U.S. patent application serves as a request for a foreign filing license. The application's filing receipt contains further information and guidance as to the status of applicant's license for foreign filing.

Applicants may wish to consult the USPTO booklet, "General Information Concerning Patents" (specifically, the section entitled "Treaties and Foreign Patents") for more information on timeframes and deadlines for filing foreign patent applications. The guide is available either by contacting the USPTO Contact Center at 800-786-9199, or it can be viewed on the USPTO website at http://www.uspto.gov/web/offices/pac/doc/general/index.html.

For information on preventing theft of your intellectual property (patents, trademarks and copyrights), you may wish to consult the U.S. Government website, http://www.stopfakes.gov. Part of a Department of Commerce initiative, this website includes self-help "toolkits" giving innovators guidance on how to protect intellectual property in specific countries such as China, Korea and Mexico. For questions regarding patent enforcement issues, applicants may call the U.S. Government hotline at 1-866-999-HALT (1-866-999-4158).

LICENSE FOR FOREIGN FILING UNDER
Title 35, United States Code, Section 184
Title 37, Code of Federal Regulations, 5.11 & 5.15

GRANTED

The applicant has been granted a license under 35 U.S.C. 184, if the phrase "IF REQUIRED, FOREIGN FILING LICENSE GRANTED" followed by a date appears on this form. Such licenses are issued in all applications where

the conditions for issuance of a license have been met, regardless of whether or not a license may be required as set forth in 37 CFR 5.15. The scope and limitations of this license are set forth in 37 CFR 5.15(a) unless an earlier license has been issued under 37 CFR 5.15(b). The license is subject to revocation upon written notification. The date indicated is the effective date of the license, unless an earlier license of similar scope has been granted under 37 CFR 5.13 or 5.14.

This license is to be retained by the licensee and may be used at any time on or after the effective date thereof unless it is revoked. This license is automatically transferred to any related applications(s) filed under 37 CFR 1.53(d). This license is not retroactive.

The grant of a license does not in any way lessen the responsibility of a licensee for the security of the subject matter as imposed by any Government contract or the provisions of existing laws relating to espionage and the national security or the export of technical data. Licensees should apprise themselves of current regulations especially with respect to certain countries, of other agencies, particularly the Office of Defense Trade Controls, Department of State (with respect to Arms, Munitions and Implements of War (22 CFR 121-128)); the Bureau of Industry and Security, Department of Commerce (15 CFR parts 730-774); the Office of Foreign Assets Control, Department of Treasury (31 CFR Parts 500+) and the Department of Energy.

NOT GRANTED

No license under 35 U.S.C. 184 has been granted at this time, if the phrase "IF REQUIRED, FOREIGN FILING LICENSE GRANTED" DOES NOT appear on this form. Applicant may still petition for a license under 37 CFR 5.12, if a license is desired before the expiration of 6 months from the filing date of the application. If 6 months has lapsed from the filing date of this application and the licensee has not received any indication of a secrecy order under 35 U.S.C. 181, the licensee may foreign file the application pursuant to 37 CFR 5.15(b).

UNITED STATES PATENT AND TRADEMARK OFFICE

Commissioner for Patents
United States Patent and Trademark Office
P.O. Box 1450
Alexandria, VA 22313-1450
www.uspto.gov

Paper No.

COPY MAILED

FEB 06 2008

OFFICE OF PETITIONS

CLARK & ELBING LLP
101 FEDERAL STREET
BOSTON MA 02110

Patent No. 7,244,701	:	DECISION ON APPLICATION
Issue Date: July 17, 2007	:	FOR
Application No. 09/882,291	:	PATENT TERM ADJUSTMENT
Filed: June 15, 2001	:	and
Atty Docket No. 50412/012003	:	NOTICE OF INTENT TO
	:	CERTIFICATE OF CORRECTION

This is a decision on the "REQUEST FOR CORRECTION OF PATENT TERM ADJUSTMENT" filed September 17, 2007, which is properly treated as an application for patent term adjustment under 37 CFR 1.705(b). Patentee requests that a Certificate of Correction be issued to correct the patent term adjustment indicated on the above-identified patent.

The application for patent term adjustment is **GRANTED to the extent indicated herein.**

Patentee is given **TWO (2) MONTHS** from the mail date of this decision to respond. No extensions of time will be granted under § 1.136.

The patent term adjustment indicated on the patent is to be corrected by issuance of a certificate of correction showing a revised Patent Term Adjustment of **twenty-four (24)** days.

Preliminarily, patentee is reminded that 35 U.S.C. 154(b) provides for patent term adjustment for examination delay. Pursuant to 35 U.S.C. 154(b)(3)(B) and implementing regulation 37 C.F.R. § 1.705, an applicant shall receive an initial determination of patent term adjustment with the mailing of the Notice of Allowance and shall be given one opportunity to request reconsideration of that determination by way of filing of an application for patent term adjustment (and fee for application for patent term adjustment) prior to the payment of

the issue fee. Thus, any application for patent term adjustment disputing the initial determination of patent term adjustment at the time of the mailing of the Notice of Allowance filed after payment of the issue fee may be dismissed as untimely filed.

However, in this instance, on March 8, 2005, the Office mailed the initial determination of Patent Term Adjustment under 35 U.S.C. 154(b) in the above-identified application. The Notice stated that the patent term adjustment (PTA) to date is 0 days. On April 8, 2005, patentee paid the issue fee. Subsequent to payment of the issue fee, on October 14, 2005, patentee filed a grantable petition to withdraw from issue and request for continued examination (RCE). Prosecution was reopened and on November 3, 2005, the Office mailed another initial determination of Patent Term Adjustment under 35 U.S.C. 154(b) in the above-identified application. The Notice again stated that the patent term adjustment (PTA) to date is 0 days. On February 6, 2006, patentee resubmitted the issue fee. At the time of the mailing of each Notice of Allowance, there was no dispute as to the accuracy of this determination because as of the mailing of the notice of allowance, the undisputed periods of reduction for applicant delay exceeded the period of adjustment for Office delay. As the Office does not set forth negative balances of patent term adjustment, the initial determinations of patent term adjustment of 0 days were properly not disputed.

However, upon issuance of the patent, periods of adjustment of 406 days pursuant to 37 CFR 1.702(a)(4) and 24 days pursuant to 37 CFR 1.702(b) were entered for Office delay in issuance of the patent after payment of the issue fee and satisfaction of all outstanding requirements and for the Office taking in excess of three years to issue the patent respectively. In view thereof, the entry of the periods of reduction for applicant delay before the mailing of the notice of allowance became an issue. Under the circumstances the application for patent term adjustment will not be dismissed as untimely filed, but will be considered on the merits.

With respect to the merits, patentee disputes the reduction of 93 days attributed to them for failing to respond within three months to the Notice to File Missing Parts of Application mailed August 10, 2001. Patentee states that they filed a response on December 31, 2001. As such, patentee maintains that the period of reduction pursuant to 37 CFR 1.704(b) for this "failure to

engage" should be 51 days (for the period from November 11, 2001 to December 31, 2001). Further, patentee asserts that the period of reduction pursuant to 37 CFR 1.704(c)(8) for filing a supplemental reply on May 11, 2004 after filing an initial reply on February 17, 2004, is 83 days, not 84 days.

The reduction of 93 days has been found to be incorrect. Patentee is correct that a complete and proper response was filed on December 31, 2001. This response was filed outside the three-month period under 37 CFR 1.704(b), but only by 51 days. Accordingly, applicant delay should have been assessed as 51 days, not 93 days.

However, the reduction of 84 days is correct. The period under § 1.704(c)(8) is counted beginning on the day after the date the initial reply was filed and ending on the date that the supplemental reply or other such paper was filed. When a period is indicated (in 37 CFR 1.703 or 1.704) as "beginning" on a particular day, that day is included in the period, in that such day is "day one" of the period and not "day zero." For example, a period beginning on April 1 and ending on April 10 is ten (and not nine) days in length. See MPEP 2731. In this instance, the computer properly calculated the period as 84 days, counting the number of days beginning on February 18, 2004, the day after the initial reply was filed, and ending on May 11, 2004, the date the supplemental paper was filed.

Furthermore, a review of the application history reveals further bases for correction. A first Notice of Allowance was mailed on March 8, 2005. Patentee filed a Request for Continued Examination (RCE) and IDS (and petition to withdraw from issue) on October 14, 2005. Prior to filing the RCE, patentee paid the Issue Fee. The filing of the payment of the issue fee set the calculation of the period of reduction pursuant to 37 CFR 1.704(b), if any, for applicant delay. The filing of the RCE and IDS after the mailing of the Notice of Allowance constituted a failure to engage pursuant to 37 CFR 1.704(c)(10). The calculation of 128 days pursuant to 37 CFR 1.704(b) is incorrect and is being removed. A period of 21 days, counting the number of days in the period beginning on October 14, 2005, the date of filing of the RCE and IDS and ending on November 3, 2005, the date of mailing of the new Notice of Allowance in response is being entered.

Moreover, an additional period of reduction should be entered for patentee's failure to engage pursuant to 37 CFR 1.704(c)(10). A second Notice of Allowance was mailed on November 3, 2005. Thereafter, on January 13, 2006, patentee filed a petition to accept an unintentionally delayed claim for priority. Then on August 28, 2006, patentee filed a supplement to the petition with an application data sheet. The filing of the petition and accompanying papers after the mailing of the Notice of Allowance constituted a failure to engage pursuant to 37 CFR 1.704(c)(10). This period is 117 days, counting the lesser number of days (and considering overlap for deiay in payment of the Issue Fee and overlap with the amendment filed June 9, 2006) in the period beginning on January 13, 2006, the date of filing of the RCE and IDS and ending on July 10, 2007, the date of mailing of the final response to these items.

Finally, the review of the record revealed that the period of adjustment of 24 days entered pursuant to 37 CFR 1.702(b) is incorrect. The instant patent issued 3 years and 1127 days after its filing date. Pursuant to 35 U.S.C. 154(B)(i), § 1.703(b)(1) provides, in pertinent part that:

> the period of adjustment under § 1.702(b) is the number of days, if any, in the period beginning on the day after the date that is three years after the date on which the application was filed under 35 U.S.C. 111(a) … and ending on the date a patent was issued, but not including the sum of the following periods:
>
> (1) The number of days, if any, in the period beginning on the date on which a request for continued examination of the application under 35 U.S.C. 132(b) was filed and ending on the date the patent was issued;

Thus, the filing of a request for continued examination (RCE) cuts-off the applicant's ability to accumulate any additional patent term adjustment against the three-year pendency provision, but does not otherwise affect patent term adjustment.

In this instance, a RCE was filed on December 7, 2004. Thus, the ability to accumulate additional patent term adjustment against the three-year pendency provision ended December 4, 2004. Accordingly, the period of adjustment under § 1.702(b) is 175 days.

However, any days of delay for Office issuance of the patent more than 3 years after the filing date of the application, which overlap, with the days of patent term adjustment accorded prior to the issuance of the patent will not result in any additional patent term adjustment. Further, in considering the overlap, the entire period during which the application was pending (except for periods excluded under 35 U.S.C. 154(b)(1)(B)(i)-(iii), and not just the period beginning three years after the actual filing date of the application, is the period of delay under 35 U.S.C. 154(b)(1)(B) in determining whether periods of delay overlap under 35 U.S.C. 154(b)(2)(A). See 35 U.S.C. 154(b) (1)(B); 35 U.S.C. 154(b)(2)(A); and 37 CFR 1.703(f). In this instance, the period of delay of 175 days attributable to the delay in the issuance of the patent overlaps with the adjustments of 110, 41, and 406 days attributable to grounds specified in § 1.702(a)(1), (2) and (a)(4). Thus, no additional period of adjustment should have been entered. The period of adjustment of 24 days is being removed.

In view thereof, the patent should have issued with a revised patent term adjustment of twenty-four (24) days (41 + 110 + 406 days of Office delay reduced by 51 + 97 + 84 + 40 + 21 + 117 + 120 + 3 days of applicant delay).

The Office acknowledges submission of the $200.00 fee set forth in 37 CFR 1.18(e). No additional fees are required.

The application file is being forwarded to the Certificates of Correction Branch for issuance of a certificate of correction in order to rectify this error. The Office will issue a certificate of correction indicating that the term of the above-identified patent is extended or adjusted by TWENTY-FOUR (24) days.

Telephone inquiries specific to this matter should be directed to the undersigned at (571) 272-3219.

Nancy Johnson
Senior Petitions Attorney
Office of Petitions

Enclosures: Copy of REVISED PALM Screen
Copy of DRAFT Certificate of Correction

Day : Wednesday

PALM INTRANET

Date: 1/30/2008
Time: 11:38:30

PTA Calculations for Application: 09/882291			
Application Filing Date:	06/15/2001	PTO Delay (PTO):	581
Issue Date of Patent:	07/17/2007	Three Years:	0
Pre-Issue Petitions:	0	Applicant Delay (APPL):	565
Post-Issue Petitions:	0	Total PTA (days):	24
PTO Delay Adjustment:	8		

File Contents History

Number	Date	Contents Description	PTO	APPL	START
121	01/30/2008	ADJUSTMENT OF PTA CALCULATION BY PTO		24	
120	01/30/2008	ADJUSTMENT OF PTA CALCULATION BY PTO		117	
119	01/30/2008	ADJUSTMENT OF PTA CALCULATION BY PTO		21	
118	01/30/2008	ADJUSTMENT OF PTA CALCULATION BY PTO	128		
117	01/30/2008	ADJUSTMENT OF PTA CALCULATION BY PTO		51	
116	01/30/2008	ADJUSTMENT OF PTA CALCULATION BY PTO	93		
107.5	06/27/2007	PTA 36 MONTHS	24		
107	07/17/2007	PATENT ISSUE DATE USED IN PTA CALCULATION	406		103
106	06/19/2007	RECEIPT INTO PUBS			
105	06/14/2007	DISPATCH TO FDC			
104	06/14/2007	APPLICATION IS CONSIDERED READY FOR ISSUE			
103	02/06/2006	ISSUE FEE PAYMENT VERIFIED		3	85
102	06/13/2007	RESPONSE TO AMENDMENT UNDER RULE 312			
101	06/06/2007	MAIL RESPONSE TO 312 AMENDMENT (PTO-271)			
100	06/04/2007	MAIL-PETITION DECISION - GRANTED			
99	09/06/2006	RECEIPT INTO PUBS			
98	09/01/2006	RECEIPT INTO PUBS			
97	06/09/2006	AMENDMENT AFTER NOTICE OF ALLOWANCE (RULE 312)		120	101
96	06/23/2006	RESPONSE TO AMENDMENT UNDER RULE 312			
95	02/06/2006	ISSUE FEE PAYMENT RECEIVED			
93	01/13/2006	UNTIMELY (LATE) AMENDMENT FILED			
90	05/01/2006	RECEIPT INTO PUBS			
89	01/13/2006	PETITION ENTERED			

88	12/07/2005	SEQUENCE FORWARDED TO PUBS ON TAPE			
87	11/28/2005	SEQUENCE FORWARDED TO PUBS ON TAPE			
86	11/14/2005	EXPORT TO INITIAL DATA CAPTURE			
85	11/03/2005	MAIL NOTICE OF ALLOWANCE			
84	10/31/2005	ISSUE REVISION COMPLETED			
83	11/01/2005	NOTICE OF ALLOWANCE DATA VERIFICATION COMPLETED			
82	10/31/2005	NOTICE OF ALLOWABILITY			
81	10/19/2005	INFORMATION DISCLOSURE STATEMENT CONSIDERED			
80	10/19/2005	REFERENCE CAPTURE ON IDS			
79	10/19/2005	INFORMATION DISCLOSURE STATEMENT (IDS) FILED			
78	10/27/2005	DATE FORWARDED TO EXAMINER			
77	10/14/2005	REQUEST FOR CONTINUED EXAMINATION (RCE)		128	62
76	10/27/2005	DISPOSAL FOR A RCE/CPA/129 (EXPRESS ABANDONMENT IF CPA)			
75	10/14/2005	RULE 47 / 48 CORRECTION OF INVENTORSHIP PAPERS FILED			
73	10/18/2005	MAIL-RECORD PETITION DECISION OF GRANTED TO WITHDRAW FROM ISSUE			
72	10/14/2005	WORKFLOW - REQUEST FOR RCE - BEGIN			
71	10/17/2005	CORRESPONDENCE ADDRESS CHANGE			
70	10/17/2005	CHANGE IN POWER OF ATTORNEY (MAY INCLUDE ASSOCIATE POA)			
69	10/14/2005	PETITION ENTERED			
68	04/14/2005	SEQUENCE FORWARDED TO PUBS ON TAPE			
67	02/24/2005	AFFIDAVIT(S) (RULE 131 OR 132) OR EXHIBIT(S) RECEIVED			
66	02/24/2005	AMENDMENT AFTER NOTICE OF ALLOWANCE (RULE 312)			
65	04/08/2005	ISSUE FEE PAYMENT RECEIVED			
64	03/15/2005	EXPORT TO INITIAL DATA CAPTURE			
63	04/06/2005	WORKFLOW - FILE SENT TO CONTRACTOR			
62	03/08/2005	MAIL NOTICE OF ALLOWANCE			
61	03/07/2005	ISSUE REVISION COMPLETED			
60	03/07/2005	NOTICE OF ALLOWANCE DATA VERIFICATION COMPLETED			
59	03/07/2005	CASE DOCKETED TO EXAMINER IN GAU			

58	03/07/2005	NOTICE OF ALLOWABILITY			
57	02/08/2005	MAIL EXAMINER INTERVIEW SUMMARY (PTOL - 413)			
56	02/03/2005	EXAMINER INTERVIEW SUMMARY RECORD (PTOL - 413)			
55	12/07/2004	AFFIDAVIT(S) (RULE 131 OR 132) OR EXHIBIT(S) RECEIVED			
54	01/12/2005	DATE FORWARDED TO EXAMINER			
53	12/07/2004	AMENDMENT SUBMITTED/ENTERED WITH FILING OF CPA/RCE			
52	12/07/2004	INFORMATION DISCLOSURE STATEMENT (IDS) FILED			
51	01/12/2005	DATE FORWARDED TO EXAMINER			
50	12/07/2004	REQUEST FOR CONTINUED EXAMINATION (RCE)		40	45
49	01/12/2005	DISPOSAL FOR A RCE/CPA/129 (EXPRESS ABANDONMENT IF CPA)			
48	12/07/2004	REQUEST FOR EXTENSION OF TIME - GRANTED			
47	12/07/2004	WORKFLOW INCOMING AMENDMENT IFW			
46	12/07/2004	WORKFLOW - REQUEST FOR RCE - BEGIN			
45	07/28/2004	MAIL FINAL REJECTION (PTOL - 326)	41		31
44	07/26/2004	FINAL REJECTION			
43	05/11/2004	INFORMATION DISCLOSURE STATEMENT (IDS) FILED		84	31
42	05/14/2004	DATE FORWARDED TO EXAMINER			
41	05/11/2004	SUPPLEMENTAL RESPONSE			
40	05/12/2004	WORKFLOW INCOMING AMENDMENT IFW			
39	05/11/2004	WORKFLOW INCOMING AMENDMENT IFW			
38	05/11/2004	WORKFLOW INCOMING AMENDMENT IFW			
37	04/20/2004	CORRESPONDENCE ADDRESS CHANGE			
36	04/15/2004	MAIL EXAMINER INTERVIEW SUMMARY (PTOL - 413)			
35	04/14/2004	EXAMINER INTERVIEW SUMMARY RECORD (PTOL - 413)			
34	03/03/2004	CORRESPONDENCE ADDRESS CHANGE			
33	02/17/2004	AFFIDAVIT(S) (RULE 131 OR 132) OR EXHIBIT(S) RECEIVED			
32	03/03/2004	DATE FORWARDED TO EXAMINER			
31	02/17/2004	RESPONSE AFTER NON-FINAL ACTION		97	29

30	02/17/2004	REQUEST FOR EXTENSION OF TIME - GRANTED			
29	08/12/2003	MAIL NON-FINAL REJECTION			
28	08/11/2003	NON-FINAL REJECTION			
27	06/09/2003	NEW OR ADDITIONAL DRAWING FILED			
26	06/11/2003	DATE FORWARDED TO EXAMINER			
25	06/09/2003	RESPONSE AFTER NON-FINAL ACTION			
24	03/11/2003	MAIL NON-FINAL REJECTION			
23	03/10/2003	NON-FINAL REJECTION			
22	01/13/2003	REQUEST FOR FOREIGN PRIORITY (PRIORITY PAPERS MAY BE INCLUDED)			
21	01/03/2003	DATE FORWARDED TO EXAMINER			
20	12/18/2002	RESPONSE TO ELECTION / RESTRICTION FILED			
19	12/03/2002	MAIL RESTRICTION REQUIREMENT	110		-1
18	12/02/2002	REQUIREMENT FOR RESTRICTION / ELECTION			
17	08/12/2002	INFORMATION DISCLOSURE STATEMENT (IDS) FILED			
16	02/11/2002	SUBSTITUTE SPECIFICATION FILED			
15	12/31/2001	PRELIMINARY AMENDMENT			
14	10/21/2002	CASE DOCKETED TO EXAMINER IN GAU			
13	06/27/2002	APPLICATION DISPATCHED FROM OIPE			
12	06/26/2002	APPLICATION IS NOW COMPLETE			
11	11/13/2001	SMALL ENTITY STATEMENT (37 CFR 1.27)			
10	11/13/2001	A STATEMENT BY ONE OR MORE INVENTORS SATISFYING THE REQUIREMENT UNDER 35 USC 115, OATH OF THE APPLIC			
9	02/11/2002	PAYMENT OF ADDITIONAL FILING FEE/PREEXAM		93	4
8	02/11/2002	A SET OF SYMBOLS AND PROCEDURES, PROVIDED TO THE PTO ON A SET OF COMPUTER LISTINGS, THAT DESCRIBE IN			
7	02/11/2002	A SET OF SYMBOLS AND PROCEDURES, PROVIDED TO THE PTO ON A SET OF 3 ? INCH DISKETTES IN COMPUTER READ			
5	03/08/2002	CRF IS GOOD TECHNICALLY / ENTERED INTO DATABASE			
4	08/10/2001	NOTICE MAILED--APPLICATION INCOMPLETE--FILING DATE ASSIGNED			
3	08/10/2001	CORRESPONDENCE ADDRESS CHANGE			
2	06/25/2001	IFW SCAN & PACR AUTO SECURITY REVIEW			

1	06/15/2001	INITIAL EXAM TEAM NN

Search Another: Application# Search

EXPLANATION OF PTA CALCULATION

EXPLANATION OF PTE CALCULATION

To go back, right click here and select Back. To go forward, right click here and select Forward. To refresh, right click here and select Refresh.

Back to OASIS | Home page

UNITED STATES PATENT AND TRADEMARK OFFICE

CERTIFICATE OF CORRECTION

PATENT : 7,244,701 B2

DATED : **July 17, 2007**

INVENTOR(S) : Larsen et al.

DRAFT

It is certified that error appears in the above-identified patent and that said Letters Patent is hereby corrected as shown below:

On the cover page,

[*] Notice: Subject to any disclaimer, the term of this patent is extended or adjusted under 35 USC 154(b) by 16 days

Delete the phrase "by 16 days" and insert – by 24 days--

UNITED STATES PATENT AND TRADEMARK OFFICE

Commissioner for Patents
United States Patent and Trademark Office
P.O. Box 1450
Alexandria, VA 22313-1450
www.uspto.gov

RINES & RINES
81 N. STATE STREET
CONCORD NH 03301

COPY MAILED

SEP 28 2005

OFFICE OF PETITIONS

In re Application of	:	
Roberts, Jerry B.	:	
Application No. 09/882,338	:	ON PETITION
Filed: September 5, 2001	:	
Attorney Docket No. 57399US004	:	

This is a decision on the petition under 37 C.F.R. § 1.137(b), filed May 23, 2005, to revive the above-identified application.

The petition is **DISMISSED**.

Any request for reconsideration must be submitted within TWO (2) MONTHS from the mail date of this decision. No further petition fee is required for the request. Extensions of time under 37 CFR 1.136(a) are permitted. The reconsideration request should include a cover letter entitled "Renewed Petition under 37 CFR 1.137(b)." This is **not** a final agency action within the meaning of 5 U.S.C. § 704.

The above-identified application became abandoned for failure to submit the issue fee and publication fee in a timely manner in reply to the Notice of Allowance mailed February 14, 2005, which set a statutory period for reply of three (3) months. Accordingly, the above-identified application became abandoned on May 17, 2005. A Notice of Abandonment was mailed on July 26, 2005.

A grantable petition under 37 CFR 1.137(b) must be accompanied by:
(1) the required reply,[1]
(2) the petition fee,
(3) a statement that the entire delay in filing the required reply from the due date for the reply until the filing of a grantable petition pursuant to 37 CFR 1.137(b) was unintentional, and
(4) a terminal disclaimer and fee if the application was filed on or before June 8, 1995 or if the application is a design application.

Where there is a question as to whether either the abandonment or the delay in filing a petition under 37 CFR 1.137 was unintentional, the Commissioner may require additional information.[2]

The instant petition lacks item (1). Petitioner stated that an RCE, a copy of the August 9, 2005 Amendment, and an IDS Transmittal w/ 1449 were included with the instant petition. However, the Office has not yet received the above items. Petitioner should resubmit any documents that constitute the response to the Office action previously mailed on February 14, 2005.

---

[1] In a nonprovisional application abandoned for failure to prosecute, the required reply may be met by the filing of a continuing application. In an application or patent, abandoned or lapsed for failure to pay the issue fee or any portion thereof, the required reply must be the payment of the issue fee or any outstanding balance thereof.

[2] See MPEP 711.03(c)(III)(C) and (D).

Further, 35 U.S.C. 41(a)(7) and 151 each require payment of the issue fee and publication fee as a condition of reviving an application abandoned lapsed for failure to pay the issue fee and publication fee. Therefore, the filing of a continuing application without payment of the issue fee, publication fee or any outstanding balance thereof is not an acceptable reply in an application abandoned or patent lapsed for failure to pay the issue fee, publication fee or any portion thereof. Accordingly, $1700.00 will be charged to petitioner's deposit account for the issue fee and publication fee as authorized.

There is no indication that the person signing the instant petition was ever given a power of attorney or authorization of agent to prosecute the above-identified application. If the person signing the instant petition desires to receive future correspondence regarding this application, the appropriate power of attorney or authorization of agent must be submitted. While a courtesy copy of this decision is being mailed to the person signing the instant petition, all future correspondence will be directed solely to the address currently of record until such time as appropriate instructions are received to the contrary.

It is not apparent whether the statement of unintentional delay was signed by a person who would have been in a position of knowing that the entire delay in filing the required reply from the due date for the reply until the filing of a grantable petition pursuant to 37 CFR 1.137(b) was unintentional. Nevertheless, in accordance with 37 CFR 10.18, the statement is accepted as constituting a certification of unintentional delay. However, in the event that petitioner has no knowledge that the delay was unintentional, petitioner must make such an inquiry to ascertain that, in fact, the delay was unintentional. If petitioner discovers that the delay was intentional, petitioner must notify the Office.

Further correspondence with respect to this matter should be addressed as follows:

By mail: Mail Stop PETITIONS
Commissioner for Patents
Post Office Box 1450
Alexandria, VA 22313-1450

By hand: Customer Window located at:

U.S. Patent and Trademark Office
Customer Service Window Randolph Building
401 Dulany Street
Alexandria, VA 22314

By fax: (571) 273-8300
ATTN: Office of Petitions

Any questions concerning this matter may be directed to the undersigned at (571) 272-3206.

Liana Chase
Petitions Examiner
Office of Petitions

Cc: 3M INNOVATIVE PROPERTIES COMPANY
P.O. BOX 33427
ST. PAUL, MN 55133-3427

UNITED STATES PATENT AND TRADEMARK OFFICE

Commissioner for Patents
United States Patent and Trademark Office
P.O. Box 1450
Alexandria, VA 22313-1450
www.uspto.gov

3M INNOVATIVE PROPERTIES COMPANY
PO BOX 33427
ST. PAUL MN 55133-3427

COPY MAILED

OCT 2 6 2005

OFFICE OF PETITIONS

In re Application of	:	
Roberts, Jerry B.	:	
Application No. 09/882,338	:	ON PETITION
Filed: September 5, 2001	:	
Attorney Docket No. 57399US004	:	

This is a decision on the renewed petition under 37 C.F.R. § 1.137(b), filed October 20, 2005, to revive the above-identified application.

The petition is **GRANTED.**

The petition satisfies the conditions for revival pursuant to the provisions of 37 CFR 1.137(b) in that (1) the reply in the form of an RCE (and requisite fee) and an Amendment; (2) the petition fee; and (3) the required statement of unintentional delay have been received. Accordingly, the response has been accepted as having been unintentionally delayed.

This matter is being referred to Technology Center 2600 for processing of the Request for Continued Examination under 37 CFR 1.114 filed with the instant petition.

Telephone inquiries regarding this decision should be directed to the undersigned at (571) 272-3282.

Liana Chase
Petitions Examiner
Office of Petitions

UNITED STATES PATENT AND TRADEMARK OFFICE

COMMISSIONER FOR PATENTS
UNITED STATES PATENT AND TRADEMARK OFFICE
P.O. BOX 1450
ALEXANDRIA, VA 22313-1450
www.uspto.gov

Paper No. 9

WARD & OLIVO
708 Third Ave
New York NY 10017

COPY MAILED

DEC 0 1 2003

OFFICE OF PETITIONS

In re Application of
Park
Application No. 09/882,361
Filed: June 15, 2001
Attorney Docket No. 140 - 030
For: MEANS AND METHOD FOR GUIDING IONS IN A MASS SPECTROMETER

ON PETITION

This is a decision on the petition, filed November 17, 2003, to revive the above-identified application. The petition is not accompanied by a petition fee; thus, the petition can only be treated as a feeless petition under 37 CFR 1.181 to withdraw the holding of abandonment.

The petition under 37 CFR 1.181 is **DISMISSED**.

Any further petition to revive the above-identified application must be submitted within TWO (2) MONTHS from the mail date of this decision. Extensions of time under 37 CFR 1.136(a) are permitted. This is **not** final agency action within the meaning of 5 U.S.C. § 704.

The application was filed on June 15, 2001. On August 17, 2001, the Office mailed petitioner a Notice to File Missing Parts of Nonprovisional Application, which required petitioner to submit the basic filing fee, additional claim fees, an executed oath/declaration, a surcharge for filing a late oath/declaration and filing fees, and substitute drawings in compliance with 37 CFR 1.84. Petitioner was given an extendable two month period of time to reply.

The Office contended that this application became abandoned on October 18, 2001 because no reply to the August 17, 2001 Notice was received. The Office of Initial Patent Examination mailed petitioner a Notice of Abandonment on November 10, 2003.

Petitioner promptly filed the instant petition on November 17, 2003. Petitioner argues that a reply was timely filed on certificate of mailing date October 17, 2001. The copy of the transmittal letter submitted with the instant petition lists a power of attorney, a declaration, an assignment, an IDS, and a check for $1,396 as being mailed on October 17, 2001. A properly completed certificate of mailing listing October 17, 2001 as the date of deposit in first class mail with the USPS is affixed to the transmittal letter. In addition, petitioner has provided a copy of his itemized postcard receipt showing an Office of Initial Patent Examination date stamp citing March 5, 2002 as the date of receipt. The return postcard constitutes *prima facie* evidence that the items listed on the postcard were received on March 5, 2002. MPEP 503.

A review of the application file reveals that the items listed on the transmittal letter and the postcard receipt are present.

Thus, petitioner's October 17, 2001 reply was timely filed.

HOWEVER, the above-identified application became abandoned for failure to **properly** respond to the August 17, 2001 Notice. The reply did not satisfy the requirements set in the August 17, 2001 Notice. Petitioner did not submit substitute drawings in compliance with 37 CFR 1.84. This is the cause of abandonment. Petitioner has provided no evidence to show that substitute drawings in compliance with 37 CFR 1.84 were timely filed.

Petitioner is urged to file a petition to revive under the unavoidable standard of 37 CFR 1.137(a) or the unintentional standard of 37 CFR 1.137(b) promptly. The required reply must be substitute drawings in compliance with 37 CFR 1.84.

Further correspondence with respect to this matter should be addressed as follows:

By mail:	Mail Stop PETITION Commissioner for Patents Post Office Box 1450 Alexandria, VA 22313-1450
By hand:	Crystal Plaza 1 Lobby 2011 South Clark Place Room 1B03 Arlington, VA 22202
By FAX:	(703) 872-9306 ATTN: Office of Petitions

Telephone inquiries pertaining to these matters may be addressed to the undersigned at (703) 308-6712.

E. Shirene Willis

E. Shirene Willis
Senior Petitions Attorney
Office of Petitions

UNITED STATES PATENT AND TRADEMARK OFFICE

COMMISSIONER FOR PATENTS
UNITED STATES PATENT AND TRADEMARK OFFICE
P.O. BOX 1450
ALEXANDRIA, VA 22313-1450
www.uspto.gov

Paper No. 12

COPY MAILED
JAN 15 2004
OFFICE OF PETITIONS

David M. Hill
708 Third Avenue
New York, NY 10017

In re Application of
Melvin A. Park
Application No. 09/882,361
Filed: June 15, 2001
Attorney Docket No. 140-030

ON PETITION

This is a decision on the petition under 37 CFR 1.137(b), filed December 15, 2003, to revive the above-identified application.

The above-identified application became abandoned for failure to reply in a timely manner to the Notice to File Missing Parts of Application (Notice) mailed August 17, 2001. The Notice set a period for reply of two (2) months from the mail date of the Notice. No extensions of time under the provisions of 37 CFR 1.136(a) were obtained. Accordingly, the above-identified application became abandoned after midnight October 17, 2001.

In response to the Notice to File Missing Parts, petitioner submitted with the instant petition $1,330 for the petition to revive fee, and eight (8) sheets of substitute drawings in compliance with 37 CFR 1.84.

Since the requirements for a grantable petition have been met, the petition is **GRANTED**.

The application file is being forwarded to the Office of Initial Patent Examination Unit for further processing.

Telephone inquiries concerning this decision should be directed to Andrea Smith at (703) 308-6711.

Andrea Smith
Petitions Examiner
Office of Petitions
Office of the Deputy Commissioner
for Patent Examination Policy

UNITED STATES PATENT AND TRADEMARK OFFICE

COMMISSIONER FOR PATENTS
UNITED STATES PATENT AND TRADEMARK OFFICE
WASHINGTON, D.C. 20231
www.uspto.gov

Paper No. 6

CHRISTENSEN, O'CONNOR, JOHNSON,
KINDNESS, PLLC
1420 FIFTH AVENUE, SUITE 2800
SEATTLE, WA 98101

COPY MAILED
DEC 05 2001
OFFICE OF PETITIONS

In re Application of	:	
Amir Aliabadi et al.	:	
Application No. 09/882,368	:	ON PETITION
Filed: June 15, 2001	:	
Attorney Docket No. INFS-1-17535	:	

This is in response to the petition under 37 CFR 1.47(a), filed October 1, 2001.

The petition is dismissed.

Rule 47 applicant is given TWO MONTHS from the mailing date of this decision to reply, correcting the below-noted deficiencies. Any reply should be entitled "Request for Reconsideration of Petition Under 37 CFR 1.47(a)," and should only address the deficiencies noted below, except that the reply may include an oath or declaration executed by the non-signing inventor. **FAILURE TO RESPOND WILL RESULT IN ABANDONMENT OF THE APPLICATION.** Any extensions of time will be governed by 37 CFR 1.136(a).

A grantable petition under 37 CFR 1.47(a) requires: (1) proof that the non-signing inventor cannot be reached or refuses to sign the oath or declaration after having been presented with the application papers (specification, claims and drawings); (2) an acceptable oath or declaration in compliance with 35 U.S.C. §§ 115 and 116; (3) the petition fee; and (4) a statement of the last known address of the non-signing inventor. Applicant lacks items (1) set forth above.

As to item (1), petitioner has not provided sufficient evidence that a copy of the application papers was sent or given to the non-signing inventor. Petitioner must show proof that a copy of the application (specification, claims and drawings) was sent or given to the non-signing inventor for review. Rule 47 applicant has failed to show or provide proof that the nonsigning inventor has refused to sign the declaration, after having been presented with a copy of the application papers. Did inventor Kelvin Moeller receive the application papers? See Manual of Patent

Examining Procedure, Section 409.03(d). While the petition indicates that the declaration and assignment forms were mailed to inventor Moeller, no evidence has been presented to show that a copy of the complete application papers was in fact presented to Mr. Moeller. Before a refusal can be alleged, it must be demonstrated that a copy of the application papers was presented to the nonsigning inventor. If joint inventor Moeller was not presented with a copy of the application papers, then Mr. Moeller could not attest that he has "reviewed and understands the application papers" and could not execute that declaration he was requested to sign. Therefore, unless petitioner can show that a copy of the application papers was presented to inventor Moeller, then petitioner will have to mail a copy of the complete application papers (specification, claims and drawings) to inventor Moeller's last known address, return receipt requested. A cover letter of instructions should accompany the mailing of the application papers setting a deadline or a statement that no response will constitute a refusal. This sort of ultimatum lends support to a finding of refusal by conduct. The proof of the pertinent events should be made by a statement of someone with firsthand knowledge of the events and should include documentary evidence, such as certified mail return receipt, cover letter of instructions, telegram, etc. See MPEP 409.03(d).

The statements of facts must be signed, where at all possible, by a person having firsthand knowledge of the facts recited therein. If the inventor orally refuses to join in the application, that fact along with the time and place of the refusal must be stated in the affidavit or declaration. If, on the other hand, petitioner receives an express written refusal, a copy of the document evidencing that refusal must be made part of the affidavit or declaration.

When it is concluded by the rule 47 petitioner that an omitted inventor's conduct constitutes a refusal, all facts upon which that conclusion is based should be stated in an affidavit or declaration. If there is documentary evidence to support facts alleged in the affidavit or declaration, such evidence must be submitted.

Whenever an omitted inventor gives a reason for refusing to sign the application oath or declaration, that reason should be stated in the affidavit or declaration.

In order to expedite consideration of the petition under 37 CFR 1.47(a), petitioner may wish to submit the renewed petition by facsimile transmission to the telephone number indicated below and to the attention of Irvin Dingle.

Further correspondence with respect to this matter should be addressed as follows:

By mail: U.S. Patent and Trademark Office
Box DAC
P.O. Box 2327
Arlington, VA 22202

By FAX: (703) 308-6916
Attn: Office of Petitions

By hand: Crystal Plaza Four, Suite 3C23
2201 S. Clark Place
Arlington, VA

Telephone inquiries related to this decision should be directed to Irvin Dingle at (703) 306-5684.

Frances Hicks

Frances Hicks
Lead Petitions Examiner
Office of Petitions
Office of the Deputy Commissioner
for Patent Examination Policy

#9

UNITED STATES PATENT AND TRADEMARK OFFICE

COMMISSIONER FOR PATENTS
UNITED STATES PATENT AND TRADEMARK OFFICE
WASHINGTON, D.C. 20231
www.uspto.gov

Paper No. 9

CHRISTENSEN, O'CONNOR, JOHNSON,
KINDNESS, PLLC
1420 FIFTH AVENUE, SUITE 2800
SEATTLE, WA 98101

COPY MAILED

JAN 18 2002

OFFICE OF PETITIONS

In re Application of	:
Amir Aliabadi et al.	:
Application No. 09/882,368	:
Filed: June 15, 2001	: DECISION NOTING JOINDER OF
For: UNIFIED PRODUCT PURCHASING	: INVENTOR AND PETITION UNDER
SYSTEM AND METHOD	: 37 CFR 1.47(a) MOOT

Papers filed on January 11, 2002 in response to a "Decision Refusing Status Under 37 CFR 1.47(a)," mailed December 5, 2001, included a Declaration signed by previously nonsigning inventor Kelvin Moeller in compliance with 37 CFR 1.63.

In view of the joinder of the inventor, further consideration under 37 CFR 1.47(a) is moot; this application does not have any rule 1.47(a) status and no such status should appear on the file wrapper. This application need not be returned to this office for any further consideration under 37 CFR 1.47(a).

This application is being forwarded to the Initial Patent Examination Unit.

Inquiries related to this decision may be addressed to Irvin Dingle at (703) 306-5684.

Frances Hicks

Frances Hicks
Lead Petitions Examiner
Office of Petitions
Office of the Deputy Commissioner
for Patent Examination Policy

UNITED STATES PATENT AND TRADEMARK OFFICE

Commissioner for Patents
United States Patent and Trademark Office
P.O. Box 1450
Alexandria, VA 22313-1450
www.uspto.gov

COPY MAILED

JUN 11 2007

OFFICE OF PETITIONS

SEYFARTH SHAW LLP
131 S. DEARBORN ST.,
SUITE2400
CHICAGO, IL 60603-5803

In re Application of

Kobayashi, et al.

Application No. 09/882,409

Filed: June 15, 2001

Attorney Docket No. 37569-408700

DECISION ON PETITION

This is a decision on the petition under 37 CFR 1.137(b), filed May 8, 2007, to revive the above-identified application.

The petition is **GRANTED**.

A final Office action was mailed in the above-cited application October 7, 2005, which set a shortened statutory period for reply of three (3) months from its mailing date. No response was filed within the allowable period. The application became abandoned on January 8, 2007. A Notice of Abandonment was mailed May 3, 2006.

The Request for Continued Examination, filed May 8, 2007, is noted and made of record.

The application is being forwarded to Technology Center 1700, GAU 1756 for further processing.

Telephone inquiries concerning this decision should be directed to the undersigned at (571) 272-3222.

Kenya A. McLaughlin
Petitions Attorney
Office of Petitions

UNITED STATES PATENT AND TRADEMARK OFFICE

COMMISSIONER FOR PATENTS
UNITED STATES PATENT AND TRADEMARK OFFICE
P.O. BOX 1450
ALEXANDRIA, VA 22313-1450
www.uspto.gov

MAILED

DEC 0 5 2003

Technology Center 2100

Paper No. 9

Chernoff, Vilhauer, McClung & Stenzel, LLP
1600 ODS Tower
601 SW Second Avenue
Portland, OR 97204

In re Application of: van Beek et al.	)	
Application No. 09/882,416	)	**DECISION ON PETITION TO**
Attorney Docket No. KLR: 7146.100	)	**WITHDRAW HOLDING OF**
Filed: June 15, 2001	)	**ABANDONMENT UNDER 37 CFR**
For: METADATA IN JPEG2000 FILE	)	**§1.181**
FORMAT	)	

This is a decision on the petition, filed November 21, 2003 requesting the Withdrawal of the Holding of Abandonment of the above-identified application under 37 CFR §1.181.

The petition is **DISMISSED** as moot. The application to which the petition is addressed has not been abandoned.

The papers submitted as evidence includes a Notice of Abandonment for application number 09/883,022. It is noted that both applications were filed on the same day with the same title and same attorney docket number. Applicants' representatives may wish to review their records so as to avoid future confusion in papers filed in both cases.

Josie A. Ballato
Special Programs Examiner
Technology Center 2100
Computer Architecture, Software, and Information Security
(703) 308-0269

UNITED STATES PATENT AND TRADEMARK OFFICE

Commissioner for Patents
United States Patent and Trademark Office
P.O. Box 1450
Alexandria, VA 22313-1450
www.uspto.gov

PERKINS COIE LLP
PATENT-SEA
P.O. BOX 1247
SEATTLE WA 98111-1247

COPY MAILED

APR 0 3 2008

OFFICE OF PETITIONS

In re Application of
Meno et al.
Application No. 09/882,438
Filed: June 14, 2001
Attorney Docket No. 606928002US

DECISION ON PETITION

This is a decision on the petition under 37 CFR 1.181, filed October 10, 2007, to withdraw the holding of abandonment for the above-identified application. The petition was recently forwarded to the Office of Petitions for a decision on the merits. The Office sincerely apologizes for any inconvenience.

On May 17, 2007, the Office mailed a Notice of Allowance and Fee(s) Due and a Notice of Allowability, which set a three-month statutory period for reply. In the absence of a timely filed response, the application was held abandoned on August 18, 2007. A Notice of Abandonment was mailed on September 13, 2007.

In the petition, the practitioner asserted that he did not receive the Notice of Allowance and Fee(s) Due because the USPTO mailed it to an incorrect correspondence address. The practitioner stated that he filed a revocation and power of attorney, including a request for a change of correspondence address to Customer No. 25096, on May 30, 2006. However, the USPTO did not enter the change of correspondence address to Customer No. 25096. The practitioner asserted that the USPTO has continued to send official correspondence, including the Notice of Allowance and Fee(s) Due to former counsel of record, Brown Raysman. On petition, the practitioner requested that the Office withdraw the holding of abandonment, enter the revocation and power of attorney and change of correspondence address, and re-mail the Notice of Allowance and Fee(s) Due.

A review of the record indicates that the Office did not timely enter the revocation and power of attorney and the change of correspondence address filed on May 30, 2006. Consequently, the Notice of Allowance and Fee(s) Due was mailed to the wrong address. It is obvious from the record that the practitioner did not receive the Notice of Allowance and Fee(s) Due of May 30, 2006.

The Office has corrected the correspondence address and made it of record. The petition under 37 CFR 1.181 is **GRANTED**. No petition fee is required.

Technology Center Art Unit 2195 has been advised of this decision. The matter is being referred to the Technology Center's technical support staff for re-mailing of the Notice of Allowance and Fee(s) Due and the Notice of Allowability. The three (3) month statutory time period for responding to the Notice of Allowance and Fee(s) Due and the Notice of Allowability will be set to run from the re-mailing date of the Notices.

Telephone inquiries related to this decision may be directed to the undersigned at (571) 272-3211.

Christina Tartera Donnell

Christina Tartera Donnell
Senior Petitions Attorney
Office of Petitions

UNITED STATES PATENT AND TRADEMARK OFFICE

Commissioner for Patents
United States Patent and Trademark Office
P.O. Box 1450
Alexandria, VA 22313-1450
www.uspto.gov

SAMUEL H. DWORETSKY
AT&T CORP.
P.O. BOX 4110
MIDDLETOWN NJ 07748-4110

COPY MAILED

AUG 17 2005

OFFICE OF PETITIONS

In re Application of	:	
Belanger et al	:	
Application No. 09/882,440	:	DECISION GRANTING PETITION
Filed: June 15, 2001	:	UNDER 37 CFR 1.137(b)
Attorney Docket No. 1999-0075	:	

This is a decision on the petition under 37 CFR 1.137(b), filed May 25, 2005, to revive the above-identified application.

The petition is **GRANTED**.

The petition satisfies the conditions for revival pursuant to the provisions of 37 CFR 1.137(b) in that (1) the reply in the form of an amendment; (2) the petition fee; and (3) the required statement of unintentional delay have been received. Accordingly, the reply to the nonfinal Office action of September 22, 2004, is accepted as having been unintentionally delayed.

Telephone inquiries concerning this decision should be directed to the undersigned at (571) 272-3208.

This matter is being referred to Technology Center AU 2155.

Karen Creasy

Karen Creasy
Petitions Examiner
Office of Petitions
Office of the Deputy Commissioner
for Patent Examination Policy

UNITED STATES PATENT AND TRADEMARK OFFICE

Commissioner for Patents
United States Patent and Trademark Office
Washington, D.C. 20231
www.uspto.gov
DIW 12-01

OIPE JC134
MAR 2 1 2002
PATENT & TRADEMARK OFFICE

RECEIVED
MAR 29 2002
TC 2800 MAIL ROOM

Paper No. 4

ROYAL W. CRAIG
LAW OFFICES OF ROYAL W. CRAIG
SUITE 1319
210 N. CHARLES STREET
BALTIMORE, MD 21201

COPY MAILED

JAN 0 8 2002

OFFICE OF PETITIONS

In re Application of	:	
Alden S. Bradstock	:	DECISION DISMISSING
Application No. 09/882,461	:	PETITION
Filed: 15 June, 2001	:	
Att'y Dckt. No. BRADSTOCK-PA-1	:	

This is a decision on the petition filed on 9 October, 2001, requesting that the Notice of Omitted Items in a Nonprovisional Application, mailed on 16 August, 2001, be withdrawn.

The petition is **dismissed**.

On 15 June, 2001, the application was filed.

On 16 August, 2001, Initial Patent Examination Division mailed a "Notice of Omitted Item(s)" stating that the application had been accorded a filing date of 15 June, 2001, but that page 2 of the specification (description and claims) appeared to have been omitted.

In response, on 9 October, 2001, the present petition was filed, accompanied by a petition fee of $130.00. Petitioners assert that page 2 of the specification was not missing. Rather, the cover sheet is page 1 of the specification, and the first page of text, which is unnumbered, is actually page 2 of the specification. Petitioners have also included with the petition a copy of page 2 of the specification numbered as such.

Upon review, it is obvious from the petition that no pages of specification were actually missing on 15 June, 2001. Rather,

Copied from 09862461 on 09/17/2004

page 2 of the specification was simply unnumbered due to applicant's filing error. Petitioner should note that the pages of the specification including claims and abstract, however, must be numbered consecutively starting with 1.[1] However, the "Notice Of Omitted Item(s)" mailed 16 August, 2001, was correct in stating that Page 2 of the specification appeared to have been omitted. Therefore, the "Notice" was properly mailed and will not be withdrawn.

Accordingly, the petition is dismissed. The page 2 of the specification submitted with the petition will not be used for processing or examination purposes, but will be retained in the application file.

As the petition was not due to an error on the part of the USPTO, the petition fee will not be refunded.

To avoid further confusion, petitioner should submit an amendment prior to the first Office action to renumber the specification, starting with page 1 as the first page, so that the specification, including claims, and the abstract are numbered consecutively, starting with 1.

The application will be returned to the Office of Initial Patent Examination for further processing with a filing date of 15 June, 2001, using the application papers supplied on that date.

Telephone inquires should be directed to Petitions Attorney Douglas I. Wood at 703 308-6918.

Beverly M. Flanagan
Supervisory Petitions Attorney
Office of Petitions
Office of the Deputy Commissioner
for Patent Examination Policy

[1] 37 CFR 1.52(b)(5).

Copied from 09862461 on 09/17/2004

UNITED STATES PATENT AND TRADEMARK OFFICE

Commissioner for Patents
United States Patent and Trademark Office
P.O. Box 1450
Alexandria, VA 22313-1450
www.uspto.gov

KRAMER LEVIN NAFTALIS & FRANKEL LLP
INTELLECTUAL PROPERTY DEPARTMENT
919 THIRD AVENUE
NEW YORK, NY 10022

COPY MAILED

MAR 29 2005

OFFICE OF PETITIONS

In re Application of	:
Stephen O. Friend, Edward W.S.	:
Bryant and Harold C. Fowler	: DECISION REFUSING STATUS
Application No. 09/882,464	: UNDER 37 CFR 1.47(a)
Filed: June 14, 2001	:
For: MULTILAYERED POLYMERIC STRUCTURE	

This is in response to the "Petition Under 37 CFR 1.47(a)," filed February 4, 2002. The application file was recently forwarded to this office for reivew.

The petition is dismissed.

Rule 47 applicant is given TWO MONTHS from the mailing date of this decision to reply, correcting the below-noted deficiencies. Any reply should be entitled "Request for Reconsideration of Petition Under 37 CFR 1.47(a)," and should only address the deficiencies noted below, except that the reply may include an oath or declaration executed by the non-signing inventor. **FAILURE TO RESPOND WILL RESULT IN ABANDONMENT OF THE APPLICATION.** Any extensions of time will be governed by 37 CFR 1.136(a).

The above-identified application was filed on June 14, 2001 without an executed oath or declaration and naming Stephen O. Friend, Edward W.S. Bryant and Harold C. Fowler as joint inventors.

Accordingly, on July 5, 2001, a "Notice to File Missing Parts of Application" was mailed, requiring an executed oath or declaration, and a surcharge for its late filing.

In response, on February 4, 2002, the instant petition and a four (4) month extension of time were filed.

A grantable petition under 37 CFR 1.47(a) requires:

(1) proof that the non-signing inventor cannot be reached or refuses to sign the oath or declaration after having been presented with the application papers (specification, claims and drawings);

(2) an acceptable oath or declaration in compliance with 35 U.S.C. §§ 115 and 116;

(3) the petition fee; and

(4) a statement of the last known address of the non-signing inventor.

Applicant lacks items (1) and (2), as set forth above.

As to item (1), applicant appears to demonstrate that the non-signing inventor was only presented with the declaration. Unless the non-signing inventor was presented with a copy of the application papers (specification, claims and drawings), the non-signing inventor could not attest that he has "reviewed and understands the application papers" and therefore could not sign the declaration which he was given. Accordingly, Rule 47 applicant failed to show or provide proof that the inventor has refused to sign the declaration. See MPEP 409.03(d). Petitioner should show that a copy of the application papers was presented to the non-signing inventor, but that he did not respond to, or refused, the request that he sign the oath/declaration in order to show that the inventor has refused to join in the application. The proof of the pertinent events should be made by a statement of someone with first hand knowledge of the events.

As to item (2), an oath or declaration for the patent application in compliance with 37 CFR 1.63 and 1.64 still has not been presented. The declaration does not set forth the citizenship or residence of the non-signing inventor. An oath or declaration in compliance with 37 CFR 1.63 and 1.64 is REQUIRED. See MPEP 409.03(a).

Further correspondence with respect to this matter should be addressed as follows:

By mail: Mail Stop Petition
Commissioner for Patents
Box 1450
Alexandria, VA 22313

By FAX: (703) 872-9306
Attn: Office of Petitions

By hand: Customer Service Window
Randolph Building
401 Dulany Street
Alexandria, VA 22314

Telephone inquiries related to this decision should be directed to the undersigned at (571)272-3228.

Edward J. Tannouse
Petitions Attorney
Office of Petitions
United States Patent and Trademark Office

UNITED STATES PATENT AND TRADEMARK OFFICE

Commissioner for Patents
United States Patent and Trademark Office
P.O. Box 1450
Alexandria, VA 22313-1450
www.uspto.gov

KRAMER LEVIN NAFTALIS & FRANKEL LLP
INTELLECTUAL PROPERTY DEPARTMENT
919 THIRD AVENUE
NEW YORK, NY 10022

COPY MAILED

MAY 1 0 2005

OFFICE OF PETITIONS

In re Application of :
Stephen O. Friend, Edward W.S. :
Bryant and Harold C. Fowler : DECISION REFUSING STATUS
Application No. 09/882,464 : UNDER 37 CFR 1.47(a)
Filed: June 14, 2001 :
For: MULTILAYERED POLYMERIC
STRUCTURE

This is in response to the "Request for Reconsideration of Petition Under 37 CFR 1.47(a)," filed May 2, 2005.

The petition is dismissed.

Rule 47 applicant is given TWO MONTHS from the mailing date of this decision to reply, correcting the below-noted deficiencies. Any reply should be entitled "Request for Reconsideration of Petition Under 37 CFR 1.47(a)," and should only address the deficiencies noted below, except that the reply may include an oath or declaration executed by the non-signing inventor. **FAILURE TO RESPOND WILL RESULT IN ABANDONMENT OF THE APPLICATION.** Any extensions of time will be governed by 37 CFR 1.136(a).

The above-identified application was filed on June 14, 2001 without an executed oath or declaration and naming Stephen O. Friend, Edward W.S. Bryant and Harold C. Fowler as joint inventors.

Accordingly, on July 5, 2001, a "Notice to File Missing Parts of Application" was mailed, requiring an executed oath or declaration, and a surcharge for its late filing.

In response, on February 4, 2002, the original petition was filed.

A grantable petition under 37 CFR 1.47(a) requires:

(1) proof that the non-signing inventor cannot be reached or refuses to sign the oath or declaration after having been presented with the application papers (specification, claims and drawings);

(2) an acceptable oath or declaration in compliance with 35 U.S.C. §§ 115 and 116;

(3) the petition fee; and

(4) a statement of the last known address of the non-signing inventor.

Applicant lacks items (2), as set forth above.

As to item (2), an oath or declaration for the patent application in compliance with 37 CFR 1.63 and 1.64 still has not been presented. The declaration submitted May 2, 2005 is not signed. An oath or declaration in compliance with 37 CFR 1.63 and 1.64 is REQUIRED. See MPEP 409.03(a).

Please note, the $200.00 petition fee, submitted May 2, 2005, is unnecessary and will be refunded to deposit account no. 50-0540.

Further correspondence with respect to this matter should be addressed as follows:

By mail: Mail Stop Petition
Commissioner for Patents
Box 1450
Alexandria, VA 22313

By FAX: (703) 872-9306
Attn: Office of Petitions

By hand: Customer Service Window
Randolph Building
401 Dulany Street
Alexandria, VA 22314

Telephone inquiries related to this decision should be directed to the undersigned at (571)272-3228.

Edward J. Tannouse
Petitions Attorney
Office of Petitions/Patent
United States Patent and Trademark Office

UNITED STATES PATENT AND TRADEMARK OFFICE

Commissioner for Patents
United States Patent and Trademark Office
P.O. Box 1450
Alexandria, VA 22313-1450
www.uspto.gov

KRAMER LEVIN NAFTALIS & FRANKEL LLP
INTELLECTUAL PROPERTY DEPARTMENT
1177 AVENUE OF THE AMERICAS
NEW YORK, NY 10036

COPY MAILED

JUN 21 2005

OFFICE OF PETITIONS

In re Application of
Stephen O. Friend, Edward W.S. Bryant and
Harold C. Fowler
Application No. 09/882,464
Filed: June 14, 2001
For: MULTILAYERED POLYMERIC
STRUCTURE

DECISION GRANTING PETITION
UNDER 37 CFR 1.47(a)

This is in response to the "Second Request For Reconsideration of Petition Under 37 CFR 1.47(a)," filed June 9, 2005.

The petition is **granted**.

Petitioner has shown that the non-signing inventor has refused to join in the filing of the above-identified application.

The above-identified application and papers have been reviewed and found in compliance with 37 CFR 1.47(a). This application is hereby accorded Rule 1.47(a) status. As provided in Rule 1.47(c), this Office will forward notice of this application's filing to the non-signing inventor at the address given in the petition. Notice of the filing of this application will also be published in the Official Gazette.

This application is being forwarded to Publishing Division.

Telephone inquiries regarding this decision should be directed to the undersigned at (571) 272-3228.

Edward J. Tannouse
Petitions Attorney
Office of Petitions/Patent
United States Patent and Trademark Office

UNITED STATES PATENT AND TRADEMARK OFFICE

Commissioner for Patents
United States Patent and Trademark Office
P.O. Box 1450
Alexandria, VA 22313-1450
www.uspto.go

STEPHEN O. FRIEND
63 SURREY LANE
BOXWOOD, MA 01921

COPY MAILED
JUN 21 2005
OFFICE OF PETITIONS

In re Application of
Stephen O. Friend, Edward W.S. Bryant and
Harold C. Fowler
Application No. 09/882,464
Filed: June 14, 2001
For: MULTILAYERED POLYMERIC
STRUCTURE

Dear STEPHEN O. FRIEND:

You are named as a joint inventor in the above identified United States patent application, filed under the provisions of 35 U.S.C. 116 (United States Code), and 37 CFR 1.47(a), Rules of Practice in Patent Cases. Should a patent be granted on the application you will be designated therein as a joint inventor.

As a named inventor you are entitled to inspect any paper in the file wrapper of the application, order copies of all or any part thereof (at a prepaid cost per 37 CFR 1.19) or make your position of record in the application. Alternatively, you may arrange to do any of the preceding through a registered patent attorney or agent presenting written authorization from you. If you care to join the application, counsel of record (see below) would presumably assist you. Joining in the application would entail the filing of an appropriate oath or declaration by you pursuant to 37 CFR 1.63.

Telephone inquiries regarding this communication should be directed to the undersigned at (571) 272-3228. Requests for information regarding your application should be directed to the File Information Unit at (703) 308-2733. Information regarding how to pay for and order a copy of the application, or a specific paper in the application, should be directed to Certification Division at (703) 308-9726 or 1 (800) 972-6382 (outside the Washington D.C. area).

Edward J. Tannouse
Petitions Attorney
Office of Petitions/Patent
United States Patent and Trademark Office

KRAMER LEVIN NAFTALIS & FRANKEL LLP
INTELLECTUAL PROPERTY DEPARTMENT
1177 AVENUE OF THE AMERICAS
NEW YORK, NY 10036

UNITED STATES PATENT AND TRADEMARK OFFICE

Commissioner for Patents
United States Patent and Trademark Office
P.O. Box 1450
Alexandria, VA 22313-1450
www.uspto.gov

Paper No. ~~14~~ 15

KEVIN K. JOHANSON
WORKMAN NYDEGGER & SEELEY
1000 EAGLE GATE TOWER
60 EAST SOUTH TEMPLE
SALT LAKE CITY, UT 84111

COPY MAILED
JUN 1 0 2004
OFFICE OF PETITIONS

In re Application of :
Hsiang-Lan Lung :
Application No. 09/882,480 : ON PETITION
Filed: June 14, 2001 :
Attorney Docket No. 15313.1 :

This is a decision on the petition under 37 CFR 1.137(b), filed April 30, 2004, to revive the above-identified application.

The petition is **GRANTED**.

The above-identified application became abandoned for failure to reply in a timely manner to the final Office action mailed May 16, 2003, which set a shortened statutory period for reply of three (3) months. No extensions of time under the provisions of 37 CFR 1.136(a) was obtained. Accordingly, the application became abandoned on August 18, 2003.

An extension of time under 37 CFR 1.136 must be filed prior to the expiration of the maximum extendable period for reply. See In re Application of S., 8 USPQ2d 1630, 1631 (Comm'r Pats. 1988). Accordingly, the $950 extension of time submitted with the petition on April 30, 2004 was subsequent to the maximum extendable period for reply, this fee is unnecessary and will be credited to petitioner's deposit account number 23-3178.

Telephone inquiries concerning this decision should be directed to the undersigned at (703) 306-5594.

The application file is being forwarded to Technology Center 2800, Art Unit 2814 for processing the Request for Continued Examination under 37 CFR 1.114 filed with the instant petition.

Retta Williams

Retta Williams
Petitions Examiner
Office of Petitions
Office of the Deputy Commissioner
for Patent Examination Policy

UNITED STATES PATENT AND TRADEMARK OFFICE

COMMISSIONER FOR PATENTS
UNITED STATES PATENT AND TRADEMARK OFFICE
P.O. BOX 1450
ALEXANDRIA, VA 22313-1450
www.uspto.gov

KLARQUIST SPARKMAN LLP
121 S.W. SALMON STREET
SUITE 1600
PORTLAND OR 97204

COPY MAILED

AUG 16 2005

OFFICE OF PETITIONS

In re Application of	:
Yaron Goland	:
Application No. 09/882,491	: DECISION ACCORDING STATUS
Filed: June 15, 2001	: UNDER 37 CFR 1.47(b)
For: NETWORKED DEVICE BRANDING FOR	:
SECURE INTERACTION IN TRUST WEBS ON	:
OPEN NETWORKS	:

This is in response to the petition under 37 CFR 1.47(b), filed June 15, 2001. This matter was recently forwarded to the Office of Petitions for a decision on the present petition. The Office apologizes for any inconvenience to applicant.

The petition is granted.

Applicant showed that the non-signing inventor refused to join in the filing of the above-identified application after having been presented with the application papers. Specifically, the Declaration of Facts of Danielle Johnston Holmes, Corporate Attorney, established that Ms. Holmes sent an email to the inventor presenting the patent application for his review and execution. Although the inventor responded to the email, he did not execute the application. Ms. Holmes stated that she sent a second email to the inventor again presenting him with the application papers to execute, and requesting that the inventor inform her whether he would execute the application. To date, Ms. Holmes has not received a response to the request. Copies of the aforementioned communications accompany the petition.

In addition, applicant demonstrated that Microsoft Corporation has a proprietary interest in the above-identified application with a copy of the "Microsoft Corporation Employee Nondisclosure Agreement,"

showing that the inventor had an obligation to assign any patent rights to Microsoft Corporation. Applicant paid the petition fee and submitted a declaration in compliance with 37 CFR 1.63 and 1.64. Lastly, applicant demonstrated that such action is necessary to prevent irreparable damage.

This application and papers have been reviewed and found in compliance with 37 CFR 1.47(b). This application is hereby accorded Rule 1.47(b) status.

As provided in Rule 1.47(c), this Office will forward notice of this application's filing to the non-signing inventor at the address given in the petition. Notice of the filing of this application will also be published in the Official Gazette.

This matter is being referred to Technology Center Art Unit 2135.

Telephone inquiries related to this decision should be directed to the undersigned at (571) 272-3211.

Christina Tartera Donnell

Christina Tartera Donnell
Senior Petitions Attorney
Office of Petitions

UNITED STATES PATENT AND TRADEMARK OFFICE

COMMISSIONER FOR PATENTS
UNITED STATES PATENT AND TRADEMARK OFFICE
P.O. BOX 1450
ALEXANDRIA, VA 22313-1450
www.uspto.gov

Yaron Goland
1864 NE 55th Way
Redmond, WA 98052

COPY MAILED
AUG 16 2005
OFFICE OF PETITIONS

In re Application of :
Yaron Goland :
Application No. 09/882,491 : LETTER
Filed: June 15, 2001 :
For: NETWORKED DEVICE BRANDING FOR :
SECURE INTERACTION IN TRUST WEBS ON OPEN :
NETWORKS :

Dear Mr. Goland:

You are named as a sole inventor in the above-identified United States patent application filed under the provisions of 35 U.S.C. 116 (United States Code) and 37 CFR 1.47(b), Rules of Practice in Patent Cases. Should a patent be granted on the application you will be designated therein as a joint inventor.

As a named inventor you are entitled to inspect any paper in the file wrapper of the application, order copies of all or any part thereof (at a prepaid cost per 37 CFR 1.19) or make your position of record in the application. Alternatively, you may arrange to do any of the preceding through a registered patent attorney or agent presenting written authorization from you. If you care to join the application, counsel of record (see below) would presumably assist you. Joining in the application would entail the filing of an appropriate oath or declaration by you pursuant to 37 CFR 1.63.

Requests for information regarding your application should be directed to the File Information Unit at (703) 308-2733. Information regarding how to pay for and order a copy of the application, or a specific paper in the application should be directed to Certification Division at (703) 308-9726 or 1-800-972-6382 (outside the Washington D.C. area).

Christina Tartera Donnell
Christina Tartera Donnell
Senior Petitions Attorney
Office of Petitions

KLARQUIST SPARKMAN LLP
121 S.W. SALMON STREET
SUITE 1600
PORTLAND OR 97204

UNITED STATES PATENT AND TRADEMARK OFFICE

Commissioner for Patents
United States Patent and Trademark Office
P.O. Box 1450
Alexandria, VA 22313-1450
www.uspto.gov

COPY MAILED
SEP 19 2006
OFFICE OF PETITIONS

RIMAS LUKAS
530 JACKSON ST
2ND FLOOR
SAN FRANCISCO CA 94133

In re Application of	:	
Richardson, et al.	:	
Application No. 09/882,530	:	DECISION ON PETITION
Filed: June 15, 2001	:	TO WITHDRAW
Attorney Docket No. ARC01-20036.00	:	FROM RECORD
	:	

This is a decision on the Request to Withdraw as attorney or agent of record under 37 C.F.R. § 1.36(b), filed June 20, 2006.

The request is **APPROVED**.

A grantable request to withdraw as attorney/agent of record must be signed by every attorney/agent seeking to withdraw or contain a clear indication that one attorney is signing on behalf of another/others. A request to withdraw will not be approved unless at least 30 (thirty) days would remain between the date of approval and the later of the expiration date of a time to file a response or the expiration date of the maximum time period which can be extended under 37 C.F.R. § 1.136(a).

The request was signed by Rimas T. Lukas on behalf of all attorneys of record who are associated with customer No. 34690.

All attorneys/agents associated with the Customer Number 34690 have been withdrawn.

Applicant is reminded that there is no attorney of record at this time.

The request to change the correspondence of record is not acceptable as the requested correspondence address is not that of: (1) the first named signing inventor; or (2) an intervening assignee of the entire interest under 37 C.F.R 3.71. All future communications from the Office will be directed to the assignee of the entire interest at the first copied address below until otherwise properly notified by the applicant.

Telephone inquiries concerning this decision should be directed to April Wise at 571-272-1642.

April M. Wise
Petitions Examiner
Office of Petitions

cc: JAN HUMMEL
MOLECULAR DEVICES CORPORATION
1311 ORLEANS DRIVE
SUNNYVALE, CA 94089

cc: J. PETER FASSE
FISH & RICHARDSON, P.C.
225 FRANKLIN STREET
BOSTON, MA 02110

UNITED STATES PATENT AND TRADEMARK OFFICE

UNITED STATES DEPARTMENT OF COMMERCE
United States Patent and Trademark Office
Address: COMMISSIONER FOR PATENTS
P.O. Box 1450
Alexandria, Virginia 22313-1450
www.uspto.gov

APPLICATION NUMBER	FILING OR 371 (c) DATE	FIRST NAMED APPLICANT	ATTY. DOCKET NO./TITLE
09/882,530	06/15/2001	Derrick A. Richardson	ARC012003600

CONFIRMATION NO. 9930

OC000000020479207

OC000000020479207

34690
RIMAS LUKAS
530 JACKSON ST
2ND FLOOR
SAN FRANCISCO, CA 94133

Date Mailed: 09/18/2006

NOTICE REGARDING CHANGE OF POWER OF ATTORNEY

This is in response to the Power of Attorney filed 06/20/2006.

- The withdrawal as attorney in this application has been accepted. Future correspondence will be mailed to the new address of record. 37 CFR 1.33.

APRIL M WISE
OP (571) 272-1642

FORMER ATTORNEY/AGENT COPY

SPE RESPONSE FOR CERTIFICATE OF CORRECTION

Paper No.: —

DATE : 2/4/08

TO SPE OF : ART UNIT 2822

SUBJECT : Request for Certificate of Correction for Appl. No.: 9/882534 Patent No: 7053432B2

A response is requested with respect to a request for a certificate of correction.

With respect to the change(s) requested to correct Office and/or Applicant's errors, should the patent read as shown in the certificate of correction attached herewith or the COCIN document(s), in IFW images for the above-identified patented application? No new matter should be introduced, nor should the scope or meaning of the claims be changed.

If the response is for an IFW, within 7 days, please complete and forward the response, to the employee (named below) via scanning into application images, using document code **COCX**.

If the response is for a paper file wrapper, please complete the response and forward the response with the paper file wrapper, to the employee (named below), within 7 days, to:

Certificates of Correction Branch (CofC)
South Tower - 9A22
Palm Location 7580

VIRGINIA TOLBERT
Certificates of Correction Branch
703-308-9390 ext. 113

Thank You For Your Assistance

The request for issuing the above-identified correction(s) is hereby:
Note your decision on the appropriate box.

- ☐ **Approved** — All changes apply.
- ☐ **Approved in Part** — Specify below which changes **do not** apply.
- ☐ **Denied** — State the reasons for denial below.

Comments: _____

Zachary Smith
SPE

2822
Art Unit

UNITED STATES PATENT AND TRADEMARK OFFICE

Commissioner for Patents
United States Patent and Trademark Office
P.O. Box 1450
Alexandria, VA 22313-1450
www.uspto.gov

August 30, 2004

PERKINS COLE LLP
101 JEFFERSON DRIVE
MENLO PARK CA 94025-1114

SEP 1 2004

In re Application of:	:	
KALNITSKY, *et al.*	:	
Application No. 09/882,538	:	DECISION ON PETITION TO
Filed: June 15, 2001	:	WITHDRAW HOLDING OF
Attorney Docket No.: 60305-307201	:	ABANDONMENT

This is a decision on the petition filed, January 23, 2004, requesting withdrawal of the holding of abandonment for the above-identified application.

The petition is **granted**.

The application was held abandoned for failure to respond to the Office action mailed January 24, 2003. A Notice of Abandonment was mailed December 26, 2003.

Petitioner asserts that on April 24, 2003, a response was timely filed. To support this assertion, petitioner has submitted a copy of the response and a copy of an itemized postcard date stamped by the United States Patent and Trademark Office (PTO) on April 30, 2003.

A review of the application file record reveals that the above-identified response was not associated with the application file at the time the Notice of Abandonment was mailed, but has since been located and matched therewith.

For the above stated reason, the Notice of Abandonment is hereby vacated and the holding of abandonment withdrawn. The application is restored to pending status.

The application file is being forwarded to the examiner for appropriate action.

Inquiries regarding this decision should be directed to Lissi Mojica Marquis at (571) 272-1596.

Sharon A. Gibson, Director
Technology Center 2800
Semiconductors, Electrical and Optical
Systems and Components

UNITED STATES PATENT AND TRADEMARK OFFICE

Commissioner for Patents
United States Patent and Trademark Office
P.O. Box 1450
Alexandria, VA 22313-1450
www.uspto.gov

ZILKA-KOTAB, PC
P.O. Box 721120
San Jose, CA 95172-1120

MAILED

APR 2 6 2005

Technology Center 2100

In re Application of:
Umair KHAN,, et al.
Application No. 09/882,541
Filed: June 15, 2001
For: SYSTEM, METHOD AND ARTICLE OF MANUFACTURE FOR CONDUCTING A TRANSACTION ON ANY SITE ON THE WORLD WIDE WEB ON BEHALF OF A USER FROM ANY DEVICE

DECISION ON REQUEST TO WITHDRAW AS ATTORNEY OR AGENT

This is a decision on the Request to Withdraw from Representation filed February 14, 2005.

A grantable request to withdraw as attorney of record should indicate thereon the present mailing addresses of the attorney(s) who is/are withdrawing from the record and of the applicant. The request for withdrawal must be signed by every attorney seeking to withdraw or contain a clear indication that one attorney is signing on behalf of another/others. A request to withdraw will not be approved unless at least 30 (thirty) days would remain between the date of approval and the later of the expiration date of a time to file a response or the expiration date of the maximum time period which can be extended under 37 C.F.R. § 1.136(a). The effective date of withdrawal being the date of decision and not the date of request. See M.P.E.P. § 402.06. 37 C.F.R. § 1.36 further requires that the applicant or patent owner be notified of the withdrawal of the attorney or agent.

The request is **GRANTED**.

Because there was no request for a correspondence address change, all future communications from the U.S. Patent and Trademark Office (Office) ***will continue to be*** addressed to the above-mentioned address until further notice. Applicant is reminded of the obligation to provide the Office with any change of correspondence address to ensure receipt of all correspondence.

For Vincent N. Trans
Special Program Examiner
Technology Center 2100
Computer Architecture, Software, and
Information Security
571-272-3613

UNITED STATES PATENT AND TRADEMARK OFFICE

Commissioner for Patents
United States Patent and Trademark Office
P.O. Box 1450
Alexandria, VA 22313-1450
www.uspto.gov

STEVEN P. SKABRAT
C/O BLAKELY, SOKOLOFF, TAYLOR &
ZAFMAN LLP
12400 WILSHIRE BOULEVARD, SEVENTH FLOOR
LOS ANGELES, CA 90025

MAIL

AUG 1 5 2005

DIRECTOR OFFICE
TECHNOLOGY CENTER 2600

In re Application of
S. Bennett, et al.
Application No. 09/882,563
Filed: June 15, 2001
For: **SELECTING ONE OF MULTIPLE SPEECH RECOGNIZERS IN A SYSTEM BASED ON PERFORMANCE PREDICTIONS RESULTING FROM EXPERIENCE**

DECISION ON PETITION
TO WITHDRAW HOLDING OF
ABANDONMENT

This is a decision on the Petition to Withdraw the Holding of Abandonment filed July 27, 2005, pursuant to 37 C.F.R. 1.181(a). No fee is required.

This application was held abandoned for failure to timely file the Issue fee in response to the Notice of Allowance and Issue Fee Due mailed January 13, 2005. A Notice of Abandonment was mailed May 25, 2005.

Petitioner alleges that they did not receive the Notice of Allowance mailed January 13, 2005. In support of the petition, petitioner has provided a date stamped post card receipt showing that a Revocation and Power of Attorney was filed February 6, 2004. The Power of Attorney changed the correspondence address prior to the mailing of the Notice of Allowance on January 13, 2005. The Notice of Allowance was mistakenly mailed to a previous correspondence address resulting in an irregularity in mailing.

In view of the above stated reasons, the Notice of Allowance and Issue Fee Due mailed January 13, 2005 is hereby vacated. Also, the Notice of Abandonment mailed May 25, 2005 is hereby vacated and the holding of Abandonment withdrawn.

The petition is **GRANTED**.

Since it has been established that the Notice of Allowance mailed January 13, 2005 was not received, it is presumed that applicant also failed to receive the Notice of Allowability mailed with the Notice of Allowance. Accordingly, a new Notice of Allowance and Issue Fee Due will be mailed to the proper correspondence address of record and the period for response will be set to run from the date of the new mailing. A copy of the original Notice of Allowability that was mailed on January 13, 2005 will be included with the new mailing. Furthermore, the Revenue,

Accounting and Management (RAM) records show that an issue fee in the amount of $1400.00 and a publication fee in the amount of $300 have been charged on July 28, 2005.

Therefore, after the mailing of the new Notices, the file will be forwarded to Office of Publications to await a response to the Notice of Allowance and Issue Fee Due, which may include a request from applicant to reapply the previously paid issue fee.

Doris To
Special Program Examiner
Technology Center 2600
Communications

UNITED STATES PATENT AND TRADEMARK OFFICE

UNDER SECRETARY OF COMMERCE FOR INTELLECTUAL PROPERTY AND
DIRECTOR OF THE UNITED STATES PATENT AND TRADEMARK OFFICE
WASHINGTON, DC 20231
www.uspto.gov

#5

Peter V. Schroeder
Crutsinger & Booth
1601 Elm Street, Suite 1950
Dallas, TX 75201-4744

MAILED

JUN 30 2003

Office of the Director
Group 3600

In re application of
Philip D. Nguyen et al.
Application No. 09/882,572
Filed: June 13, 2001
For: METHODS AND APPARATUS FOR GRAVEL PACKING OR FRAC PACKING WELLS

DECISION ON PETITION TO WITHDRAW THE HOLDING OF ABANDONMENT

This is in response to applicants' petition to withdraw the holding of abandonment filed in the United States Patent and Trademark Office (USPTO) on March 31, 2003.

The petition is **DISMISSED as moot**.

A review of the application file reveals that an Office action was mailed on August 7, 2002 wherein a three-month shortened statutory period for reply was set. Since no response had been matched with the file and the six-month statutory period for response had expired, the application was held to be abandoned, and a notice to that effect was mailed on March 7, 2003.

A further review reveals that the original amendment of January 24, 2003, including a three-month extension of time, has since been matched with the file. That original amendment is timely. Since a timely response to the Office action of August 7, 2002 has been filed, the abandonment will be withdrawn. Since the original of the amendment in question is now in the file, there is no need to treat the petition on the merits and it is therefore dismissed as moot.

This application will be forwarded to the Supervisory Legal Instruments Examiner to withdraw the abandonment, return the application to pending status and enter the original amendment filed January 24, 2003 before forwarding to the examiner for treatment on the merits.

Steven N. Meyers, Special Programs Examiner
Patent Technology Center 3600
Telephone No.: (703) 308-3868

SNM/tpl: 6/27/03

UNITED STATES PATENT AND TRADEMARK OFFICE

Commissioner for Patents
United States Patent and Trademark Office
P.O. Box 1450
Alexandria, VA 22313-1450
www.uspto.gov

THOMAS H. CLOSE
PATENT LEGAL STAFF
EASTMAN KODAK COMPANY
343 STATE STREET
ROCHESTER NY 14650-2201

COPY MAILED
APR 21 2006
OFFICE OF PETITIONS

In re Patent No. 6,761,046 :
Issued: July 13, 2004 :
Application No. 09/882,599 : ON PETITION
Filed: June 15, 2001 :
Attorney Docket Number: 82158/MGB :

This is a decision on the petition, filed June 7, 2005, under 37 CFR 3.81 to correct the assignee's name on the front of the Patent.

The petition is **GRANTED**.

Petitioner states that the assignee is Eastman Kodak Company, and that the failure to include the correct assignee name on the Fee(s) Transmittal form PTOL-85(b) was inadvertent. Accordingly, petitioner requests that a certificate of correction be issued to reflect the correct assignee on the front page of the Letters Patent.

37 CFR 3.81(b), effective June 25, 2004, reads:

> *After payment of the issue fee:* Any request for issuance of an application in the name of the assignee submitted after the date of payment of the issue fee, and any request for a patent to be corrected to state the name of the assignee, must state that the assignment was submitted for recordation as set forth in § 3.11 before issuance of the patent, and must include a request for a certificate of correction under § 1.323 of this chapter (accompanied by the fee set forth in § 1.20(a) and the processing fee set forth in § 1.17(i) of this chapter.

A certificate of correction was filed January 7, 2005 and the instant request, as required by 3.81(b), authorizes the charge to deposit account no. 05-0225 of the petition fee and the certificate of correction fee. Further, Office assignment records reflect that Eastman Kodak Company is the assignee of record. Accordingly, as the request complies with the provisions of 37 CFR 3.81(b), it would be appropriate for a certificate of correction to issue.

Deposit account no. 05-0225 has been charged in the amount of $130.00 for the petition and $100.00 for the certificate of correction.

Additionally, there is no indication that petitioner herein was ever empowered to handle matters related to this patent. If petitioner desires to receive future correspondence regarding this patent, the appropriate power of attorney documentation must be

submitted. If the new power of attorney and/or change of address is signed by an assignee, the assignee must comply with the requirements of 37 CFR 3.73(b). This decision will be mailed to petitioner, however, all future correspondence will be mailed solely to the correspondence address of record. If petitioner desires to receive future correspondence regarding any Maintenance Fee Reminder which **may** be mailed concerning this patent, a Fee Address should be submitted to Maintenance Fee Division.

Inquiries concerning this decision should be directed to the undersigned at (571) 272-3212. Any questions concerning the issuance of a certificate of correction should be directed to the Certificates of Correction Branch at (703) 305-8309.

This matter is being referred to the Certificates of Correction Branch for issuance of a certificate of correction.

Patricia Faison-Ball

Patricia Faison-Ball
Senior Petitions Attorney
Office of Petitions

UNITED STATES PATENT AND TRADEMARK OFFICE

COMMISSIONER FOR PATENTS
UNITED STATES PATENT AND TRADEMARK OFFICE
P.O. BOX 1450
ALEXANDRIA, VA 22313-1450
www.uspto.gov

Mailed : JAN 20 2004

VJ
Paper Number 21

In re Application of	:	DECISION
Ren et al.	:	ON PETITION
Serial No.: 09/882,699	:	
Filed: June 15, 2001	:	
For: Metallic layer component for	:	
use in a direct oxidation fuel	:	

This is a decision on a petition under 37 CFR 1.144 filed May 28, 2003 requesting review of a restriction requirement or, more properly, a requirement for species election set forth in the Office action mailed October 11, 2002 and made final in the Office action mailed January 29, 2003.

That species election requirement involved nine groups of species viz. claims 1-12 (I), 13-22 (II), 23 (III), 24-62 (IV), 63-70 (V), 71-92 (VI), 93-103 (VII), 104-109 (VIII) and 110 (IX). For future reference, the group number is set forth as a Roman numeral within parenthesis beside each set of claims.

It is noted that the examiner referred to the species of each of Groups I through VIII as being drawn to a direct oxidation fuel cell despite the fact that the claims of certain Groups, viz., II, V, VII and VIII, themselves recite a direct oxidation fuel cell "system." Although that is potentially confusing, nevertheless, it appears reasonable to proceed on the basis that the examiner divided the present claims into various species of a direct oxidation fuel cell and, likewise, various species of a direct oxidation fuel cell system. It is further noted that the examiner unaccountably included Group III in the species requirement even though the sole claim 23 in that Group was cancelled by a preliminary amendment filed June 18, 2002. Henceforth, this group is dropped from the discussion below.

The applicants elected to prosecute the species of Group IV, claims 24-62, drawn to a direct oxidation fuel cell, and traversed the species requirement. See the amendments filed November 12, 2002 and January 3, 2003.

Following an Office action on the merits, the applicants amended the claims of Group IV by introducing certain limitations for an anodic as well as a cathodic metallic diffusion layer and added new claims 111-113 dependent from claims 24 and 44 and, concurrently, filed the instant petition. See the amendment filed May 28, 2003. In setting forth the present decision, the above-mentioned amendment has been taken into account including the fact that claims 111-113 are to be considered as belonging to the elected species of Group IV.

The applicants' principal arguments are: (a) claims 13-22, drawn to a direct oxidation fuel system, include the subject matter of claims 1-12 citing Figures 1 and 2A and, hence, these two sets of claims are not independent. Applicants posit that since "a direct oxidation fuel cell system cannot exist without a direct oxidation fuel cell" the foregoing two sets of claims are not "capable of separate use or the "subject of separate sales" (pp. 2-3 of the petition); (b) claims 24-62 claim the same invention as claims 1-12, especially, when the cathode [metallic] diffusion layer in the latter set is also recited in claims 44-62 belonging to the former set of claims (cf. entity denoted by CL under Group IV in the following table) (p. 4 of the petition); (c) claims 63-70 are related to claims 1-62 partly because the direct oxidation fuel cell system embraced by the former set comprises the direct oxidation fuel cell described by claims 24-62 (pp. 4-5 of the petition); (d) claims 71-103 are drawn to a single invention in that claims 71-92 are directed to a direct oxidation fuel cell and claims 93-103 are drawn to a direct oxidation fuel cell system that comprises the "same" components (p. 5 of the petition); and, finally, (e) claims 1-70 constitute one species and claims 71-103 constitute a second species which should include claim 110 (pp. 5-6 of the petition). Applicants contend that claims 104-109, being broader than claim 1, are generic and claim 110 is likewise asserted to be generic (p. 6 of the petition).

In order to address the applicants' arguments and to better assess the species election requirement, attention is drawn to a "claim diagram" as set forth in the following Table. Note that the representative claims depicted in the Table include dependent claims especially where their limitations cause a significant overlap between different groups. Moreover, the terms "fuel cell" and "fuel cell system", as used in the Table, are to be understood as referring to "direct oxidation fuel cell" and "direct oxidation fuel cell system," respectively.

Group	I	II	IV*	V	VI	VII	VIII	IX
Repre-sentative claim(s)	1	13	24, 44	63, 64	71	93, 94	104	110
Invention	Fuel cell	Fuel cell system	Fuel cell (*Elect-ed)	Fuel cell system	Fuel cell	Fuel cell system	Fuel cell system	Means for generating electricity
	M {Me, CaA, CaC}		M {Me, ACt, CCt}		M {Me, CL, ACt, CCt}			
		Fc {Me, A, C}		Fc {M_c, A, C}		Fc {M_{gen}, A, C}	$Fc^{\dagger}$ = M {Me, A, C}	$Fc^{\dagger}$ = M {Me, A, C}
	CL	CL	CL (44)			CL		
	AL	AL	AL	AL				
	L	L	L		L			
		$\mathscr{E}$		$\mathscr{E}$	$\mathscr{E}$	$\mathscr{E}$	$\mathscr{E}^{\dagger}$	$\mathscr{E}^{\dagger}$
		O_2		O_2		O_2	$O_2^{\dagger}$	$O_2^{\dagger}$
		G		G (64)		G (94)		
				Cat		Cat		
							$\mathscr{E}_{dist}^{\dagger}$	$O_{2\ dist}^{\dagger}$
								$A \leftrightarrow C^{\dagger}$

The symbols used in the above Table represent various constituent "elements" (or limitations in the claims) and are defined thus:

A	Anode
$A \leftrightarrow C^{\dagger}$	Means for coupling anode to cathode
ACt	Anode catalyst
AL	Anodic metallic diffusion layer
C	Cathode
CaA	Catalyst coating disposed on anode face
CaC	Catalyst coating disposed on cathode face
Cat	Catalyst in proximity to membrane electrolyte
CCt	Cathode catalyst
CL	Cathode metallic diffusion layer
$\mathcal{F}$	Source of fuel
$\mathcal{F}^{\dagger}$	Means for providing fuel
Fc	Direct oxidation fuel cell
$Fc^{\dagger}$	Direct oxidation fuel cell means
$\mathcal{F}_{dist}^{\dagger}$	Means for distributing fuel
G	Gas separator
L	Load coupled across fuel cell
M	Membrane electrode assembly
M_{gen}	Generically disclosed membrane electrode assembly
M_c	Membrane electrode assembly including a catalyzed membrane between anode and cathode
Me	Membrane electrolyte
O_2	Source of oxygen
$O_2^{\dagger}$	Means for providing oxygen
$O_{2\ dist}^{\dagger}$	Means for distributing oxyen

It is noted that the number shown in parenthesis next to a symbol, e.g., CL (44), indicates that the element represented by that symbol, CL, appears in the claim, 44, represented by that number. Further, the curly bracket "{" indicates a grouping of elements that comprises an entity. Also, the terminology of "$Fc^{\dagger}$ = M" (see, e.g., under Groups VIII and IX) indicates that a direct oxidation fuel cell means is claimed in terms of a membrane electrode assembly which in turn is constituted from the elements enclosed in the curly bracket referred to above. Moreover, to facilitate comparison, symbols representing the same elements have been placed on the same horizontal level.

Using the above Table as a reference point, contrary to applicants' argument (a), it is evident that the fuel cell system of claims 13-22, i.e. Group I, does not quite describe the fuel cell of claims 1-12, i.e. Group II, since the fuel cell of the former group involves a membrane electrode assembly, M, which has a catalyst coating disposed on the anode and cathode faces (cf. the CaA and CaC limitations), which feature is absent from the corresponding M for the fuel cell belonging to the fuel cell system of the latter group. While Figures 1 and 2A cited by the

applicants do illustrate a fuel cell system and a fuel cell, respectively, nevertheless, these figures are not correlated on a one-to-one basis with the claims of Groups I and II as exemplified by the fact that Figure 2A does not show a catalyst coating (cf. the description at page 11, line 10 of the applicants' own specification). While it is agreed that a fuel cell system "cannot exist without a fuel cell," however, the real issue here is whether or not the particular fuel cell system of Group II requires the specific fuel cell of Group I. Since it has been shown in the foregoing discussion that Group II does not require the fuel cell claimed in Group I, the applicants' argument is deemed to be unpersuasive.

With respect to argument (b), it is seen from the Table that, here too, the fuel cell of Group IV (claims 24-62) involves a different membrane electrode assembly, M, from the one in Group I (claims 1-12) since there is no indication that the anode and cathode catalysts (ACt and CCt) in the former Group play any role in the latter Group. While it is agreed that claim 44 of the elected Group IV recites a cathodic metallic diffusion layer limitation (CL) which is also present in Group I, as stated by applicants and as is apparent from the Table, nevertheless, this line of argument is irrelevant given the difference in the structure of M as described above.

With respect to argument (c), while it is agreed that claims 63-70 of Group V embraces *some* elements recited in claims 24-62 of Group IV, nevertheless there are differences such as (i) there is no element in Group V that corresponds to CL recited in, e.g., claim 44 of Group IV; (ii) the membrane electrode assembly, M_c, of the fuel cell of Group V which includes a catalyzed membrane between the anode and the cathode is different from the membrane electrode assembly, M, of Group IV which recites no such catalyzed membrane; and, last but not least, (iii) such elements as $\mathcal{F}$, O_2, G and Cat (all defined just below the Table above) of Group V are not matched by corresponding elements in Group IV. Therefore, the applicants' argument is unconvincing.

With respect to argument (d), namely, that the [fuel cell of the] fuel cell system of Group VII (claims 93-103) comprises the "same" components as the fuel cell of Group VI (claims 71-92), it is evident that this argument is flawed based on a direct comparison of the presence or absence of various elements in these two groups in the Table above. Thus, such elements as O_2, G and Cat in Group VII are not recited in Group VI and the membrane electrode assembly, M, of Group VI contains specific limitations such as ACt and CCt which fail to find a one-to-one correspondence with the membrane electrode assembly, M_{gen}, of Group VII.

With respect to argument (e), this represents a summation of all of the applicants' previously set forth arguments with respect to claims 1-103. Since each of the applicants' arguments in favour of rejoinder of the Groups embracing these claims has been found deficient, the summation fails to convince. While it is agreed that claims 104-109 of Group VIII are drawn to a fuel cell system which includes a fuel cell, however, that fuel cell, contrary to applicants' arguments, is not the same as the one recited in claim 1 of Group I. Thus, such elements as CaA and CaC of the fuel cell in the latter group are absent from the fuel cell system of the former group, and, such elements as $\mathcal{F}^{\dagger}$, $O_2^{\dagger}$ and $\mathcal{F}_{dist}^{\dagger}$ in Group VIII find no match in Group I. Applicants' argument

that the claims of Group VIII and claim 110 of Group IX are "generic" is without merit because while the use of "means" language which characterizes the claims in these Groups is theoretically open to the inclusion of certain unrecited limitations, however, as pointed out above there still remain elements belonging to one group that are absent from the other one which are evidently not necessarily encompassed by the use of "means" language.

It is observed that, in essence, while there is some overlap in scope across various groups due to the fact that some elements are shared between certain groups, however, the overall situation, as revealed by the Table, is that no two groups are quite alike. Moreover, since the number of individual elements in each group varies from 6 to 9, it is evident that a search and examination of multiple species would pose an undue or serious search burden.

In view of the above discussion, having weighed both the propriety of the species election requirement and the applicants' arguments, the species election requirement is determined to be proper.

The petition is DENIED.

JMStone

Jacqueline M. Stone, Director
Technology Center 1700
Chemical and Materials Engineering

CESARI AND MCKENNA, LLP
88 Black Falcon Avenue
Boston, MA 02210

UNITED STATES PATENT AND TRADEMARK OFFICE

COMMISSIONER FOR PATENTS
UNITED STATES PATENT AND TRADEMARK OFFICE
P.O. BOX 1450
ALEXANDRIA, VA 22313-1450
www.uspto.gov

Paper No. 7

ANTHONY MATULEWICZ
SUITE 1111
200 S. TENTH ST.
McALLEN, TX 78501

COPY MAILED

NOV 19 2004

OFFICE OF PETITIONS

In re Application of
Foltz, et al.
Application No. 09/882,703
Filed: June 14, 2001
For: MINIATURIZED ANTENNA ELEMENT AND ARRAY

DECISION ON PETITION

This is a decision on the petition under 37 CFR 1.137(b), filed October 12, 2004, to revive the above-identified application.

The petition is **DISMISSED**.

Any request for reconsideration of this decision must be submitted within **TWO (2) MONTHS** from mail date of this decision. Extensions of time under 37 CFR 1.136(a) are permitted. The reconsideration request should include a cover letter entitled "Renewed Petition under 37 CFR 1.137(b)." This is not a final agency decision.

This application became abandoned October 14, 2001 for failure to timely submit a proper reply to the Notice to File Corrected Application Papers ("Notice") mailed August 13, 2001. The Notice set a two (2) month shortened statutory period of time for reply. No extensions of time in accordance with 37 CFR 1.136(a) were timely requested. Notice of Abandonment was mailed February 5, 2004.

A grantable petition under 37 CFR 1.137(a) must be accompanied by: (1) the required reply, unless previously filed; (2) the petition fee as set forth in 37 CFR 1.17(l); (3) a showing to the satisfaction of the Commissioner that the entire delay in filing the required reply from the due date for the reply until the filing of a grantable petition pursuant to 37 CFR 1.137(a) was unavoidable; and (4) any terminal disclaimer (and fee as set forth in 37 CFR 1.20(d)) required pursuant to 37 CFR 1.137(c).

The instant petition fails to satisfy item (2) set forth above. Payment of the petition fee is a prerequisite for treatments on

the merits under 37 CFR 1.137(b). The instant petition included $660.00 however the current small entity fee due under 37 CFR 1.137(b)(2) is $685.00. Any renewed petition must include the remaining fees due.

Further correspondence with respect to this matter should be addressed as follows:

By mail:	**Mail Stop Petition** Commissioner for Patents P.O. Box 1450 Alexandria, VA 22313-1450
By facsimile:	(703) 872-9306
By hand delivery or courier service(FedEx, UPS, DHL, etc.):	U.S. Patent and Trademark Office 220 20th Street S. Customer Window, **Mail Stop Petition** Crystal Plaza Two, Lobby, Room 1B03 Arlington, VA 22202

Telephone inquiries concerning this matter may be directed to the undersigned at (571) 272-3205.

Alesia M. Brown
Senior Petitions Attorney
Office of Petitions

UNITED STATES PATENT AND TRADEMARK OFFICE

COMMISSIONER FOR PATENTS
UNITED STATES PATENT AND TRADEMARK OFFICE
P.O. BOX 1450
ALEXANDRIA, VA 22313-1450
www.uspto.gov

COPY MAILED

FEB 18 2005

OFFICE OF PETITIONS

ANTHONY MATULEWICZ
SUITE 1111
200 S. TENTH ST.
McALLEN,TX 78501

In re Application of :
Foltz : DECISION ON PETITION
Application No. 09/882,703 :
Filed: June 14, 2001 :
For: MINIATURIZED ANTENNA :
ELEMENT AND ARRAY

This is a decision on the renewed petition under 37 CFR 1.137(b), filed December 2, 2004, to revive the above-identified application.

The petition is **GRANTED**.

This application became abandoned October 14, 2001 for failure to timely submit a proper reply to the Notice to File Missing Parts of Nonprovisional Application ("Notice") mailed August 13, 2001. The Notice set a two (2) month shortened statutory period of time for reply. No extensions of time in accordance with 37 CFR 1.136(a) were timely requested. Notice of Abandonment was mailed February 5, 2004.

A grantable petition pursuant to 37 C.F.R. § 1.137(b) must be accompanied by: (1) the required reply to the outstanding Office action or notice, unless previously filed; (2) the petition fee as set forth in 37 C.F.R. § 1.17(m); (3) a statement that the entire delay in filing the required reply from the due date for the reply until the filing of a grantable petition pursuant to 37 C.F.R. § 1.137(b) was unintentional; and (4) any terminal disclaimer (and fee set forth in 37 C.F.R. § 1.20(d)) required pursuant to 37 C.F.R. § 1.137(c).

The instant petition has been reviewed and has been found to satisfy the requirements of 37 CFR 1.137(b). Accordingly, the failure to timely reply to the Notice is accepted as having been unintentionally delayed.

The correspondence address contained in the instant petition differs from the correspondence address of record in this application. If petitioner desires to receive future correspondence

at an address other than that currently of record, the appropriate change of correspondence address request must be promptly submitted. A courtesy copy of this decision will be mailed to both addresses. However, all future correspondence will be directed to the address of record until such time as appropriate instructions are received to the contrary.

Telephone inquiries concerning this matter may be directed to the undersigned at (571) 272-3205.

Alesia M. Brown
Petitions Attorney
Office of Petitions

UNITED STATES PATENT AND TRADEMARK OFFICE

Commissioner for Patents
United States Patent and Trademark Office
P.O. Box 1450
Alexandria, VA 22313-1450
www.uspto.gov

ANTHONY MATULEWICZ
MATULEWICZ & ASSOCIATES, P.C.
521 S. BROADWAY ST.
MCALLEN, TX 78539

COPY MAILED
FEB 03 2010

In re Application of
Heinrich Foltz, et al.
Application No. 09/882,703
Filed: June 14, 2001
Attorney Docket No. None

ON PETITION

This is a decision in response to the petition, filed November 13, 2009, to revive the above-identified application under the provisions of 37 CFR 1.137(b).

The petition is dismissed because it lacks the required petition fee pursuant to 37 CFR 1.17(m).

Petitioner submitted a fee of $770; however, the small entity fee required for treatment of a petition under 37 CFR 1.137(b) is $810. It is noted that there is no authorization found in the papers filed November 13, 2009 to charge any fee deficiency. No consideration on the merits can be given to the petition until the $40 balance of the petition fee is received.

Any request for reconsideration of this decision must be submitted within TWO (2) MONTHS from the mail date of this decision. Extensions of time under 37 CFR 1.136(a) are permitted. The reconsideration request should include the $40 petition fee deficiency and a cover letter entitled "Renewed Petition under 37 CFR 1.137(b)." This is **not** a final agency action within the meaning of 5 U.S.C. § 704.

Further correspondence with respect to this matter should be delivered through one of the following mediums:

By mail: Mail Stop PETITIONS
Commissioner for Patents
Post Office Box 1450
Alexandria, VA 22313-1450

By hand: Customer Service Window
Mail Stop Petitions
Randolph Building
401 Dulany Street
Alexandria, VA 22314

By fax: (571) 273-8300
ATTN: Office of Petitions

By Internet: EFS-Web[1]

Any questions concerning this matter may be directed to the undersigned at (571) 272-3204.

Sherry D. Brinkley
Petitions Examiner
Office of Petitions

[1] www.uspto.gov/ebc/efs_help.html (for help using EFS-Web call the Patent Electronic Business Center at (866) 217-9197)

UNITED STATES PATENT AND TRADEMARK OFFICE

Commissioner for Patents
United States Patent and Trademark Office
P.O. Box 1450
Alexandria, VA 22313-1450
www.uspto.gov

ANTHONY MATULEWICZ
MATULEWICZ & ASSOCIATES, P.C.
521 S. BROADWAY ST.
MCALLEN, TX 78539

MAILED

MAY 03 2010

OFFICE OF PETITIONS

In re Application of	:	
Heinrich Roltz, et al.	:	
Application No. 09/882,703	:	DECISION ON PETITION
Filed: June 14, 2001	:	
Attorney Docket No. None	:	

This is a decision on the renewed petition under the unintentional provisions of 37 CFR 1.137(b), filed February 24, 2010, to revive the above-identified application.

The petition is **DISMISSED**.

Any request for reconsideration of this decision must be submitted within TWO (2) MONTHS from the mail date of this decision. Extensions of time under 37 CFR 1.136(a) are permitted. The reconsideration request should include a cover letter entitled "Renewed Petition under 37 CFR 1.137(b)." This is **not** a final agency action within the meaning of 5 U.S.C. § 704.

The application became abandoned on October 13, 2005 for a failure to reply to the non-final Office action mailed July 12, 2005, which set a shortened statutory period for reply of three (3) months. A Notice of Abandonment was subsequently mailed on March 22, 2006. On November 13, 2009, a petition under 37 CFR 1.137(b) was filed; however, the petition was dismissed in a decision mailed February 3, 2010.

A grantable petition under 37 CFR 1.137(b) must be accompanied by: (1) the required reply, unless previously filed; (2) the petition fee as set forth in 37 CFR 1.17(m); (3) a statement that the entire delay in filing the required reply from the due date for the reply until the filing of a grantable petition pursuant to 37 CFR 1.137(b) was unintentional; and (4) any terminal disclaimer (and fee as set forth in 37 CFR 1.20(d)) required by 37 CFR 1.137(d). Where there is a question as to whether either

the abandonment or the delay in filing a petition under 37 CFR 1.137 was unintentional, the Director may require additional information. *See* MPEP 711.03(c)(II)(C) and (D). The instant petition lacks item (3).

There are three periods to be considered during the evaluation of a petition under 37 CFR 1.137(b):

(1) the delay in reply that originally resulted in the abandonment;

(2) the delay in filing an initial petition pursuant to 37 CFR 1.137(b) to revive the application; and

(3) the delay in filing a grantable petition pursuant to 37 CFR 1.137(b) to revive the application.

Currently, the delay has not been shown to the satisfaction of the Director to be unintentional for periods (1) and (2).

As to Period (1):

The patent statute at 35 U.S.C. § 41(a)(7) authorizes the Director to revive an "unintentionally abandoned application." The legislative history of Public Law 97-247 reveals that the purpose of 35 U.S.C. § 41(a)(7) is to permit the Office to have more discretion than in 35 U.S.C. §§ 133 or 151 to revive abandoned applications in appropriate circumstances, but places a limit on this discretion, stating that "[u]nder this section a petition accompanied by either a fee of $500 or a fee of $50 **would not be granted where the abandonment** or the failure to pay the fee for issuing the patent **was intentional** as opposed to being unintentional or unavoidable." [emphasis added]. See H.R. Rep. No. 542, 97th Cong., 2d Sess. 6-7 (1982), *reprinted in* 1982 U.S.C.C.A.N. 770-71. The revival of an intentionally abandoned application is antithetical to the meaning and intent of the statute and regulation.

35 U.S.C. § 41(a)(7) authorizes the Director to accept a petition "for the revival of an unintentionally abandoned application for a patent." As amended December 1, 1997, 37 CFR 1.137(b)(3) provides that a petition under 37 CFR 1.137(b) must be accompanied by a statement that the delay was unintentional, but provides that "[t]he Commissioner may require additional information where there is a question whether the delay was unintentional." Where, as here, there is a question whether the

initial delay was unintentional, the petitioner must meet the burden of establishing that the delay was unintentional within the meaning of 35 U.S.C. § 41(a)(7) and 37 CFR 1.137(b). *See* In re Application of G, 11 USPQ2d 1378, 1380 (Comm'r Pats. 1989); 37 CFR 1.137(b). Here, in view of the inordinate delay (over 4 years) in resuming prosecution, there is a question whether the entire delay was unintentional. Petitioner should note that the issue is not whether some of the delay was unintentional by any party; rather, the issue is whether the entire delay has been shown to the satisfaction of the Director to be unintentional.

The question under 37 CFR 1.137(b) for period (1) is whether the delay on the part of the party having the right or authority to reply to avoid abandonment (or not reply) was unintentional. Accordingly, any renewed petition must clearly identify the party having the right to reply to avoid abandonment on October 13, 2005. That party, in turn must explain what effort(s) was made to further reply to the outstanding Office action and, further, why no reply was filed. If no effort was made to further reply, then that party must explain why the delay in this application does not result from a deliberate course of action (or inaction). Likewise, as Anthony Matulewicz was counsel of record at the time of abandonment, he should explain why this application became abandoned while it was under his control and what efforts made to further reply of itself and with whom this matter was discussed. Copies of any correspondence relating to the filing, or to not filing a further reply to the outstanding Office action are required from the responsible person(s) involved with this application at the time of abandonment. Statements are required from any and all responsible person(s) having firsthand knowledge of the circumstances surrounding the lack of a reply to the outstanding Office action. As the courts have made clear, it is pointless for the USPTO to revive a long abandoned application without an adequate showing that the delay did not result from a deliberate course of action. *See* Lawman Armor v. Simon, 2005 U.S. Dist. LEXIS 10843, 74 USPQ2d 1633 (DC EMich 2005); Field Hybrids, LLC v. Toyota Motor Corp., 2005 U.S. Dist. LEXIS 1159 (D. Minn Jan. 27, 2005); Lumenyte Int'l Corp. v. Cable Lite Corp., Nos. 96-1011, 96-1077, 1996 U.S. App. LEXIS 16400, 1996 WL 383927 (Fed. Cir. July 9, 1996) (unpublished) (patents held unenforceable due to a finding of inequitable conduct in submitting an inappropriate statement that the abandonment was unintentional).

As to Period (2):

Likewise, where the applicant deliberately chooses not to seek or persist in seeking the revival of an abandoned application, or where the applicant deliberately chooses to delay seeking the revival of an abandoned application, the resulting delay in seeking revival of the abandoned application cannot be considered as "unintentional" within the meaning of 37 CFR 1.137(b). *See* MPEP 711.03(c).

The language of both 35 U.S.C. § 41(a)(7) and 37 CFR 1.137(b) are clear and unambiguous, and, furthermore, without qualification. That is, the delay in filing the reply during prosecution, as well as in filing the petition seeking revival, must have been, without qualification, "unintentional" for the reply to now be accepted on petition. The Office requires that the entire delay be at least unintentional as a prerequisite to revival of an abandoned application to prevent abuse and injury to the public. *See* H.R. Rep. No. 542, 97th Cong., 2d Sess. 7 (1982), reprinted in 1982 U.S.C.C.A.N. 771 ("[i]n order to prevent abuse and injury to the public the Commissioner . . . could require applicants to act promptly after becoming aware of the abandonment"). The December 1997 change to 37 CFR 1.137 did not create any new right to overcome an intentional delay in seeking revival, or in renewing an attempt at seeking revival, of an abandoned application. *See* Changes to Patent Practice and Procedure; Final Rule Notice, 62 Fed. Reg. 53131, 53160 (October 10, 1997), 1203 Off. Gaz. Pat. Office 63, 87 (October 21, 1997), which clearly stated that any protracted delay (here, over 4 years) could trigger, as here, a request for additional information. As the courts have since made clear, a protracted delay in seeking revival, as here, requires a petitioner's detailed explanation seeking to excuse the delay as opposed to USPTO acceptance of a general allegation of unintentional delay. *See* Lawman Armor v. Simon, 2005 U.S. Dist. LEXIS 10843, 74 USPQ2d 1633, at 1637-8 (DC EMich 2005); Field Hybrids, LLC v. Toyota Motor Corp., 2005 U.S. Dist. LEXIS 1159 (D. Minn Jan. 27, 2005) at *21-*23. Statements are required from any and all responsible person(s) having firsthand knowledge of the circumstances surrounding the protracted delay, after the abandonment date, in seeking revival.

As noted in MPEP 711.03(c)(II), subsection D, in instances in which such petition was not filed within 1 year of the date of abandonment of the application, applicants should include:

(A) the date that the applicant first became aware of the abandonment of the application; and
(B) a showing as to how the delay in discovering the abandoned status of the application occurred despite the exercise of due care or diligence on the part of the applicant.

In either instance, applicant's failure to carry the burden of proof to establish that the "entire" delay was "unavoidable" or "unintentional" may lead to the denial of a petition under 37 CFR 1.137(b), regardless of the circumstances that originally resulted in the abandonment of the application. *See also* New York University v. Autodesk, 2007 U.S. DIST LEXIS, U.S.District LEXIS 50832, *10 -*12 (S.D.N.Y. 2007)(protracted delay in seeking revival undercuts assertion of unintentional delay).

Any renewed petition with respect to this matter may be delivered through one of the following mediums:

By mail: Mail Stop PETITIONS
Commissioner for Patents
Post Office Box 1450
Alexandria, VA 22313-1450

By hand: Customer Service Window
Mail Stop Petitions
Randolph Building
401 Dulany Street
Alexandria, VA 22314

By fax: (571) 273-8300
ATTN: Office of Petitions

By internet: EFS-Web[1]

Any questions concerning this matter may be directed to the undersigned at (571) 272-3204.

Sherry D. Brinkley
Petitions Examiner
Office of Petitions

[1] www.uspto.gov/ebc/efs help.html (for help using EFS-Web call the Patent Electronic Business Center at (866) 217-9197)

#4

UNITED STATES PATENT AND TRADEMARK OFFICE

COMMISSIONER FOR PATENTS
UNITED STATES PATENT AND TRADEMARK OFFICE
P.O. BOX 1450
ALEXANDRIA, VA 22313-1450
www.uspto.gov

RECEIVED

NOV 06 2003

DIRECTOR OFFICE
TECHNOLOGY CENTER 2100

Paper No. 4

KILPATRICK STOCKTON LLP
3737 Glenwood Avenue
Suite 400
Raleigh, NC 27612

In re Application of Michael W. BEZERA, et al Application No. 09/882,707 Filed: June 15, 2001 For: HIERARCHICAL RECOVERY METHOD FOR FIBRE-CHANNEL DEVICES	DECISION ON REQUEST FOR WITHDRAWAL AS ATTORNEY

This is a decision on the Request To Withdraw from Representation filed October 17, 2003.

A grantable request to withdraw as attorney of record should indicate thereon the present mailing addresses of the attorney(s) who is/are withdrawing from the record and of the applicant. The request for withdrawal must be signed by every attorney seeking to withdraw or contain a clear indication that one attorney is signing on behalf of another/others. A request to withdraw will not be approved unless at least 30 (thirty) days would remain between the date of approval and the later of the expiration date of a time to file a response or the expiration date of the maximum time period which can be extended under 37 C.F.R. § 1. 136(a). The effective date of withdrawal being the date of decision and not the date of request. See M.P.E.P. § 402.06. 37 C.F.R. § 1.36 further requires that the applicant or patent owner be notified of the withdrawal of the attorney or agent.

The request is **GRANTED**.

All future communication from the Office will be continue to be directed to the above-listed address until otherwise notified by applicant. This correspondence address is provided by the withdrawn attorney(s). Applicant is reminded of the obligation to promptly notify the U.S. Patent and Trademark Office (the Office) of any change in correspondence address to ensure receipt of all communications from the Office.

For Vincent N. Trans
Special Programs Examiner
Technology Center 2100
Computer Architecture, Software and Information Security
(703) 305-9750

UNITED STATES PATENT AND TRADEMARK OFFICE

Commissioner for Patents
United States Patent and Trademark Office
P.O. Box 1450
Alexandria, VA 22313-1450
www.uspto.gov

MAILED
FROM DIRECTORS OFFICE

OCT 19 2004

TECHNOLOGY CENTER 3600

WAGNER, MURABITO, & HAO LLP
Third Floor
Two North Market Street
San Jose, CA 95113

In re application of
Mohan Sankaran et al.
Application No. 09/882,733 : DECISION ON REQUEST
Filed: June 15, 2001 : FOR WITHDRAWAL OF
For: METHOD AND SYSTEM FOR : ATTORNEY
PROVIDING TRANSFER OF
ANALYTIC APPLICATION DATA
OVER A NETWORK

This is a decision on the request filed on September 15, 2004, under 37 CFR 1.36 and MPEP 402.06, requesting permission to withdraw as the attorney of record in the above-identified application.

The request is **NOT APPROVED**.

Under 37 CFR 1.36 an attorney may withdraw only upon application to and approval by the Commissioner. It should be noted that a withdrawal is effective when approved, not when filed. For approval of such a request the following conditions must be met:

A) Each attorney of record must sign the notice of withdrawal, or the notice must contain a clear indication of one attorney signing on behalf of another, because the Office does not recognize law firms;
B) There must be at least 30 days between approval of the withdrawal and the later of the expiration date of a time period for reply or the expiration date of the period which can be obtained by a petition and fee for extension of time under 37 CFR 1.136(a);
C) A proper reason for the withdrawal as enumerated in 37 CFR 10.40(b) or subsection (1)-(6) of 37 CFR 10.40(c) must be provided;
D) The applicant or patent owner must have been notified of the withdrawal as provided for in 37 CFR 1.36.

09/882,733

The request to withdraw as attorney is not accepted in the above-identified application because the request lacks condition A) above.

As to condition A) The attorneys listed as being withdrawn do not match those appointed in Customer No. 41066. Therefore, some attorneys originally appointed would still be of record if the request were approved. It does not appear that that is the intent of the request. If only certain attorneys are withdrawing, then it must be so stated. Since the original attorneys were not given power by a customer number, and attorneys associated with a firm change over time, it is suggested that any renewed request simply state that the request is being made on behalf of all attorneys of record.

Kenneth J. Dorner
Special Programs Examiner
Patent Technology Center 3600
(703) 308-0866
Facsimile No.: (703) 605-0586

KJD/slb:10/13/04

UNITED STATES PATENT AND TRADEMARK OFFICE

Commissioner for Patents
United States Patent and Trademark Office
Washington, D.C. 20231
www.uspto.gov
DIW 12-01

Paper No. 4

SHIH-JONG J. LEE
15418 SE 53RD PLACE
BELLEVUE, WA 98006

COPY MAILED

JAN 04 2002

OFFICE OF PETITIONS

In re Application of	:	
Lee et al.	:	
Application No. 09/882,734	:	ON PETITION
Filed: 13 June, 2001	:	
Attorney's Docket No. SV14	:	

This is a decision on the petition filed on 23 August, 2001, requesting that the above-identified application be accorded a filing date of 13 June, 2001, with Page 29 of the specification as a part of the original disclosure.

The petition is granted.

The application was filed on 13 June, 2001. However, on 14 August, 2001, Initial Patent Examination Division mailed a "Notice" stating, *inter alia*, that the application had been accorded a filing date but that Page 29 of the specification (description and claims) appeared to have been omitted.

In response, on 23 August, 2001, Page 29 of the specification, and the present petition were filed. Petitioners argue that Page 29 was filed with the other application papers on 13 June, 2001, but were subsequently misplaced in the U.S. Patent and Trademark Office (Office). In support, a copy of petitioners' postcard receipt was supplied on 23 August, 2001. The postcard receipt shows an Office date stamp of 13 June, 2001, and the above-identified application number, and identifies the application by the first named's last name and invention title, and acknowledges receipt of, *inter alia*, 33 pages of specification. Petitioners request that the application, including Page 29 of the specification, be accorded a filing date of 13 June, 2001.

A review of the record reveals that no Page 29 of the specification has been located among the application papers

deposited on 13 June, 2001. However, the evidence is convincing that the application papers deposited on 13 June, 2001, included Page 29 of the specification, which were subsequently misplaced in the Office. Therefore, the application, including Page 29 of the specification, is entitled to a filing date of 13 June, 2001.

The "Notice" mailed on 14 August, 2001, is vacated.

In view of the above, the petition is granted. No petition fee has been charged and none is due.

The application will be processed and examined using the copies of Page 29 supplied on 23 August, 2001.

For future reference, applicants are reminded that any paper filed in an application naming joint inventors where no power of attorney has been filed must be signed by all joint inventors. Joint inventors Shih-Jong J. Lee and Seho Oh are named in this application. Therefore, unless a power of attorney is filed in the application all future papers filed by applicants must show the signatures of both inventors.

The application is being returned to Initial Patent Examination Division for further processing with a filing date of 13 June, 2001, using the application papers filed on 13 June, 2001, and the copies of Pages 29 supplied on 23 August, 2001.

Telephone inquires should be directed to Petitions Attorney Douglas I. Wood at 703 308-6918.

Beverly M. Flanagan
Supervisory Petitions Attorney
Office of Petitions
Office of the Deputy Commissioner
for Patent Examination Policy

UNITED STATES PATENT AND TRADEMARK OFFICE

COMMISSIONER FOR PATENTS
UNITED STATES PATENT AND TRADEMARK OFFICE
P.O. BOX 1450
ALEXANDRIA, VA 22313-1450
www.uspto.gov

DANIEL S. EBENSTEIN
AMSTER, ROTHSTEIN & EBENSTEIN
90 PARK AVENUE
NEW YORK, NY 10016

COPY MAILED

JAN 1 1 2006

OFFICE OF PETITIONS

In re Application of
Spencer Cramer, et al.
Application No. 09/882,739
Filed: June 15, 2001
Attorney Docket No.: 31906/5

ON PETITION

This is a decision on the petition, filed January 4, 2006, under 37 CFR 1.313(c)(2) to withdraw the above-identified application from issue after payment of the issue fee.

The petition is **GRANTED**.

The above-identified application is withdrawn from issue for consideration of a submission under 37 CFR 1.114 (request for continued examination). See 37 CFR 1.313(c)(2).

Petitioner is advised that the issue fee paid on October 6, 2005, in the above-identified application, cannot be refunded. If, however, the above-identified application is again allowed, petitioner may request that it be applied towards the issue fee required by the new Notice of Allowance.[1]

Telephone inquiries relating to this decision should be directed to the undersigned at (571) 272-3204.

The application is being referred to Technology Center AU 2145 for further processing of the request for continued examination under 37 CFR 1.114.

Sherry D. Brinkley
Petitions Examiner
Office of Petitions

[1]The request to apply the issue fee to the new Notice may be satisfied by completing and returning the new Issue Fee Transmittal Form PTOL-85(b), which includes the following language thereon: " Commissioner for Patents is requested to apply the Issue Fee and Publication Fee (if any) or re-apply any previously paid issue fee to the application identified above." Petitioner is advised that, whether a fee is indicated as being due or not, the Issue Fee Transmittal Form **must** be completed and timely submitted to avoid abandonment. Note the language in bold text on the first page of the Notice of Allowance and Fee(s) Due (PTOL-85).

UNITED STATES PATENT AND TRADEMARK OFFICE

COMMISSIONER FOR PATENTS
UNITED STATES PATENT AND TRADEMARK OFFICE
WASHINGTON, D.C. 20231
www.uspto.gov

Paper No. 6

COPY MAILED

JAN 1 1 2002

OFFICE OF PETITIONS

Tope-McKay & Associates
23852 Pacific Coast Highway #311
Malibu, CA 90265

In re Application of
Ottusch, *et al.*
Application No. 09/882,817
Filed: June 15, 2001
Attorney Docket Number: HRL053

DECISION REFUSING STATUS
UNDER 37 C.F.R. §1.47(a)

This is in response to the November 14, 2001 petition Under 37 C.F.R. §1.47(a).

HISTORY

Applicant filed the above-identified application on July 10, 2001, naming John Jacob Ottusch, Stephen M. Wandzura, Harry F. Contopanagos, John L. Visher, and Vladimir Rokhlin as joint inventors. However, the application as filed did not include the declaration executed as required by 37 C.F.R. §1.53.

Accordingly, on August 13, 2001, the Office of Initial Patent Examination mailed a notice to file missing parts (hereinafter "the notice") to the address of record. A two month extendable deadline was set for filing a reply.

Petitioner filed this reply on November 14, 2001, which under 37 C.F.R. §§1.6, 1.7, & 1.8, was timely.

LAW

§ 1.47 Filing when an inventor refuses to sign or cannot be reached.

> (a) If a joint inventor refuses to join in an application for patent or cannot be found or reached after diligent effort, the application may be made by the other inventor on behalf of himself or herself and the nonsigning inventor. The oath or declaration in such an application must be accompanied by a petition including proof of the pertinent facts, the fee set forth in §1.17(l) and the last known address of the nonsigning inventor. The Patent and Trademark Office shall, except in a continued prosecution application under §1.53(d), forward notice of the filing of the application to the nonsigning inventor at said address and publish notice of the filing of the application in the Official Gazette. The nonsigning inventor may subsequently join in the application on filing an oath or declaration complying with §1.63.

ANALYSIS

Petitioner correctly points out that among the requirements for a grantable petition is the requirement that the declaration be accompanied by the last known address of the nonsigning inventor.[1] No designation of the last known address has been made with this petition. The petition indicates that the address is entered in the declaration. However, no address is given for the nonsignor Contopanagos in the declaration. Petitioner is urged

[1] Petition under 37 C.F.R.§1.47, page 2, last paragraph.

to consider that for rule 47 purposes, the last known address is the one at which the non-signing inventor customarily receives mail.[2] Ordinarily, that address is the non-signing inventor's residential address.[3]

Petitioner has also failed to demonstrate that the nonsigning inventor has been provided with an opportunity to review the application and sign the required declaration. It is simply alleged that several contacts have been made with Mr. Contopanagos to secure his cooperation. No supporting evidence has been provided to corroborate these allegations. Petitioner is advised to consult the M.P.E.P. §409.03(d) for further information on what kind of showing is required to prove that the nonsigning inventor has refused to sign the declaration.

Because of the foregoing, this petition is *dismissed.*

Any request for reconsideration of this decision must be submitted within TWO (2) MONTHS from the mail date of this decision. Extensions of time under 37 C.F.R. §1.136(a) are permitted. The reconsideration request should include a cover letter entitled "Renewed Petition under 37 C.F.R. §1.47(a)".

Further correspondence with respect to this matter should be addressed as follows:

By mail: Assistant Commissioner for Patents
Box DAC
Washington, D.C. 20231

By FAX: (703) 308-6916
Attn: Special Program Law Office

By hand: Crystal Plaza Four, Suite 3C23
2201 S. Clark Place
Arlington, VA

Telephone inquiries related to this decision should be directed to the undersigned at (703) 306-5593.

Scott M. Ledford
Petitions Attorney
Office of Petitions
Office of the Deputy Assistant Commissioner
for Patent Policy and Projects

[2] M.P.E.P. §409.03(e)

[3] *Id.*

UNITED STATES PATENT AND TRADEMARK OFFICE

COMMISSIONER FOR PATENTS
UNITED STATES PATENT AND TRADEMARK OFFICE
WASHINGTON, D.C. 20231
www.uspto.gov

Paper No. 10

Tope-McKay & Associates
23852 Pacific Coast Highway #311
Malibu CA 90265

COPY MAILED

JAN 2 4 2003

OFFICE OF PETITIONS

In re Application of
Ottusch, Wandzura, Contopanagos, Visher, and Rokhlin :
Application No. 09/882,817 : DECISION ON PETITION
Filed: June 15, 2001 :
Attorney Docket No.HRL053

This is a decision on the petition under 37 CFR 1.181(a) to withdraw the holding of abandonment filed November 4, 2002. This is also a decision on the renewed petition under 37 CFR 1.47(a) filed November 11, 2002 (certificate of mailing dated March 11, 2002.

The petition under 37 CFR 1.181(a) is GRANTED.

The renewed petition under 37 CFR 1.47(a) is DISMISSED.

TREATMENT UNDER 37 CFR 1.181(a)

This application was held abandoned on February 12, 2002, because it was believed that the no response was received to the decision of January 11, 2002, dismissing the petition under 37 CFR 1.47(a) filed November 14, 2001. Petitioner was advised of the above-cited application's abandonment by a Notice of Abandonment mailed September 19, 2002.

Petitioner maintains that a timely response was mailed to the decision of January 11, 2002, and filed a copy of the response along with a certificate of mailing dated March 11, 2002. Based on the facts as stated in the instant petition, and the corroborative evidence provided, it is concluded that the holding of abandonment was improperly imposed; the holding of abandonment is, therefore, withdrawn as of the mailing date of this decision. There is no fee associated with the petition to withdraw the holding of abandonment.

TREATMENT UNDER 37 CFR 1.47(a)

The petition under 37 CFR 1.47(a) is **dismissed.**

Any request for reconsideration under this decision must be submitted within TWO (2) MONTHS from the mail date of this decision. Extensions of time under 37 CFR 1.136(a) are permitted. Failure to respond will result in the abandonment of this reissue application. Any response should be titled "Request for Reconsideration of Petition Under 37 CFR 1.47(a).

The above-identified application was filed on June 15, 2001, without an executed oath or declaration. A "Notice to File Missing Parts of Nonprovisional Application"(the "Notice") was mailed on August 13, 2001, requiring an executed oath or declaration and a surcharge for the late filing of the oath or declaration. On November 14, 2001, in response to the Notice, petitioner filed a petition under 37 CFR 1.47(a) that was dismissed by a decision mailed January 11, 2002. On November 4, 2002 (certificate of mailing dated March 11, 2002), petitioner filed a communication that is being treated as a renewed petition under 37 CFR 1.47(a) and a declaration executed by inventor Contopanagos.

A grantable petition under 37 CFR 1.47(a) requires:

(1) proof that the non-signing inventor(s) cannot be reached or refuses to sign the oath or declaration after having been presented with the application papers (specification, claims, and drawings);

(2) an acceptable oath or declaration in compliance with 35 U.S.C. §§ 115 and 116;

(3) the petition fee,

(4) a statement of the last known address of the non-signing inventor,

The instant petition lacks item (2) as set forth above.

The declaration filed is not acceptable because it only lists the name of inventor Contopanagos, which, according to the language of the declaration itself, would imply that inventor Contopanagos is the sole inventor named in the application. Title 37, Section 1.63 of the Code of Federal regulations provides, in pertinent part, that "(a) [a]n oath or declaration filed under 1.51(b)(2) as a part of a nonprovisional application must: (2) Identify each inventor by full name . . ." The declaration filed for inventor Contopanagos only list his name. With any renewed petition filed, a declaration must be filed that is executed by inventor Contopanagos and lists the names of all joint inventors. Petitioner is advised to consult 37 CFR 1.63 for other nuances relative to a proper oath or declaration.

Petitioner is advised that Scott Ledford, Petitions Attorney, is no longer employed by the Patent and Trademark Office. Petitioner should, therefore, address any further questions relative to this petition to the undersigned at (703) 305-0010.

Further correspondence with respect to this matter should be addressed as follows:

By mail: Commissioner for Patents
Box DAC
Washington, DC 20231

By FAX: (703) 308-6916
Attn: Office of Petitions

By hand: Crystal Plaza Four, Suite 3C23
2201 South Clark Place
Arlington, Virginia

Kenya A. McLaughlin

Kenya A. McLaughlin
Petitions Attorney
Office of Petitions
Office of the Deputy Commissioner
for Patent Examination Policy

UNITED STATES PATENT AND TRADEMARK OFFICE

COMMISSIONER FOR PATENTS
UNITED STATES PATENT AND TRADEMARK OFFICE
WASHINGTON, D.C. 20231
www.uspto.gov

Paper No. 13

Tope-McKay & Associates
23852 Pacific Coast Highway #311
Malibu, CA 90265

COPY MAILED

MAR 1 9 2003

OFFICE OF PETITIONS

In re Application of :
Ottusch, Wandzura, Cotopangos, and Visher :
Application No. 09/882,817 :
Filed: June 15, 2001 : DECISION ON PETITION
Attorney Docket No. HRL053 :
Invention: METHOD AND APPARATUS FOR MODELING THREE-DIMENSIONAL ELECTROMAGNETIC SCATTERING FROM ARBITRARILY SHAPED THREE-DIMENSIONAL OBJECTS

This is in response to the renewed petition under 37 CFR 1.47(a), filed March 18, 2003

The renewed petition under 37 CFR 1.47(a) is **MOOT**.

The instant renewed petition was filed in response to a decision dismissing the first petition under 37 CFR 1.47(a). The decision was mailed on January 24, 2003, and allowed a two month period for filing a renewed petition. The instant renewed petition was then filed on March 18, 2003, with a proper declaration for inventor Contopanagos.

As a properly executed declaration had been filed for all named inventors, there is no remedy that could be provided by a petition under 37 CFR 1.47. The renewed petition under 37 CFR 1.47(a) is, therefore, rendered moot.

This application will be forwarded to the Office of Initial Patent Examination for further processing.

Telephone inquiries should be directed to the undersigned at (703) 305-0010.

Kenya A. McLaughlin
Petitions Attorney
Office of Petitions

UNITED STATES PATENT AND TRADEMARK OFFICE

COMMISSIONER FOR PATENTS
UNITED STATES PATENT AND TRADEMARK OFFICE
WASHINGTON, D.C. 20231
www.uspto.gov

Paper No. 4

KENNETH I KOHN
KOHN & ASSOCIATES
30500 NORTHWESTERN HWY
SUITE 410
FARMINGTON HILLS, MI 48334

COPY MAILED

NOV 1 5 2001

OFFICE OF PETITIONS

In re Application of :
Dwight L. Adamic et al : DECISION DISMISSING
Application No. 09/882,825 : PETITION
Filed: June 16, 2001 :
Attorney Docket No. 0247.00006 :

This is a decision on the paper styled "Request For Corrected Filing Receipt" filed September 14, 2001, requesting that the above-identified application be accorded a filing date of June 15, 2001, rather than the presently accorded filing date of June 16, 2001. The petition is properly treated as a petition under 37 CFR 1.10(d).

Applicants request the earlier filing date on the basis that the application was purportedly deposited in Express Mail service on June 15, 2001, pursuant to the requirements of 37 CFR 1.10. Applicants acknowledge that the date of deposit in Express Mail shown on applicants' Express Mail receipt is June 16, 2001, but argue that the application was actually deposited with the United States Postal Service (USPS) as Express Mail on June 15, 2001.

Paragraph (a) of 37 CFR 1.10 states that:

> Any correspondence received by the Patent and Trademark Office (Office) that was delivered by the "Express Mail Post Office to Addressee" service of the United States Postal Service (USPS) will be considered filed in the Office on the date of deposit with the USPS. <u>The date of deposit with the USPS is shown by the "date-in" on the "Express Mail" mailing label or other official USPS notation</u>. If the USPS deposit date cannot be determined, the correspondence will be accorded the Office receipt date as the filing date. See §1.6(a). (Emphasis supplied)

Paragraph (d) of 37 CFR 1.10 states that:

Any person filing correspondence under this section that was received by the Office and delivered by the "Express Mail Post Office to Addressee" service of the USPS, who can show that the "date-in" on the "Express Mail" mailing label or other official notation entered by the USPS was incorrectly entered or omitted by the USPS, may petition the Commissioner to accord the correspondence a filing date as of the date the correspondence is shown to have been deposited with the USPS, provided that:

(1) The petition is filed promptly after the person becomes aware that the Office has accorded, or will accord, a filing date based upon an incorrect entry by the USPS;

(2) The number of the "Express Mail" mailing label was placed on the paper(s) or fee(s) that constitute the correspondence prior to the original mailing by "Express Mail"; and

(3) The petition includes a showing which establishes, to the satisfaction of the Commissioner, that the requested filing date was the date the correspondence was deposited in "Express Mail Post Office to Addressee" service prior to the last scheduled pickup for that day. Any showing pursuant to this paragraph must be corroborated by evidence from the USPS or that came into being after deposit and within one business day of the deposit of the correspondence in the "Express Mail Post Office to Addressee" service of the USPS.

A grantable petition under 37 CFR 1.10(d) must include "a showing which establishes, to the satisfaction of the Commissioner, that the requested filing date was the date the correspondence was deposited in 'Express Mail Post Office to Addressee' service prior to the last scheduled pickup for that day." In addition, the showing "must be corroborated by evidence from the USPS or that came into being after deposit and within one business day of the deposit of the correspondence in the 'Express Mail Post Office to Addressee' service of the USPS." Evidence from the USPS may be the Express Mail Corporate Account Mailing Statement. Evidence that came into being within one day after the deposit of the correspondence as Express Mail may be in the form of a log book which contains information such the place, date and time of deposit; the time of the last scheduled pick-up for that date and place of deposit; the depositor's initials or signature; and the date and time of entry in the log.

The petition fails to include "a showing which establishes, to the satisfaction of the Commissioner, that the requested filing date was the date the correspondence was deposited in the 'Express Mail Post Office to Addressee' service prior to the last scheduled pickup for that day" as required by 37 CFR 1.10(d). Accordingly, the petition is dismissed.

Applicants attention is directed to 37 CFR 1.10(d), which states, in part, that:

> Correspondence should be deposited directly with an employee of the USPS to ensure that the person depositing the correspondence receives a legible copy of the "Express Mail" mailing label with the "date-in" clearly marked. Persons dealing indirectly with the employees of the USPS (such as by deposit in an "Express Mail" drop box) do so at the risk of not receiving a copy of the "Express Mail" mailing label with the desired "date-in" clearly marked.

It is unfortunate that applicants chose to deposit a paper as important as a patent application in Express Mail without immediately obtaining an Express Mail receipt showing the desired date of deposit.

Any request for reconsideration of this decision should be filed within **TWO MONTHS** of the date of this decision in order to be considered timely (see 37 CFR 1.181(f)) and should be addressed as follows:

By mail: Assistant Commissioner for Patents
Box DAC
Washington, D.C. 20231

By facsimile: (703) 308-6916
Attn: Office of Petitions

By hand: Office of Petitions
2201 South Clark Place
Crystal Plaza 4, Suite 3C23
Arlington, VA 22202

The application is being returned to Technology Center AU 3671 with the presently accorded filing date of June 16, 2001.

Telephone inquires specific to this matter should be directed to Wan Laymon at (703) 306-5685.

Sherry Brinkley
Petitions Examiner
Office of Petitions
Office of the Deputy Commissioner
for Patent Examination Policy

UNITED STATES PATENT AND TRADEMARK OFFICE

COMMISSIONER FOR PATENTS
UNITED STATES PATENT AND TRADEMARK OFFICE
P.O. BOX 1450
ALEXANDRIA, VA 22313-1450
www.uspto.gov

STEVEN P. SCHAD
ESCO CORPORATION
2141 NW 25TH AVENUE
PO BOX 10123
PORTLAND, OR 97210

COPY MAILED
AUG 24 2006
OFFICE OF PETITIONS

In re Patent No. 6,959,506	:	
Issue Date: November 1, 2005	:	
Application No. 09/882,825	:	NOTICE
Filed: June 16, 2001	:	
Patentee: Dwight L. Adamic, et al.		

This is a notice regarding your request for acceptance of a fee deficiency submission under 37 CFR 1.28. On September 1, 1998, the Court of Appeals for the Federal Circuit held that 37 CFR 1.28(c) is the sole provision governing the time for correction of the erroneous payment of the issue fee as a small entity. **See DH Technology v. Synergystex International, Inc. 154 F.3d 1333, 47 USPQ2d 1865 (Fed. Cir. Sept. 1, 1998).**

The Office no longer investigates or rejects original or reissue applications under 37 CFR 1.56. **1098 Off. Gaz. Pat. Office 502 (January 3, 1989)**. Therefore, nothing in this Notice is intended to imply that an investigation was done.

Your fee deficiency submission under 37 CFR 1.28 is hereby **ACCEPTED**.

There is no indication that the person signing the instant petition was ever given a power of attorney or authorization of agent to prosecute the above-identified application. However, in accordance with 37 CFR 1.34(a), the signature of Steven P. Schad appearing on the petition shall constitute a representation to the United States Patent and Trademark Office that he is authorized to represent the particular party on whose behalf he acts.

Inquiries related to this communication should be directed to the Office of Petitions Staff at (571) 272-3201.

Sherry D. Brinkley
Petitions Examiner
Office of Petitions

UNITED STATES PATENT AND TRADEMARK OFFICE

Commissioner for Patents
United States Patent and Trademark Office
P.O. Box 1450
Alexandria, VA 22313-1450
www.uspto.gov

Paper No.

JOHN S. PRATT, ESQ
KILPATRICK STOCKTON, LLP
1100 PEACHTREE STREET
ATLANTA, GA 30309

COPY MAILED

AUG 1 1 2004

OFFICE OF PETITIONS

In re Application of :
Oakey et al. :
Application No. 09/882,849 : DECISION ON PETITION
Filed: June 15, 2001 :
Attorney Docket No. I4060/260090 :

This is a decision on the petition filed July 23, 2004, pursuant to 37 CFR 1.137(b), to revive the above-identified application.

The petition is **GRANTED**.

The above-identified application became abandoned for failure to timely file a proper reply to the final Office action mailed November 4, 2003. This Office action set forth a shortened statutory period for reply of three (3) months, with extensions of time obtainable under § 1.136(a). On May 6, 2004 (certificate of mailing May 3, 2004), applicants filed an amendment, made timely by an accompanying petition for extension for response within the third month. However, this amendment was determined by the examiner not to place the application in condition for allowance (Advisory Action mailed June 17, 2004). The present petition precedes the mailing of a Notice of Abandonment.

With the instant petition, petitioner filed a Request for Continued Examination (RCE) under 37 CFR 1.114, including a submission and payment of the RCE fee. The RCE has been accepted as the required reply under 37 CFR 1.137(b)(1). Petitioner has met all other requirements for a grantable petition under 37 CFR 1.137(b).

Technology Center AU 3637 has been advised of this decision. The RCE and submission under § 1.114 will be considered in due course.

Telephone inquiries specific to this decision should be directed to the undersigned at (703) 305-0309.

Nancy Johnson
Senior Petitions Attorney
Office of Petitions

Abstract of the Invention

Disclosed is an osteogenic device capable of inducing the formation of endochondral bone in a shape conforming substantially to the shape of the device when implanted in a mammalian host. The device includes an osteogenic protein dispersed within a porous matrix comprising a polymer of collagen and glycosaminoglycan cross-linked to an M_C value of about 800 to about 60,000. Also disclosed are a method of inducing mammalian bone growth, and a method of inducing conductive bone growth from viable mammalian bone.

FEB 0 5 2002
PATENT & TRADEMARK OFFICE
COPY OF PAPERS ORIGINALLY FILED

UNITED STATES PATENT AND TRADEMARK OFFICE

COMMISSIONER FOR PATENTS
UNITED STATES PATENT AND TRADEMARK OFFICE
WASHINGTON, D.C. 20231
www.uspto.gov

APPLICATION NUMBER	FILING/RECEIPT DATE	FIRST NAMED APPLICANT	ATTORNEY DOCKET NUMBER
09/882,945	06/15/2001	Victor Lyamichev	FORS-4586

CONFIRMATION NO. 9139

FORMALITIES LETTER

OC000000006315417

MEDLEN & CARROLL, LLP
Suite 2200
220 Montgomery Street
San Francisco, CA 94104

Date Mailed: 07/19/2001

NOTICE TO FILE MISSING PARTS OF NONPROVISIONAL APPLICATION

FILED UNDER 37 CFR 1.53(b)

Filing Date Granted

An application number and filing date have been accorded to this application. The item(s) indicated below, however, are missing. Applicant is given **TWO MONTHS** from the date of this Notice within which to file all required items and pay any fees required below to avoid abandonment. Extensions of time may be obtained by filing a petition accompanied by the extension fee under the provisions of 37 CFR 1.136(a).

- The oath or declaration is unsigned.
- To avoid abandonment, a late filing fee or oath or declaration surcharge as set forth in 37 CFR 1.16(e) of $65 for a small entity in compliance with 37 CFR 1.27, must be submitted with the missing items identified in this letter.
- **The balance due by applicant is $ 65.**

- This application does not contain a statement that the content of the sequence listing information recorded in computer readable form is identical to the written (on paper or compact disc) sequence listing and, where applicable, includes no new matter, as required by 37 CFR 1.821(e), 1.821(f), 1.821(g), 1.825(b), or 1.825(d). Applicant must provide such statement. If the effective filing date is on or after September 8, 2000, see the final rulemaking notice published in the Federal Register at 65 FR 54604 (September 8, 2000) and 1238 OG 145 (September 19, 2000).
- A copy of the "Sequence Listing" in computer readable form has not been submitted as required by 37 C.F.R. 1.821(e). If the effective filing date is on or after September 8, 2000, see the final rulemaking notice published in the Federal Register at 65 FR 54604 (September 8, 2000) and 1238 OG 145 (September 19, 2000). Applicant must provide an initial computer readable form (CRF) copy of the "Sequence Listing" and a statement that the content of the sequence listing information recorded in computer readable form is identical to the written (on paper or compact disc) sequence listing and, where applicable, includes no new matter, as required by 37 CFR 1.821(e), 1.821(f), 1.821(g), 1.825(b), or 1.825(d). If applicant desires the sequence listing in the instant application to be identical with that of another application on file in the U.S. Patent and Trademark Office, such request in accordance with 37 CFR 1.821(e) may be submitted in lieu of a new CRF.

02/07/2002 CNGUYEN 00000112 09882945
01 FC:205 65.00 OP

For questions regarding compliance to these requirements, please contact:

- **For Rules Interpretation, call (703) 308-4216**
- **To Purchase PatentIn Software, call (703) 306-2600**
- **For PatentIn Software Program Help, call (703) 306-4119 or e-mail at patin21help@uspto.gov or patin3help@uspto.gov**

A copy of this notice MUST be returned with the reply.

Customer Service Center
Initial Patent Examination Division (703) 308-1202

PART 2 - COPY TO BE RETURNED WITH RESPONSE

OIPE
FEB 0 5 2002
PATENT & TRADEMARK OFFICE

COPY OF PAPERS ORIGINALLY FILED

PATENT

Attorney Docket No. **FORS-04586**

IN THE UNITED STATES PATENT AND TRADEMARK OFFICE

In re Application of:	Victor Lyamichev *et al.*		
Serial No.:	09/882,945	Group No.:	
Filed:	06/15/01	Examiner:	
Entitled:	**Nucleic Acid Accessible Hybridization Sites**		

RESPONSE TO NOTICE TO FILE MISSING PARTS

Attention: Box Missing Parts
Assistant Commissioner for Patents
Washington, D.C. 20231

CERTIFICATE OF MAILING UNDER 37 C.F.R. § 1.8(a)(1)(i)(A)

I hereby certify that this correspondence (along with any referred to as being attached or enclosed) is, on the date shown below, being deposited with the U.S. Postal Service with sufficient postage as first class mail in an envelope addressed to: Assistant Commissioner for Patents, Washington, D.C. 20231, on **January 4, 2002**.

By: Mary Ellen Waite
Mary Ellen Waite

Sir or Madam:

In response to the Notice to File Missing Parts of Application -- Filing Date Granted (Form PTO-1533) mailed **07/19/2001** (a copy of which is enclosed), applicants submit the following documents:

- Executed declaration or oath
- an Assignment document for recording whereby the subject application and the invention disclosed therein is assigned to Third Wave Technologies, Inc., 502 South Rosa Road, Madison, WI 53719 and a Recordation Form Cover Sheet -- Patents Only (Form PTO-1595)
- Power of Attorney by Assignee
- Sequence Listing in paper copy and on a computer-readable diskette
- Certificate re: Sequence Listing
- Petition for extension of time for filing within the fourth month

A check in the amount of **$825.00** is enclosed herewith to cover:

$65.00 surcharge for filing missing parts of an application

$40.00 recordation fee

$720.00 for filing a four month extension of time

The Commissioner is hereby authorized to charge payment of any fees associated with this communication or credit any overpayment to Deposit Account No. **08-1290**. **An originally executed duplicate of this transmittal is enclosed for this purpose.**

Dated: January 4, 2002

David A. Casimir
Registration No. 42,395
MEDLEN & CARROLL, LLP
101 Howard Street, Suite 305
San Francisco, California 94105
415/904-6500

02/07/2002 CNGUYEN 00000112 09882945
03 FC:218 720.00 OP

03CO

PATENT

Attorney Docket No. **FORS-04586**

OIPE
MAY 10 2002
JC97
PATENT & TRADEMARK OFFICE

IN THE UNITED STATES PATENT AND TRADEMARK OFFICE

In re Application of: Lyamichev *et al.*
Serial No.: 09/882,945
Filed: 06/15/01
Entitled: **NUCLEIC ACID ACCESIBLE HYBRIDIZATION SITES**

TRANSMITTAL

Assistant Commissioner for Patents
Washington, D.C. 20231

CERTIFICATE OF MAILING UNDER 37 C.F.R. § 1.8(a)(1)(i)(A)

I hereby certify that this correspondence (along with any referred to as being attached or enclosed) is, on the date shown below, being deposited with the U.S. Postal Service with sufficient postage as first class mail in an envelope addressed to: Assistant Commissioner for Patents, Box Sequence, P.O. Box 2327, Arlington, VA 22202.

Dated: 5-7-02 By: Mary Ellen Waite

Sir or Madam:

Transmitted herewith are:

1. Sequence Listing (substitute paper copy and computer readable floppy)
2. Certificate re Sequence Lisitng
3. Preliminary Amendment/Response
4. Notice to Comply with Requirements for Patent Applications Containing Nucleotide Sequence and/or Amino Acid Sequence Disclosures;

Please charge any additional fees, including any fees necessary for extensions of time, or credit overpayment to Deposit Account No. **08-1290**. **An originally executed duplicate of this transmittal is enclosed for this purpose.**

Dated: 5/7/02 By:

David A.Casimir
Registration No. 42,395

MEDLEN & CARROLL, LLP
101 Howard Street, Suite 350
San Francisco, California 94105
(415) 904.6500

UNITED STATES PATENT AND TRADEMARK OFFICE

COMMISSIONER FOR PATENTS
UNITED STATES PATENT AND TRADEMARK OFFICE
WASHINGTON, D.C. 20231
www.uspto.gov

APPLICATION NUMBER	FILING/RECEIPT DATE	FIRST NAMED APPLICANT	ATTORNEY DOCKET NUMBER
09/882,945	06/15/2001	Victor Lyamichev	FORS-04586

OIPE JC97
MAY 1 0 2002
PATENT & TRADEMARK OFFICE

CONFIRMATION NO. 9139

FORMALITIES LETTER

OC000000007619485

MEDLEN & CARROLL, LLP
Suite 2200
220 Montgomery Street
San Francisco, CA 94104

Date Mailed: 03/12/2002

NOTICE TO COMPLY WITH REQUIREMENTS FOR PATENT APPLICATIONS CONTAINING NUCLEOTIDE SEQUENCE AND/OR AMINO ACID SEQUENCE DISCLOSURES

Applicant is given **TWO MONTHS FROM THE DATE OF THIS NOTICE** within which to file the items indicated below to avoid abandonment. Extensions of time may be obtained under the provisions of 37 CFR 1.136(a).

- The computer readable form that has been filed with this application has been found to be damaged and/or unreadable as indicated on the attached CRF Diskette Problem Report. A substitute computer readable form must be submitted as required by 37 C.F.R. 1.825(d). Applicant must provide a substitute computer readable form (CRF) copy of the "Sequence Listing" and a statement that the content of the sequence listing information recorded in computer readable form is identical to the written (on paper or compact disc) sequence listing and, where applicable, includes no new matter, as required by 37 CFR 1.821(e), 1.821(f), 1.821(g), 1.825(b), or 1.825(d). If applicant desires the sequence listing in the instant application to be identical with that of another application on file in the U.S. Patent and Trademark Office, such request in accordance with 37 CFR 1.821(e) may be submitted in lieu of a new CRF.

For questions regarding compliance to these requirements, please contact:

- **For Rules Interpretation, call (703) 308-4216**
- **To Purchase PatentIn Software, call (703) 306-2600**
- **For PatentIn Software Program Help, call (703) 306-4119 or e-mail at patin21help@uspto.gov or patin3help@uspto.gov**

A copy of this notice MUST be returned with the reply.

Customer Service Center
Initial Patent Examination Division (703) 308-1202

PART 2 - COPY TO BE RETURNED WITH RESPONSE

UNITED STATES PATENT AND TRADEMARK OFFICE

COMMISSIONER FOR PATENTS
UNITED STATES PATENT AND TRADEMARK OFFICE
P.O. BOX 1450
ALEXANDRIA, VA 22313-1450
www.uspto.gov

FOGG AND ASSOCIATES, LLC
P.O. BOX 581339
MINNEAPOLIS, MN 55458-1339

COPY MAILED

DEC 0 2 2005

OFFICE OF PETITIONS

In re Application of	:	
Chan et al.	:	
Application No. 09/882,960	:	DECISION ON APPLICATION
Filed: June 15, 2001	:	FOR
Atty Docket No. 100.208US01	:	PATENT TERM ADJUSTMENT
	:	

This is a decision on the "REQUEST FOR RECONSIDERATION OF THE PATENT TERM ADJUSTMENT," filed June 29, 2005. Applicants request that an additional 214 days should be added to the patent term adjustment on the basis that the Office is taking in excess of three years to issue the patent[1].

The instant application for patent term adjustment requests reconsideration of the patent term adjustment as it relates to the Office's failure to issue the patent within 3 years of the filing date. A decision is being **held in abeyance** until after the actual patent date. Knowledge of the actual date the patent issues is required to calculate the amount, if any, of additional patent term patentee is entitled to for Office failure to issue the patent within 3 years. See § 1.703(b).

Patentees are given **TWO (2) MONTHS** from the issue date of the patent to file a written request for reconsideration of the patent term adjustment for Office failure to issue the patent within 3 years. A copy of this decision should accompany the request. Patentees may seek such consideration without payment of an additional fee. However, as to all other bases for seeking reconsideration of the patent term adjustment indicated

[1] Otherwise, applicants agree with the initial determination of patent term adjustment at the time of the mailing of the notice of allowance.

in the patent, all requirements of § 1.705(d) must be met. Requests for reconsideration on other bases must be timely filed and must include payment of the required fee.

Petitioner is reminded that if an application is entitled to an adjustment under 35 U.S.C. 154(b)(1)(B), the entire period during which the application was pending (except for periods excluded under 35 U.S.C. 154(b)(1)(B)(i)-(iii)), and not just the period beginning three years after the actual filing date of the application, is the period of delay under 35 U.S.C. 154(b)(1)(B) in determining whether periods of delay overlap under 35 U.S.C. 154(b)(2)(A). Thus, any days of delay for Office issuance of the patent more than 3 years after the filing date of the application which overlap with the days of patent term adjustment accorded prior to the issuance of the patent will not result in any additional patent term adjustment. See 35 U.S.C. 154(b)(1)(B), 35 U.S.C. 154(b)(2)(A), and 37 CFR § 1.703(f). See also *Revision of Patent Term Extension and Patent Term Adjustment Provisions; Final Rule*, 69 Fed. Reg. 21704 (April 22, 2004).

The Office acknowledges submission of the $200.00 fee set forth in 37 CFR 1.18(e). No additional fees are required.

The application file is being forwarded to the Office of Patent Publication for issuance of the patent.

Telephone inquiries specific to this matter should be directed to Nancy Johnson, Senior Petitions Attorney, at (571) 272-3219.

Kery A. Fries

Kery A. Fries
Senior Legal Advisor
Office of Patent Legal Administration
Office of Deputy Commissioner
for Patent Examination Policy

Hewlett Packard
200301737-1 GSW

UNITED STATES PATENT AND TRADEMARK OFFICE
COMMISSIONER FOR PATENTS
UNITED STATES PATENT AND TRADEMARK OFFICE
P.O. BOX 1450
ALEXANDRIA, VA 22313-1450
www.uspto.gov

RECEIVED
MAR 10 2004
HP LEGAL
IPA

OIPE JC146
APR 0 9 2004
PATENT & TRADEMARK OFFICE

RECEIVED RECORDS
JAN 26 2004
& DOCKETING CA OFFICE

Paper No.

COPY MAILED
JAN 1 6 2004
OFFICE OF PETITIONS

PENNIE & EDMONDS, LLP
3300 HILLVIEW AVENUE
PALO ALTO, CA 94304

In re Application of
Malcolm Mosher Jr.
Application No. 09/883,066
Filed: June 15, 2001
Attorney Docket No. 9806-0035-999

ON PETITION

This is a decision on the petition under 37 CFR 1.313(c)(2), filed January 16, 2004, to withdraw the above-identified application from issue after payment of the issue fee.

The petition is **GRANTED**.

The above-identified application is withdrawn from issue for consideration of a submission under 37 CFR 1.114 (request for continued examination). See 37 CFR 1.313(c)(2).

Petitioner is advised that the issue fee paid on October 10, 2003, in the above-identified application cannot be refunded. If, however, the above-identified application is again allowed, petitioner may request that it be applied towards the issue fee required by the new Notice of Allowance.[1]

It does not appear that the instant petition is signed by an attorney of record. However, in accordance with 37 CFR 1.34(a), the signature of Jonathan M. Harris appearing on the correspondence shall constitute a representation to the United States Patent and Trademark Office that he is authorized to represent the particular party in whose behalf he acts. However, if Mr. Harris desires to receive correspondence regarding this file, the appropriate power of attorney documentation must be submitted. A courtesy copy of this decision is being mailed to Mr. Harris, the petitioner herein. However, until otherwise instructed, all future correspondence regarding this application file will be directed solely to the above-noted correspondence address of record.

Telephone inquiries relating to this decision should be directed to the undersigned at (703) 305-9220.

[1]The request to apply the issue fee to the new Notice may be satisfied by completing and returning the new Issue Fee Transmittal Form PTOL-85(b), which includes the following language thereon: "Commissioner for Patents is requested to apply the Issue Fee and Publication Fee (if any) or re-apply any previously paid issue fee to the application identified above." Petitioner is advised that, whether a fee is indicated as being due or not, the Issue Fee Transmittal Form must be completed and timely submitted to avoid abandonment. Note the language in bold text on the first page of the Notice of Allowance and Fee(s) Due (PTOL-85).

UNITED STATES PATENT AND TRADEMARK OFFICE

COMMISSIONER FOR PATENTS
UNITED STATES PATENT AND TRADEMARK OFFICE
WASHINGTON, D.C. 20231
www.uspto.gov

Paper No. 6

COPY MAILED

MAY 23 2002

OFFICE OF PETITIONS

RYAN KROMHOLZ & MANION, S.C.
POST OFFICE BOX 26618
MILWAUKEE WI 53226-0618

In re Application of
Thompson, et al.
Application No. 09/883,089
Filed: June 15, 2001
Attorney Docket No. 9345.17121-CON 1

DECISION GRANTING PETITION

This is a decision on the petition entitled, "PETITION ACCOMPANYING PARTIAL RESPONSE TO NOTICE TO FILE MISSING PARTS OF NONPROVISIONAL APPLICATION,", filed September 10, 2001 (certificate of mailing date September 6, 2001), requesting, in effect, partial withdrawal of the Notice to File Missing Parts of Nonprovisional Application (Notice) . The petition will be treated under 37 CFR 1.53(e).

The application was deposited on June 15, 2001. On July 6, 2001, the Office of Initial Patent Examination mailed a Notice informing petitioners, *inter alia*, that drawing figure 8, as described in the specification, appeared to have been omitted.

In response to the Notice, petitioners timely filed the present petition. Petitioners request that drawing figure 8 be accorded a filing date of June 15, 2001 on the basis that 9 sheets of drawing figures, including drawing figure 8, were received in the Patent and Trademark Office (PTO) on June 15, 2001. In support, the petition is accompanied by a copy of applicants' itemized postcard receipt showing an Office of Initial Patent Examination generated barcode citing June 15, 2001 as the date of receipt. The postcard lists, *inter alia*, that the filing included 9 sheets of drawings.

The return postcard constitutes *prima facie* evidence that 9 sheets of drawing figures, including drawing.figure 8, were filed on June 15, 2001. MPEP 503. Accordingly, the request is granted.

Pursuant to petitioners' request, the $130.00 petition fee will be credited to deposit account no. 06-2360.

The application is being returned to Office of Initial Patent Examination for further processing, with a filing date of June 15, 2001, using the copy of drawing figure 8 submitted with the instant petition. Office records will be corrected to show that 9 sheets of drawings were present on filing.

Any inquiries pertaining to this matter may be directed to Petitions Attorney E. Shirene Willis at (703) 308-6712.

Beverly M. Flanagan
Supervisory Petitions Examiner
Office of Petitions
Office of the Deputy Commissioner
for Patent Examination Policy

UNITED STATES PATENT AND TRADEMARK OFFICE

COMMISSIONER FOR PATENTS
UNITED STATES PATENT AND TRADEMARK OFFICE
WASHINGTON, D.C. 20231
www.uspto.gov

Paper No. 5

COPY MAILED

JUL 24 2001

OFFICE OF PETITIONS
A/C PATENTS

LAW OFFICES OF JONATHAN ALAN QUINE
PO BOX 458
ALAMEDA, CA 94501

In re Application of
James Davies
Application No. 09/883,094
Filed: June 15, 2001
Attorney Docket No. 506-000110US

DECISION GRANTING PETITION

This is a decision on the petition under 37 CFR 1.10(c), filed July 10, 2001, requesting that the above-identified application be accorded a filing date of June 15, 2001, rather than the presently accorded filing date of June 16, 2001.

Petitioner alleges that the application was deposited in Express Mail service on June 15, 2001. In support of the allegation, the petition is accompanied by a copy of Express Mail label No. EL855325604US. Although the "date-in" is June 16, 2001, the Express Mail label contains a United States Postal Service (USPS) stamp of June 15, 2001. The same Express Mail label number was placed on the original application papers located in the official file.

In view of the above, the petition is **granted**. No petition fee is necessary.

This application file will be forwarded to the Office of Initial Patent Examination for correction of the filing date to **June 15, 2001**.

Telephone inquiries should be directed to the undersigned at (703) 306-5589.

Christina T. Tartera

Christina T. Tartera
Petitions Attorney
Office of Petitions
Office of the Deputy Commissioner
for Patent Examination Policy

SPE RESPONSE FOR CERTIFICATE OF CORRECTION

Paper No.: ——

DATE : 4/27/05

TO SPE OF : ART UNIT 1753

SUBJECT : Request for Certificate of Correction on Patent No.: 6795331 B2

A response is requested with respect to the accompanying request for a certificate of correction.

Please complete this form and return with file, within **7** days to:
Certificates of Correction Branch - PK 3-915
Palm location **7580** - Tel. No. 305-8309

With respect to the change(s) requested, correcting Office and/or Applicant's errors, should the patent read as shown in the certificate of correction? No new matter should be introduced, nor should the scope or meaning of the claims be changed.

Virginia Tolbert

Thank You For Your Assistance — **Certificates of Correction Branch**

The request for issuing the above-identified correction(s) is hereby:
Note your decision on the appropriate box.

- ☑ **Approved** — All changes apply.
- ☐ **Approved in Part** — Specify below which changes **do not** apply.
- ☐ **Denied** — State the reasons for denial below.

Comments:

Nam Nguyen — SPE

1753 — Art Unit

OIPE JC54 MAR 0 8 2002 PATENT & TRADEMARK OFFICE

Receipt

Please type a plus sign (+) inside this box → +

PTO/SB/21 (08-00)
Approved for use through 10/31/2002. OMB 0651-0031
U.S. Patent and Trademark Office: U.S. DEPARTMENT OF COMMERCE

Under the Paperwork Reduction Act of 1995, no persons are required to respond to a collection of information unless it displays a valid OMB control number.

TRANSMITTAL FORM

(to be used for all correspondence after initial filing)

Application Number	09/883,152
Filing Date	June 15, 2001
First Named Inventor	KENNEDY, GIULIA C.
Group Art Unit	1645
Examiner Name	Unassigned
Total Number of Pages in This Submission	25
Attorney Docket Number	1663.002

ENCLOSURES (check all that apply)

- [x] Fee Transmittal Form
  - [ ] Fee Attached
- [ ] Amendment / Reply
  - [ ] After Final
  - [ ] Affidavits/declaration(s)
- [x] Request for Corrected Filing Receipt
- [x] Red Marked copy of Filing Receipt with Correction
- [ ] Information Disclosure Statement
- [ ] Certified Copy of Priority Documents
- [x] Response to Missing Parts/ Incomplete Application
- [x] Executed Declaration in Four Parts
- [x] Submission of Formal Drawings Transmittal
- [x] Drawing(s) (8 Sheets)
- [ ] Licensing-related Papers
- [ ] Petition
- [ ] Petition to Convert to a Provisional Application
- [ ] Power of Attorney, Revocation Change of Correspondence Address
- [ ] Terminal Disclaimer
- [ ] Request for Refund
- [ ] CD, Number of CD(s) ____
- [ ] After Allowance Communication to Group
- [ ] Appeal Communication to Board of Appeals and Interferences
- [ ] Appeal Communication to Group *(Appeal Notice, Brief, Reply Brief)*
- [ ] Proprietary Information
- [ ] Status Letter
- [ ] Other Enclosure(s) *(please identify below):* **Return Postcard**

Remarks

SIGNATURE OF APPLICANT, ATTORNEY, OR AGENT

Firm or Individual Name	CAROL L. FRANCIS, Reg. No. 36,513
Signature	Carol L. Francis
Date	February 28, 2002

CERTIFICATE OF MAILING

I hereby certify that this correspondence is being deposited with the United States Postal Service with sufficient postage as first class mail in an envelope addressed to: Commissioner for Patents, Washington, DC 20231 on this date: February 28, 2002.

Typed or printed name	Steven E. Goldstein		
Signature		Date	February 28, 2002

Burden Hour Statement: This form is estimated to take .2 hours to complete. Time will vary depending upon the needs of the individual case. Any comments on the amount of time you are required to complete this form should be sent to the Chief Information Officer, U.S. Patent and Trademark Office, Washington, DC 20231. DO NOT SEND FEES OR COMPLETED FORMS TO THIS ADDRESS. SEND TO: Assistant Commissioner for Patents, Washington, DC 20231.

PTO/SB/17 (10-01)
Approved for use through 10/31/2002. OMB 0651-0032
U.S. Patent and Trademark Office; U.S. DEPARTMENT OF COMMERCE
Under the Paperwork Reduction Act of 1995, no persons are required to respond to a collection of information unless it displays a valid OMB control number.

FEE TRANSMITTAL for FY 2002

Patent fees are subject to annual revision.

OIPE JC54
MAR 0 8 2002
PATENT & TRADEMARK OFFICE

TOTAL AMOUNT OF PAYMENT	($) 2,442.00

Complete if Known	
Application Number	09/883,152
Filing Date	June 15, 2001
First Named Inventor	KENNEDY, GIULIA C.
Examiner Name	Unassigned
Group Art Unit	1645
Attorney Docket No.	1663.002

METHOD OF PAYMENT

1. ☒ The Commissioner is hereby authorized to charge indicated fees and credit overpayments to:
Deposit Account Number **50-0815**
Deposit Account Name **Bozicevic, Field & Francis LLP**
☒ Charge Any Additional Fee Required Under 37 CFR 1.1 6 and 1.17
☐ Applicant Claims small entity status. **See 37 CFR 1.27**

2. ☐ **Payment Enclosed:**
☐ Check ☐ Credit Card ☐ Money Order ☐ Other

FEE CALCULATION

2. BASIC FILING FEE

Large Entity Fee Code	Large Entity Fee ($)	Small Entity Fee Code	Small Entity Fee ($)	Fee Description	Fee Paid
101	740	201	370	Utility filing fee	740
106	330	206	165	Design filing fee	
107	510	207	255	Plant filing fee	
108	740	208	370	Reissue filing fee	
114	160	214	80	Provisional filing fee	
				SUBTOTAL (1)	740

1. EXTRA CLAIM FEES

	Extra Claims	Fee from below	Fee Paid
Total Claims 42 -20**	= 22 x	18	= 396
Indep. Claims 17-3**	= 14 x	84	= 1176
Multiple Dependent			=

Large Entity Fee Code	Large Entity Fee ($)	Small Entity Fee Code	Small Entity Fee ($)	Fee Description
103	18	203	9	Claims in excess of 20
102	84	202	42	Independent claims in excess of 3
104	280	204	140	Multiple dependent claim, if not paid
109	84	209	42	** Reissue independent claims over original patent
110	18	210	9	** Reissue claims in excess of 20 **and over original patent**

SUBTOTAL (2) $ 1,572

***or number previously paid, if greater; For Reissues, see above.*

FEE CALCULATION (continued)

3. ADDITIONAL FEES

Large Entity Fee Code	Large Entity Fee ($)	Small Entity Fee Code	Small Entity Fee ($)	Fee Description	Fee Paid
105	130	205	65	Surcharge – late filing fee or oath	130
127	50	227	25	Surcharge – late provisional filing fee or cover sheet	
139	130	139	130	Non-English specification	
147	2,520	147	2,520	For filing a request for *ex parte* reexamination	
112	920*	112	920*	Requesting publication of SIR prior to Examination action	
113	1,840*	113	1,840*	Requesting publication of SIR after Examiner action	
115	110	215	55	Extension for reply within first month	
116	400	216	200	Extension for reply within second month	
117	920	217	460	Extension for reply within third month	
118	1,440	218	720	Extension for reply within fourth month	
128	1,960	228	980	Extension for reply within fifth month	
119	320	219	160	Notice of Appeal	
120	320	220	160	Filing a brief in support of an appeal	
121	280	221	140	Request for oral hearing	
138	1,510	138	1,510	Petition to institute a public use proceeding	
140	110	240	55	Petition to revive – unavoidable	
141	1,280	241	640	Petition to revive – unintentional	
142	1,280	242	640	Utility issue fee (or reissue)	
143	460	243	230	Design issue fee	
144	620	244	310	Plant issue fee	
122	130	122	130	Petitions to the Commissioner	
123	50	123	50	Processing fee under 37 CFR 1.17(q)	
126	180	126	180	Submission of Information Disclosure Stmt	
581	40	581	40	Recording each patent assignment per property (times number of properties)	
146	740	246	370	For each additional invention to be examined (37 CFR § 1.129(a))	
149	740	249	370	For each additional invention to be examined (37 CFR § 1.129(b))	
179	740	279	370	Request for Continued Examination (RCE)	
169	900	169	900	Request for expedited examination of a design application	

Other fee (specify)_____

*Reduced by Basic Filing Fee Paid

SUBTOTAL (3) ($) 130

SUBMITTED BY				Complete (*if applicable*)	
Name (Print/Type)	Carol L. Francis	*Registration No. (Attorney/Agent)*	36,513	*Telephone*	(650) 327-3400
Signature	Carol L. Francis			*Date*	02/28/2002

WARNING: Information on this form may become public. Credit card information should not be included on this form. Provide credit card information and authorization on PTO-2038.

Burden Hour Statement: This form is estimated to take 0.2 hours to complete. Time will vary depending upon the needs of the individual case. Any comments on the amount of time you are required to complete this form should be sent to the Chief Information Officer, U.S. Patent and Trademark Office, Washington, DC 20231. DO NOT SEND FEES OR COMPLETED FORMS TO THIS ADDRESS. SEND TO: Assistant Commissioner for Patents, Washington, DC 20231.

OIPE JC54
MAR 0 8 2002
PATENT & TRADEMARK OFFICE

UNITED STATES PATENT AND TRADEMARK OFFICE

COMMISSIONER FOR PATENTS
UNITED STATES PATENT AND TRADEMARK OFFICE
WASHINGTON, D.C. 20231
www.uspto.gov

APPLICATION NUMBER	FILING/RECEIPT DATE	FIRST NAMED APPLICANT	ATTORNEY DOCKET NUMBER
09/883,152	06/15/2001	Giulia Kennedy	097268061663.002

CONFIRMATION NO. 8227

FORMALITIES LETTER

OC000000007268849

Chiron Corporation
Intellectual Property - R440
P.O. BOX 8097
Emeryville, CA 94662-8097

Date Mailed: 01/04/2002

NOTICE TO FILE MISSING PARTS OF NONPROVISIONAL APPLICATION

FILED UNDER 37 CFR 1.53(b)

Filing Date Granted

An application number and filing date have been accorded to this application. The item(s) indicated below, however, are missing. Applicant is given **TWO MONTHS** from the date of this Notice within which to file all required items and pay any fees required below to avoid abandonment. Extensions of time may be obtained by filing a petition accompanied by the extension fee under the provisions of 37 CFR 1.136(a).

- The statutory basic filing fee is missing.
  Applicant must submit $ **710** *to complete the basic filing fee for a non-small entity. If appropriate, applicant may make a written assertion of entitlement to small entity status and pay the small entity filing fee (37 CFR 1.27).*
- Total additional claim fee(s) for this application is $1516.
  - **$396** for **22** total claims over 20.
  - **$1120** for **14** independent claims over 3 .
- The oath or declaration is unsigned.
- To avoid abandonment, a late filing fee or oath or declaration surcharge as set forth in 37 CFR 1.16(l) of $130 for a non-small entity, must be submitted with the missing items identified in this letter.
- **The balance due by applicant is $ 2356.**

The application is informal since it does not comply with the regulations for the reason(s) indicated below.

The required item(s) identified below must be timely submitted to avoid abandonment:

- Substitute drawings in compliance with 37 CFR 1.84 because:
  - Drawings must be reasonably free from erasures and must be free from alterations, overwritings, interlineations, folds, and copy marks.

03/13/2002 BNGUYEN1 00000063 500815 09883152

01 FC:101 740.00 CH
02 FC:103 396.00 CH
03 FC:102 1176.00 CH
04 FC:105 130.00 CH

A copy of this notice MUST be returned with the reply.

Customer Service Center
Initial Patent Examination Division (703) 308-1202
PART 2 - COPY TO BE RETURNED WITH RESPONSE

UNITED STATES PATENT AND TRADEMARK OFFICE

COMMISSIONER FOR PATEN
UNITED STATES PATENT AND TRADEMARK OFFI
WASHINGTON, D.C. 2023
www.uspto.g

Paper No. 3

Paul J. Skwierawski
ANTONELLI, TERRY, STOUT &
KRAUS, LLP
1300 North Seventeenth Street, Suite 1800
Arlington, VA 22209

MAILED

JUL 0 7 2003

Technology Center 2100

In re Application of:	)	
Jain, et al.	)	
Application No. 09/883,190	)	**DECISION ON REQUEST FOR**
Filed: June 19, 2001	)	**WITHDRAWAL AS ATTORNEY**
For: METHOD OF AND APPARATUS FOR TESTING A SERIAL DIFFERENTIAL/MIXED SIGNAL DEVICE	)	

This is a decision on the Request To Withdraw from Representation filed June 05, 2003.

A grantable request to withdraw as attorney of record should indicate thereon the present mailing addresses of the attorney(s) who is/are withdrawing from the record and of the applicant. The request for withdrawal must be signed by every attorney seeking to withdraw or contain a clear indication that one attorney is signing on behalf of another/others. A request to withdraw will not be approved unless at least 30 (thirty) days would remain between the date of approval and the later of the expiration date of a time to file a response or the expiration date of the maximum time period which can be extended under 37 C.F.R. § 1. 136(a). The effective date of withdrawal being the date of decision and not the date of request. See M.P.E.P. § 402.06. 37 C.F.R. § 1.36 further requires that the applicant or patent owner be notified of the withdrawal of the attorney or agent.

The request filed June 05, 2003 meets all the requirements. Accordingly the request is **GRANTED**.

All future communications from the Office will be directed to the below-listed address until otherwise notified by applicant. This correspondence address is provided by the withdrawn attorney(s). Applicant is reminded of the obligation to promptly notify the Patent and Trademark Office (Office) of any change in correspondence address to ensure receipt of all communications from the Office.

James R. Matthew

JM Vincent N. Trans
Special Programs Examiner
Technology Center 2100
Computer Architecture and Software
(703) 305-9750

cc: KENYON & KENYON
1500 K Street, N.W.
Suite 700
Washington, DC 20005-1257

UNITED STATES PATENT AND TRADEMARK OFFICE

COMMISSIONER FOR PATENTS
UNITED STATES PATENT AND TRADEMARK OFFICE
P.O. BOX 1450
ALEXANDRIA, VA 22313-1450
www.uspto.gov

MAILED

OCT 13 2005

DIRECTOR'S OFFICE
TECHNOLOGY CENTER 2600

Berkeley Law & Technology Group
1700NW 167th Place
Suite 240
Beaverton, OR 97006

In re Application of
Chui-Kuei Chiu
Application No. 09/883,195
Filed: June 19, 2001
For: **CALIBRATION METHOD OF AN IMAGE-CAPTURE APPARATUS**

DECISION ON PETITION

This is a decision on the Petition to Withdraw Abandonment filed September 6, 2005, pursuant to 37 C.F.R. § 1.181(a). No fee is required.

The application was held abandoned for failure to respond in a timely manner and effective manner to the Office communication mailed December 15, 2004. A Notice of Abandonment was mailed July 1, 2005. It is noted that the Notice of Abandonment states that attorney Kien Le confirmed the abandonment of the application.

Petitioner alleges to have timely filed a response to said Office communication on June 15, 2005. Petitioner has provided copies of the response, power of attorney, petition for extension of time and copies of the certificate of transmission and facsimile auto reply from the U.S. Patent & Trademark Office.

A review of the application file reveals that the original submissions mentioned above, was received on June 15, 2005 and matched with the file.

The application was not abandoned in fact, despite the statements noted from the attorney Kien Le on the Notice of Abandonment The response filed June 15, 2005 included a revocation of power of attorney. Therefore, had the revocation been timely processed, attorney Kien Le would not have been an attorney of record during the noted conversation on the Notice of Abandonment. Therefore, the Notice of Abandonment is hereby vacated and the holding of abandonment withdrawn.

Applicant's petition is **Granted**.

The application file is being forwarded to the Technology Center's technical support staff for processing the Revocation of Power of Attorney and entry of applicant's response. From there the application will be forwarded to the examiner for action in appropriate turn.

Dwayne Bost
Special Program Examiner
Technology Center 2600
Communications