UNITED STATES PATENT AND TRADEMARK OFFICE

COMMISSIONER FOR PATENTS
UNITED STATES PATENT AND TRADEMARK OFFICE
P.O. BOX 1450
ALEXANDRIA, VA 22313-1450
www.uspto.gov

Paper No. 9

BANNER & WITCOFF
1001 G. Street N.W.
Suite 1100
Washington, DC 20001

JUL -2 2003

In re Application of	:	
Hiroyuki Nitta et al.	:	DECISION ON PETITION
Application No. 09/883,210	:	
Filed: June 19, 2001	:	
Attorney Docket No. 01701.00086	:	

This is a decision on the petition filed January 30, 2003, requesting that the holding of abandonment in the above-identified application be withdrawn, or in the alternative, to revive the application under 37 C.F.R. 1.137(b)[1].

The petition to withdraw the holding of abandonment is DENIED.

A restriction requirement and an election of species requirement were mailed February 7, 2002, setting a one-month shortened statutory period for filing a response. On March 5, 2002, applicant responded to the restriction requirement, but failed to elect a species for examination purposes. The March 5, 2002 response was held non-responsive and another Office action was mailed March 22, 2002, setting a one month shorten statutory period for filing a response. In the absence of a response, the application was held abandoned and a Notice of Abandonment was mailed January 17, 2003.

Petitioner asserts that a response was timely filed by facsimile transmission on April 19, 2002 together with a preliminary amendment. To support the assertion, petitioner submitted 1) a copy of a response entitled "Response to Election Requirement " which bears a Certificate of Transmission under 37 C.F.R. § 1.8(a) dated April 19, 2002, 2) a

[1]This decision addresses the petition to withdraw the holding of abandonment only. A decision on the petition under 37 C.F.R. § 1.137(b) will be addressed by the Deputy Commissioner for Patent Examination Policy.

copy of a paper entitled "Amendment" which bears a Certificate of Transmission under 37 C.F.R. § 1.8(a) dated April 19, 2002, 3) a copy of the sending unit's report confirming successful transmission of the Amendment on April 19, 2002.

The file record does not include the originally submitted papers.

A review of the record does not show evidence that the election was in fact sent by way of facsimile transmission with a report of successful transmission thereof. The copy of the sending unit's report confirming successful transmission of the Amendment on April 19, 2002 does not support timely facsimile transmission of the "Response to Election Requirement." Further, the sending unit's report shows transmission of three pages, not enough pages to support sending of the election also.

The petition does not satisfy the conditions for accepting a response filed using a certificate of transmission under 37 C.F.R. § 1.8(a) but lost after being received by the USPTO. Accordingly, the petition is denied.

The application filed is being forwarded to the Deputy Commissioner for Patent Examination Policy, Office of Petitions, for consideration of the Petition to Revive Unintentional.

Sharon A. Gibson
Technology Center 2800 Director
Semiconductors, Electrical and Optical
Systems and Components

UNITED STATES PATENT AND TRADEMARK OFFICE

Commissioner for Patents
United States Patent and Trademark Office
P.O. Box 1450
Alexandria, VA 22313-1450
www.uspto.gov

Paper No. 11

BANNER & WITCOFF
1001 G STREET N W
SUITE 1100
WASHINGTON DC 20001

COPY MAILED

JUL 0 1 2004

OFFICE OF PETITIONS

In re Application of
Nitta et al
Application No. 09/883,210
Filed: June 19, 2001
Attorney Docket No. 01701.00086

DECISION ON PETITION

This is a decision on the petition under 37 CFR 1.137(b), filed January 30, 2003, to revive the above-identified application.

This above-identified application became abandoned for failure to timely file a reply to a non-final Office Action mailed February 7, 2002. The non-final Office Action set a one (1) month shortened statutory period for reply. A reply to the non-final Office Action (restriction requirement) was submitted on March 5, 2002. However on March 22, 2002, the Examiner determined the submission was not fully responsive and set a one month reply period. No extensions of time were obtained under the provisions of 37 CFR 1.136(a). Accordingly, this application became abandoned on April 23, 2002. A Notice of Abandonment was mailed on January 17, 2003. A petition to withdraw the holding of abandonment was dismissed on July 2, 2003.

This petition is hereby **GRANTED**.

The Office hereby acknowledges the receipt of the Response to the Restriction and Election Requirement submitted with the instant petition.

This application is being forwarded to Technology Center 2800 for further processing.

Telephone inquiries concerning this matter should be directed to the undersigned at (703) 306-0251.

Charlema R. Grant
Petitions Attorney
Office of Petitions

UNITED STATES PATENT AND TRADEMARK OFFICE

COMMISSIONER FOR PATENT
UNITED STATES PATENT AND TRADEMARK OFFIC
WASHINGTON, D.C. 20231
www.uspto.go

FINNEGAN, HENDERSON, FARABOW, GARRETT &
DUNNER LLP
1300 I STREET, NW
WASHINGTON DC 20006

COPY MAILED

JAN 3 1 2003

OFFICE OF PETITIONS

Applicant: Kanji et al.
Appl. No.: 09/883,229
Filing Date: June 19, 2001
Title: COSMETIC COMPOSITIONS COMPRISING AT LEAST ONE POLYMETHYLSILSESQUIOXANE FILM FORMER
Attorney Docket No.: 05725.0537-00
Pub. No.: US 2002/0031488 A1
Pub. Date: March 14, 2002

This is in response to the request for correction of patent application publication under 37 CFR 1.221(b), which was filed on May 10, 2002.

The request is DISMISSED.

The instant request is that the application be republished because the patent application publication contain several mistakes, which may be material mistakes.

37 CFR 1.221(b) is applicable "only when the Office makes a material mistake which is apparent from Office records." The instant request does not identify a material mistake in the publication made by the Office:

The instant request identifies an error in paragraph 40 of the publication as two $-CH_3$ groups are missing from a chemical formula and in paragraph 86 two values (1.45 and 1.45) are off a line in the table.

A material mistake must affect the public's ability to appreciate the technical disclosure of the patent application publication, to determine the scope of the patent application publication, or to determine the scope of the provisional rights that an applicant may seek to enforce upon issuance of a patent.[1]

The first error identified by applicant is not a material mistake by the Office because the specification as originally filed is not clear as the chemical formula is in a very small font and it is blurry. The typographical error identified by applicant is an Office mistake, but it is not a material mistake as required by 37 CFR 1.221(b) because the technical disclosure including the table and the claims are understandable.

The mistake is a minor typographical error, which is clearly understandable from reading the specification and claims in which the value is used, as words and values are not read in a vacuum

[1] Changes to Implement Eighteen-Month Publication of Patent Applications, 65 FR 57023, 57038 (Sept. 20, 2000), 1239 Off. Gaz. Pat. Office Notices 63, 75 (Oct. 10, 2000) (final rule).

and the value in this instance is clearly off one line in the table as "Phase D" is the label. The error does not affect the public's ability to appreciate the technical disclosure of the patent application publication, or determine the scope of the patent application publication or determine the scope of the provisional rights that an applicant may seek to enforce upon issuance of a patent.

The applicant is advised that he may want to consider filing an amendment replacing the chemical formula in the specification as originally filed, as many of the subscripts in the chemical formula are not legible and errors might occur in any patent that issues from the application.

The applicant is advised that a "request for republication of an application previously published" may be filed under 37 CFR 1.221(a). Such a request for republication "must include a copy of the application in compliance with the Office's electronic filing system requirements and be accompanied by the publication fee set forth in § 1.18(d) and the processing fee set forth in § 1.17(i)." If the request for republication does not comply with the electronic filing system requirements, the republication will not take place and the publication fee set forth in § 1.18(d) will be refunded. The processing fee will be retained.

Any request for republication under 37 CFR 1.221(b), should be submitted via the EFS system and questions or request for reconsideration of this decision, should be addressed as follows:

By mail to: Box PGPUB
Commissioner for Patents
Washington DC 20231

By facsimile: 703-305-8568

The application is being forwarded to Technology Center 1600 to await further examination in due course.

Inquiries relating to this matter may be directed to Mark Polutta at (703) 308-8122 (voice) or (703) 746-3465 (facsimile).

Mark O. Polutta
Office of Patent Legal Administration
Office of the Deputy Commissioner
for Patent Examination Policy

SPE RESPONSE FOR CERTIFICATE OF CORRECTION

Paper No.: ——

DATE : 7/28/09

TO SPE OF : ART UNIT 1615

SUBJECT : Request for Certificate of Correction for Appl. No.: 9/883229 Patent No.: 6991782B2

Please respond to this request for a certificate of correction within 7 days.

FOR IFW FILES:

Please review the requested changes/corrections as shown in the **COCIN** document(s) in the IFW application image. No new matter should be introduced, nor should the scope or meaning of the claims be changed.

Please complete the response (see below) and forward the completed response to scanning using document code **COCX**.

FOR PAPER FILES:

Please review the requested changes/corrections as shown in the attached certificate of correction. Please complete this form (see below) and forward it with the file to:

Certificates of Correction Branch (C of C)
Randolph Square 9D62-B
Palm Location 7580

Virginia Tolbert
Certificates of Correction Branch
703-756-1591

Thank You For Your Assistance

The request for issuing the above-identified correction(s) is hereby:
Note your decision on the appropriate box.

- [x] **Approved** — All changes apply.
- [ ] **Approved in Part** — Specify below which changes **do not** apply.
- [ ] **Denied** — State the reasons for denial below.

Comments: _____

M P Woodward — SPE
1615 — Art Unit

MKQ

UNITED STATES PATENT AND TRADEMARK OFFICE

Commissioner for Patents
United States Patent and Trademark Office
Washington, D.C. 20231
www.uspto.gov

Paper No. _____

ARMSTRONG WESTERMAN & HATTORI LLP
1725 K STREET NW, SUITE 1000
WASHINGTON DC 20006

OIPE JC48 SEP 2 5 2003 PATENT & TRADEMARK OFFICE

RECEIVED MAY - 5 2003 ARMSTRONG, WESTERMAN, HATTORI, LLP

COPY MAILED
MAY 0 1 2003
OFFICE OF PETITIONS

In re Application of
Seiichi Kohara et al
Application No. 09/883,231
Filed: June 19, 2001
Attorney Docket No. 000499A

ON PETITION

This is a decision on the petition under 37 CFR 1.313(c)(2) to withdraw the above-identified application from issue after payment of the issue fee.

The petition is **GRANTED**.

The above-identified application is withdrawn from issue for consideration of a submission under 37 CFR 1.114 (request for continued examination). See 37 CFR 1.313(c)(2).

Petitioner is advised that the issue fee paid on April 25, 2003 in the above-identified application cannot be refunded. If, however, the above-identified application is again allowed, petitioner may request that it be applied towards the issue fee required by the new Notice of Allowance.[1]

Telephone inquiries should be directed to the undersigned at (703) 305-8680.

Upon receipt of the file in the Office of Petitions, the file will be forwarded to Technology Center AU 1742 for processing of the request for continued examination under 37 CFR 1.114.

Frances Hicks
Frances Hicks
Petitions Examiner
Office of Petitions
Office of the Deputy Commissioner
for Patent Examination Policy

seen
DOCKETED JW NF
DATE 5-5-03

[1] The request to apply the issue fee to the new Notice may be satisfied by completing and returning the new Issue Fee Transmittal Form PTOL-85(b), which includes the following language thereon: "Commissioner for Patents is requested to apply the Issue Fee and Publication Fee (if any) or re-apply any previously paid issue fee to the application identified above." Petitioner is advised that, whether a fee is indicated as being due or not, the Issue Fee Transmittal Form **must** be completed and timely submitted to avoid abandonment. Note the language in bold text on the first page of the Notice of Allowance and Fee(s) Due (PTOL-85).

UNITED STATES PATENT AND TRADEMARK OFFICE

Commissioner for Patents
United States Patent and Trademark Office
P.O. Box 1450
Alexandria, VA 22313-1450
www.uspto.gov

ARMSTRONG, KRATZ, QUINTOS, HANSON & BROOKS, LLP
1725 K STREET, NW
SUITE 1000
WASHINGTON DC 20006

COPY MAILED

JAN 30 2007

OFFICE OF PETITIONS

In re Patent of Tochishita et al.	:	
Patent No. 6,878,210	:	
Issue Date: April 12, 2005	:	Decision on Petition
Application No. 09/883,232	:	
Filing Date: June 19, 2001	:	
Attorney Docket No. 991074A	:	

This is a decision on the petition under 37 CFR 1.183 filed September 20, 2005, requesting 37 CFR 3.81(a) "be waived to permit the correct name of the assignee to be provided after the issuance of the patent." The petition is also being treated as a request under 37 CFR 3.81 to accept the correction of the assignee data.

The petition under 37 CFR 1.183 is **DISMISSED AS MOOT.**

The request under 37 CFR 3.81 is **GRANTED.**

Effective June 25, 2004, the practice relating to issuance of a patent to an assignee was modified by requiring that, after payment of an issue fee, a request for a certificate of correction must be filed in order to obtain issuance of the patent to an assignee. Thus, where the assignment data is submitted after payment of the issue fee, the patent document will not include the assignment information. Therefore, as 37 CFR 3.81(b) was modified to provide for issuance of the patent to the assignee, the practice of waiving the rule (37 CFR 3.81(a)) under 37 CFR 1.183 is longer necessary and has been eliminated.

37 CFR 3.81(b), as modified, reads:

> Any request for issuance of an application in the name of the assignee submitted after the date of payment of the issue fee, and any request for a patent to be corrected to state the name of the assignee, must state that the assignment was submitted for recordation as set forth in § 3.11 before issuance of the patent, and must include a request for a certificate of correction under § 1.323 of this chapter (accompanied by the fee set forth in § 1.20(a)) and the processing fee set forth in § 1.17(i) of this chapter.

In other words, the request under 37 CFR 3.81(b) will be granted when:

(1) a request under 37 CFR 3.81 and the fee set forth in 37 CFR 1.17(i) are filed,

(2) the assignment was submitted for recordation prior to issuance of the patent, and
(3) a request for a certificate of correction and the fee set forth in 37 CFR 1.20(a) are submitted.

The above requirements have been met. Therefore, the request is granted.

The file is being forwarded to the Certificates of Correction Branch for issuance of the requested Certificate of Correction.

Telephone inquiries regarding this communication should be directed to Petitions Attorney Steven Brantley at (571) 272-3203.

Charles Steven Brantley
Senior Petitions Attorney
Office of Petitions

Pet. Dec.

UNITED STATES PATENT and TRADEMARK OFFICE
UNDER SECRETARY OF COMMERCE FOR INTELLECTUAL PROPERTY AND
DIRECTOR OF THE UNITED STATES PATENT AND TRADEMARK OFFICE
WASHINGTON, D.C. 20231
WWW.USPTO.GOV

Mailed: 6/17/05

Paper No.: 1

In re application of Nielsen et al
U.S. Patent No. 6,729,375
Issued: May 4, 2004
Application Number: 09/883,244
Filed: June 19, 2001
For: LABELLING APPARATUS AND METHOD

DECISION ON PETITION

This is a decision on the petition filed on March 7, 2005 to correct inventorship in a patent under 37 CFR 1.324.

Decision

Applicants are deemed to have fulfilled the requirements under 37 CFR 1.324 in that the petition is accompanied by: (1) Statements from the currently named inventors, including the inventor whose name is being added, agreeing to the change of inventorship and that the error in inventorship occurred without deceptive intent; (2) A statement from the assignee of the parties submitting statements under (1) above agreeing to the change of inventorship in the patent in compliance with 37 CFR 3.73(b); and (3) the fee set forth in 37 CFR 1.20(b).

The petition is **GRANTED**.

The file is being forwarded to Certificate of Corrections Branch for Issuance of a certificate adding Feipeng Zhao as a co-inventor with Peter C. Neilsen and Joseph Z. Sleiman.

Christopher A. Fiorilla
SPE AU 1734
Technology Center 1700
Chemical and Materials Engineering

SMART AND BIGGAR
438 UNIVERSITY AVENUE
SUITE 1500 BOX 111
TORONTO, CANADA M5G2K-8

PATENT

41928

IN THE UNITED STATES PATENT AND TRADEMARK OFFICE

In re Application of

Yukihiro MATSUMOTO et al.

Serial No.: 09/883,266

Filed: June 19, 2001

For: PRODUCTION PROCESS FOR WATER-ABSORBENT RESIN

Group Art Unit: 1713

Examiner: T. Zalukaeva

BEST AVAILABLE COPY

PETITION TO WITHDRAW HOLDING OF ABANDONMENT UNDER 37 C.F.R. 1.181(a) OR IN THE ALTERNATIVE PETITION TO REVIVE UNINTENTIONALLY ABANDONED APPLICATION UNDER 37 C.F.R. 1.137

Mail Stop Petition
Commissioner for Patents
P.O. Box 1450
Alexandria, VA 22313-1450

Sir:

In response to the November 6, 2003 Office communication enclosing a Notice of Abandonment for the above-identified application, Applicants hereby petition for withdrawal of the holding of abandonment. In the alternative, Applicants request revival of this application under 37 C.F.R. 1.137.

Applicants submit that the Notice of Abandonment is erroneous since a Request for Continued Examination (RCE) and an Amendment under 37 C.F.R. 1.116 responsive to the April 3, 2003 Office Action were timely filed at the U.S. Patent and Trademark Office (PTO) on July 3, 2003. Attached are copies of the Amendment, RCE and the corresponding date-stamped postcard, which clearly indicates that the documents were filed with the PTO on July 3, 2003. Accordingly, Applicants respectfully request withdrawal of the erroneous holding of abandonment for the above-identified application.

In the alternative to the Petition to Withdraw the Notice of Abandonment, Applicants hereby Petition to Revive this application as being unintentionally abandoned pursuant to 37 C.F.R. 1.137(b).

Applicants submit that the entire delay from the due date for the reply up to the date of this grantable Petition was unintentional. Copies of the RCE and Amendment are attached. Since this application was filed after June 8, 1995, no terminal disclaimer is required.

Pursuant to MPEP 711.03(c)(I), it is believed that no fee is required. However, the Commissioner is hereby authorized to charge any fees which may become due in connection with this communication or credit any overpayment to Deposit Account No. 18-2220.

Respectfully submitted,

Garrett V. Davis
Reg. No. 32,023

Roylance, Abrams, Berdo & Goodman, L.L.P.
1300 19th Street, N.W., Suite 600
Washington, D.C. 20036
(202) 659-9076

Dated: November 11, 2003

BEST AVAILABLE COPY

PAGE 3/17 * RCVD AT 11/12/2003 1:04:58 PM [Eastern Standard Time] * SVR:USPTO-EFXRF-1/3 * DNIS:8729048 * CSID:202 659 9344 * DURATION (mm-ss):05-16

BEST AVAILABLE COPY

Due Date 7-3-03 Today's Date 7-3-03

USSN/USP 09/883,266 RAB&G FILE NO. 41928 BY: GVD / gka

In Re Yukihiro MATSUMOTO et al.

For PRODUCTION PROCESS FOR WATER-ABSORBENT RESIN

The following was received in the U.S. Patent & Trademark Office on the date stamped hereon:

OIPE JC76 JUL 0 3 2003 PATENT & TRADEMARK OFFICE

- ☒ Check for $ 750.00
- ☐ Specification _____ pgs. _____ claims
- ☐ Combined Decl., Petition & Power
- ☐ Assignment
- ☐ Drawings _____ Sheets ☐ Formal ☐ Informal
- ☐ Small Entity Statement
- ☐ Claim for Priority & ☐ Document
- ☐ Information Disclosure Statement
- ☐ Trademark Application & _____ Specimens
- ☐ Rule 53(b) Appln. ☐ Rule 53(d) Appln. (CPA)

- ☒ Amendment ☐ Response
- ☐ Notice of Appeal
- ☐ Brief ☐ Req. Oral Hearing
- ☐ Issue Fee Transmittal
- ☐ Trademark Renewal Application
- ☐ Decl. of Use ☐ 8 ☐ 15
- ☐ Petition to Extend _____ mos./days
- ☐ Completion of Application
- ☒ Request for Continued Examination (RCE)
- ☐ Due Date Not Related To Response

Case Docket No.: **41928**

PATENT

In re Application of: **Yukihir MATSUMOTO et al.**

Serial No.: **09/883,266**

Filed: **June 19, 2001**

Patent Art Unit: **1713**

Examiner: **T. Zalukaeva**

For: **PRODUCTION PROCESS FOR WATER-ABSORBENT RESIN**

COMMISSIONER FOR PATENTS
P.O. Box 1450
Alexandria, VA 22313-1450

Transmitted herewith is an Amendment and RCE in the above-identified application:

☐ Applicant claims small entity status. See 37 CFR 1.27.

☐ No additional fee is required.

The fee has been calculated as shown below:

	CLAIMS REMAINING AFTER AMENDMENT	HIGHEST NO. PREVIOUSLY PAID FOR	PRESENT EXTRA	SMALL ENTITY RATE	SMALL ENTITY ADDIT. FEE	OTHER THAN A SMALL ENTITY RATE	OTHER THAN A SMALL ENTITY ADDIT. FEE
TOTAL	14	- 20 =	0	x 9 =	$	x 18 =	$
INDEP	3	- 3 =	0	x 40 =	$	x 80 =	$
☐ FIRST PRESENTATION OF MULT. DEP. CLAIM				+ 135 =	$	+ 270 =	$
If the difference in Col. 1 is less than zero, enter "0" in Col. 2				TOTAL	$	TOTAL	$

☒ The RCE fee of 750.00 under 37 CFR 1.17(e).

☐ Please charge my Deposit Account No. 18-2220 in the amount of $_____. A duplicate copy of this sheet is attached.

☒ A check in the amount of $ 750.00 is attached.

☒ The Commissioner is hereby authorized to charge payment of the following fees associated with this communication or credit any overpayment to Deposit Account No. 18-2220. A duplicate copy of this sheet is attached.

- ☒ Any additional excess claim fees under 37 C.F.R. § 1.16.
- ☒ Any additional patent application processing fees under 37 C.F.R. § 1.17.

Dated: July 3 2003

Roylance, Abrams, Berdo & Goodman, L.L.P.
1300 19th Street, N.W., Suite 600
Washington, D.C. 20036
(202) 659-9076

Garrett V. Davis
Attorney of Record
Reg. No. 32,023

UNITED STATES PATENT AND TRADEMARK OFFICE

COMMISSIONER FOR PATENTS
UNITED STATES PATENT AND TRADEMARK OFFICE
P.O. BOX 1450
ALEXANDRIA, VA 22313-1450
www.uspto.gov

Mailed: JAN 20 2004

spg
Paper Number 17

In re application of	:	
Yukihiro Matsumoto et al.	:	DECISION ON
Serial No. 09/883,266	:	PETITION
Filed: June 19, 2001	:	
For: PRODUCTION PROCESS FOR WATER-ABSORBENT	:	
RESIN	:	

This is a decision on the PETITION TO WITHDRAW HOLDING OF ABANDONMENT UNDER 37 C.F.R. 1.181(a) OR IN THE ALTERNATIVE PETITION TO REVIVE UNINTENTIONALLY ABANDONED APPLICATION UNDER 37 C.F.R. 1.137, filed November 12, 2003. The petition requests that the abandonment, as set forth in the Notice of Abandonment of November 6, 2003, for failure to timely file a proper reply to the Office letter mailed on April 3, 2003, be withdrawn since the applicants did timely file a reply on July 3, 2003. (Copies of the papers filed July 3, 2003 are attached to the instant petition, the copies include a REQUEST FOR CONTINUED EXAMINATION and an AMENDMENT.)

DECISION

The instant request has been accepted as a petition to withdraw the holding of abandonment under the provisions of 37 CFR 1.181 (no fee) - no abandonment-in-fact. A review of the evidence presented reveals that applicant's response was properly filed on July 3, 2003 as evidenced by the copy of the USPTO date-stamped return receipt postcard indicating receipt of the papers at the USPTO on July 3, 2003. A review of the USPTO financial records relating to the instant application further indicates that $750.00 was credited to the instant application file on July 8, 2003 with the method of payment by check with a USPTO receipt date of July 3, 2002.

Accordingly any holding of abandonment for failure to timely file a proper reply to the Office letter mailed on April 3, 2003 is hereby vacated and the application is returned to pending status. The application shall be forwarded to the Examiner for processing and entry of the papers originally filed July 3, 2003.

The Petition is **GRANTED**.

Jacqueline Stone, Director
Technology Center 1700
Chemical and Materials Engineering

ROYLANCE, ABRAMS, BERDO & GOODMAN, L.L.P.
1300 19TH STREET, N.W.
SUITE 600
WASHINGTON, DC 20036

UNITED STATES PATENT AND TRADEMARK OFFICE

COMMISSIONER FOR PATENTS
UNITED STATES PATENT AND TRADEMARK OFFICE
P.O. BOX 1450
ALEXANDRIA, VA 22313-1450
www.uspto.gov

Paper No. 16

WILLIAM J. BUNDREN, ESQ.
576 FARMINGTON ROAD, WEST
ACCOKEEK, MD 20607-9796

COPY MAILED

DEC 1 2 2003

OFFICE OF PETITIONS

In re Application of
Stiles et al.
Application No. 09/883,343
Filed: June 19, 2001
Attorney Docket No. C60007.1US

ON PETITION

This is a decision on the petition under 37 C.F.R. § 1.137(b), filed September 3, 2003, to revive the above-identified application.

The petition is **granted.**

The above-identified application became abandoned for failure to reply in a timely manner to the restriction requirement mailed September 3, 2002, which set a shortened statutory period for reply of one (1) month. No extensions of time under the provisions of 37 CFR 1.136(a) were timely obtained. Accordingly, the above-identified application became abandoned on October 4, 2002. A Notice of Abandonment was mailed on April 11, 2003.

Petitioner has met the requirements to revive the above-identified application pursuant to 37 CFR 1.137(b).

An extension of time under 37 CFR 1.136 must be filed prior to the expiration of the maximum extendable period for reply. See In re Application of S., 8 USPQ2d 1630, 1631 (Comm'r Pats. 1988). Accordingly, since the $985.00 extension of time fee submitted with the petition on September 3, 2003 was subsequent to the maximum extendable period for reply, this fee is unnecessary and will be credited to petitioner's deposit account as authorized.

The file is now being forwarded to Technology Center 1600 for further examination on the merits.

Telephone inquiries should be directed to Paralegal Liana Chase at (703) 306-0482.

Wan Laymon
Petitions Examiner
Office of Petitions
Office of the Deputy Commissioner
for Patent Examination Policy

UNITED STATES PATENT AND TRADEMARK OFFICE

#4

COMMISSIONER FOR PATENTS
UNITED STATES PATENT AND TRADEMARK OFFICE
WASHINGTON, D.C. 20231
www.uspto.gov

OLIFF & BERRIDGE, PLC
PO BOX 19928
ALEXANDRIA, VA 22320

COPY MAILED

AUG 2 2 2001

OFFICE OF PETITIONS

In re Application of
Griffith, Van Rafelghem, Russell, Hirsch
Application No. 09/883,347
Filed: June 19, 2001
Title: METHODS AND SYSTEMS FOR INTERFACING WIRED/WIRELESS HYBRID SYSTEMS

: DECISION GRANTING PETITION
: UNDER 37 CFR 1.47

This is in response to the "Petition Under 37 CFR 1.47(a)," filed June 19, 2001.

The petition is granted.

Petitioner has shown that the non-signing inventor has refused to join in the filing of the above-identified application.

The above-identified application and papers have been reviewed and found in compliance with 37 CFR 1.47(a). This application is hereby accorded Rule 1.47(a) status. As provided in Rule 1.47(c), this Office will forward notice of this application's filing to the non-signing inventor at the address given in the Declaration. Notice of the filing of this application will also be published in the Official Gazette.

The file is being forwarded to Office of Initial Patent Examining for further processing..

Telephone inquiries regarding this decision should be directed to Lesley Morris at (703) 306-0028.

for

Beverly M. Flanagan
Supervisory Petitions Examiner
Office of Petitions
Office of the Deputy Commissioner

UNITED STATES PATENT AND TRADEMARK OFFICE

COMMISSIONER FOR PATENTS
UNITED STATES PATENT AND TRADEMARK OFFICE
WASHINGTON, D.C. 20231
www.uspto.gov

Stefan Van Rafelghem
13562 Northbourne Drive
Centreville, VA 20120-1787

COPY MAILED

AUG 2 2 2001

OFFICE OF PETITIONS

In re Application of
Griffith, Van Rafelghem, Russell, Hirsch
Application No. 09/883,347
Filed: June 19, 2001
For: METHODS AND SYSTEMS FOR INTERFACING WIRED/WIRELESS HYBRID SYSTEMS

Dear Mr. Rafelghem:

You are named as a joint inventor in the above identified United States patent application, filed under the provisions of 35 U.S.C. 116 (United States Code), and 37 CFR 1.47(a), Rules of Practice in Patent Cases. Should a patent be granted on the application you will be designated therein as a joint inventor.

As a named inventor you are entitled to inspect any paper in the file wrapper of the application, order copies of all or any part thereof (at a prepaid cost per 37 CFR 1.19) or make your position of record in the application. Alternatively, you may arrange to do any of the preceding through a registered patent attorney or agent presenting written authorization from you. If you care to join the application, counsel of record (see below) would presumably assist you. Joining in the application would entail the filing of an appropriate oath or declaration by you pursuant to 37 CFR 1.63.

Telephone inquiries regarding this communication should be directed to Lesley Morris at (703) 306-0028. Requests for information regarding your application should be directed to the File Information Unit at (703) 308-2733. Information regarding how to pay for and order a copy of the application, or a specific paper in the application, should be directed to Certification Division at (703) 308-9726 or 1(800) 972-6382 (outside the Washington D.C. area).

for

Beverly M. Flanagan
Supervisory Petitions Examiner
Office of Petitions
Office of the Deputy Commissioner
for Patent Examination Policy

OLIFF & BERRIDGE, PLC
PO BOX 19928
ALEXANDRIA, VA 22320

#6
5/28/03

UNITED STATES PATENT AND TRADEMARK OFFICE

COMMISSIONER FOR PATENTS
UNITED STATES PATENT AND TRADEMARK OFFICE
WASHINGTON, D.C. 20231
www.uspto.gov

MAILED

MAY 2 8 2003

TECHNOLOGY CENTER 2100

Paper No. 6

ANTONELLI, TERRY, STOUT & KRAUS, LLP
1300 North Seventeenth Street
Suite 1800
Arlington, VA 22209

In re Application of: Son H. LAM, et al.	)	
Application No. 09/883,386	)	
Filed: June 19, 2001	)	**DECISION ON REQUEST FOR**
For: FAULT RESILIENT BOOTING FOR	)	**WITHDRAWAL AS ATTORNEY**
MULTIPROCESSOR SYSTEM	)	
USING APPLIANCE SERVER	)	
MANAGEMENT	)	

This is a decision on the Request To Withdraw from Representation filed May 5, 2003.

A grantable request to withdraw as attorney of record should indicate thereon the present mailing addresses of the attorney(s) who is/are withdrawing from the record and of the applicant. The request for withdrawal must be signed by every attorney seeking to withdraw or contain a clear indication that one attorney is signing on behalf of another/others. A request to withdraw will not be approved unless at least 30 (thirty) days would remain between the date of approval and the later of the expiration date of a time to file a response or the expiration date of the maximum time period which can be extended under 37 C.F.R. § 1. 136(a). The effective date of withdrawal being the date of decision and not the date of request. See M.P.E.P. § 402.06. 37 C.F.R. § 1.36 further requires that the applicant or patent owner be notified of the withdrawal of the attorney or agent.

The request is **GRANTED**.

All future communications from the Office will be directed to the below-listed address until otherwise notified by applicant. This correspondence address is provided by the withdrawn attorney(s). Applicant is reminded of the obligation to promptly notify the Patent and Trademark Office (Office) of any change in correspondence address to ensure receipt of all communications from the Office.

Vincent N. Trans
Special Programs Examiner
Technology Center 2100
Computer Architecture and Software
(703) 305-9750

cc: Schwegman, Lundberg, Woessner & Kluth P.A.
c/o Anne Richards
1600 TCF Tower
121 S. 8th Street
Minneapolis, MN 55402

UNITED STATES PATENT AND TRADEMARK OFFICE

COMMISSIONER FOR PATENTS
UNITED STATES PATENT AND TRADEMARK OFFICE
WASHINGTON, D.C. 20231
www.uspto.gov

Paper No. 3

ANTONELLI, TERRY, STOUT & KRAUS, LLP
1300 North Seventeenth Street
Suite 1800
Arlington, VA 22209

MAILED

JUL 22 2003

Technology Center 2100

In re Application of: Sundeep M. Bajikar	)	
Application No. 09/883,403	)	
Filed: June 19, 2001	)	**DECISION ON REQUEST FOR**
For: BLUETOOTH BASED SECURITY	)	**WITHDRAWAL AS ATTORNEY**
SYSTEM	)	

This is a decision on the Request To Withdraw from Representation filed June 23, 2003.

A grantable request to withdraw as attorney of record should indicate thereon the present mailing addresses of the attorney(s) who is/are withdrawing from the record and of the applicant. The request for withdrawal must be signed by every attorney seeking to withdraw or contain a clear indication that one attorney is signing on behalf of another/others. A request to withdraw will not be approved unless at least 30 (thirty) days would remain between the date of approval and the later of the expiration date of a time to file a response or the expiration date of the maximum time period which can be extended under 37 C.F.R. § 1. 136(a). The effective date of withdrawal being the date of decision and not the date of request. See M.P.E.P. § 402.06. 37 C.F.R. § 1.36 further requires that the applicant or patent owner be notified of the withdrawal of the attorney or agent.

The request is **GRANTED**.

All future communications from the Office will be directed to the below-listed address until otherwise notified by applicant. This correspondence address is provided by the withdrawn attorney(s). Applicant is reminded of the obligation to promptly notify the Patent and Trademark Office (Office) of any change in correspondence address to ensure receipt of all communications from the Office.

For

Vincent N. Trans
Special Programs Examiner
Technology Center 2100
Computer Architecture and Software
(703) 305-9750

cc: KENYON & KENYON
1500 K Street, N.W.
Suite 700
Washington, DC 20005-1257

UNITED STATES PATENT AND TRADEMARK OFFICE

COMMISSIONER FOR PATENTS
UNITED STATES PATENT AND TRADEMARK OFFICE
WASHINGTON, D.C. 20231
www.uspto.gov

Paper No. 4

FRANK CHAU
F CHAU & ASSOCIATES
SUITE 501
1900 HEMPSTEAD TURNPIKE
EAST MEADOW, NY 11554

COPY MAILED

SEP 1 4 2001

OFFICE OF PETITIONS

In re Application of	:	
John Chaco et al	:	
Application No. 09/883,424	:	NOTICE
Filed: June 18, 2001	:	
Attorney Docket No. 8438-12 DIV CON II	:	

This is a notice regarding your request for acceptance of a fee deficiency submission under 37 CFR 1.28. On September 1, 1998, the Court of Appeals for the Federal Circuit held that 37 CFR 1.28(c) is the sole provision governing the time for correction of the erroneous payment of the issue fee as a small entity. **See DH Technology v. Synergystex International, Inc. 154 F.3d 1333, 47 USPQ2d 1865 (Fed. Cir. Sept. 1, 1998).**

The Office no longer investigates or rejects original or reissue applications under 37 CFR 1.56. **1098 Off. Gaz. Pat. Office 502 (January 3, 1989)**. Therefore, nothing in this Notice is intended to imply that an investigation was done.

Your fee deficiency submission under 37 CFR 1.28 is hereby **ACCEPTED**.

Inquiries related to this communication should be directed to the Office of Petitions Staff at (703) 305-9285.

This file is being forwarded to Initial Patent Examination Division.

Wan Laymon

Wan Laymon
Petitions Examiner
Office of Petitions
Office of the Deputy Commissioner
for Patent Examination Policy

UNITED STATES PATENT AND TRADEMARK OFFICE

COMMISSIONER FOR PATENTS
UNITED STATES PATENT AND TRADEMARK OFFICE
P.O. BOX 1450
ALEXANDRIA, VA 22313-1450
WWW.USPTO.GOV

Paper No. 12

Infineon Technologies North America Corp.
c/o Siemens Corporation
Intellectual Property Department
186 Wood Avenue South
Iselin, NJ 08830

COPY MAILED

OCT 02 2003

OFFICE OF PETITIONS

In re Application of
Schroeder et al.
Application No. 09/883,437
Filed: June 18, 2001
Attorney Docket No. 01 P 10755 US (8055-31)

ON PETITION

This is a decision on the petition under 37 C.F.R. § 1.137(b), filed September 22, 2003, to revive the above-identified application.

The petition is **granted.**

This application became abandoned for failure to timely reply within three months to the non-final Office action mailed October 7, 2002. No extensions of time under the provisions of 37 CFR 1.136(a) were obtained. Accordingly, this application became abandoned on January 8, 2003. A Notice of Abandonment was mailed on June 23, 2003.

Petitioner has met the requirements to revive the above-identified application pursuant to 37 CFR 1.137(b).

There is no indication that the person signing the instant petition was ever given a power of attorney or authorization of agent to prosecute the above-identified application. If the person signing the instant petition desires to receive future correspondence regarding this application, the appropriate power of attorney or authorization of agent must be submitted. While a courtesy copy of this decision is being mailed to the person signing the instant petition, all future correspondence will be directed solely to the address currently of record until such time as appropriate instructions are received to the contrary.

It is not apparent whether the person signing the statement of unintentional delay was in a position to have firsthand or direct knowledge of the facts and circumstances of the delay at issue. Nevertheless, such statement is being treated as having been made as the result of a reasonable inquiry into the facts and circumstances of such delay.[1] In the event that such an inquiry has not been made, petitioner must make such an inquiry. If such inquiry results in the discovery that it is not correct that the entire delay in filing the required reply from the due date for the reply until the filing of a grantable petition pursuant to 37 CFR 1.137(b) was intentional, petitioner must notify

---

[1] See 37 CFR 10.18(b) and Changes to Patent Practice and Procedure; Final Rule Notice, 62 Fed. Reg. 53131, 53178 (October 10, 1997), 1203 Off. Gaz. Pat. Office 63, 103 (October 21, 1997).

the Office.

The file is now being forwarded to Technology Center 2800 for further examination on the merits.

Telephone inquiries should be directed to Paralegal Liana Chase at (703) 306-0482.

Frances Hicks

Frances Hicks
Petitions Examiner
Office of Petitions
Office of the Deputy Commissioner
for Patent Examination Policy

cc: Thomas W. McNally
F. CHAU & ASSOCIATES
1900 Hempstead Turnpike
Suite 501
East Meadow, NY 11554

UNITED STATES PATENT AND TRADEMARK OFFICE

COMMISSIONER FOR PATENTS
UNITED STATES PATENT AND TRADEMARK OFFICE
P.O. BOX 1450
ALEXANDRIA, VA 22313-1450
WWW.USPTO.GOV

Paper No. 10

W. THAD ADAMS III
ADAMS SCHWARTZ & EVANS P.A.
2180 TWO FIRST UNION CENTER
CHARLOTTE, NC 28282

COPY MAILED
JUL 2 2 2003
OFFICE OF PETITIONS

In re Application of	:	
Dave Kormos	:	
Application No. 09/883,461	:	ON PETITION
Filed: June 15, 2001	:	
Attorney Docket No. 2788/1	:	

This is a decision on the petition under 37 CFR 1.137(b), filed by facsimile transmission on July 8, 2003, to revive the above-identified application.

The petition is **GRANTED**.

The above-identified application became abandoned for failure to reply in a timely manner to the non-final Office action mailed May 7, 2002, which set a shortened statutory period for reply of one (1) month. No extensions of time under the provisions of 37 CFR 1.136(a) were obtained. Accordingly, the above-identified application became abandoned on June 8, 2002.

Pursuant to petitioner's authorization, Deposit Account No. 01-0265 was charged $650.00 for the petition to revive an unintentionally abandoned application.

Telephone inquiries concerning this decision should be directed to Wan Laymon at (703) 305-9282.

The application file is being forwarded to Technology Center AU 1762.

Wan Laymon
Wan Laymon
Petitions Examiner
Office of Petitions
Office of the Deputy Commissioner
for Patent Examination Policy

UNITED STATES PATENT AND TRADEMARK OFFICE

Commissioner for Patents
United States Patent and Trademark Office
Washington, D.C. 20231
www.uspto.gov

Paper No. 5

Peter Ludwig
Darby and Darby
805 Third Avenue
New York, NY 10022-7513

COPY MAILED

SEP 1 6 2002

OFFICE OF PETITIONS

In re Application of	:	
Dan Raphaeli, et al.	:	
Application No. 09/883,589	:	DECISION ON PETITION
Filed: June 18, 2001	:	UNDER 37 CFR 1.137(f)
Attorney Docket No. 2681/OJ490	:	

This is a decision on the petition filed August 12, 2002, to revive the instant nonprovisional application under the unintentional provisions of 37 CFR 1.137(f).

The petition is **DISMISSED**.

Any further petition to revive must be submitted within TWO (2) MONTHS from the mail date of this decision. Extensions of time under 37 CFR 1.136(a) are permitted. The reconsideration request should include a cover letter entitled "Petition under 37 CFR 1.137(f)." This is **not** a final agency action within the meaning of 5 U.S.C.§ 704.

A petition under 37 CFR 1.137(f) must be accompanied by:

(1) the reply which is met by notification of such filing in a foreign country or under a multinational treaty;

(2) the petition fee as set forth in 37 CFR 1.17(m); and

(3) a statement that the entire delay in filing the required reply from the due date for the reply until the filing of a grantable petition was unintentional.

This petition lacks item (1) above.

Petitioner filed the present petition because the instant nonprovisional application, allegedly, is the subject of an application filed in a foreign country. The U. S. Patent and Trademark Office (Office) was not notified of this filing within 45 days subsequent to the filing of the subject application in a foreign country. However, the date of the foreign filing has not been established and such a date is required to make a proper decision on petition. Therefore, it cannot be determined if this application is, in fact,

abandoned and if the present petition is necessary. Accordingly, petitioner must provide the date of the foreign filing to the Office.

The previous Request and Certification under 35 USC 122(b)(2)(B)(i) has been rescinded. A Corrected Filing Receipt which sets forth the projected publication date of December 26, 2002 accompanies this decision on petition.

The application file does not indicate a change of address has been filed in this case, although the address given on the petition differs from the address of record. A change of address should be filed in this case in accordance with MPEP 601.03. A courtesy copy of this decision is being mailed to the address noted on the petition. However, until otherwise instructed, all future correspondence regarding this application will be mailed solely to the address of record.

Further correspondence with respect to this matter should be addressed as follows:

By Express Mail: Assistant Commissioner for Patents
Box DAC
Washington, D.C. 20231

By First Class Mail: United States Patent and Trademark Office
P. O. Box 2327, Mail Stop DAC
Arlington, VA 22202

By facsimile: (703) 308-6916
Attn: Office of Petitions

By hand: Office of Petitions
2201 South Clark Place
Crystal Plaza 4, Suite 3C23
Arlington, VA 22202

Telephone inquiries concerning this decision should be directed to Marianne Morgan at (703) 306-3475.

Frances M. Hicks
Lead Petitions Examiner
Office of Petitions
Office of the Deputy Commissioner
for Patent Examination Policy

Attachment: Corrected Filing Receipt

cc: Howard Zaretsky
Zaretsky and Associates PC
8753 W. Runion Drive
Peoria, AZ 85382-6412

UNITED STATES PATENT AND TRADEMARK OFFICE

Commissioner for Patents
United States Patent and Trademark Office
Washington, D.C. 20231
www.uspto.gov

Paper No. 8

ZARETSKY & ASSOCIATES PC
8753 W RUNION DRIVE
PEORIA, AZ 85382-6412

COPY MAILED

OCT 0 4 2002

OFFICE OF PETITIONS

In re Application of Dan Raphaeli et al Application No. 09/883,589 Filed: Juen 18, 2001 Attorney Docket No. 12407.0019;2681/0J490	DECISION GRANTING PETITION UNDER 37 CFR 1.137(f)

This is a decision on the renewed petition, filed September 27, 2002, to revive the instant nonprovisional application under the unintentional provisions of 37 CFR 1.137(f).

The petition is **GRANTED**.

Petitioner states that the instant nonprovisional application is the subject of an application filed in a foreign country on June 18, 2002. However, the U.S. Patent and Trademark Office was unintentionally not notified of this filing within 45 days subsequent to the filing of the subject application in a foreign country.

In view of the above, this application became abandoned pursuant to 35 U.S.C. § 122(b)(2)(B)(iii) and 37 CFR 1.213(c) for failure to timely notify the Office of the filing of an application in a foreign country, or under a multilateral international agreement, that requires publication of applications 18 months after filing.

A petition under 37 CFR 1.137(f) must be accompanied by:

(1) the reply which is met by the notification of such filing in a foreign country or under a multinational treaty;

(2) the petition fee as set forth in 37 CFR 1.17(m); and

(3) a statement that the entire delay in filing the required reply from the due date of the reply until the filing of a grantable petition was unintentional.

The instant petition has been found to be in compliance with 37 CFR 1.137(f). Accordingly, the failure to timely notify the Office of a foreign or international filing within 45 days after the date of filing of such foreign or international application as provided by 35 U.S.C. § 122(b)(2)(B)(iii) and 37 CFR 1.213(c) is accepted as having been unintentionally delayed.

Any inquiries concerning this decision may be directed to the undersigned at (703) 305-8680.

This application is being forwarded to Technology Center Art Unit 2663 for examination in due course.

Frances Hicks
Petitions Examiner
Office of Petitions
Office of the Deputy Commissioner
for Patent Examination Policy

ATTACHMENT: Corrected Filing Receipt

UNITED STATES PATENT AND TRADEMARK OFFICE

COMMISSIONER FOR PATENTS
UNITED STATES PATENT AND TRADEMARK OFFICE
P.O. BOX 1450
ALEXANDRIA, VA 22313-1450
www.uspto.gov

Zaretsky Patent Group, PC
17505 N 79th Ave, Ste 211
Glendale, AZ 85308-8726

COPY MAILED

JUN 0 9 2008

In re Application of	:	
Dan Raphaeli, et. al.	:	
Application No. 09/883,589	:	DECISION ON PETITION
Filed: June 18, 2001	:	
Attorney Docket No. 12407.0019	:	

This is a decision on the petition under 37 CFR 1.137(b), filed on July 18, 2007, to revive the above-identified application.

The application became abandoned for failure to timely reply to the non-final Office action mailed on October 5, 2005. A Notice of Abandonment was mailed on June 26, 2006.

The petition satisfies the requirements of 37 CFR 1.137(b) in that petitioner has supplied (1) the reply in the form of an amendment; (2) the petition fee of $1,500; and (3) a proper statement of unintentional delay. Therefore, the petition is **GRANTED**.

The file does not indicate a change of address has been submitted, although the address given on the petition differs from the address of record. If appropriate, a change of address should be filed in accordance with MPEP 601.03. A courtesy copy of this decision is being mailed to the address given on the petition; however, the Office will mail all future correspondence solely to the address of record.

This application file is being referred to Technology Center Art Unit 2616 for further processing.

Telephone inquiries concerning this decision should be directed to the undersigned at (571) 272-3226.

Andrea Smith
Petitions Examiner
Office of Petitions

cc: Howard Zaretsky
8753 W Runion Drive
Peoria, AZ 85382

UNITED STATES PATENT AND TRADEMARK OFFICE

COMMISSIONER FOR PATENTS
UNITED STATES PATENT AND TRADEMARK OFFICE
P.O. BOX 1450
ALEXANDRIA, VA 22313-1450
www.uspto.gov

Paper No. 13

Schlumberger Technology Corporation
14910 Airline Road
P.O. Box 1590
Rosharon, TX 77583-1590

COPY MAILED
MAR 0 3 2004
OFFICE OF PETITIONS

In re Application of

Pringle, et al.

Application No. 09/883,595

Filed: June 18, 2001

Attorney Docket No. 69.0096CIP

DECISION ON PETITION

This is a decision on the petition under 37 CFR 1.137(b), filed February 20, 2004, to revive the above-identified application.

The petition is **GRANTED**.

The above-cited application became abandoned for failure to reply in a timely manner to the final Office action mailed June 13, 2004, which set a shortened statutory period for reply of three (3) months. A proper response to the final Office action was not received within the allowable period. Accordingly, the application became abandoned on September 14, 2004. A Notice of Abandonment was mailed on February 9, 2004.

The Request for Continued Examination filed February 20, 2004, is noted and made of record.

The application is being forwarded to Technology Center 3600 for further processing.

Telephone inquiries concerning this decision should be directed to the undersigned at (703) 305-0010.

Kenya A. McLaughlin
Petitions Attorney
Office of Petitions

UNITED STATES PATENT AND TRADEMARK OFFICE

Commissioner for Patents
United States Patent and Trademark Office
P.O. Box 1450
Alexandria, VA 22313-1450
www.uspto.gov

Blakely Sokoloff Taylor & Zafman
12400 Wilshire Boulevard
Seventh Floor
Los Angeles, C 90025-1030

COPY MAILED
SEP 19 2006
OFFICE OF PETITIONS

In re Application of :

Pavita Subramaniam et al. :
Application No. 09/883,598 : DECISION ON PETITION
Filed: June 18, 2001 : TO WITHDRAW
Attorney Docket No. 005306.P033 : FROM RECORD

This is a decision on the Request to Withdraw as attorney or agent of record under 37 C.F.R. § 1.36(b), filed July 3, 2006.

The request is **NOT APPROVED**.

A grantable request to withdraw as attorney/agent of record must be signed by every attorney/agent seeking to withdraw or contain a clear indication that one attorney is signing on behalf of another/others. A request to withdraw will not be approved unless at least 30 (thirty) days would remain between the date of approval and the later of the expiration date of a time to file a response or the expiration date of the maximum time period which can be extended under 37 C.F.R. § 1.136(a).

The request cannot be approved because no reasons for withdrawal have been provided. The Office cannot, at this time, determine whether practitioner's request is one of the mandatory or permissive reasons enumerated in 37 CFR 10.40. Any subsequent requests must include reasons for withdrawal. Please note that there is a space provided for on PTO/SB/83 (Request to Withdraw as Attorney or Agent) to supply practitioner's reasons.

All future communications from the Office will continue to be directed to the above-listed address until otherwise notified by applicant.

Telephone inquiries concerning this decision should be directed to Terri Williams at 571-272- 2991.

David Bucci
Petitions Examiner
Office of Petitions

cc: **Sam Campbell**
Campbell, Stephenson Asocolese, LLP
4807 Spicewood Spring Road
Bldg. 4, Suite 201
Austin, TX 78759

UNITED STATES PATENT AND TRADEMARK OFFICE

Commissioner for Patents
United States Patent and Trademark Office
P.O. Box 1450
Alexandria, VA22313-1450
www.uspto.gov

CSA LLP
4807 SPICEWOOD SPRINGS RD.
BLDG. 4, SUITE 201
AUSTIN TX 78759

COPY MAILED

MAR 2 6 2007

OFFICE OF PETITIONS

In re Application of
Pavitra Subramaniam et al.
Application No. 09/883,598
Filed: June 18, 2001
Attorney Docket No. OIC0256US

DECISION GRANTING PETITION

This is a decision on the petition, filed October 4, 2006 , which is being treated as a petition under 37 CFR 1.137(b) to revive the instant nonprovisional application for failure to timely notify the U.S. Patent and Trademark (USPTO) of the filing of an application in a foreign country, or under a multinational treaty that requires publication of applications eighteen months after filing. *See* 37 CFR 1.137(f).

The petition is **GRANTED**.

Petitioner states that the present nonprovisional application is the subject of a foreign or international application filed on June 17, 2002. However, the U.S. Patent and Trademark Office was unintentionally not notified of this filing within 45 days subsequent to the filing of the subject application in a foreign country.

In view of the above, this application became abandoned pursuant to 35 U.S.C. § 122(b)(2)(B)(iii) and 37 CFR 1.213(c) for failure to timely notify the Office of the filing of an application in a foreign country, or under a multilateral international agreement, that requires publication of applications 18 months after filing.

A petition under 37 CFR 1.137(f) must be accompanied by:

(1) the reply which is met by the notification of such filing in a foreign country or under a multinational treaty;

(2) the petition fee as set forth in 37 CFR 1.17(m); and

(3) a statement that the entire delay in filing the required reply from the due date of the reply until the filing of a grantable petition was unintentional.

The present petition has been found to be in compliance with 37 CFR 1.137(f).

Accordingly, the failure to timely notify the Office of a foreign or international filing within 45 days after the date of filing of such foreign or international application as provided by 35 U.S.C. § 122(b)(2)(B)(I) has been rescinded. The projected publication date is July 5, 2007 and a copy of the communication regarding rescission is included herein.

The petition fee in the amount of $1500.00 has been applied to the finance records for this application.

This matter is being referred to the Publishing Division.

Telephone inquiries related to this decision should be directed to the undersigned Petitions Attorney at (571) 272-3212.

Patricia Faison-Ball

Patricia Faison-Ball
Senior Petitions Attorney
Office of Petitions

ATTACHMENT: Communication Regarding Rescission of Nonpublication Request And/or Notice of Foreign Filing

UNITED STATES PATENT AND TRADEMARK OFFICE

UNITED STATES DEPARTMENT OF COMMERCE
United States Patent and Trademark Office
Address: COMMISSIONER FOR PATENTS
P.O. Box 1450
Alexandria, Virginia 22313-1450
www.uspto.gov

APPLICATION NUMBER	FILING/RECEIPT DATE	FIRST NAMED APPLICANT	ATTY. DOCKET NO.
09/883,598	06/18/2001	Pavitra Subramaniam	OIC0256US

CONFIRMATION NO. 1999

60975
CSA LLP
4807 SPICEWOOD SPRINGS RD.
BLDG. 4, SUITE 201
AUSTIN, TX 78759

Date Mailed: 03/26/2007

Communication Regarding Rescission Of Nonpublication Request and/or Notice of Foreign Filing

Applicant's rescission of the previously-filed nonpublication request and/or notice of foreign filing is acknowledged. The paper has been reflected in the Patent and Trademark Office's (USPTO's) computer records so that the earliest possible projected publication date can be assigned.

The projected publication date is 07/05/2007.

If applicant rescinded the nonpublication request before or on the date of "foreign filing,"[1] then no notice of foreign filing is required.

If applicant foreign filed the application after filing the above application and before filing the rescission, and the rescission did not also include a notice of foreign filing, then a notice of foreign filing (not merely a rescission) is required to be filed within 45 days of the date of foreign filing. See 35 U.S.C. § 122(b)(2)(B)(iii), and Clarification of the United States Patent and Trademark Office's Interpretation of the Provisions of 35 U.S.C. § 122(b)(2)(B)(ii)-(iv), 1272 Off. Gaz. Pat. Office 22 (July 1, 2003).

If a notice of foreign filing is required and is not filed within 45 days of the date of foreign filing, then the application becomes abandoned pursuant to 35 U.S.C. § 122(b)(2)(B)(iii). In this situation, applicant should either file a petition to revive or notify the Office that the application is abandoned. See 37 CFR 1.137(f). Any such petition to revive will be forwarded to the Office of Petitions for a decision. Note that the filing of the petition will not operate to stay any period of reply that may be running against the application.

Questions regarding petitions to revive should be directed to the Office of Petitions at (571) 272-3282. Questions regarding publications of patent applications should be directed to the patent application publication hotline at (703) 605-4283 or by e-mail pgpub@uspto.gov.

[1] Note, for purpose of this notice, that "foreign filing" means "filing an application directed to the same invention in another country, or under a multilateral international agreement, that requires publication of applications 18 months after filing".

UNITED STATES PATENT AND TRADEMARK OFFICE

UNITED STATES DEPARTMENT OF COMMERCE
United States Patent and Trademark Office
Address: COMMISSIONER FOR PATENTS
P.O. Box 1450
Alexandria, Virginia 22313-1450
www.uspto.gov

APPLICATION NUMBER	FILING OR 371 (c) DATE	FIRST NAMED APPLICANT	ATTY. DOCKET NO./TITLE
09/883,598	06/18/2001	Pavitra Subramaniam	5306P033

CONFIRMATION NO. 1999

OC000000023088599

60975
CSA LLP
4807 SPICEWOOD SPRINGS RD.
BLDG. 4, SUITE 201
AUSTIN, TX 78759

Date Mailed: 03/26/2007

NOTICE OF ACCEPTANCE OF POWER OF ATTORNEY

This is in response to the Power of Attorney filed 09/11/2006.

The Power of Attorney in this application is accepted. Correspondence in this application will be mailed to the above address as provided by 37 CFR 1.33.

Patricia Faison-Ball

Office of Initial Patent Examination (571) 272-4000, or 1-800-PTO-9199
OFFICE COPY

UNITED STATES PATENT AND TRADEMARK OFFICE

UNITED STATES DEPARTMENT OF COMMERCE
United States Patent and Trademark Office
Address: COMMISSIONER FOR PATENTS
P.O. Box 1450
Alexandria, Virginia 22313-1450
www.uspto.gov

APPLICATION NUMBER	FILING OR 371 (c) DATE	FIRST NAMED APPLICANT	ATTY. DOCKET NO./TITLE
09/883,598	06/18/2001	Pavitra Subramaniam	5306P033

CONFIRMATION NO. 1999

OC000000023088586

8791
BLAKELY SOKOLOFF TAYLOR & ZAFMAN
12400 WILSHIRE BOULEVARD
SEVENTH FLOOR
LOS ANGELES, CA 90025-1030

Date Mailed: 03/26/2007

NOTICE REGARDING CHANGE OF POWER OF ATTORNEY

This is in response to the Power of Attorney filed 09/11/2006.

- The Power of Attorney to you in this application has been revoked by the assignee who has intervened as provided by 37 CFR 3.71. Future correspondence will be mailed to the new address of record(37 CFR 1.33).

CSA LLP
4807 Spicewood Springs Rd.
BLDG. 4, Suite 201
Austin, TX 78759

Patricia Faison-Ball

Office of Initial Patent Examination (571) 272-4000, or 1-800-PTO-9199
NEW ATTORNEY/AGENT COPY

UNITED STATES PATENT AND TRADEMARK OFFICE

Commissioner for Patents
United States Patent and Trademark Office
P.O. Box 1450
Alexandria, VA 22313-1450
www.uspto.gov

BLAKELY SOKOLOFF TAYLOR & ZAFMAN
12400 WILSHIRE BOULEVARD
SEVENTH FLOOR
LOS ANGELES CA 90025-1030

COPY MAILED

AUG 2 1 2006

OFFICE OF PETITIONS

In re Application of	:	
Subramaniam, et al.	:	
Application No. 09/883,623	:	DECISION ON PETITION
Filed: June 18, 2001	:	TO WITHDRAW
Attorney Docket No. 005306.P016	:	FROM RECORD
	:	

This is a decision on the Request to Withdraw as attorney or agent of record under 37 C.F.R. § 1.36(b), filed May 2, 2006.

The request is **NOT APPROVED**.

A grantable request to withdraw as attorney/agent of record must be signed by every attorney/agent seeking to withdraw or contain a clear indication that one attorney is signing on behalf of another/others. A request to withdraw will not be approved unless at least 30 (thirty) days would remain between the date of approval and the later of the expiration date of a time to file a response or the expiration date of the maximum time period which can be extended under 37 C.F.R. § 1.136(a).

The request cannot be approved because no reasons for withdrawal have been provided. The Office cannot, at this time, determine whether practitioner's request is one of the mandatory or permissive reasons enumerated in 37 CFR 10.40. Any subsequent requests must include reasons for withdrawal. Please note that there is a space provided for on PTO/SB/83 (Request to Withdraw as Attorney or Agent) to supply practitioner's reasons.

All future communications from the Office will continue to be directed to the above-listed address until otherwise notified by applicant.

Telephone inquiries concerning this decision should be directed to April Wise at 571-272-1642.

Denise Pothier
Petitions Examiner
Office of Petitions

cc: Sam Campbell
Campbell, Stephenson Ascoclese, LLP
4807 Spicewood Spring Road
Bldg. 4, Suite 201
Austin, TX 78759

UNITED STATES PATENT AND TRADEMARK OFFICE

COMMISSIONER FOR PATENTS
UNITED STATES PATENT AND TRADEMARK OFFICE
P.O. BOX 1450
ALEXANDRIA, VA 22313-1450
www.uspto.gov

CSA LLP
4807 SPICEWOOD SPRINGS RD.
BLDG. 4, SUITE 201
AUSTIN, TX 78759

COPY MAILED
FEB 0 2 2007
OFFICE OF PETITIONS

In re Application of :
Pavitra Subramaniam, et al. :
Application No. 09/883,623 : DECISION ON PETITION
Filed: June 18, 2001 : UNDER 37 CFR 1.137(b)
Attorney Docket No. OIC0043US :

This is a decision on the petition, filed October 4, 2006, which is being treated as a petition under 37 CFR 1.137(b) to revive the instant nonprovisional application for failure to timely notify the U.S. Patent and Trademark (USPTO) of the filing of an application in a foreign country, or under a multinational treaty that requires publication of applications eighteen months after filing. *See* 37 CFR 1.137(f).

The petition is **GRANTED**.

Petitioner states that the instant nonprovisional application is the subject of an application filed in an eighteen-month publication country on June 17, 2002. However, the USPTO was unintentionally not notified of this filing within 45 days subsequent to the filing of the subject application in an eighteen-month publication country.

In view of the above, this application became abandoned pursuant to 35 U.S.C. § 122(b)(2)(B)(iii) and 37 CFR 1.213(c) for failure to timely notify the Office of the filing of an application in a foreign country or under a multilateral international agreement that requires publication of applications 18 months after filing.

A petition to revive an application abandoned pursuant to 35 U.S.C. 122(b)(2)(B)(iii) for failure to notify the USPTO of a foreign filing must be accompanied by:

(1) the required reply which is met by the notification of such filing in a foreign country or under a multinational treaty;
(2) the petition fee as set forth in 37 CFR 1.17(m); and
(3) a statement that the entire delay in filing the required reply from the due date of the reply until the filing of a grantable petition was unintentional.

The petition is found to be in compliance with 37 CFR 1.137(b). Accordingly, the failure to timely notify the USPTO of a foreign or international filing within 45 days after the date of filing of such foreign or international application as provided by 35 U.S.C. § 122(b)(2)(B)(iii) and 37 CFR 1.213(c) is accepted as having been unintentionally delayed.

The previous Request and Certification under 35 U.S.C. § 122(b)(2)(B)(i) has been rescinded. A Notice Regarding Rescission of Nonpublication Request which sets forth the projected publication date of May 10, 2007 accompanies this decision on petition.

Telephone inquiries concerning this decision should be directed to the undersigned at (571) 272-3204.

This application is being referred to Technology Center Art Unit 2164 for further prosecution.

Sherry D. Brinkley
Petitions Examiner
Office of Petitions

ATTACHMENT: Notice Regarding Rescission of Nonpublication Request

UNITED STATES PATENT AND TRADEMARK OFFICE

UNITED STATES DEPARTMENT OF COMMERCE
United States Patent and Trademark Office
Address: COMMISSIONER FOR PATENTS
P.O. Box 1450
Alexandria, Virginia 22313-1450
www.uspto.gov

APPLICATION NUMBER	FILING/RECEIPT DATE	FIRST NAMED APPLICANT	ATTY. DOCKET NO.
09/883,623	06/18/2001	Pavitra Subramaniam	OIC0043US

CONFIRMATION NO. 4377

60975
CSA LLP
4807 SPICEWOOD SPRINGS RD.
BLDG. 4, SUITE 201
AUSTIN, TX 78759

Date Mailed: 02/01/2007

Communication Regarding Rescission Of Nonpublication Request and/or Notice of Foreign Filing

Applicant's rescission of the previously-filed nonpublication request and/or notice of foreign filing is acknowledged. The paper has been reflected in the Patent and Trademark Office's (USPTO's) computer records so that the earliest possible projected publication date can be assigned.

The projected publication date is 05/10/2007.

If applicant rescinded the nonpublication request before or on the date of "foreign filing,"[1] then no notice of foreign filing is required.

If applicant foreign filed the application after filing the above application and before filing the rescission, and the rescission did not also include a notice of foreign filing, then a notice of foreign filing (not merely a rescission) is required to be filed within 45 days of the date of foreign filing. See 35 U.S.C. § 122(b)(2)(B)(iii), and Clarification of the United States Patent and Trademark Office's Interpretation of the Provisions of 35 U.S.C. § 122(b)(2)(B)(ii)-(iv), 1272 Off. Gaz. Pat. Office 22 (July 1, 2003).

If a notice of foreign filing is required and is not filed within 45 days of the date of foreign filing, then the application becomes abandoned pursuant to 35 U.S.C. § 122(b)(2)(B)(iii). In this situation, applicant should either file a petition to revive or notify the Office that the application is abandoned. See 37 CFR 1.137(f). Any such petition to revive will be forwarded to the Office of Petitions for a decision. Note that the filing of the petition will not operate to stay any period of reply that may be running against the application.

Questions regarding petitions to revive should be directed to the Office of Petitions at (571) 272-3282. Questions regarding publications of patent applications should be directed to the patent application publication hotline at (703) 605-4283 or by e-mail pgpub@uspto.gov.

[1] Note, for purpose of this notice, that "foreign filing" means "filing an application directed to the same invention in another country, or under a multilateral international agreement, that requires publication of applications 18 months after filing".

UNITED STATES PATENT AND TRADEMARK OFFICE

COMMISSIONER FOR PATENTS
P.O. BOX 1450
ALEXANDRIA, VA 22313-1450
www.uspto.gov

JUL 24 2003

Paper No. 8

In re Application of
M. Weldon Rogers, III *et al*
Application No. 09/883,653
Filed: June 18, 2001
Attorney Docket No. 18678-00009

: DECISION ON PETITION

The papers filed by facsimile transmission on May 28, 2003 are being treated as a petition by which petitioners request withdrawal of the holding that this application stands abandoned for failure to timely file a proper reply to the Office letter mailed on October 1, 2002. The petition is considered under 37 CFR 1.181 and no fee is required.

The petition is granted.

Petitioners are advised to take note that the amendment, the petition, and the post card receipt all have an incorrect application number thereon. The evidence submitted with the petition has been accepted as being directed to the instant application based upon counsel's docket number, and the inventors' name. Properly headed correspondence, being more easily associated with the proper application file, is less likely to result in the abandonment.

Petitioners allege that a timely reply to the Office letter in question was in fact filed on October 15, 2002. Petitioners support this allegation by including a copy of the reply, and a copy of a filing receipt for the reply which shows that the reply was received in the Office on October 15, 2002. In view of this evidence, it is clear that the application is not abandoned.

Accordingly, the Notice of Abandonment is hereby vacated, the holding of abandonment is withdrawn, and the application is restored to pending status. The application is being forwarded to the examiner for action on the reply filed on October 15, 2002.

PETITION GRANTED.

E. Rollins-Cross, Director, Patent
Examining Groups 3710 and 3720

John S. Beulick
Armstrong Teasdale LLP
Suite 2600
One Metropolitan Square
St. Louis, MO 63102

SPE T. McKelvey

SPE RESPONSE FOR CERTIFICATE OF CORRECTION

Paper No.: _____

DATE : 4/27/06

TO SPE OF : ART UNIT 1655

SUBJECT : Request for Certificate of Correction for Appl. No.: 09/883654 Patent No.: 6787240

Please respond to this request for a certificate of correction within 7 days.

Please review the requested changes/corrections as shown in the **COCIN** document(s) in the IFW application image. No new matter should be introduced, nor should the scope or meaning of the claims be changed.

Please complete the response (see below) and forward the completed response to scanning using document code **COCX**.

Lamonte M. Newsome
Certificates of Correction Branch
703-308-9390 ext. 112

Thank You For Your Assistance

The request for issuing the above-identified correction(s) is hereby:
Note your decision on the appropriate box.

- ☐ **Approved** — All changes apply.
- ☒ **Approved in Part** — Specify below which changes **do not** apply.
- ☐ **Denied** — State the reasons for denial below.

Comments: The change to column 10, claim 11 would change the scope and meaning of the claim. Do not apply changes to column 10, line 13, claim 11. The other is OK.

SPE

1771
Art Unit

Under the Paperwork Reduction Act of 1995, no persons are required to respond to a collection of information unless it displays valid OMB control number.

PETITION TO ACCEPT UNINTENTIONALLY DELAYED PAYMENT OF MAINTENANCE FEE IN AN EXPIRED PATENT (37 CFR 1.378(c))

Patent Number	Issue Date (YYYY-MM-DD)	Application Number	Filing Date (YYYY-MM-DD)	Docket Number (if applicable)
6,467,824	2002-10-22	09883661	2001-06-16	1015-014

CAUTION: Maintenance fee (and surcharge, if any) payment must correctly identify: (1) the patent number and (2) the application number of the actual U.S. application leading to issuance of that patent to ensure the fee(s) is/are associated with the correct patent. 37 CFR 1.366(c) and (d).

SMALL ENTITY
☒ Patentee claims, or has previously claimed, small entity status. See 37 CFR 1.27.

LOSS OF ENTITLEMENT TO SMALL ENTITY STATUS
☐ Patentee is no longer entitled to small entity status. See 37 CFR 1.27(g)

NOT Small Entity		Small Entity	
Fee	Code	Fee	Code
○ 3 ½ year	(1551)	◉ 3 ½ year	(2551)
○ 7 ½ year	(1552)	○ 7 ½ year	(2552)
○ 11 ½ year	(1553)	○ 11 ½ year	(2553)

SURCHARGE
The surcharge required by 37 CFR 1.20(i)(2) (Fee Code 1558) must be paid as a condition of accepting unintentionally delayed payment of the maintenance fee.

MAINTENANCE FEE (37 CFR 1.20(e)-(g))
The appropriate maintenance fee must be submitted with this petition.

STATEMENT
THE UNDERSIGNED CERTIFIES THAT THE DELAY IN PAYMENT OF THE MAINTENANCE FEE TO THIS PATENT WAS UNINTENTIONAL

PETITIONER(S) REQUEST THAT THE DELAYED PAYMENT OF THE MAINTENANCE FEE BE ACCEPTED AND THE PATENT REINSTATED

THIS PORTION MUST BE COMPLETED BY THE SIGNATORY OR SIGNATORIES

37 CFR 1.378(d) states: "Any petition under this section must be signed by an attorney or agent registered to practice before the Patent and Trademark Office, or by the patentee, the assignee, or other party in interest."

I certify, in accordance with 37 CFR 1.4(d)(4) that I am

◉ An attorney or agent registered to practice before the Patent and Trademark Office

○ A sole patentee

○ A joint patentee; I certify that I am authorized to sign this submission on behalf of all the other patentees.

○ A joint patentee; all of whom are signing this e-petition

○ The assignee of record of the entire interest

Patent Practitioner			
A signature of the applicant or representative is required in accordance with 37 CFR 1.33 and 10.18. Please see 37 CFR 1.4(d) for the form of the signature			
Signature	/Mikio Ishimaru/	Date (YYYY-MM-DD)	2007-05-23
Name	Mikio Ishimaru	Registration Number	27449

This collection of information is required by 37 CFR 1.378(c). The information is required to obtain or retain a benefit by the public which is to file (and by the USPTO to process) an application. Confidentiality is governed by 35 U.S.C. 122 and 37 CFR 1.11 and 1.14. This collection is estimated to take 1 hour to complete, including gathering, preparing, and submitting the completed application form to the USPTO. Time will vary depending upon the individual case. Any comments on the amount of time you require to complete this form and/ or suggestions for reducing this burden, should be sent to the Chief Information Officer, U.S. Patent and Trademark Office, U.S. Department of Commerce, P.O. Box 1450, Alexandria, VA 22313-1450. DO NOT SEND FEES OR COMPLETED FORMS TO THIS ADDRESS. **This form can only be used when in conjunction with EFS-Web. If this form is mailed to the USPTO, it may cause delays in reinstating the patent.**

Privacy Act Statement

The Privacy Act of 1974 (P.L. 93-579) requires that you be given certain information in connection with your submission of the attached form related to a patent application or patent. Accordingly, pursuant to the requirements of the Act, please be advised that: (1) the general authority for the collection of this information is 35 U.S.C. 2(b)(2); (2) furnishing of the information solicited is voluntary; and (3) the principal purpose for which the information is used by the U.S. Patent and Trademark Office is to process and/or examine your submission related to a patent application or patent. If you do not furnish the requested information, the U.S. Patent and Trademark Office may not be able to process and/or examine your submission, which may result in termination of proceedings or abandonment of the application or expiration of the patent.

The information provided by you in this form will be subject to the following routine uses:

1. The information on this form will be treated confidentially to the extent allowed under the Freedom of Information Act (5 U.S.C. 552) and the Privacy Act (5 U.S.C. 552a). Records from this system of records may be disclosed to the Department of Justice to determine whether the Freedom of Information Act requires disclosure of these record s.

2. A record from this system of records may be disclosed, as a routine use, in the course of presenting evidence to a court, magistrate, or administrative tribunal, including disclosures to opposing counsel in the course of settlement negotiations.

3. A record in this system of records may be disclosed, as a routine use, to a Member of Congress submitting a request involving an individual, to whom the record pertains, when the individual has requested assistance from the Member with respect to the subject matter of the record.

4. A record in this system of records may be disclosed, as a routine use, to a contractor of the Agency having need for the information in order to perform a contract. Recipients of information shall be required to comply with the requirements of the Privacy Act of 1974, as amended, pursuant to 5 U.S.C. 552a(m).

5. A record related to an International Application filed under the Patent Cooperation Treaty in this system of records may be disclosed, as a routine use, to the International Bureau of the World Intellectual Property Organization, pursuant to the Patent Cooperation Treaty.

6. A record in this system of records may be disclosed, as a routine use, to another federal agency for purposes of National Security review (35 U.S.C. 181) and for review pursuant to the Atomic Energy Act (42 U.S.C. 218(c)).

7. A record from this system of records may be disclosed, as a routine use, to the Administrator, General Services, or his/her designee, during an inspection of records conducted by GSA as part of that agency's responsibility to recommend improvements in records management practices and programs, under authority of 44 U.S.C. 2904 and 2906. Such disclosure shall be made in accordance with the GSA regulations governing inspection of records for this purpose, and any other relevant (i.e., GSA or Commerce) directive. Such disclosure shall not be used to make determinations about individuals.

8. A record from this system of records may be disclosed, as a routine use, to the public after either publication of the application pursuant to 35 U.S.C. 122(b) or issuance of a patent pursuant to 35 U.S.C. 151. Further, a record may be disclosed, subject to the limitations of 37 CFR 1.14, as a routine use, to the public if the record was filed in an application which became abandoned or in which the proceedings were terminated and which application is referenced by either a published application, an application open to public inspections or an issued patent.

9. A record from this system of records may be disclosed, as a routine use, to a Federal, State, or local law enforcement agency, if the USPTO becomes aware of a violation or potential violation of law or regulation.

UNITED STATES PATENT AND TRADEMARK OFFICE

Commissioner for Patents
United States Patent and Trademark Office
P.O. Box 1450
Alexandria, VA 22313-1450
www.uspto.gov

In re Patent No. 6467824
Issue Date: October 22,2002
Application No. 09883661
Filed: June 16,2001
Attorney Docket No. 1015-014

:
:DECISION GRANTING PETITION
:UNDER 37 CFR 1.378(c)
:

This is a decision on the electronic petition, filed May 23,2007 ,under 37 CFR 1.378(c) to accept the unintentionally delayed payment of the 3.5 year maintenance fee for the above-identified patent.

The petition is GRANTED.

The maintenance fee is accepted, and the above-identified patent reinstated as of May 23,2007 . This decision also constitutes notice that the fee has been accepted. An electronic copy of the petition and this decision has been created as an entry in an Image File Wrapper. Nevertheless, petitioner should print and retain an independent copy

Telephone inquires related to this electronic decision should be directed to the Electronic Business Center at 1-866-217-9197.

Under the Paperwork Reduction Act of 1995, no persons are required to respond to a collection of information unless it displays valid OMB control number.

PETITION TO ACCEPT UNINTENTIONALLY DELAYED PAYMENT OF MAINTENANCE FEE IN AN EXPIRED PATENT (37 CFR 1.378(c))

Patent Number	Issue Date (YYYY-MM-DD)	Application Number	Filing Date (YYYY-MM-DD)	Docket Number (if applicable)
6,381,516	2002-04-30	09883662	2001-06-16	1015-015

CAUTION: Maintenance fee (and surcharge, if any) payment must correctly identify: (1) the patent number and (2) the application number of the actual U.S. application leading to issuance of that patent to ensure the fee(s) is/are associated with the correct patent. 37 CFR 1.366(c) and (d).

SMALL ENTITY
☒ Patentee claims, or has previously claimed, small entity status. See 37 CFR 1.27.

LOSS OF ENTITLEMENT TO SMALL ENTITY STATUS
☐ Patentee is no longer entitled to small entity status. See 37 CFR 1.27(g)

NOT Small Entity		Small Entity	
Fee	Code	Fee	Code
○ 3 ½ year	(1551)	◉ 3 ½ year	(2551)
○ 7 ½ year	(1552)	○ 7 ½ year	(2552)
○ 11 ½ year	(1553)	○ 11 ½ year	(2553)

SURCHARGE
The surcharge required by 37 CFR 1.20(i)(2) (Fee Code 1558) must be paid as a condition of accepting unintentionally delayed payment of the maintenance fee.

MAINTENANCE FEE (37 CFR 1.20(e)-(g))
The appropriate maintenance fee must be submitted with this petition.

STATEMENT
THE UNDERSIGNED CERTIFIES THAT THE DELAY IN PAYMENT OF THE MAINTENANCE FEE TO THIS PATENT WAS UNINTENTIONAL

PETITIONER(S) REQUEST THAT THE DELAYED PAYMENT OF THE MAINTENANCE FEE BE ACCEPTED AND THE PATENT REINSTATED

THIS PORTION MUST BE COMPLETED BY THE SIGNATORY OR SIGNATORIES

37 CFR 1.378(d) states: "Any petition under this section must be signed by an attorney or agent registered to practice before the Patent and Trademark Office, or by the patentee, the assignee, or other party in interest."

I certify, in accordance with 37 CFR 1.4(d)(4) that I am

◉ An attorney or agent registered to practice before the Patent and Trademark Office

○ A sole patentee

○ A joint patentee; I certify that I am authorized to sign this submission on behalf of all the other patentees.

○ A joint patentee; all of whom are signing this e-petition

○ The assignee of record of the entire interest

Patent Practitioner			
A signature of the applicant or representative is required in accordance with 37 CFR 1.33 and 10.18. Please see 37 CFR 1.4(d) for the form of the signature			
Signature	/Mikio Ishimaru/	Date (YYYY-MM-DD)	2007-05-23
Name	Mikio Ishimaru	Registration Number	27449

This collection of information is required by 37 CFR 1.378(c). The information is required to obtain or retain a benefit by the public which is to file (and by the USPTO to process) an application. Confidentiality is governed by 35 U.S.C. 122 and 37 CFR 1.11 and 1.14. This collection is estimated to take 1 hour to complete, including gathering, preparing, and submitting the completed application form to the USPTO. Time will vary depending upon the individual case. Any comments on the amount of time you require to complete this form and/ or suggestions for reducing this burden, should be sent to the Chief Information Officer, U.S. Patent and Trademark Office, U.S. Department of Commerce, P.O. Box 1450, Alexandria, VA 22313-1450. DO NOT SEND FEES OR COMPLETED FORMS TO THIS ADDRESS. **This form can only be used when in conjunction with EFS-Web. If this form is mailed to the USPTO, it may cause delays in reinstating the patent.**

Privacy Act Statement

The Privacy Act of 1974 (P.L. 93-579) requires that you be given certain information in connection with your submission of the attached form related to a patent application or patent. Accordingly, pursuant to the requirements of the Act, please be advised that: (1) the general authority for the collection of this information is 35 U.S.C. 2(b)(2); (2) furnishing of the information solicited is voluntary; and (3) the principal purpose for which the information is used by the U.S. Patent and Trademark Office is to process and/or examine your submission related to a patent application or patent. If you do not furnish the requested information, the U.S. Patent and Trademark Office may not be able to process and/or examine your submission, which may result in termination of proceedings or abandonment of the application or expiration of the patent.

The information provided by you in this form will be subject to the following routine uses:

1. The information on this form will be treated confidentially to the extent allowed under the Freedom of Information Act (5 U.S.C. 552) and the Privacy Act (5 U.S.C. 552a). Records from this system of records may be disclosed to the Department of Justice to determine whether the Freedom of Information Act requires disclosure of these record s.

2. A record from this system of records may be disclosed, as a routine use, in the course of presenting evidence to a court, magistrate, or administrative tribunal, including disclosures to opposing counsel in the course of settlement negotiations.

3. A record in this system of records may be disclosed, as a routine use, to a Member of Congress submitting a request involving an individual, to whom the record pertains, when the individual has requested assistance from the Member with respect to the subject matter of the record.

4. A record in this system of records may be disclosed, as a routine use, to a contractor of the Agency having need for the information in order to perform a contract. Recipients of information shall be required to comply with the requirements of the Privacy Act of 1974, as amended, pursuant to 5 U.S.C. 552a(m).

5. A record related to an International Application filed under the Patent Cooperation Treaty in this system of records may be disclosed, as a routine use, to the International Bureau of the World Intellectual Property Organization, pursuant to the Patent Cooperation Treaty.

6. A record in this system of records may be disclosed, as a routine use, to another federal agency for purposes of National Security review (35 U.S.C. 181) and for review pursuant to the Atomic Energy Act (42 U.S.C. 218(c)).

7. A record from this system of records may be disclosed, as a routine use, to the Administrator, General Services, or his/her designee, during an inspection of records conducted by GSA as part of that agency's responsibility to recommend improvements in records management practices and programs, under authority of 44 U.S.C. 2904 and 2906. Such disclosure shall be made in accordance with the GSA regulations governing inspection of records for this purpose, and any other relevant (i.e., GSA or Commerce) directive. Such disclosure shall not be used to make determinations about individuals.

8. A record from this system of records may be disclosed, as a routine use, to the public after either publication of the application pursuant to 35 U.S.C. 122(b) or issuance of a patent pursuant to 35 U.S.C. 151. Further, a record may be disclosed, subject to the limitations of 37 CFR 1.14, as a routine use, to the public if the record was filed in an application which became abandoned or in which the proceedings were terminated and which application is referenced by either a published application, an application open to public inspections or an issued patent.

9. A record from this system of records may be disclosed, as a routine use, to a Federal, State, or local law enforcement agency, if the USPTO becomes aware of a violation or potential violation of law or regulation.

UNITED STATES PATENT AND TRADEMARK OFFICE

Commissioner for Patents
United States Patent and Trademark Office
P.O. Box 1450
Alexandria, VA 22313-1450
www.uspto.gov

In re Patent No. 6381516
Issue Date: April 30,2002
Application No. 09883662
Filed: June 16,2001
Attorney Docket No. 1015-015

:
:DECISION GRANTING PETITION
:UNDER 37 CFR 1.378(c)
:

This is a decision on the electronic petition, filed May 23,2007 ,under 37 CFR 1.378(c) to accept the unintentionally delayed payment of the 3.5 year maintenance fee for the above-identified patent.

The petition is GRANTED.

The maintenance fee is accepted, and the above-identified patent reinstated as of May 23,2007 . This decision also constitutes notice that the fee has been accepted. An electronic copy of the petition and this decision has been created as an entry in an Image File Wrapper. Nevertheless, petitioner should print and retain an independent copy

Telephone inquires related to this electronic decision should be directed to the Electronic Business Center at 1-866-217-9197.

UNITED STATES PATENT AND TRADEMARK OFFICE

Commissioner for Patents
United States Patent and Trademark Office
P. O. Box 1450
Alexandria, VA 22313-1450
www.uspto.gov

Paper No. 7

Patent Law Group LLP
2635 North First Street
Suite 223
San Jose, CA 95134

COPY MAILED
JUN 2 7 2003
OFFICE OF PETITIONS

In re Application of	:	
Ashok Singhal, et al.	:	
Application No. 09/883,681	:	DECISION GRANTING PETITION
Filed: June 18, 2001	:	UNDER 37 CFR 1.137(b)
Attorney Docket No. M-8496 US	:	

This is a decision on the petition filed May 20, 2003, under 37 CFR 1.137(f) which is being treated under the unintentional provisions of 37 CFR 1.137(b), to revive the instant nonprovisional application.

The petition is **GRANTED**.

Petitioner states that the instant non-provisional application is the subject of an application filed in a foreign country on June 12, 2002. However, the U. S. Patent and Trademark Office was unintentionally not notified of this filing within 45 days subsequent to the filing of the subject application in a foreign country.

In view of the above, this application became abandoned pursuant to 35 U.S.C. § 122(b)(2)(B)(iii) and 37 CFR 1.213(c) for failure to timely notify the Office of the filing of an application in a foreign country, or under a multilateral international agreement, that requires publication of applications 18 months after filing.

A petition must be accompanied by:

(1) the reply which is met by notification of such filing in a foreign country or under a multinational treaty;

(2) the petition fee as set forth in 37 CFR 1.17(m); and

(3) a statement that the entire delay in filing the required reply from the due date for the reply until the filing of a grantable petition was unintentional.

The failure to timely notify the Office of a foreign or international filing within 45 days after the date of filing of such foreign or international application as provided by 35 USC 122(b)(2)(B)(iii) and 37 CFR 1.213(c) is accepted as having been unintentionally delayed.

The previous Request and Certification under 35 USC 122(b)(2)(B)(i) has been rescinded. A Notice Regarding Rescission of Nonpublication Request which sets forth the projected publication date of October 2, 2003 accompanies this decision on petition.

Telephone inquiries concerning this decision should be directed to the undersigned at (703) 306-3475.

This application is being forwarded to Technology Center Art Unit 2183 for examination in due course.

Marianne E. Morgan

Marianne E. Morgan
Petitions Examiner
Office of Petitions
Office of the Deputy Commissioner
for Patent Examination Policy

ATTACHMENT: Notice Regarding Rescission of Nonpublication Request

UNITED STATES PATENT AND TRADEMARK OFFICE

COMMISSIONER FOR PATENTS
UNITED STATES PATENT AND TRADEMARK OFFICE
P.O. BOX 1450
ALEXANDRIA, VA 22313-1450
WWW.USPTO.GOV

Paper No. 4

COPY MAILED
MAY 1 0 2004
OFFICE OF PETITIONS

Leo J. Aubel
111 Rivershire Lane
Lincolnshire IL 60069

In re Application of
Keith S. Manson
Application No. 09/883,693
Filed: June 18, 2001
Title: COMPUTER SYSTEM WITH NATURAL LANGUAGE TO MACHINE LANGUAGE TRANSLATOR

DECISION ON PETITION UNDER 37 C.F.R. §1.137(F)

This is a decision on the petition filed February 9, 2004, pursuant to 37 C.F.R. §1.137(f)[1], to revive the above-identified application.

A grantable petition pursuant to 37 CFR 1.137(f) must be accompanied by:

(1) Notification of the filing of an application in a foreign country or under a multinational treaty that requires 18 month publication[2];
(2) The petition fee as set forth in 37 C.F.R. § 1.17(m), and;
(3) A statement that the entire delay in filing the notice from the date that the notice was due under 35 U.S.C. §122(b)(2)(B)(iii) until the date the notice was filed was unintentional. The Commissioner may require additional information where there is a question whether the delay was unintentional.

Petitioner states that the instant nonprovisional application is the subject of an application filed in either a foreign or an international application on June 12, 2002. However, the United States Patent and Trademark Office was unintentionally not notified of this filing within 45 days subsequent to the filing of the subject application in either an international application or a foreign country.

1 The decision on the original erroneously identified the original petition as being filed under 37 C.F.R. §1.137(b).
2 See PTO/SB/36 and paragraph on PTO/SB/64a for further information. Both may be downloaded at http://www.uspto.gov/web/forms/index.html.

Unfortunately, a Notice of Rescission of Nonpublication Request has not been filed with the Office. As such, Petitioner has not rescinded the previous nonpublication request.

Furthermore, Petitioner has indicated that the petition fee should be charged to his Deposit Account, however the Deposit Account does not contain sufficient funds.

Accordingly, the petition is **DISMISSED**.

Any response must be submitted within **TWO (2) MONTHS** from the mail date of this decision. Extensions of time under 37 CFR 1.136(a) are permitted. The response should include a cover letter entitled "Renewed Petition under 37 CFR 1.137(f)."

On renewed petition, Petitioner should submit a Notice of Rescission of Nonpublication Request as well as payment for the petition fee. A form which Petitioner might find useful may be found at http://www.uspto.gov/web/forms/sb0036.pdf

The reply to this letter may be submitted by mail[3], hand-delivery[4], or facsimile[5].

The reply should display "Please deliver to Paul Shanoski, c/o Office of Petitions" in a prominent manner. The Petitioner may wish to consider telephoning the undersigned at the number provided below to confirm that the documents were delivered to the undersigned. Please note that the delivery process within the PTO can take as much as three weeks.

The application file will be retained in the Office of Petitions for two (2) months.

Telephone inquiries regarding *this decision* should be directed to the undersigned at (703) 305-0011.

Paul Shanoski
Senior Attorney
Office of Petitions
United States Patent and Trademark Office

3 Mail Stop Petition, Commissioner for Patents, United States Patent and Trademark Office, P.O. Box 1450, Alexandria, VA, 22313-1450.

4 Customer Window, Mail Stop Petition, Crystal Plaza Two, Lobby, Room 1B03, Arlington, Virginia 22202.

5 (703) 872-9306 - please note this is a central facsimile number, and as such, there will be a delay in the delivery of the facsimile to the undersigned.

UNITED STATES PATENT AND TRADEMARK OFFICE

COMMISSIONER FOR PATENTS
UNITED STATES PATENT AND TRADEMARK OFFICE
P.O. BOX 1450
ALEXANDRIA, VA 22313-1450
WWW.USPTO.GOV

Paper No. 6

Leo J. Aubel
111 Rivershire Lane
Lincolnshire IL 60069

COPY MAILED
JUN 07 2004
OFFICE OF PETITIONS

In re Application of
Keith S. Manson
Application No. 09/883,693
Filed: June 18, 2001
Title: COMPUTER SYSTEM WITH NATURAL LANGUAGE TO MACHINE LANGUAGE TRANSLATOR

DECISION ON RENEWED PETITION UNDER 37 C.F.R. §1.137(F)

This is a decision on the petition filed May 18, 2004, pursuant to 37 C.F.R. §1.137(f)[1], to revive the above-identified application.

A grantable petition pursuant to 37 CFR 1.137(f) must be accompanied by:

(1) Notification of the filing of an application in a foreign country or under a multinational treaty that requires 18 month publication[2];
(2) The petition fee as set forth in 37 C.F.R. § 1.17(m), and;
(3) A statement that the entire delay in filing the notice from the date that the notice was due under 35 U.S.C. §122(b)(2)(B)(iii) until the date the notice was filed was unintentional. The Commissioner may require additional information where there is a question whether the delay was unintentional.

The original petition was submitted on February 9, 2004, and dismissed via the mailing of a decision on May 10, 2004 for failure to submit both the petition fee and a Notice of Rescission of Nonpublication Request.

1 The decision on the original erroneously identified the original petition as being filed under 37 C.F.R. §1.137(b).
2 See PTO/SB/36 and paragraph on PTO/SB/64a for further information. Both may be downloaded at http://www.uspto.gov/web/forms/index.html.

In his original petition, Petitioner set forth that the instant nonprovisional application is the subject of an application filed in either a foreign or an international application on June 12, 2002. However, the United States Patent and Trademark Office was unintentionally not notified of this filing within 45 days subsequent to the filing of the subject application in either an international application or a foreign country.

In view of the above, this application became abandoned pursuant to 35 U.S.C. §1.22(b)(2)(B)(iii) and 37 C.F.R. §1.213(c) for failure to timely notify the Office of the filing of either a foreign application or an application under a multilateral international agreement that requires publication of applications 18 months after filing.

The petition under 37 C.F.R. §1.137(f) is **GRANTED**.

Petitioner has submitted the notification of either a foreign or an international filing, paid the petition fee, and has made the proper statement of unintentional delay.

The instant petition has been found to be in compliance with 37 C.F.R. §1.137(f). Accordingly, the failure to timely notify the Office of a foreign or international filing within 45 days after the date of filing of such foreign or international application as provided by 35 U.S.C. §122(b)(2)(B)(iii) and 37 C.F.R. §1.213(c) is accepted as having been unintentionally delayed.

The previous Request and Certification under 35 U.S.C. §122(b)(2)(B)(i), filed with the original application papers, has been rescinded. A Notice Regarding Rescission of Nonpublication Request which sets forth the projected publication date of September 16, 2004 accompanies this decision on petition.

After this decision is mailed, the application will be forwarded to Technology Center 2600.

Telephone inquiries concerning *this decision* should be directed to the undersigned at (703) 305-0011.

Paul Shanoski
Senior Attorney
Office of Petitions
United States Patent and Trademark Office

Under the Paperwork Reduction Act of 1995, no persons are required to respond to a collection of information unless it displays valid OMB control number.

PETITION TO ACCEPT UNINTENTIONALLY DELAYED PAYMENT OF MAINTENANCE FEE IN AN EXPIRED PATENT (37 CFR 1.378(c))

Patent Number	Issue Date (YYYY-MM-DD)	Application Number	Filing Date (YYYY-MM-DD)	Docket Number (if applicable)
6,539,773	2003-04-01	09/883,712	2001-06-18	69012-47

CAUTION: Maintenance fee (and surcharge, if any) payment must correctly identify: (1) the patent number and (2) the application number of the actual U.S. application leading to issuance of that patent to ensure the fee(s) is/are associated with the correct patent. 37 CFR 1.366(c) and (d).

SMALL ENTITY
☒ Patentee claims, or has previously claimed, small entity status. See 37 CFR 1.27.

LOSS OF ENTITLEMENT TO SMALL ENTITY STATUS
☐ Patentee is no longer entitled to small entity status. See 37 CFR 1.27(g)

NOT Small Entity			Small Entity		
	Fee	Code		Fee	Code
○	3 ½ year	(1551)	◉	3 ½ year	(2551)
○	7 ½ year	(1552)	○	7 ½ year	(2552)
○	11 ½ year	(1553)	○	11 ½ year	(2553)

SURCHARGE
The surcharge required by 37 CFR 1.20(i)(2) (Fee Code 1558) must be paid as a condition of accepting unintentionally delayed payment of the maintenance fee.

MAINTENANCE FEE (37 CFR 1.20(e)-(g))
The appropriate maintenance fee must be submitted with this petition.

STATEMENT
THE UNDERSIGNED CERTIFIES THAT THE DELAY IN PAYMENT OF THE MAINTENANCE FEE TO THIS PATENT WAS UNINTENTIONAL

PETITIONER(S) REQUEST THAT THE DELAYED PAYMENT OF THE MAINTENANCE FEE BE ACCEPTED AND THE PATENT REINSTATED

THIS PORTION MUST BE COMPLETED BY THE SIGNATORY OR SIGNATORIES

37 CFR 1.378(d) states: "Any petition under this section must be signed by an attorney or agent registered to practice before the Patent and Trademark Office, or by the patentee, the assignee, or other party in interest."

I certify, in accordance with 37 CFR 1.4(d)(4) that I am

◉ An attorney or agent registered to practice before the Patent and Trademark Office

○ A sole patentee

○ A joint patentee; I certify that I am authorized to sign this submission on behalf of all the other patentees.

○ A joint patentee; all of whom are signing this e-petition

○ The assignee of record of the entire interest

Patent Practitioner			
A signature of the applicant or representative is required in accordance with 37 CFR 1.33 and 10.18. Please see 37 CFR 1.4(d) for the form of the signature			
Signature	/W. Scott Harders/	Date (YYYY-MM-DD)	2007-05-17
Name	W. Scott Harders	Registration Number	42629

This collection of information is required by 37 CFR 1.378(c). The information is required to obtain or retain a benefit by the public which is to file (and by the USPTO to process) an application. Confidentiality is governed by 35 U.S.C. 122 and 37 CFR 1.11 and 1.14. This collection is estimated to take 1 hour to complete, including gathering, preparing, and submitting the completed application form to the USPTO. Time will vary depending upon the individual case. Any comments on the amount of time you require to complete this form and/ or suggestions for reducing this burden, should be sent to the Chief Information Officer, U.S. Patent and Trademark Office, U.S. Department of Commerce, P.O. Box 1450, Alexandria, VA 22313-1450. DO NOT SEND FEES OR COMPLETED FORMS TO THIS ADDRESS. **This form can only be used when in conjunction with EFS-Web. If this form is mailed to the USPTO, it may cause delays in reinstating the patent.**

Privacy Act Statement

The Privacy Act of 1974 (P.L. 93-579) requires that you be given certain information in connection with your submission of the attached form related to a patent application or patent. Accordingly, pursuant to the requirements of the Act, please be advised that: (1) the general authority for the collection of this information is 35 U.S.C. 2(b)(2); (2) furnishing of the information solicited is voluntary; and (3) the principal purpose for which the information is used by the U.S. Patent and Trademark Office is to process and/or examine your submission related to a patent application or patent. If you do not furnish the requested information, the U.S. Patent and Trademark Office may not be able to process and/or examine your submission, which may result in termination of proceedings or abandonment of the application or expiration of the patent.

The information provided by you in this form will be subject to the following routine uses:

1. The information on this form will be treated confidentially to the extent allowed under the Freedom of Information Act (5 U.S.C. 552) and the Privacy Act (5 U.S.C. 552a). Records from this system of records may be disclosed to the Department of Justice to determine whether the Freedom of Information Act requires disclosure of these record s.

2. A record from this system of records may be disclosed, as a routine use, in the course of presenting evidence to a court, magistrate, or administrative tribunal, including disclosures to opposing counsel in the course of settlement negotiations.

3. A record in this system of records may be disclosed, as a routine use, to a Member of Congress submitting a request involving an individual, to whom the record pertains, when the individual has requested assistance from the Member with respect to the subject matter of the record.

4. A record in this system of records may be disclosed, as a routine use, to a contractor of the Agency having need for the information in order to perform a contract. Recipients of information shall be required to comply with the requirements of the Privacy Act of 1974, as amended, pursuant to 5 U.S.C. 552a(m).

5. A record related to an International Application filed under the Patent Cooperation Treaty in this system of records may be disclosed, as a routine use, to the International Bureau of the World Intellectual Property Organization, pursuant to the Patent Cooperation Treaty.

6. A record in this system of records may be disclosed, as a routine use, to another federal agency for purposes of National Security review (35 U.S.C. 181) and for review pursuant to the Atomic Energy Act (42 U.S.C. 218(c)).

7. A record from this system of records may be disclosed, as a routine use, to the Administrator, General Services, or his/her designee, during an inspection of records conducted by GSA as part of that agency's responsibility to recommend improvements in records management practices and programs, under authority of 44 U.S.C. 2904 and 2906. Such disclosure shall be made in accordance with the GSA regulations governing inspection of records for this purpose, and any other relevant (i.e., GSA or Commerce) directive. Such disclosure shall not be used to make determinations about individuals.

8. A record from this system of records may be disclosed, as a routine use, to the public after either publication of the application pursuant to 35 U.S.C. 122(b) or issuance of a patent pursuant to 35 U.S.C. 151. Further, a record may be disclosed, subject to the limitations of 37 CFR 1.14, as a routine use, to the public if the record was filed in an application which became abandoned or in which the proceedings were terminated and which application is referenced by either a published application, an application open to public inspections or an issued patent.

9. A record from this system of records may be disclosed, as a routine use, to a Federal, State, or local law enforcement agency, if the USPTO becomes aware of a violation or potential violation of law or regulation.

UNITED STATES PATENT AND TRADEMARK OFFICE

Commissioner for Patents
United States Patent and Trademark Office
P.O. Box 1450
Alexandria, VA 22313-1450
www.uspto.gov

In re Patent No. 6539773
Issue Date: April 1,2003
Application No. 09883712
Filed: June 18,2001
Attorney Docket No. LSP-39

:
:DECISION GRANTING PETITION
:UNDER 37 CFR 1.378(c)
:

This is a decision on the electronic petition, filed May 18,2007 ,under 37 CFR 1.378(c) to accept the unintentionally delayed payment of the 3.5 year maintenance fee for the above-identified patent.

The petition is GRANTED.

The maintenance fee is accepted, and the above-identified patent reinstated as of May 18,2007 . This decision also constitutes notice that the fee has been accepted. An electronic copy of the petition and this decision has been created as an entry in an Image File Wrapper. Nevertheless, petitioner should print and retain an independent copy

Telephone inquires related to this electronic decision should be directed to the Electronic Business Center at 1-866-217-9197.

UNITED STATES PATENT AND TRADEMARK OFFICE

COMMISSIONER FOR PATENT
UNITED STATES PATENT AND TRADEMARK OFFIC
WASHINGTON, D.C. 20231
www.uspto.go

Paper No. 20

THOMAS F. MEAGHER
KENYON & KENYON
ONE BROADWAY
NEW YORK, NY 10004

COPY MAILED

APR 2 8 2003

OFFICE OF PETITIONS

In re Application of :
Mark Thompson et al :
Application No. 09/883,734 :
Filed: June 18, 2001 :
Attorney Docket No. 10020/15302 :

NOTICE

This is a notice regarding your request for acceptance of a fee deficiency submission under 37 CFR 1.28. On September 1, 1998, the Court of Appeals for the Federal Circuit held that 37 CFR 1.28(c) is the sole provision governing the time for correction of the erroneous payment of the issue fee as a small entity. **See DH Technology v. Synergystex International, Inc. 154 F.3d 1333, 47 USPQ2d 1865 (Fed. Cir. Sept. 1, 1998).**

The Office no longer investigates or rejects original or reissue applications under 37 CFR 1.56. **1098 Off. Gaz. Pat. Office 502 (January 3, 1989)**. Therefore, nothing in this Notice is intended to imply that an investigation was done.

Your fee deficiency submission under 37 CFR 1.28 is hereby **ACCEPTED**.

Inquiries related to this communication should be directed to the Office of Petitions Staff at (703) 305-9285.

This file is being forwarded to Technology Center 1700.

Irvin Dingle
Petitions Examiner
Office of Petitions
Office of the Deputy Commissioner
for Patent Examination Policy

UNITED STATES PATENT and TRADEMARK OFFICE
UNDER SECRETARY OF COMMERCE FOR INTELLECTUAL PROPERTY AND
DIRECTOR OF THE UNITED STATES PATENT AND TRADEMARK OFFICE
WASHINGTON, D.C. 20231
WWW.USPTO.GOV

#23

JUL 1 2003

In re Application of	:	DECISION
THOMPSON et al.	:	
Serial Number: 09/883,734	:	ON
Filed: June 18, 2001	:	
For: ORGANOMETALLIC COMPLEXES AS FLUORESCENT EMITTERS IN ORGANIC LEDS	:	PETITION

This is a decision on a petition to change the inventorship filed under 1.148(b) on April 18, 2003. It is noted that applicant has met the requirements of (1)a request, signed by a party set forth in §1.33(b), to correct the inventorship that identifies the named inventor or inventor's being deleted and acknowledges that the inventor's invention is no longer being claimed in the nonprovisional application; and (2) the processing fee set forth in § 1.17(i).

The petition is **GRANTED**.

Cynthia H. Kelly
Supervisory Patent Examiner
Technology Center 1700

KENYON & KENYON
One Broadway
New York, New York 10004

UNITED STATES PATENT AND TRADEMARK OFFICE

Commissioner for Patents
United States Patent and Trademark Office
P.O. Box 1450
Alexandria, VA 22313-1450
www.uspto.gov

CSA LLP
4807 SPICEWOOD SPRINGS RD.
BLDG. 4, SUITE 201
AUSTIN TX 78759

COPY MAILED

JAN 19 2007

OFFICE OF PETITIONS

In re Application of	:	
Subramaniam et al.	:	
Application No. 09/883,739	:	DECISION GRANTING PETITION
Filed: June 18, 2001	:	UNDER 37 CFR 1.137(b)
Attorney Docket No. OIC0199US	:	

This is a decision on the petition, filed October 4, 2006, which is being treated as a petition under 37 CFR 1.137(b) to revive the instant non-provisional application for failure to timely notify the U.S. Patent and Trademark (USPTO) of the filing of an application in a foreign country, or under a multinational treaty that requires publication of applications eighteen months after filing. *See* 37 CFR 1.137(f).

The petition is **GRANTED**.

Petitioner states that the instant nonprovisional application is the subject of an application filed in an eighteen-month publication country on June 17, 2002. However, the USPTO was unintentionally not notified of this filing within 45 days subsequent to the filing of the subject application in an eighteen-month publication country.

In view of the above, this application became abandoned pursuant to 35 U.S.C. § 122(b)(2)(B)(iii) and 37 CFR 1.213(c) for failure to timely notify the Office of the filing of an application in a foreign country or under a multilateral international agreement that requires publication of applications 18 months after filing.

A petition to revive an application abandoned pursuant to 35 U.S.C. 122(b)(2)(B)(iii) for failure to notify the USPTO of a foreign filing must be accompanied by:

(1) the required reply which is met by the notification of such filing in a foreign country or under a multinational treaty;
(2) the petition fee as set forth in 37 CFR 1.17(m); and
(3) a statement that the entire delay in filing the required reply from the due date of the reply until the filing of a grantable petition was unintentional.

The instant petition has been found to be in compliance with 37 CFR 1.137(b). Accordingly, the failure to timely notify the USPTO of a foreign or international filing within 45 days after the date of filing of such foreign or international application as provided by 35 U.S.C. § 122(b)(2)(B)(iii) and 37 CFR 1.213(c) is accepted as having been unintentionally delayed.

The previous Request and Certification under 35 U.S.C. § 122(b)(2)(B)(i) has been rescinded. A Notice Regarding Rescission of Nonpublication Request which sets forth the projected publication date of January 18, 2007, was previously mailed on October 10, 2006.

This application is being forwarded to Technology Center Art Unit 2121 for examination in due course.

Telephone inquiries concerning this decision should be directed to the undersigned at (571) 272-3206.

Liana Walsh
Petitions Examiner
Office of Petitions

UNITED STATES PATENT AND TRADEMARK OFFICE

COMMISSIONER FOR PATENTS
UNITED STATES PATENT AND TRADEMARK OFFICE
WASHINGTON, D.C. 20231
www.uspto.gov

Paper No. 3

KING & SPALDING
191 Peachtree Street, N.E.
Atlanta, GA 30303-1763

MAIL

OCT 0 3 2002

DIRECTOR OFFICE
TECHNOLOGY CENTER 2100

In re Application of:	)	
Christopher D. HANCOCK	)	
Application No. 09/883,751	)	**DECISION ON REQUEST FOR**
Filed: June 18, 2001	)	**WITHDRAWAL AS ATTORNEY**
For: SYSTEM AND METHOD FOR	)	
MANAGING WEB PAGE MEDIA	)	

This is a decision on the Request To Withdraw from Representation filed September 4, 2002.

A grantable request to withdraw as attorney of record should indicate thereon the present mailing addresses of the attorney(s) who is/are withdrawing from the record and of the applicant. The request for withdrawal must be signed by every attorney seeking to withdraw or contain a clear indication that one attorney is signing on behalf of another/others. A request to withdraw will not be approved unless at least 30 (thirty) days would remain between the date of approval and the later of the expiration date of a time to file a response or the expiration date of the maximum time period which can be extended under 37 C.F.R. § 1. 136(a). The effective date of withdrawal being the date of decision and not the date of request. See M.P.E.P. § 402.06. 37 C.F.R. § 1.36 further requires that the applicant or patent owner be notified of the withdrawal of the attorney or agent.

The request is **GRANTED**.

All future communications from the Office will continue to be directed to the above-listed address until otherwise notified by applicant. This correspondence address is provided by the withdrawn attorney(s). Applicant is reminded of the obligation to promptly notify the Patent and Trademark Office (Office) of any change in correspondence address to ensure receipt of all communications from the Office.

Vincent N. Trans
Special Programs Examiner
Technology Center 2100
Computer Architecture and Software
(703) 305-9750

UNITED STATES PATENT AND TRADEMARK OFFICE

Commissioner for Patents
United States Patent and Trademark Office
P.O. Box 1450
Alexandria, VA 22313-1450
www.uspto.gov

EDWARDS & ANGELL, LLP
P.O. BOX 55874
BOSTON, MA 02205

COPY MAILED

FEB 16 2005

OFFICE OF PETITIONS

In re Application of :
Edward J. Mack et al :
Application No. 09/833,755 :
Filed: April 11, 2001 :
Attorney Docket No. 55531 (45676) :

DECISION ON PETITION
UNDER 37 CFR 1.137(b)

CORRECTED DECISION

This is a corrected decision on the petition, filed December 29, 2004, which is being treated as a petition under 37 CFR 1.137(b) to revive the instant nonprovisional application for failure to timely notify the U.S. Patent and Trademark (USPTO) of the filing of an application in a foreign country, or under a multinational treaty that requires publication of applications eighteen months after filing[1]. See 37 CFR 1.137(f).

The petition is **GRANTED**.

Petitioner states that the instant nonprovisional application is the subject of an application filed in an eighteen months publication country on July 27, 2001. However, the USPTO was unintentionally not notified of this filing within 45 days subsequent to the filing of the subject application in an eighteen months publication country.

In view of the above, this application became abandoned pursuant to 35 U.S.C. § 122(b)(2)(B)(iii) and 37 CFR 1.213(c) for failure to timely notify the Office of the filing of an application in a foreign country, or under a multilateral international agreement, that requires publication of applications 18 months after filing.

A petition to revive an application abandoned pursuant to 35 U.S.C. 122(b)(2)(B)(iii) for failure to notify the USPTO of a foreign filing must be accompanied by:

[1] In view of a telephone call that was made to Mr. Irvin Dingle from Mr. Mark Russett on February 15, 2005 stating the correct filing date of the subsequently-filed foreign or international application is July 27, 2001 and not February 7, 2002.

(1) the required reply which is met by the notification of such filing in a foreign country or under a multinational treaty;

(2) the petition fee as set forth in 37 CFR 1.17(m); and

(3) a statement that the entire delay in filing the required reply from the due date of the reply until the filing of a grantable petition was unintentional.

The instant petition has been found to be in compliance with 37 CFR 1.137(b). Accordingly, the failure to timely notify the USPTO of a foreign or international filing within 45 days after the date of filing of such foreign or international application as provided by 35 U.S.C. § 122(b)(2)(B)(iii) and 37 CFR 1.213(c) is accepted as having been unintentionally delayed.

The previous Request and Certification under 35 U.S.C. § 122 (b) (2) (B) (i) has been rescinded. A Notice Regarding Rescission of Nonpublication Request which sets forth the projected publication date of May 5, 2005 has been mailed with the decision on February 1, 2005.

Any inquiries concerning this decision may be directed to Irvin Dingle at (571) 272-3210.

Irvin Dingle
Petitions Examiner
Office of Petitions
Office of the Deputy Commissioner
for Patent Examination Policy

UNITED STATES PATENT AND TRADEMARK OFFICE

Commissioner for Patents
United States Patent and Trademark Office
P.O. Box 1450
Alexandria, VA 22313-1450
www.uspto.gov

CSA LLP
4807 SPICEWOOD SPRINGS RD.
BLDG. 4, SUITE 201
AUSTIN, TX 78759

COPY MAILED

FEB 1 2 2007

OFFICE OF PETITIONS

In re Application of
Pavitra Subramaniam et al
Application No. 09/883,755
Filed: June 18, 2001
Attorney Docket No. OIC0198US

DECISION ON PETITION
UNDER 37 CFR 1.137(b)

This is a decision on the petition, filed October 4, 2006, which is being treated as a petition under 37 CFR 1.137(b) to revive the instant nonprovisional application for failure to timely notify the U.S. Patent and Trademark (USPTO) of the filing of an application in a foreign country, or under a multinational treaty that requires publication of applications eighteen months after filing. See 37 CFR 1.137(f).

The petition is **GRANTED**.

Petitioner states that the instant nonprovisional application is the subject of an application filed in an eighteen months publication country on June 17, 2002. However, the USPTO was unintentionally not notified of this filing within 45 days subsequent to the filing of the subject application in an eighteen months publication country.

In view of the above, this application became abandoned pursuant to 35 U.S.C. § 122(b)(2)(B)(iii) and 37 CFR 1.213(c) for failure to timely notify the Office of the filing of an application in a foreign country, or under a multilateral international agreement, that requires publication of applications 18 months after filing.

A petition to revive an application abandoned pursuant to 35 U.S.C. 122(b)(2)(B)(iii) for failure to notify the USPTO of a foreign filing must be accompanied by:

(1) the required reply which is met by the notification of such filing in a foreign country or under a multinational treaty;

(2) the petition fee as set forth in 37 CFR 1.17(m); and

(3) a statement that the entire delay in filing the required reply from the due date of the reply until the filing of a grantable petition was unintentional.

The instant petition has been found to be in compliance with 37 CFR 1.137(b). Accordingly, the failure to timely notify the USPTO of a foreign or international filing within 45 days after the date of filing of

such foreign or international application as provided by 35 U.S.C. § 122(b)(2)(B)(iii) and 37 CFR 1.213(c) is accepted as having been unintentionally delayed.

The previous Request and Certification under 35 U.S.C. § 122 (b) (2) (B) (i) has been rescinded. A Notice Regarding Rescission of Nonpublication Request which sets forth the projected publication date will be mailed in a separate correspondence.

Any inquiries concerning this decision may be directed to Irvin Dingle at (571) 272-3210.

This matter is being referred to Technology Center AU 2164 for examination in due course.

Irvin Dingle
Petitions Examiner
Office of Petitions

UNITED STATES PATENT AND TRADEMARK OFFICE

Commissioner for Patents
United States Patent and Trademark Office
P.O. Box 1450
Alexandria, VA 22313-1450
www.uspto.gov

BLAKELY SOKOLOFF TAYLOR & ZAFMAN, LLP
12400 WILSHIRE BOULEVARD, 7TH FLOOR
LOS ANGELES, CA 90025-1026

COPY MAILED

MAY 1 2 2008

OFFICE OF PETITIONS

In re Application of	:	
SUBRAMANIAM, et al.	:	
Application No. 09/883,755	:	DECISION ON PETITION
Filed: June 18, 2001	:	TO WITHDRAW
Attorney Docket No. **OIC0198US**	:	FROM RECORD
	:	

This is a decision on the Request to Withdraw as attorney or agent of record under 37 C.F.R. § 1.36(b), filed July 3, 2006.

The request is **DISMISSED** as moot.

A review of the file record indicates that the power of attorney to **BLAKELY SOKOLOFF TAYLOR & ZAFMAN, LLP** has been revoked by the assignee of the patent application on September 5, 2006. Accordingly, the request to withdraw under 37 C.F.R. § 1.36(b) is moot.

All future communications from the Office will continue to be directed to the below-listed address until otherwise notified by applicant.

Telephone inquires concerning this decision should be directed to the undersigned at 571-272-7253.

Monica A. Graves
Petitions Examiner
Office of Petitions

cc: **CSA LLP**
4807 SPICEWOOD SPRING ROAD
BUILDING 4, SUITE 201
AUSTIN, TX 78759

UNITED STATES PATENT AND TRADEMARK OFFICE

Commissioner for Patents
United States Patent and Trademark Office
P.O. Box 1450
Alexandria, VA 22313-1450
www.uspto.gov

SIEMENS CORPORATION
INTELLECTUAL PROPERTY LAW
DEPARTMENT
170 WOOD AVENUE SOUTH
ISELIN NJ 08830

COPY MAILED

FEB 0 9 2005

OFFICE OF PETITIONS

In re Application of :
Brian Morrison :
Application No. 09/883,756 :
Filed: June 18, 2001 :
Attorney Docket No. 60,426-194;2000P078400US0 :

ON PETITION

This is a decision on the petition, filed February 3, 2005, under 37 CFR 1.313(c)(3) to withdraw the above-identified application from issue after payment of the issue fee.

The petition is **GRANTED**.

The above-identified application is withdrawn from issue for express abandonment. See 37 CFR 1.313(c)(3). The above-identified application is expressly abandoned in favor of a continuing application.

The file does not indicate a change of address has been submitted, although the address given on the petition differs from the address of record. If appropriate, a change of address should be filed in accordance with MPEP 601.03. A courtesy copy of this decision is being mailed to the address given on the petition; however, the Office will mail all future correspondence solely to the address of record.

Telephone inquiries should be directed to the undersigned at (571) 272-3208.

This matter will be referred to Files Repository.

Karen Creasy

Karen Creasy
Petitions Examiner
Office of Petitions
Office of the Deputy Commissioner
for Patent Examination Policy

cc:
CARLSON, GASKEY & OLDS
DAVID J. GASKEY
400 W. MAPLE RD., STE. 350
BIRMINGHAM, MI 48009

UNITED STATES PATENT AND TRADEMARK OFFICE

Commissioner for Patents
United States Patent and Trademark Office
P.O. Box 1450
Alexandria, VA 22313-1450
www.uspto.gov

CSA LLP
4807 SPICEWOOD SPRINGS ROAD
BLDG. 4, SUITE 201
AUSTIN, TX 78759

COPY MAILED

FEB 23 2007

OFFICE OF PETITIONS

In re Application of	:	
Pavitra Subramaniam et al	:	
Application No. 09/883,776	:	DECISION ON PETITION
Filed: June 18, 2001	:	UNDER 37 CFR 1.137(b)
Attorney Docket No. OCICO111US	:	

This is a decision on the petition, filed December 7, 2006, under 37 CFR 1.137(b) to revive the instant nonprovisional application for failure to timely notify the U.S. Patent and Trademark (USPTO) of the filing of an application in a foreign country, or under a multinational treaty that requires publication of applications eighteen months after filing. *See* 37 CFR 1.137(f).

The petition is **GRANTED**.

Petitioner states that a copending application containing the same or similar disclosure had a counterpart application filed in a foreign country or under a multinational international treaty that requires publication of applications eighteen months after filing. The copending application's foreign-filed counterpart is Application No. PCT/US02/19401, filed June 17, 2002. However, the USPTO was unintentionally not notified of this filing within 45 days subsequent to the filing of the subject application in the eighteen-month publication country.

In view of the above, this application became abandoned pursuant to 35 U.S.C. § 122(b)(2)(B)(iii) and 37 CFR 1.213(c) for failure to timely notify the Office of the filing of an application in a foreign country or under a multilateral international agreement that requires publication of applications 18 months after filing.

A petition to revive an application abandoned pursuant to 35 U.S.C. 122(b)(2)(B)(iii) for failure to notify the USPTO of a foreign filing must be accompanied by:

(1) the required reply which is met by the notification of such filing in a foreign country or under a multinational treaty;
(2) the petition fee as set forth in 37 CFR 1.17(m); and
(3) a statement that the entire delay in filing the required reply from the due date of the reply until the filing of a grantable petition was unintentional.

The instant petition has been found to be in compliance with 37 CFR 1.137(b). Accordingly, the failure to timely notify the USPTO of a foreign or international filing within 45 days after the date of filing of such foreign or international application as provided by 35 U.S.C. § 122(b)(2)(B)(iii) and 37 CFR 1.213(c) is accepted as having been unintentionally delayed.

The previous Request and Certification under 35 U.S.C. § 122(b)(2)(B)(i) has been rescinded. A Notice Regarding Rescission of Nonpublication Request, which sets forth the projected publication date of May 31, 2007 was mailed on February 20, 2007.

A Notice of Allowability and a Notice of Allowance and Fee(s) Due were mailed in this case on May 12, 2006. However, in view of the nonpublication request filed with the application, the Notice of Allowance and Fee(s) Due mailed in this case did not require the submission of a publication fee. Therefore, as authorized in the petition, the $300 publication fee now due will be charged to petitioner's deposit account. If publication of the application does not occur, applicant may file a request for a refund after the patent issues. *See* 37 CFR 1.211(e).

Telephone inquiries concerning this decision should be directed to the undersigned at (571) 272-3218.

Frances Hicks

Frances Hicks
Petitions Examiner
Office of Petitions

SPE RESPONSE FOR CERTIFICATE OF CORRECTION

Paper No.: X

DATE : **September 12, 2007**

TO SPE OF : ART UNIT **2167**

SUBJECT : Request for Certificate of Correction for Appl. No.: **09/883776** Patent No.: **7213013 B1**

A response is requested with respect to a request for a certificate of correction.

With respect to the change(s) requested to correct Office and/or Applicant's errors, should the patent read as shown in the certificate of correction attached herewith or the COCIN document(s), in IFW images for the above-identified patented application? No new matter should be introduced, nor should the scope or meaning of the claims be changed.

If the response is for an IFW, within 7 days, please complete and forward the response, to the employee (named below) via scanning into application images, using document code **COCX**.

DO NOT SENT TO ATTORNEY

If the response is for a paper file wrapper, please complete the response and forward the response with the paper file wrapper, to the employee (named below), within **7** days, to:

Certificates of Correction Branch (CofC)
South Tower - 9A22
Palm Location 7580

VIRGINIA TOLBERT
Certificates of Correction Branch
703-308-9390 ext. 113

Thank You For Your Assistance

The request for issuing the above-identified correction(s) is hereby:
Note your decision on the appropriate box.

- ☑ **Approved** — **All** changes apply.
- ☐ **Approved in Part** — Specify below which changes **do not** apply.
- ☐ **Denied** — State the reasons for denial below.

Comments: _____

_____

_____

_____

_____

SPE — **2167 Art Unit**

SPE RESPONSE FOR CERTIFICATE OF CORRECTION

Paper No.: _____

DATE : August 31, 2009

TO SPE OF : ART UNIT 3696

SUBJECT : Request for certificate of correction for Appln.no. 09/883779

Please respond to this request for a certificate of correction within 7 days.

FOR IFW FILES:

Please review the requested changes/corrections as shown in the **COCIN** document(s) in the IFW application image. No new matter should be introduced, nor should the scope or meaning of the claims be changed.

Please complete the response (see below) and forward the completed response to scanning using document code **COCX**.

FOR PAPER FILES:

Please review the requested changes/corrections as shown in the attached certificate of correction. Please complete this form (see below) and forward it with the file to:

Certificates of Correction Branch (CofC)
South Tower - 9A22
Palm Location 7580

Magdalene Talley
Certificates of Correction Branch
703-308-9390 ext. 120

Thank You For Your Assistance

The request for issuing the above-identified correction(s) is hereby:
Note your decision on the appropriate box.

/Frantzy/Poinvil/

11/30/2009

- ☒ **Approved** — **All** changes apply.
- ☐ **Approved in Part** — Specify below which changes **do not** apply.
- ☐ **Denied** — State the reasons for denial below.

Comments: _____

UNITED STATES PATENT AND TRADEMARK OFFICE

Commissioner for Patents
United States Patent and Trademark Office
P.O. Box 1450
Alexandria, VA 22313-1450
www.uspto.gov

SCHWEGMAN, LUNDBERG, WOESSNER & KLUTCH
P.O. BOX 2938
MINNEAPOLIS MN 55402

COPY MAILED

OCT 29 2004

OFFICE OF PETITIONS

ON PETITION

In re Application of :
Leonard Forbes et al :
Application No. 09/883,795 :
Filed: June 18, 2001 :
Attorney Docket No. 303.355US4 :

This is a decision on the petition, filed October 25, 2004, under 37 CFR 1.313(c)(2) to withdraw the above-identified application from issue after payment of the issue fee.

The petition is **GRANTED**.

The above-identified application is withdrawn from issue for consideration of a submission under 37 CFR 1.114 (request for continued examination). See 37 CFR 1.313(c)(2).

Petitioner is advised that the issue fee paid on June 21, 2004 in the above-identified application cannot be refunded. If, however, the above-identified application is again allowed, petitioner may request that it be applied towards the issue fee required by the new Notice of Allowance.[1]

Telephone inquiries should be directed to the undersigned at (571) 272-3208.

The examiner of Technology Center AU 2814 will consider the request for continued examination under 37 CFR 1.114.

Karen Creasy

Karen Creasy
Petitions Examiner
Office of Petitions
Office of the Deputy Commissioner
for Patent Examination Policy

---

[1] The request to apply the issue fee to the new Notice may be satisfied by completing and returning the new Issue Fee Transmittal Form PTOL-85(b), which includes the following language thereon: "Commissioner for Patents is requested to apply the Issue Fee and Publication Fee (if any) or re-apply any previously paid issue fee to the application identified above." Petitioner is advised that, whether a fee is indicated as being due or not, the Issue Fee Transmittal Form **must** be completed and timely submitted to avoid abandonment. Note the language in bold text on the first page of the Notice of Allowance and Fee(s) Due (PTOL-85).

UNITED STATES PATENT AND TRADEMARK OFFICE

Commissioner for Patents
United States Patent and Trademark Office
P.O. Box 1450
Alexandria, VA 22313-1450
www.uspto.gov

CHARLES N. QUINN
FOX ROTHSCHILD
2000 MARKET STREET
10TH FLOOR
PHILADELPHIA, PA 19103

COPY MAILED

OCT 2 7 2005

OFFICE OF PETITIONS

In re Application of	:	
Stephen B. Maguire	:	
Application No. 09/883,837	:	ON PETITION
Filed: June 18, 2001	:	
Attorney Docket No. 40526.04501	:	

This is a decision on the petition under 37 CFR 1.313(c), filed October 25, 2005, which is being treated under 37 CFR 1.313(c)(2), to withdraw the above-identified application from issue after payment of the issue fee.

The petition is **GRANTED**.

The above-identified application is withdrawn from issue for consideration of a submission under 37 CFR 1.114 (request for continued examination). See 37 CFR 1.313(c)(2).

Petitioner is advised that the issue fee paid on August 18, 2005 in the above-identified application cannot be refunded. If, however, the above-identified application is again allowed, petitioner may request that it be applied towards the issue fee required by the new Notice of Allowance.[1]

Telephone inquiries should be directed to Wan Laymon at (571) 272-3220.

This matter is being referred to Technology Center AU 3749 for processing of the request for continued examination under 37 CFR 1.114 and for consideration of the concurrently filed IDS.

Wan Laymon
Wan Laymon
Petitions Examiner
Office of Petitions

---

[1] The request to apply the issue fee to the new Notice may be satisfied by completing and returning the new Issue Fee Transmittal Form PTOL-85(b), which includes the following language thereon: "Commissioner for Patents is requested to apply the Issue Fee and Publication Fee (if any) or re-apply any previously paid issue fee to the application identified above." Petitioner is advised that, whether a fee is indicated as being due or not, the Issue Fee Transmittal Form **must** be completed and timely submitted to avoid abandonment. Note the language in bold text on the first page of the Notice of Allowance and Fee(s) Due (PTOL-85).

UNITED STATES PATENT AND TRADEMARK OFFICE

Commissioner for Patents
United States Patent and Trademark Office
P.O. Box 1450
Alexandria, VA 22313-1450
www.uspto.gov

OIPE IAP95
APR 12 2007
PATENT & TRADEMARK OFFICE

RECEIVED
IP GROUP
APR 10 2006
FOX ROTHSCHILD LLP

CHARLES N. QUINN
FOX ROTHSCHILD LLP
2000 MARKET STREET, 10TH FLOOR
PHILADELPHIA PA 19103

COPY MAILED
APR 04 2006
OFFICE OF PETITIONS

In re Application of	:	
Maguire, Stephen B.	:	
Application No. 09/883,837	:	ON PETITION
Filed: June 18, 2001	:	
Attorney Docket No. 40526.04501	:	

This is a decision on the petition under 37 C.F.R. § 1.137(b), filed March 13, 2006, to revive the above-identified application.

The petition is **GRANTED.**

The petition satisfies the conditions for revival pursuant to the provisions of 37 CFR 1.137(b) in that (1) the reply in the form of the Issue Fee Transmittal; (2) the petition fee; and (3) the required statement of unintentional delay have been received. Accordingly, the response has been accepted as having been unintentionally delayed.

This matter is being referred to the Publishing Division for processing into a patent.

Telephone inquiries regarding this decision should be directed to the undersigned at (571) 272-3282.

Liana Chase
Petitions Examiner
Office of Petitions

DOCKETED
APR 1 0 2006
GER

DOCKETING CHECKED
APR 17 2006
CHARLES QUINN

APR 10 2006
Q

CHECKED
APR 12 2006
Sherry Barag

UNITED STATES PATENT AND TRADEMARK OFFICE

Commissioner for Patents
United States Patent and Trademark Office
P. O. Box 1450
Alexandria, VA 22313-1450
www.uspto.gov

Paper No. 7

Klarquist Sparkman, LLP
One World Trade Center
Suite 1600
121 S. W. Salmon Street
Portland, OR 97204

COPY MAILED

JUL 0 3 2003

OFFICE OF PETITIONS

In re Application of Brian Bailey, et al. Application No. 09/883,838 Filed: June 17, 2001 Attorney Docket No. 1011-64535	: : : : :	DECISION GRANTING PETITION UNDER 37 CFR 1.137(b)

This is a decision on the petition filed May 28, 2003, under 37 CFR 1.137(f) which is being treated under the unintentional provisions of 37 CFR 1.137(b), to revive the instant nonprovisional application.

The petition is **GRANTED**.

Petitioner states that the instant non-provisional application is the subject of an application filed in a foreign country on May 30, 2002. However, the U. S. Patent and Trademark Office was unintentionally not notified of this filing within 45 days subsequent to the filing of the subject application in a foreign country.

In view of the above, this application became abandoned pursuant to 35 U.S.C. § 122(b)(2)(B)(iii) and 37 CFR 1.213(c) for failure to timely notify the Office of the filing of an application in a foreign country, or under a multilateral international agreement, that requires publication of applications 18 months after filing.

A petition must be accompanied by:

(1) the reply which is met by notification of such filing in a foreign country or under a multinational treaty;

(2) the petition fee as set forth in 37 CFR 1.17(m); and

(3) a statement that the entire delay in filing the required reply from the due date for the reply until the filing of a grantable petition was unintentional.

The failure to timely notify the Office of a foreign or international filing within 45 days after the date of filing of such foreign or international application as provided by 35 USC 122(b)(2)(B)(iii) and 37 CFR 1.213(c) is accepted as having been unintentionally delayed.

The previous Request and Certification under 35 USC 122(b)(2)(B)(i) has been rescinded. A Notice Regarding Rescission of Nonpublication Request which sets forth the projected publication date of October 9, 2003 accompanies this decision on petition.

Telephone inquiries concerning this decision should be directed to the undersigned at (703) 306-3475.

This application is being forwarded to Technology Center Art Unit 2123 for examination in due course.

Marianne E. Morgan
Petitions Examiner
Office of Petitions
Office of the Deputy Commissioner
for Patent Examination Policy

ATTACHMENT: Notice Regarding Rescission of Nonpublication Request

UNITED STATES PATENT AND TRADEMARK OFFICE

Commissioner for Patents
United States Patent and Trademark Office
P.O. Box 1450
Alexandria, VA 22313-1450
www.uspto.gov

ROPES & GRAY LLP
PATENT DOCKETING 39/41
ONE INTERNATIONAL PLACE
BOSTON MA 02110-2624

COPY MAILED
NOV 24 2008

In re Application of	:	
Leona E. LING et al.	:	
Application No. 09/883,848	:	DECISION ON PETITION
Filed: June 18, 2001	:	
Attorney Docket No. CIBT-P01-119	:	

This is a decision on the petition under the unintentional provisions of 37 CFR 1.137(b), filed September 04, 2008, to revive the above-identified application.

The petition is **GRANTED**.

The two-month period for filing an appeal brief under 37 CFR 41.37 (accompanied by the fee required by 37 CFR 41.20(b)(2)), runs from the date of this decision.

This application became abandoned for failure to timely file a reply within the meaning of 37 CFR 1.113 to the final Office action of March 03, 2008. The proposed reply required for consideration of a petition to revive must be a Notice of Appeal (and appeal fee required by 37 CFR 41.20(b)(2)), an amendment that *prima facie* places the application in condition for allowance, a Request for Continued Examination (RCE) and submission (37 CFR 1.114), or the filing of a continuing application under 37 CFR 1.53(b). See MPEP 711.03(c)(III)(A)(2). No extensions of time pursuant to the provisions of 37 CFR 1.136(a) were obtained. Accordingly, the date of abandonment of this application is June 04, 2008.

The petition satisfies the requirements of 37 CFR 1.137(b) in that petitioner has supplied (1) the reply in the form of a Notice of Appeal; (2) the petition fee of 1,540.00; and (3) a proper statement of unintentional delay. Accordingly, the reply to the final Office action of March 03, 2008 is accepted as having been unintentionally delayed.

Telephone inquiries concerning this decision should be directed to undersigned at (571) 272-4231.

This application is being referred to Technology Center AU 1642 to await the filing of an appeal brief or for such other appropriate reply as may be submitted to continue prosecution of the application.

Michelle R. Eason

Michelle R. Eason
Paralegal Specialist
Office of Petitions

UNITED STATES PATENT AND TRADEMARK OFFICE

COMMISSIONER FOR PATENTS
UNITED STATES PATENT AND TRADEMARK OFFICE
WASHINGTON, D.C. 20231
www.uspto.gov

Paper No. 7

KNOBBE MARTENS OLSON & BEAR
620 NEWPORT CENTER DRIVE
SIXTEENTH FLOOR
NEWPORT BEACH, CA 92660

COPY MAILED

AUG 2 7 2002

OFFICE OF PETITIONS

In re Application of
Bogdan C. Maglich
Application No. 09/883,851
Filed: June 18, 2001
Attorney Docket No. HIENER.1CPC1CP

ON PETITION

This is a decision on the petition under 37 CFR 1.137(b), filed July 12, 2002, to revive the above-identified application.

The petition is **GRANTED**.

The above-identified application became abandoned for failure to reply in a timely manner to the Notice to File Missing Parts of Application (Notice) mailed August 13, 2001. The Notice set a period for reply of two (2) months from the mail date of the Notice. No extensions of time under the provisions of 37 CFR 1.136(a) were obtained. Accordingly, the above-identified application became abandoned on October 14, 2001.

37 CFR 1.137(b)(3) requires a statement that the entire delay in filing the required reply from the due date for the reply until the filing of a grantable petition pursuant to 37 CFR 1.137(b) was unintentional. If the statement contained in the instant petition varies from the language required by 37 CFR 1.137(b)(3), the statement contained in the instant petition is being construed as the statement required by 37 CFR 1.137(b)(3) and petitioner must notify the Office if this is **not** a correct interpretation of the statement contained in the instant petition.

Telephone inquiries concerning this decision should be directed to Wan Laymon at (703) 305-9282.

The application file is being forwarded to the Office of Initial Patent Examination.

Wan Laymon
Petitions Examiner
Office of Petitions
Office of the Deputy Commissioner
for Patent Examination Policy

UNITED STATES PATENT AND TRADEMARK OFFICE

Commissioner for Patents
United States Patent and Trademark Office
Washington, D.C. 20231
www.uspto.gov

Paper No. 15

KNOBBE, MARTENS, OLSON & BEAR, LLP
2040 MAIN STREET
FOURTEENTH FLOOR
IRVINE, CA 92614

COPY MAILED

APR 0 2 2003

OFFICE OF PETITIONS

In re Application of	:
Bogdan C. Maglich	: DECISION ON PETITION
Application No. 09/883,851	: UNDER 37 CFR 1.78(a)(3)
Filed: June 18, 2001	: AND UNDER 37 CFR 1.183
Attorney Docket No. HIENER.1CPC1CP	:

This is a decision on the petition under 37 CFR 1.78(a)(3), filed November 4, 2002, to accept an unintentionally delayed claim under 35 U.S.C. §120 for the benefit of prior-filed nonprovisional applications set forth in the amendment filed November 4, 2002.

The petition under 37 CFR 1.78(a)(3) is **Granted**.

The petition under 37 CFR 1.183 is **Dismissed**.

A petition for acceptance of a claim for late priority under 37 CFR 1.78(a)(3) is only applicable to those applications filed on or after November 29, 2000. Further, the petition is appropriate only after the expiration of the period specified in 37 CFR 1.78(a)(2)(ii). In addition, the petition under 37 CFR 1.78(a)(3) must be accompanied by:

> **(1)** the reference required by 35 U.S.C. § 120 and 37 CFR 1.78(a)(2)(i) of the prior-filed application, unless previously submitted;[1]

---

[1] Any nonprovisional application or international application designating the United States of America claiming the benefit of one or more prior-filed copending applications or international applications designating the United States of America must contain or be amended to contain a reference (amendment to the first line of the specification following the title or in an application data sheet (ADS) to each such prior-filed application, identifying it by application number (consisting of the series code and serial number) or international application number and international filing date filing date and indicating the relationship of the applications. Cross references to other related applications may be made when appropriate (*see* § 1.14).

(2) the surcharge set forth in § 1.17(t); and
(3) a statement that the entire delay between the date the claim was due under 37 CFR 1.78(a)(2)(ii) and the date the claim was filed was unintentional. The Commissioner may require additional information where there is a question whether the delay was unintentional.

The instant pending application was filed on June 18, 2001, and was pending at the time of filing of the instant petition. A reference to the prior-filed nonprovisional applications has been included in an amendment to the first sentence of the specification following the title, as required by 37 CFR 1.78(a)(2)(iii).

The instant nonprovisional application was filed after November 29, 2000, and the claim herein for the benefit of priority to the prior-filed applications is submitted after expiration of the period specified in 37 CFR 1.78(a)(2)(ii). Also, the reference to the prior-filed applications was submitted during the pendency of the instant nonprovisional application, for which the claim for benefit of priority is sought. *See* 35 U.S.C. § 120. Accordingly, having found that the instant petition for acceptance of an unintentionally delayed claim for the benefit of priority under 35 U.S.C. § 120 to the prior-filed applications satisfies the conditions of 37 CFR 1.78(a)(3), the petition is granted.

The granting of the petition to accept the delayed benefit claim to the prior applications under 37 CFR 1.78(a)(3) should <u>not</u> be construed as meaning that the instant application is entitled to the benefit of the filing date of the prior applications. In order for the instant application to be entitled to the benefit of the prior applications, all other requirements under 35 U.S.C. §120 and 37 CFR 1.78(a)(1) and (a)(2) must be met. Accordingly, the examiner will, in due course, consider this benefit claim and determine whether the instant application is entitled to the benefit of the earlier filing date.

A corrected Filing Receipt, which includes the priority claim to the prior-filed nonprovisional applications, accompanies this decision on petition.

As to the petition under 37 CFR 1.183 to waive the surcharge required by 37 CFR 1.78(a)(3)(ii):

The petition does not comply with 37 CFR 1.78(a)(2)(i), which requires that any nonprovisional application claiming the benefit of one or more prior-filed copending nonprovisional applications must contain or be amended to contain a reference to each such prior-filed application, identifying it by application number (consisting of the series code and serial number) and indicating the relationship of the applications. The relationship between the applications is whether the subject application is a continuation, divisional, or continuation-in-part of a prior-filed nonprovisional application. An example of a proper benefit claim is: "This application is a continuation of Application No. 10/---, filed---." A benefit claim that merely states: "This application claims the benefit of Application No. 10/---, filed---," does not comply with 37 CFR

1.72(a)(2)(i) since the proper relationship, which includes the type of continuing application, is not stated. Also, the status of each nonprovisional parent application (if it is patented or abandoned) should also be indicated, following the filing date of the parent nonprovisional application. See Manual of Patent Examining Procedure, 8th ed., August 2001), Section 201.11, Reference to First Application. Petitioner, upon filing the instant application did not state that the instant application is a continuation-in-part of Application No. 09/788,736, filed February 20, 2001.

For the above-noted reason, the petition under 37 CFR 1.183 cannot be granted.

This application is being forwarded to Technology Center Art Unit 3641 for consideration by the examiner of applicant's entitlement to claim for benefit of priority under 35 U.S.C. § 120 to the prior-filed nonprovisional applications.

Any inquiries concerning this decision may be directed to Karen Creasy at (703) 305-8859.

Frances Hicks
Lead Petitions Examiner
Office of Petitions
Office of the Deputy Commissioner
for Patent Examination Policy

ATTACHMENT: Corrected Filing Receipt

UNITED STATES PATENT AND TRADEMARK OFFICE

Commissioner for Patents
United States Patent and Trademark Office
P.O. Box 1450
Alexandria, VA 22313-1450
www.uspto.gov

KNOBBE MARTENS OLSON & BEAR LLP
2040 MAIN STREET
FOURTEENTH FLOOR
IRVINE CA 92614

MAILED

JUN 09 2010

OFFICE OF PETITIONS

In re Patent No. 6,988,061
Issued: January 17, 2006
Application No: 09/883,862
Filed: June 18, 2001
Attorney Docket No. CWEST.002A

This is a decision on the petition, filed March 22, 2010, under 37 CFR 1.378(c) to accept the unintentionally delayed payment of maintenance fee for the above-identified patent.

The petition is **GRANTED**.

The patent issued January 17, 2006. The grace period for paying the 3.5-year maintenance fee expired at midnight January 17, 2010. Therefore, since the petition was filed within twenty-four months after the six-month grace period provided in 37 CFR 1.362(e), this petition was timely filed under the provisions of 37 CFR 1.378(c).

The maintenance fee of $490.00 and the surcharge of $1640.00 were received March 22, 2010. The above-identified patent is hereby reinstated as of the mail date of this decision.

Telephone inquiries concerning this matter may be directed to the undersigned at (571) 272-3222.

Kenya A. McLaughlin
Petitions Attorney
Office of Petitions

UNITED STATES PATENT AND TRADEMARK OFFICE

Commissioner for Patents
United States Patent and Trademark Office
P.O. Box 1450
Alexandria, VA 22313-1450
www.uspto.gov

SCANBUY, INC.
54 WEST 39TH STREET
FOURTH FLOOR
NEW YORK NY 10018

COPY MAILED

MAY 08 2007

OFFICE OF PETITIONS

ON PETITION

In re Application of :
Attia, Olivier :
Application No. 09/883,933 :
Filed: June 20, 2001 :
Title: SYSTEM AND METHOD FOR SCAN-BASED INPUT, STORAGE AND RETRIEVAL OF INFORMATION OVER AN INTERACTIVE COMMUNICATION NETWORK :

This is a decision on the petition under 37 C.F.R. § 1.137(b), filed February 15, 2007, to revive the above-identified application.

The petition is **DISMISSED**.

Any request for reconsideration must be submitted within TWO (2) MONTHS from the mail date of this decision. No further petition fee is required for the request. Extensions of time under 37 CFR 1.136(a) are permitted. The reconsideration request should include a cover letter entitled "Renewed Petition under 37 CFR 1.137(b)." This is **not** a final agency action within the meaning of 5 U.S.C. § 704.

A grantable petition under 37 CFR 1.137(b) must be accompanied by:
(1) the required reply,[1]
(2) the petition fee,
(3) a statement that the entire delay in filing the required reply from the due date for the reply until the filing of a grantable petition pursuant to 37 CFR 1.137(b) was unintentional, and
(4) a terminal disclaimer and fee if the application was filed on or before June 8, 1995 or if the application is a design application.

Where there is a question as to whether either the abandonment or the delay in filing a petition under 37 CFR 1.137 was unintentional, the Commissioner may require additional information.[2]

---

[1] In a nonprovisional application abandoned for failure to prosecute, the required reply may be met by the filing of a continuing application. In an application or patent, abandoned or lapsed for failure to pay the issue fee or any portion thereof, the required reply must be the payment of the issue fee or any outstanding balance thereof.

[2] See MPEP 711.03(c)(III)(C) and (D).

The instant petition lacks none of the above listed items. However, it appears the petitioner is filing the instant petition on the behalf of the assignee and therefore, does not comply with 37 CFR 3.73(b). 37 CFR 3.73(b) provides that: (1) when an assignee seeks to take action in a matter before the Office, the assignee must establish its ownership of the property to the satisfaction of the Commissioner; (2) ownership is established by submitting to the Office, in the Office file related to the matter in which action is sought to be taken, documentary evidence of a chain of title from the original owner to the assignee (*e.g.*, copy of an executed assignment submitted for recording) or by specifying (*e.g.*, reel and frame number) where such evidence is recorded in the Office; (3) the submission establishing ownership must be signed by a party authorized to act on behalf of the assignee; and (4) documents submitted to establish ownership may be required to be recorded as a condition to permitting the assignee to take action in a matter pending before the Office. A 37 CFR 3.73(b) statement is enclosed for petitioner's convenience.

Further correspondence with respect to this matter should be addressed as follows:

By mail: Mail Stop PETITIONS
Commissioner for Patents
Post Office Box 1450
Alexandria, VA 22313-1450

By hand: Customer Window located at:

U.S. Patent and Trademark Office
Customer Service Window Randolph Building
401 Dulany Street
Alexandria, VA 22314

By fax: (571) 273-8300
ATTN: Office of Petitions

Any questions concerning this matter may be directed to the undersigned at (571) 272-3206.

Liana Walsh
Petitions Examiner
Office of Petitions

Enclosure: PTO/SB/96

PTO/SB/96 (04-07)
Approved for use through 09/30/2007. OMB 0651-0031
U.S. Patent and Trademark Office; U.S. DEPARTMENT OF COMMERCE
Under the Paperwork Reduction Act of 1995, no persons are required to respond to a collection of information unless it displays a valid OMB control number.

STATEMENT UNDER 37 CFR 3.73(b)

Applicant/Patent Owner: _____

Application No./Patent No.: _____ Filed/Issue Date: _____

Entitled:

_____, a _____
(Name of Assignee) (Type of Assignee, e.g., corporation, partnership, university, government agency, etc.)

states that it is:

1. ☐ the assignee of the entire right, title, and interest; or

2. ☐ an assignee of less than the entire right, title and interest
(The extent (by percentage) of its ownership interest is _____%)

in the patent application/patent identified above by virtue of either:

A. ☐ An assignment from the inventor(s) of the patent application/patent identified above. The assignment was recorded in the United States Patent and Trademark Office at Reel _____, Frame _____, or for which a copy thereof is attached.

OR

B. ☐ A chain of title from the inventor(s), of the patent application/patent identified above, to the current assignee as follows:

1. From: _____ To: _____
The document was recorded in the United States Patent and Trademark Office at
Reel _____, Frame _____, or for which a copy thereof is attached.

2. From: _____ To: _____
The document was recorded in the United States Patent and Trademark Office at
Reel _____, Frame _____, or for which a copy thereof is attached.

3. From: _____ To: _____
The document was recorded in the United States Patent and Trademark Office at
Reel _____, Frame _____, or for which a copy thereof is attached.

☐ Additional documents in the chain of title are listed on a supplemental sheet.

☐ As required by 37 CFR 3.73(b)(1)(i), the documentary evidence of the chain of title from the original owner to the assignee was, or concurrently is being, submitted for recordation pursuant to 37 CFR 3.11.

[NOTE: A separate copy (*i.e.*, a true copy of the original assignment document(s)) must be submitted to Assignment Division in accordance with 37 CFR Part 3, to record the assignment in the records of the USPTO. See MPEP 302.08]

The undersigned (whose title is supplied below) is authorized to act on behalf of the assignee.

_____	_____
Signature	Date
_____	_____
Printed or Typed Name	Telephone Number
_____	
Title	

This collection of information is required by 37 CFR 3.73(b). The information is required to obtain or retain a benefit by the public which is to file (and by the USPTO to process) an application. Confidentiality is governed by 35 U.S.C. 122 and 37 CFR 1.11 and 1.14. This collection is estimated to take 12 minutes to complete, including gathering, preparing, and submitting the completed application form to the USPTO. Time will vary depending upon the individual case. Any comments on the amount of time you require to complete this form and/or suggestions for reducing this burden, should be sent to the Chief Information Officer, U.S. Patent and Trademark Office, U.S. Department of Commerce, P.O. Box 1450, Alexandria, VA 22313-1450. DO NOT SEND FEES OR COMPLETED FORMS TO THIS ADDRESS. **SEND TO: Commissioner for Patents, P.O. Box 1450, Alexandria, VA 22313-1450.**

If you need assistance in completing the form, call 1-800-PTO-9199 and select option 2.

Privacy Act Statement

The **Privacy Act of 1974 (P.L. 93-579)** requires that you be given certain information in connection with your submission of the attached form related to a patent application or patent. Accordingly, pursuant to the requirements of the Act, please be advised that: (1) the general authority for the collection of this information is 35 U.S.C. 2(b)(2); (2) furnishing of the information solicited is voluntary; and (3) the principal purpose for which the information is used by the U.S. Patent and Trademark Office is to process and/or examine your submission related to a patent application or patent. If you do not furnish the requested information, the U.S. Patent and Trademark Office may not be able to process and/or examine your submission, which may result in termination of proceedings or abandonment of the application or expiration of the patent.

The information provided by you in this form will be subject to the following routine uses:

1. The information on this form will be treated confidentially to the extent allowed under the Freedom of Information Act (5 U.S.C. 552) and the Privacy Act (5 U.S.C 552a). Records from this system of records may be disclosed to the Department of Justice to determine whether disclosure of these records is required by the Freedom of Information Act.
2. A record from this system of records may be disclosed, as a routine use, in the course of presenting evidence to a court, magistrate, or administrative tribunal, including disclosures to opposing counsel in the course of settlement negotiations.
3. A record in this system of records may be disclosed, as a routine use, to a Member of Congress submitting a request involving an individual, to whom the record pertains, when the individual has requested assistance from the Member with respect to the subject matter of the record.
4. A record in this system of records may be disclosed, as a routine use, to a contractor of the Agency having need for the information in order to perform a contract. Recipients of information shall be required to comply with the requirements of the Privacy Act of 1974, as amended, pursuant to 5 U.S.C. 552a(m).
5. A record related to an International Application filed under the Patent Cooperation Treaty in this system of records may be disclosed, as a routine use, to the International Bureau of the World Intellectual Property Organization, pursuant to the Patent Cooperation Treaty.
6. A record in this system of records may be disclosed, as a routine use, to another federal agency for purposes of National Security review (35 U.S.C. 181) and for review pursuant to the Atomic Energy Act (42 U.S.C. 218(c)).
7. A record from this system of records may be disclosed, as a routine use, to the Administrator, General Services, or his/her designee, during an inspection of records conducted by GSA as part of that agency's responsibility to recommend improvements in records management practices and programs, under authority of 44 U.S.C. 2904 and 2906. Such disclosure shall be made in accordance with the GSA regulations governing inspection of records for this purpose, and any other relevant (*i.e.*, GSA or Commerce) directive. Such disclosure shall not be used to make determinations about individuals.
8. A record from this system of records may be disclosed, as a routine use, to the public after either publication of the application pursuant to 35 U.S.C. 122(b) or issuance of a patent pursuant to 35 U.S.C. 151. Further, a record may be disclosed, subject to the limitations of 37 CFR 1.14, as a routine use, to the public if the record was filed in an application which became abandoned or in which the proceedings were terminated and which application is referenced by either a published application, an application open to public inspection or an issued patent.
9. A record from this system of records may be disclosed, as a routine use, to a Federal, State, or local law enforcement agency, if the USPTO becomes aware of a violation or potential violation of law or regulation.

UNITED STATES PATENT AND TRADEMARK OFFICE

Commissioner for Patents
United States Patent and Trademark Office
P.O. Box 1450
Alexandria, VA 22313-1450
www.uspto.gov

SCANBUY, INC.
54 WEST 39TH STREET
FOURTH FLOOR
NEW YORK NY 10018

COPY MAILED

AUG 07 2007

OFFICE OF PETITIONS

ON PETITION

In re Application of :
Attia, Olivier :
Application No. 09/883,933 :
Filed: June 20, 2001 :
Attorney Docket No. SYSTEM AND METHOD FOR SCAN-BASED INPUT, STORAGE AND RETRIEVAL OF INFORMATION OVER AN INTERACTIVE COMMUNICATION NETWORK :

This is a decision on the renewed petition under 37 C.F.R. § 1.137(b), filed May 15, 2007, to revive the above-identified application.

The petition is **GRANTED.**

Petitioner has submitted the requisite Statement under 37 CFR 3.73(b).

This matter is being referred to Technology Center 3600 for processing of the Request for Continued Examination under 37 CFR 1.114 filed previously on February 15, 2007.

Telephone inquiries regarding this decision should be directed to the undersigned at (571) 272-3206.

Liana Walsh
Petitions Examiner
Office of Petitions

SPE RESPONSE FOR CERTIFICATE OF CORRECTION

Paper No.: _____

DATE : March 21, 2005

TO SPE OF : ART UNIT 2874

SUBJECT : Request for Certificate of Correction on Patent No.: 6798960

A response is requested with respect to the accompanying request for a certificate of correction.

Please complete this form and return with file, within 7 days to:

Certificates of Correction Branch - ST – 9A22

Palm location **7580** - Tel. No. 308-9390 ext. 120

With respect to the change(s) requested, correcting Office and/or Applicant's errors, ***should the patent read as shown in the certificate of correction***? No new matter should be introduced, nor should the scope or meaning of the claims be changed.

Please see the References Cited "Other Publications" and IFW code IDS June, 2003 and COCIN

Thank You For Your Assistance

Stacy Powell

Certificates of Correction Branch

The request for issuing the above-identified correction(s) is hereby:

Note your decision on the appropriate box.

- ☑ **Approved** — **All** changes apply.
- ☐ **Approved in Part** — Specify below which changes **do not** apply.
- ☐ **Denied** — State the reasons for denial below.

Comments:

SPE

2874

Art Unit

Sheet 1 of 1

FORM PTO 1449 (modified)

U.S. DEPARTMENT OF COMMERCE
PATENT AND TRADEMARK OFFICE

LIST OF REFERENCES CITED BY APPLICANT(S)
(Use several sheets if necessary)

Date Submitted to PTO: June 9, 2003

ATTY DOCKET NO.	SERIAL NO.
2001_0776A	09/883,949

APPLICANT: Hidenobu HAMADA

FILING DATE	GROUP
June 20, 2001	2878

OIPE JC99 JUN 0 9 2003 PATENT & TRADEMARK OFFICE

U.S. PATENT DOCUMENTS

*EXAMINER INITIAL		DOCUMENT NUMBER	DATE	NAME	CLASS	SUBCLASS	FILING DATE IF APPROPRIATE
JTR	AA	6,075,915	6/2000	Koops et al.			
	AB						
	AC						
	AD						
	AE						
	AF						
	AG						
	AH						
	AI						

FOREIGN PATENT DOCUMENTS

		DOCUMENT NUMBER	DATE	COUNTRY	CLASS	SUBCLASS	TRANSLATION YES	TRANSLATION NO
JTR	AJ	11-266055	9/1999	JP			Partial	
JTR	AK	10-261244	9/1998	JP			Partial	
JTR	AL	11-218627	8/1999	JP			Partial	
JTR	AM	2000-055941	2/2000	JP			Abstract	
JTR	AN	98/44367	10/1998	WO			Abstract	
JTR	AO	1 103 829	5/2001	EP				

OTHER DOCUMENT(S) (Including Author, Title, Date, Pertinent Pages, Etc.)

JTR	AP	Knight et al, "All-silica single-mode optical fiber with photonic crystal cladding", Optics Letters, Vol. 21, No. 19, pp.1547-1549
	AQ	

EXAMINER: [signature] DATE CONSIDERED: 2/4/04

*EXAMINER: Initial if reference considered, whether or not citation is in conformance with MPEP 609; Draw line through citation if not in conformance and not considered. Include copy of this form with next communication to applicant.

COPY

UNITED STATES PATENT AND TRADEMARK OFFICE

COMMISSIONER FOR PATENTS
UNITED STATES PATENT AND TRADEMARK OFFICE
WASHINGTON, D.C. 20231
www.uspto.gov

Paper No. 4

Pillsbury Winthrop LLP
1600 Tysons Blvd.
McLean, VA 22102

MAIL

JUL 15 2002

DIRECTOR OFFICE
TECHNOLOGY CENTER 2100

In re Application of:)
Charle' R. Rupp)
Application No. 09/883,976)
Filed: June 19, 2001) **DECISION ON REQUEST FOR**
For: MULTI-SCALE PROGRAMMABLE) **WITHDRAWAL AS ATTORNEY**
ARRAY)

This is a decision on the Request To Withdraw from Representation filed May 22, 2002.

A grantable request to withdraw as attorney of record should indicate thereon the present mailing addresses of the attorney(s) who is/are withdrawing from the record and of the applicant. The request for withdrawal must be signed by every attorney seeking to withdraw or contain a clear indication that one attorney is signing on behalf of another/others. A request to withdraw will not be approved unless at least 30 (thirty) days would remain between the date of approval and the later of the expiration date of a time to file a response or the expiration date of the maximum time period which can be extended under 37 C.F.R. § 1. 136(a). The effective date of withdrawal being the date of decision and not the date of request. See M.P.E.P. § 402.06. 37 C.F.R. § 1.36 further requires that the applicant or patent owner be notified of the withdrawal of the attorney or agent.

The request is **GRANTED**.

All future communications from the Office will be directed to the below-listed address until otherwise notified by applicant. This correspondence address is provided by the withdrawn attorney(s). Applicant is reminded of the obligation to promptly notify the Patent and Trademark Office (Office) of any change in correspondence address to ensure receipt of all communications from the Office.

Vincent N. Trans
Special Programs Examiner
Technology Center 2100
Computer Architecture and Software
(703) 305-9750

cc: William Galliani, Esq.
Cooley Godward LLP
5 Palo Alto Square
3000 El Camino Real
Palo Alto, CA 94306-2155

UNITED STATES PATENT AND TRADEMARK OFFICE

Commissioner for Patents
United States Patent and Trademark Office
P.O. Box 1450
Alexandria, VA 22313-1450
www.uspto.gov
DIW Jun-07

FLOYD E. IVEY
LIEBLER, IVEY & CONNOR
P.O. BOX 6125
KENNEWICK WA 99336

COPY MAILED

JUN 26 2007

OFFICE OF PETITIONS

In re Patent No. 6592193	:	
Issued: 07/15/2003	:	LETTER
Application No. 09/884011	:	
Filed: 06/18/2001	:	
Attorney Docket Number: P-1474-011	:	

This is a letter in reference to the paper filed on 30 April, 2007, styled as a petition under 37 CFR 1.378(b).

A review of the record reveals that the window for payment of the first maintenance fee in this patent opened on 17 July, 2006. The maintenance fee was due with a surcharge on 17 January, 2007. The window for payment of the first maintenance fee with a charge will close on 16 July, 2007.

As the maintenance fee and surcharge were paid prior to the closing of the window for payment, the patent has not expired, and no petition is necessary.

The maintenance fee and surcharge are accepted by way of this communication.

Telephone inquiries related to this decision should be directed to the undersigned at (571) 272-3231.

D Wood

Douglas I. Wood
Senior Petitions Attorney
Office of Petitions

UNITED STATES PATENT AND TRADEMARK OFFICE

UNITED STATES DEPARTMENT OF COMMERCE
United States Patent and Trademark Office
Address: COMMISSIONER FOR PATENTS
P.O. Box 1450
Alexandria, Virginia 22313-1450
www.uspto.gov

DLA PIPER LLP US
P. O. BOX 2758
RESTON, VA 20195

Mail Date: 04/21/2010

Applicant	: Frampton E. Ellis III	: DECISION ON REQUEST FOR
Patent Number	: 7606854	: RECALCULATION of PATENT
Issue Date	: 10/20/2009	: TERM ADJUSTMENT IN VIEW
Appliction No	: 09/884,041	: OF WYETH AND NOTICE OF INTENT TO
Filed	: 06/20/2001	: ISSUE CERTIFICATE OF CORRECTION
		:

The Request for Recalculation is **GRANTED** to the extent indicated.

The patent term adjustment has been determined to be **1750** days. The USPTO will *sua sponte* issue a certificate of correction reflecting the amount of PTA days determined by the recalculation.

Prior to the issuance of the certificate of correction, the USPTO will afford patentee an opportunity to be heard and request reconsideration. Accordingly, patentee has **one month or thirty (30) days**, whichever is longer, to file a request for reconsideration of this patent term adjustment calculation. See 35 U.S.C. 154(b)(3)(B)(ii) and 37 CFR 1.322(a)(4). No extensions of time will be granted under 37 CFR 1.136.

Patentee should use document code PET.OP if electronically filing a request for reconsideration of this patent term adjustment calculation. The patentee must also include the information required by 37 CFR 1.705(b)(2) and the fee required by 37 CFR 1.18(e). If patentee does not file a timely request for reconsideration of this patent term adjustment calculation including the information required by 37 CFR 1.705(b)(2) and the fee required by 37 CFR 1.18(e), the USPTO will issue a certificate of correction reflecting the PTA determination noted above.

Patentee should be aware that in order to preserve the right to review in the United States District Court for the District of Columbia of the USPTO patent term adjustment determination, patentee must ensure that he or she also take the steps required under 35 U.S.C. 154(b)(4)(A) in a timely manner. Nothing in the request for recalculation should be construed as providing an alternative time frame for commencing a civil action under 35 U.S.C. 154(b)(4)(A).

Any questions concerning this decision should be directed to the Office of Patent Legal Administration at 571-272-7702.

UNITED STATES PATENT AND TRADEMARK OFFICE

UNITED STATES DEPARTMENT OF COMMERCE
United States Patent and Trademark Office
Address: COMMISSIONER FOR PATENTS
P.O. Box 1450
Alexandria, Virginia 22313-1450
www.uspto.gov

DLA PIPER LLP US
P. O. BOX 2758
RESTON, VA 20195

Mail Date: 05/18/2010

Applicant : Frampton E. Ellis III
Patent Number : 7606854
Issue Date : 10/20/2009
Application No : 09/884,041
Filed : 06/20/2001

: NOTICE CONCERNING IMPROPER
: CALCULATION OF PATENT TERM
: ADJUSTMENT BASED UPON USPTO
: IMPROPERLY MEASURING REDUCTION
: PERIOD UNDER 37 CFR 1.704(c)(10).

The United States Patent and Trademark Office (USPTO) discovered that in processing the recent recalculation decisions mailed in response to patentee's filed Request for Recalculation of Patent Term Adjustment in view of Wyeth, the USPTO improperly measured the reduction period for reductions under 37 CFR 1.704(c)(10). Pursuant to 37 CFR 1.704(c)(10), patentee's reduction begins on the date of filing the amendment under 37 CFR 1.312 ("1.312 amendment") or other related paper and ends on the date that the Office mails a response to the filing of the 1.312 amendment or other paper. It has been discovered that during the recalculation, the calculation failed to the limit the reduction to the mail date of the response to the 1.312 amendment or other paper. Accordingly, patentee's reductions were greater than warranted.

This notice **VACATES** the previous GRANTED request for recalculation and provides patentee with a revised GRANTED recalculation.

The patent term adjustment has been determined to be **1856** days. The USPTO will *sua sponte* issue a certificate of correction reflecting the amount of patent term adjustment (PTA) days determined by the recalculation.

Prior to the issuance of the certificate of correction, the USPTO will afford patentee an opportunity to be heard and request reconsideration. Accordingly, patentee has **one month or thirty (30) days** from the mail date of this notice, whichever is longer, to file a request for reconsideration of this PTA calculation. See 35 U.S.C. § 154(b)(3)(B)(ii) and 37 CFR 1.322(a)(4).

Patentee should use document code PET.OP if electronically filing a request for reconsideration of this PTA calculation. The patentee must also include the information required by 37 CFR 1.705(b)(2), and the fee required by 37 CFR 1.18(e). If patentee does not file a timely request for reconsideration of this PTA calculation, including the information required by 37 CFR 1.705(b)(2) and the fee required by 37 CFR 1.18(e), the USPTO will issue a certificate of correction reflecting the PTA determination noted above.

Patentee should be aware that in order to preserve the right of review of the USPTO's PTA determination in the United States District Court for the District of Columbia, patentee must ensure that the steps required under 35 U.S.C. § 154 (b)(4) are taken in a timely manner. Nothing in the request for recalculation should be construed as providing an alternative time frame for commencing a civil action under 35 U.S.C. § 154(b)(4).

Approved for use through 04/30/2009. OMB 0651-0016
U.S. Patent and Trademark Office: U.S. DEPARTMENT OF COMMERCE
Under the Paperwork Reduction Act of 1995, no persons are required to respond to a collection of information unless it displays valid OMB control number.

PETITION TO ACCEPT UNINTENTIONALLY DELAYED PAYMENT OF MAINTENANCE FEE IN AN EXPIRED PATENT (37 CFR 1.378(c))

Patent Number	Issue Date (YYYY-MM-DD)	Application Number	Filing Date (YYYY-MM-DD)	Docket Number (if applicable)
6,497,208	2002-12-24	09/884,075	2001-06-20	ID #015507 (JLR)

CAUTION: Maintenance fee (and surcharge, if any) payment must correctly identify: (1) the patent number and (2) the application number of the actual U.S. application leading to issuance of that patent to ensure the fee(s) is/are associated with the correct patent. 37 CFR 1.366(c) and (d).

SMALL ENTITY
☐ Patentee claims, or has previously claimed, small entity status. See 37 CFR 1.27.

LOSS OF ENTITLEMENT TO SMALL ENTITY STATUS
☐ Patentee is no longer entitled to small entity status. See 37 CFR 1.27(g)

NOT Small Entity		Small Entity	
Fee	Code	Fee	Code
◉ 3 ½ year	(1551)	○ 3 ½ year	(2551)
○ 7 ½ year	(1552)	○ 7 ½ year	(2552)
○ 11 ½ year	(1553)	○ 11 ½ year	(2553)

SURCHARGE
The surcharge required by 37 CFR 1.20(i)(2) (Fee Code 1558) must be paid as a condition of accepting unintentionally delayed payment of the maintenance fee.

MAINTENANCE FEE (37 CFR 1.20(e)-(g))
The appropriate maintenance fee must be submitted with this petition.

STATEMENT
THE UNDERSIGNED CERTIFIES THAT THE DELAY IN PAYMENT OF THE MAINTENANCE FEE TO THIS PATENT WAS UNINTENTIONAL

PETITIONER(S) REQUEST THAT THE DELAYED PAYMENT OF THE MAINTENANCE FEE BE ACCEPTED AND THE PATENT REINSTATED

THIS PORTION MUST BE COMPLETED BY THE SIGNATORY OR SIGNATORIES

37 CFR 1.378(d) states: "Any petition under this section must be signed by an attorney or agent registered to practice before the Patent and Trademark Office, or by the patentee, the assignee, or other party in interest."

I certify, in accordance with 37 CFR 1.4(d)(4) that I am

◉ An attorney or agent registered to practice before the Patent and Trademark Office

○ A sole patentee

○ A joint patentee; I certify that I am authorized to sign this submission on behalf of all the other patentees.

○ A joint patentee; all of whom are signing this e-petition

○ The assignee of record of the entire interest

Patent Practitioner			
A signature of the applicant or representative is required in accordance with 37 CFR 1.33 and 10.18. Please see 37 CFR 1.4(d) for the form of the signature			
Signature	/DJCushing/	Date (YYYY-MM-DD)	2007-03-08
Name	David J. Cushing	Registration Number	28703

This collection of information is required by 37 CFR 1.378(c). The information is required to obtain or retain a benefit by the public which is to file (and by the USPTO to process) an application. Confidentiality is governed by 35 U.S.C. 122 and 37 CFR 1.11 and 1.14. This collection is estimated to take 1 hour to complete, including gathering, preparing, and submitting the completed application form to the USPTO. Time will vary depending upon the individual case. Any comments on the amount of time you require to complete this form and/ or suggestions for reducing this burden, should be sent to the Chief Information Officer, U.S. Patent and Trademark Office, U.S. Department of Commerce, P.O. Box 1450, Alexandria, VA 22313-1450. DO NOT SEND FEES OR COMPLETED FORMS TO THIS ADDRESS. **This form can only be used when in conjunction with EFS-Web. If this form is mailed to the USPTO, it may cause delays in reinstating the patent.**

Privacy Act Statement

The Privacy Act of 1974 (P.L. 93-579) requires that you be given certain information in connection with your submission of the attached form related to a patent application or patent. Accordingly, pursuant to the requirements of the Act, please be advised that: (1) the general authority for the collection of this information is 35 U.S.C. 2(b)(2); (2) furnishing of the information solicited is voluntary; and (3) the principal purpose for which the information is used by the U.S. Patent and Trademark Office is to process and/or examine your submission related to a patent application or patent. If you do not furnish the requested information, the U.S. Patent and Trademark Office may not be able to process and/or examine your submission, which may result in termination of proceedings or abandonment of the application or expiration of the patent.

The information provided by you in this form will be subject to the following routine uses:

1. The information on this form will be treated confidentially to the extent allowed under the Freedom of Information Act (5 U.S.C. 552) and the Privacy Act (5 U.S.C. 552a). Records from this system of records may be disclosed to the Department of Justice to determine whether the Freedom of Information Act requires disclosure of these record s.

2. A record from this system of records may be disclosed, as a routine use, in the course of presenting evidence to a court, magistrate, or administrative tribunal, including disclosures to opposing counsel in the course of settlement negotiations.

3. A record in this system of records may be disclosed, as a routine use, to a Member of Congress submitting a request involving an individual, to whom the record pertains, when the individual has requested assistance from the Member with respect to the subject matter of the record.

4. A record in this system of records may be disclosed, as a routine use, to a contractor of the Agency having need for the information in order to perform a contract. Recipients of information shall be required to comply with the requirements of the Privacy Act of 1974, as amended, pursuant to 5 U.S.C. 552a(m).

5. A record related to an International Application filed under the Patent Cooperation Treaty in this system of records may be disclosed, as a routine use, to the International Bureau of the World Intellectual Property Organization, pursuant to the Patent Cooperation Treaty.

6. A record in this system of records may be disclosed, as a routine use, to another federal agency for purposes of National Security review (35 U.S.C. 181) and for review pursuant to the Atomic Energy Act (42 U.S.C. 218(c)).

7. A record from this system of records may be disclosed, as a routine use, to the Administrator, General Services, or his/her designee, during an inspection of records conducted by GSA as part of that agency's responsibility to recommend improvements in records management practices and programs, under authority of 44 U.S.C. 2904 and 2906. Such disclosure shall be made in accordance with the GSA regulations governing inspection of records for this purpose, and any other relevant (i.e., GSA or Commerce) directive. Such disclosure shall not be used to make determinations about individuals.

8. A record from this system of records may be disclosed, as a routine use, to the public after either publication of the application pursuant to 35 U.S.C. 122(b) or issuance of a patent pursuant to 35 U.S.C. 151. Further, a record may be disclosed, subject to the limitations of 37 CFR 1.14, as a routine use, to the public if the record was filed in an application which became abandoned or in which the proceedings were terminated and which application is referenced by either a published application, an application open to public inspections or an issued patent.

9. A record from this system of records may be disclosed, as a routine use, to a Federal, State, or local law enforcement agency, if the USPTO becomes aware of a violation or potential violation of law or regulation.

UNITED STATES PATENT AND TRADEMARK OFFICE

Commissioner for Patents
United States Patent and Trademark Office
P.O. Box 1450
Alexandria, VA 22313-1450
www.uspto.gov

In re Patent No. 6497208
Issue Date: December 24,2002
Application No. 09884075
Filed: June 20,2001
Attorney Docket No. Q61771

:

:DECISION GRANTING PETITION
:UNDER 37 CFR 1.378(c)

:

This is a decision on the electronic petition, filed March 8,2007 ,under 37 CFR 1.378(c) to accept the unintentionally delayed payment of the 3.5 year maintenance fee for the above-identified patent.

The petition is GRANTED.

The maintenance fee is accepted, and the above-identified patent reinstated as of March 8,2007 . This decision also constitutes notice that the fee has been accepted. An electronic copy of the petition and this decision has been created as an entry in an Image File Wrapper. Nevertheless, petitioner should print and retain an independent copy

Telephone inquires related to this electronic decision should be directed to the Electronic Business Center at 1-866-217-9197.

UNITED STATES PATENT AND TRADEMARK OFFICE

Commissioner for Patents
United States Patent and Trademark Office
P.O. Box 1450
Alexandria, VA 22313-1450
www.uspto.gov

LACASSE & ASSOCIATES
1725 DUKE STREET
SUITE 650
ALEXANDRIA VA 22314

COPY MAILED

AUG 0 6 2004

OFFICE OF PETITIONS

In re Application of :
Takeshi Aikiyo et al :
Application No. 09/884,147 : DECISION ON PETITION
Filed: June 20, 2001 : UNDER 37 CFR 1.78(a)(3)
Attorney Docket No. FP 672-US(CIP)PCT :

This is a decision on the petition under 37 CFR 1.78(a)(3), filed July 16, 2004, to accept an unintentionally delayed claim under 35 U.S.C. § 120 for the benefit of priority to the prior-filed nonprovisional application set forth in the amendment embodied in the instant petition.

The petition is **GRANTED**.

A petition for acceptance of a claim for late priority under 37 CFR 1.78(a)(3) is only applicable to those applications filed on or after November 29, 2000. Further, the petition is appropriate only after the expiration of the period specified in 37 CFR 1.78(a)(2)(ii). In addition, the petition under 37 CFR 1.78(a)(3) must be accompanied by:

> **(1)** the reference required by 35 U.S.C. § 120 and 37 CFR 1.78(a)(2)(i) of the prior-filed application, unless previously submitted;[1]
> **(2)** the surcharge set forth in § 1.17(t); and
> **(3)** a statement that the entire delay between the date the claim was due under 37 CFR 1.78(a)(2)(ii) and the date the claim was filed was unintentional. The Commissioner may require additional information where there is a question whether the delay was unintentional.

---

[1] Any nonprovisional application or international application designating the United States of America claiming the benefit of one or more prior-filed copending applications or international applications designating the United States of America must contain or be amended to contain a reference (amendment to the first line of the specification following the title or in an application data sheet (ADS) to each such prior-filed application, identifying it by application number (consisting of the series code and serial number) or international application number and international filing date filing date and indicating the relationship of the applications. Cross references to other related applications may be made when appropriate (*see* § 1.14).

The instant pending application was filed on June 20, 2001, and was pending at the time of filing of the instant petition. A reference to the prior-filed nonprovisional application has been included in an amendment to the first sentence of the specification following the title, and an Application Data Sheet as required by 37 CFR 1.78(a)(2)(iii).

The instant nonprovisional application was filed after November 29, 2000, and the claim herein for the benefit of priority to the prior-filed nonprovisional application is submitted after expiration of the period specified in 37 CFR 1.78(a)(2)(ii). Also, the reference to the prior-filed nonprovisional application was submitted during the pendency of the instant nonprovisional application, for which the claim for benefit of priority is sought. *See* 35 U.S.C. § 120. Accordingly, having found that the instant petition for acceptance of an unintentionally delayed claim for the benefit of priority under 35 U.S.C. § 120 to the prior-filed nonprovisional application satisfies the conditions of 37 CFR 1.78(a)(3), the petition is granted.

The granting of the petition to accept the delayed benefit claim to the prior-filed application under 37 CFR 1.78(a)(3) should not be construed as meaning that the instant application is entitled to the benefit of the prior-filed application. In order for the instant application to be entitled to the benefit of the prior-filed application, all other requirements under 35 U.S.C. § 120 and 37 CFR 1.78(a)(1) and (a)(2) must be met. Similarly, the fact that the corrected Filing Receipt accompanying this decision on petition includes the prior-filed application should not be construed as meaning that applicant is entitled to the claim for benefit of priority to the prior-filed application noted thereon. Accordingly, the examiner will, in due course, consider this benefit claim and determine whether the instant application is entitled to the benefit of the earlier filing date.

A corrected Filing Receipt, which includes the priority claim to the prior-filed nonprovisional application, accompanies this decision on petition.

Any inquiries concerning this decision may be directed to the undersigned at (703) 305-8859.

The examiner of Technology Center Art Unit 2828 will consider applicant's entitlement to claim benefit of priority under 35 U.S.C. § 120 to prior-filed nonprovisional Application No. 09/443,322, filed November 19, 1999.

Karen Creasy

Karen Creasy
Petitions Examiner
Office of Petitions
Office of the Deputy Commissioner
for Patent Examination Policy

ATTACHMENT: Corrected Filing Receipt

UNITED STATES PATENT AND TRADEMARK OFFICE

COMMISSIONER FOR PATENTS
UNITED STATES PATENT AND TRADEMARK OFFICE
P.O. BOX 1450
ALEXANDRIA, VA 22313-1450
www.uspto.gov

Paper No. 10

DEC 22 2003

In re Application of	:	
Judd Zebersky	:	
Serial No. 09/884,191	:	DECISION ON PETITION
Filed: June 19, 2001	:	REGARDING WITHDRAWAL
For: MODULAR HOUSE TOY	:	OF ATTORNEY

Counsel has filed a petition on December 10, 2003, 2003, seeking to withdraw from prosecution in this application. The petition is DENIED.

As noted at MPEP 402.06, the usual requirement is that there be at least thirty days between approval of a request to withdraw as attorney and the date of expiration of a running time period. While this requirement is now construed as permitting withdrawal when an extension to a running time period is available so as to achieve the thirty days between approval of a request to withdraw and the expiration date, it is noted that this application had an Office Action mailed on July 11, 2003, with a response being due on or before October 11, 2003, although the response period could have been extended until January 11, 2004.

Accordingly, since there are not thirty days remaining between approval of the withdrawal and the expiration date of the running time period, the withdrawal cannot be permitted.

WITHDRAW DENIED.

E. Rollins-Cross, Director
Technology Center 3700

Lerner and Greenberg, PA
P.O. Box 2480
Hollywood, FL 33022-2480

UNITED STATES PATENT AND TRADEMARK OFFICE

COMMISSIONER FOR PATENTS
UNITED STATES PATENT AND TRADEMARK OFFICE
P.O. BOX 1450
ALEXANDRIA, VA 22313-1450
www.uspto.gov

Paper No. 5

Weiss & Moy
4204 North Brown Avenue
Scottsdale, AZ 85251

COPY MAILED

DEC 15 2003

OFFICE OF PETITIONS
ON PETITION

In re Application of :
Huemoeller et al. :
Application No. 09/884,193 :
Filed: June 19, 2001 :
Attorney Docket No. W2K1035 :

This is a decision on the petition under 37 CFR 1.137(b), filed November 10, 2003, to revive the above-identified application.

The petition is GRANTED.

The above-identified application became abandoned for failure to reply in a timely manner to the non-final Office action mailed August 15, 2001, which set a period for reply of two (2) months. No extensions of time under the provisions of 37 CFR 1.136(a) was obtained. Accordingly, the above-identified application became abandoned on October 16, 2001.

Telephone inquiries concerning this decision should be directed to Latrice Bond at (703) 308-6911.

The application file is being forwarded to the Office of Initial Patent Examination Division for further processing.

Latrice Bond

Latrice Bond
Paralegal Specialist
Office of Petitions
Office of the Deputy Commissioner
for Patent Examination Policy

UNITED STATES PATENT AND TRADEMARK OFFICE

Commissioner for Patents
United States Patent and Trademark Office
P.O. Box 1450
Alexandria, VA 22313-1450
www.uspto.gov

MAY 19 2006

Indianapolis Office 27879
Brinks, Hofer, Gilson & Lione
One Indiana Square, Suite 1600
Indianapolis, IN 46204-2033

In re Application of: Richard E. Auerbach, et al. :
Appl. No.: 09/884,231 : DECISION ON PETITION
Filed: June 19, 2001 :
For: Woven Spider for Loudspeaker :
Attorney Docket No.: 11336/431 (PO1050US)

This is a decision on the petition filed on April 8, 2005 by which petitioners requested reconsideration and withdrawal of the restriction requirement rendered July 27, 2004. The petition is considered pursuant to 37 CFR 1.144, and no fee is required.

The restriction requirement rendered on July 27, 2004 required Applicant to elect a single species for prosecution from five identified species A-E. Claims 1-19 and 28-37 were the only claims present in the case at that point in the prosecution; claims 20-27 having been cancelled as a result of previous prosecution. In response to the restriction requirement dated November 1, 2004, Applicant complied by electing a single species with traverse and added new claims 38-43.

The invention disclosed in this application involves a method of making a moving coil transducer (i.e., a loudspeaker), part of which involves a method of making a woven spider and incorporating the spider into the moving coil transducer. The method of making the woven spider is a subcombination method of the combination method of making the moving coil transducer. The only species disclosed in this application is illustrated in figures 3a and 3b, wherein the wrapped electrical conductors are woven into the cloth of the spider in a parallel, side-by-side manner, and figures 4a and 4b, wherein the wrapped electrical conductors are first twisted and then woven into the cloth of the spider.

Of the claims 1-19 and 28-43, only claim 5 was specific to the species illustrated in figures 4a and 4b. All the remaining claims were generic to both embodiments by setting forth features that were applicable to both embodiments. In any event, Applicant elected species D and agreed that claim 1 was generic which resulted in the examination of claims 1 and 28-33. Claims 1 and 28-33 were finally rejected in the final Office action dated January 14, 2005 and claims 2-19 and 34-43 were withdrawn from further consideration under 37 CFR 1.142(b).

On April 8, 2005, in response to the final rejection, Applicant submitted an amendment after final rejection indicating claims 1 and 28-33 (previously presented); claims 2-19 and 34-43 (withdrawn); claims 20-27 (cancelled) and claim 44 (never previously presented, but nonetheless

withdrawn). The Examiner, as indicated in the advisory action dated April 25, 2005, did not enter this amendment.

On July 12, 2005, Applicant submitted a request for continued examination (RCE) accompanied by amendments to the claims cancelling claim 1-27 and 34-44 and adding new claims 45- 69. These new claims were a reiteration of the previously cancelled claims including claim 60, which was specific to the species illustrated in figures 4a and 4b.

On October 5, 2005, the Examiner rendered another restriction requiring the Applicant to elect one of six groupings of claims; each grouped invention indicated as a subcombination usable together.

On November 3, 2005, the Applicant responded to the restriction requirement with traverse, elected one of the grouped inventions for prosecution, cancelled claim 67 and added new claims 70-76.

On January 26, 2006, after carefully considering Applicant's response dated November 3, 2005, the Examiner withdrew the restriction requirement and indicated claims 28-33, 45-66 and 68-76 allowable.

From the prosecution of this application, it is apparent that the petition filed on April 8, 2005 was addressed as a request for reconsideration in the Office action dated January 26, 2006 and is therefore, considered moot and thus dismissed.

PETITION DISMISSED.

Frederick R. Schmidt, Director
Technology Center 3700

UNITED STATES PATENT AND TRADEMARK OFFICE

Commissioner for Patents
United States Patent and Trademark Office
P.O. Box 1450
Alexandria, VA 22313-1450
www.uspto.gov

TROY J. COLE
WOODARD EMHARDT NAUGHTON
MORIARTY AND MCNETT
BANK ONE CENTER / TOWER
111 MONUMENT CIRCLE, SUITE 3700
INDIANAPOLIS, IN 46204-5137

COPY MAILED

JUL 0 7 2008

OFFICE OF PETITIONS

In re Application of :
Jingsong Xia et al :
Application No. 09/884,256 : ON PETITION
Filed: June 19, 2001 :
Attorney Docket No. 31075-7 EQ3 :

This is a decision on the petition filed March 26, 2008 under 37 CFR 1.137(b), to revive the above-identified application.

The petition is **GRANTED.**

The above-identified application became abandoned for failure to submit the Issue fee and Publication fee in a timely manner in reply to the Notice of Allowance mailed October 24, 2007, which set a statutory period for reply of three (3) months. Accordingly, the above-identified application became abandoned on January 25, 2008.

The petition satisfies the conditions for revival pursuant to the provisions of 37 CFR 1.137(b) in that (1) the reply in the form of payment of the Issue fee and Publication fee; (2) the petition fee; and (3) the required statement of unintentional delay have been received. Accordingly, the issue fee is accepted as having been unintentionally delayed.

Telephone inquiries concerning this decision should be directed to the undersigned at (571) 272-3210.

This matter is being referred to the Office of Data Management for further processing.

Irvin Dingle
Petitions Examiner
Office of Petitions

Under the Paperwork Reduction Act of 1995, no persons are required to respond to a collection of information unless it displays valid OMB control number.

PETITION TO ACCEPT UNINTENTIONALLY DELAYED PAYMENT OF MAINTENANCE FEE IN AN EXPIRED PATENT (37 CFR 1.378(c))

Patent Number	Issue Date (YYYY-MM-DD)	Application Number	Filing Date (YYYY-MM-DD)	Docket Number (if applicable)

CAUTION: Maintenance fee (and surcharge, if any) payment must correctly identify: (1) the patent number and (2) the application number of the actual U.S. application leading to issuance of that patent to ensure the fee(s) is/are associated with the correct patent. 37 CFR 1.366(c) and (d).

SMALL ENTITY

☐ Patentee claims, or has previously claimed, small entity status. See 37 CFR 1.27.

LOSS OF ENTITLEMENT TO SMALL ENTITY STATUS

☐ Patentee is no longer entitled to small entity status. See 37 CFR 1.27(g)

NOT Small Entity			Small Entity		
	Fee	Code		Fee	Code
○	3 ½ year	(1551)	○	3 ½ year	(2551)
○	7 ½ year	(1552)	○	7 ½ year	(2552)
○	11 ½ year	(1553)	○	11 ½ year	(2553)

SURCHARGE

The surcharge required by 37 CFR 1.20(i)(2) (Fee Code 1558) must be paid as a condition of accepting unintentionally delayed payment of the maintenance fee.

MAINTENANCE FEE (37 CFR 1.20(e)-(g))

The appropriate maintenance fee must be submitted with this petition.

STATEMENT

THE UNDERSIGNED CERTIFIES THAT THE DELAY IN PAYMENT OF THE MAINTENANCE FEE TO THIS PATENT WAS UNINTENTIONAL

PETITIONER(S) REQUEST THAT THE DELAYED PAYMENT OF THE MAINTENANCE FEE BE ACCEPTED AND THE PATENT REINSTATED

THIS PORTION MUST BE COMPLETED BY THE SIGNATORY OR SIGNATORIES

37 CFR 1.378(d) states: “Any petition under this section must be signed by an attorney or agent registered to practice before the Patent and Trademark Office, or by the patentee, the assignee, or other party in interest.”

I certify, in accordance with 37 CFR 1.4(d)(4) that I am

- ◉ An attorney or agent registered to practice before the Patent and Trademark Office
- ○ A sole patentee
- ○ A joint patentee; I certify that I am authorized to sign this submission on behalf of all the other patentees.
- ○ A joint patentee; all of whom are signing this e-petition
- ○ The assignee of record of the entire interest

Patent Practitioner			
A signature of the applicant or representative is required in accordance with 37 CFR 1.33 and 10.18. Please see 37 CFR 1.4(d) for the form of the signature			
Signature		Date (YYYY-MM-DD)	
Name		Registration Number	

This collection of information is required by 37 CFR 1.378(c). The information is required to obtain or retain a benefit by the public which is to file (and by the USPTO to process) an application. Confidentiality is governed by 35 U.S.C. 122 and 37 CFR 1.11 and 1.14. This collection is estimated to take 1 hour to complete, including gathering, preparing, and submitting the completed application form to the USPTO. Time will vary depending upon the individual case. Any comments on the amount of time you require to complete this form and/ or suggestions for reducing this burden, should be sent to the Chief Information Officer, U.S. Patent and Trademark Office, U.S. Department of Commerce, P.O. Box 1450, Alexandria, VA 22313-1450. DO NOT SEND FEES OR COMPLETED FORMS TO THIS ADDRESS. **This form can only be used when in conjunction with EFS-Web. If this form is mailed to the USPTO, it may cause delays in reinstating the patent.**

Privacy Act Statement

The Privacy Act of 1974 (P.L. 93-579) requires that you be given certain information in connection with your submission of the attached form related to a patent application or patent. Accordingly, pursuant to the requirements of the Act, please be advised that: (1) the general authority for the collection of this information is 35 U.S.C. 2(b)(2); (2) furnishing of the information solicited is voluntary; and (3) the principal purpose for which the information is used by the U.S. Patent and Trademark Office is to process and/or examine your submission related to a patent application or patent. If you do not furnish the requested information, the U.S. Patent and Trademark Office may not be able to process and/or examine your submission, which may result in termination of proceedings or abandonment of the application or expiration of the patent.

The information provided by you in this form will be subject to the following routine uses:

1. The information on this form will be treated confidentially to the extent allowed under the Freedom of Information Act (5 U.S.C. 552) and the Privacy Act (5 U.S.C. 552a). Records from this system of records may be disclosed to the Department of Justice to determine whether the Freedom of Information Act requires disclosure of these record s.

2. A record from this system of records may be disclosed, as a routine use, in the course of presenting evidence to a court, magistrate, or administrative tribunal, including disclosures to opposing counsel in the course of settlement negotiations.

3. A record in this system of records may be disclosed, as a routine use, to a Member of Congress submitting a request involving an individual, to whom the record pertains, when the individual has requested assistance from the Member with respect to the subject matter of the record.

4. A record in this system of records may be disclosed, as a routine use, to a contractor of the Agency having need for the information in order to perform a contract. Recipients of information shall be required to comply with the requirements of the Privacy Act of 1974, as amended, pursuant to 5 U.S.C. 552a(m).

5. A record related to an International Application filed under the Patent Cooperation Treaty in this system of records may be disclosed, as a routine use, to the International Bureau of the World Intellectual Property Organization, pursuant to the Patent Cooperation Treaty.

6. A record in this system of records may be disclosed, as a routine use, to another federal agency for purposes of National Security review (35 U.S.C. 181) and for review pursuant to the Atomic Energy Act (42 U.S.C. 218(c)).

7. A record from this system of records may be disclosed, as a routine use, to the Administrator, General Services, or his/her designee, during an inspection of records conducted by GSA as part of that agency's responsibility to recommend improvements in records management practices and programs, under authority of 44 U.S.C. 2904 and 2906. Such disclosure shall be made in accordance with the GSA regulations governing inspection of records for this purpose, and any other relevant (i.e., GSA or Commerce) directive. Such disclosure shall not be used to make determinations about individuals.

8. A record from this system of records may be disclosed, as a routine use, to the public after either publication of the application pursuant to 35 U.S.C. 122(b) or issuance of a patent pursuant to 35 U.S.C. 151. Further, a record may be disclosed, subject to the limitations of 37 CFR 1.14, as a routine use, to the public if the record was filed in an application which became abandoned or in which the proceedings were terminated and which application is referenced by either a published application, an application open to public inspections or an issued patent.

9. A record from this system of records may be disclosed, as a routine use, to a Federal, State, or local law enforcement agency, if the USPTO becomes aware of a violation or potential violation of law or regulation.

Under the Paperwork Reduction Act of 1995, no persons are required to respond to a collection of information unless it displays valid OMB control number.

PETITION TO ACCEPT UNINTENTIONALLY DELAYED PAYMENT OF MAINTENANCE FEE IN AN EXPIRED PATENT (37 CFR 1.378(c))

Patent Number	Issue Date (YYYY-MM-DD)	Application Number	Filing Date (YYYY-MM-DD)	Docket Number (if applicable)
6527438	2003-03-04	09884264	2001-06-19	017575.1010

CAUTION: Maintenance fee (and surcharge, if any) payment must correctly identify: (1) the patent number and (2) the application number of the actual U.S. application leading to issuance of that patent to ensure the fee(s) is/are associated with the correct patent. 37 CFR 1.366(c) and (d).

SMALL ENTITY
☒ Patentee claims, or has previously claimed, small entity status. See 37 CFR 1.27.

LOSS OF ENTITLEMENT TO SMALL ENTITY STATUS
☐ Patentee is no longer entitled to small entity status. See 37 CFR 1.27(g)

NOT Small Entity			Small Entity		
	Fee	Code		Fee	Code
○	3 ½ year	(1551)	◉	3 ½ year	(2551)
○	7 ½ year	(1552)	○	7 ½ year	(2552)
○	11 ½ year	(1553)	○	11 ½ year	(2553)

SURCHARGE
The surcharge required by 37 CFR 1.20(i)(2) (Fee Code 1558) must be paid as a condition of accepting unintentionally delayed payment of the maintenance fee.

MAINTENANCE FEE (37 CFR 1.20(e)-(g))
The appropriate maintenance fee must be submitted with this petition.

STATEMENT
THE UNDERSIGNED CERTIFIES THAT THE DELAY IN PAYMENT OF THE MAINTENANCE FEE TO THIS PATENT WAS UNINTENTIONAL

PETITIONER(S) REQUEST THAT THE DELAYED PAYMENT OF THE MAINTENANCE FEE BE ACCEPTED AND THE PATENT REINSTATED

THIS PORTION MUST BE COMPLETED BY THE SIGNATORY OR SIGNATORIES

37 CFR 1.378(d) states: "Any petition under this section must be signed by an attorney or agent registered to practice before the Patent and Trademark Office, or by the patentee, the assignee, or other party in interest."

I certify, in accordance with 37 CFR 1.4(d)(4) that I am

◉ An attorney or agent registered to practice before the Patent and Trademark Office

○ A sole patentee

○ A joint patentee; I certify that I am authorized to sign this submission on behalf of all the other patentees.

○ A joint patentee; all of whom are signing this e-petition

○ The assignee of record of the entire interest

Patent Practitioner			
A signature of the applicant or representative is required in accordance with 37 CFR 1.33 and 10.18. Please see 37 CFR 1.4(d) for the form of the signature			
Signature	/brad williams/	Date (YYYY-MM-DD)	2007-08-03
Name	Bradley P. Williams	Registration Number	40227

This collection of information is required by 37 CFR 1.378(c). The information is required to obtain or retain a benefit by the public which is to file (and by the USPTO to process) an application. Confidentiality is governed by 35 U.S.C. 122 and 37 CFR 1.11 and 1.14. This collection is estimated to take 1 hour to complete, including gathering, preparing, and submitting the completed application form to the USPTO. Time will vary depending upon the individual case. Any comments on the amount of time you require to complete this form and/ or suggestions for reducing this burden, should be sent to the Chief Information Officer, U.S. Patent and Trademark Office, U.S. Department of Commerce, P.O. Box 1450, Alexandria, VA 22313-1450. DO NOT SEND FEES OR COMPLETED FORMS TO THIS ADDRESS. **This form can only be used when in conjunction with EFS-Web. If this form is mailed to the USPTO, it may cause delays in reinstating the patent.**

Privacy Act Statement

The Privacy Act of 1974 (P.L. 93-579) requires that you be given certain information in connection with your submission of the attached form related to a patent application or patent. Accordingly, pursuant to the requirements of the Act, please be advised that: (1) the general authority for the collection of this information is 35 U.S.C. 2(b)(2); (2) furnishing of the information solicited is voluntary; and (3) the principal purpose for which the information is used by the U.S. Patent and Trademark Office is to process and/or examine your submission related to a patent application or patent. If you do not furnish the requested information, the U.S. Patent and Trademark Office may not be able to process and/or examine your submission, which may result in termination of proceedings or abandonment of the application or expiration of the patent.

The information provided by you in this form will be subject to the following routine uses:

1. The information on this form will be treated confidentially to the extent allowed under the Freedom of Information Act (5 U.S.C. 552) and the Privacy Act (5 U.S.C. 552a). Records from this system of records may be disclosed to the Department of Justice to determine whether the Freedom of Information Act requires disclosure of these record s.

2. A record from this system of records may be disclosed, as a routine use, in the course of presenting evidence to a court, magistrate, or administrative tribunal, including disclosures to opposing counsel in the course of settlement negotiations.

3. A record in this system of records may be disclosed, as a routine use, to a Member of Congress submitting a request involving an individual, to whom the record pertains, when the individual has requested assistance from the Member with respect to the subject matter of the record.

4. A record in this system of records may be disclosed, as a routine use, to a contractor of the Agency having need for the information in order to perform a contract. Recipients of information shall be required to comply with the requirements of the Privacy Act of 1974, as amended, pursuant to 5 U.S.C. 552a(m).

5. A record related to an International Application filed under the Patent Cooperation Treaty in this system of records may be disclosed, as a routine use, to the International Bureau of the World Intellectual Property Organization, pursuant to the Patent Cooperation Treaty.

6. A record in this system of records may be disclosed, as a routine use, to another federal agency for purposes of National Security review (35 U.S.C. 181) and for review pursuant to the Atomic Energy Act (42 U.S.C. 218(c)).

7. A record from this system of records may be disclosed, as a routine use, to the Administrator, General Services, or his/her designee, during an inspection of records conducted by GSA as part of that agency's responsibility to recommend improvements in records management practices and programs, under authority of 44 U.S.C. 2904 and 2906. Such disclosure shall be made in accordance with the GSA regulations governing inspection of records for this purpose, and any other relevant (i.e., GSA or Commerce) directive. Such disclosure shall not be used to make determinations about individuals.

8. A record from this system of records may be disclosed, as a routine use, to the public after either publication of the application pursuant to 35 U.S.C. 122(b) or issuance of a patent pursuant to 35 U.S.C. 151. Further, a record may be disclosed, subject to the limitations of 37 CFR 1.14, as a routine use, to the public if the record was filed in an application which became abandoned or in which the proceedings were terminated and which application is referenced by either a published application, an application open to public inspections or an issued patent.

9. A record from this system of records may be disclosed, as a routine use, to a Federal, State, or local law enforcement agency, if the USPTO becomes aware of a violation or potential violation of law or regulation.

UNITED STATES PATENT AND TRADEMARK OFFICE

Commissioner for Patents
United States Patent and Trademark Office
P.O. Box 1450
Alexandria, VA 22313-1450
www.uspto.gov

In re Patent No. 6527438
Issue Date: March 4,2003
Application No. 09884264
Filed: June 19,2001
Attorney Docket No. 0455FV.044077 (TAMU 1569)

:
:DECISION GRANTING PETITION
:UNDER 37 CFR 1.378(c)
:

This is a decision on the electronic petition, filed August 3,2007 ,under 37 CFR 1.378(c) to accept the unintentionally delayed payment of the 3.5 year maintenance fee for the above-identified patent.

The petition is GRANTED.

The maintenance fee is accepted, and the above-identified patent reinstated as of August 3,2007 . This decision also constitutes notice that the fee has been accepted. An electronic copy of the petition and this decision has been created as an entry in an Image File Wrapper. Nevertheless, petitioner should print and retain an independent copy

Telephone inquires related to this electronic decision should be directed to the Electronic Business Center at 1-866-217-9197.

UNITED STATES PATENT AND TRADEMARK OFFICE

UNITED STATES DEPARTMENT OF COMMERCE
United States Patent and Trademark Office
Address: COMMISSIONER FOR PATENTS
P.O. Box 1450
Alexandria, Virginia 22313-1450
www.uspto.gov

IBM CORPORATION
IPLAW SHCB/40-3
1701 NORTH STREET
ENDICOTT, NY 13760

Mail Date: 04/20/2010

Applicant	: Steven B. Adler	: DECISION ON REQUEST FOR
Patent Number	: 7603317	: RECALCULATION of PATENT
Issue Date	: 10/13/2009	: TERM ADJUSTMENT IN VIEW
Appliction No	: 09/884,296	: OF WYETH AND NOTICE OF INTENT TO
Filed	: 06/19/2001	: ISSUE CERTIFICATE OF CORRECTION
		:

The Request for Recalculation is **GRANTED** to the extent indicated.

The patent term adjustment has been determined to be **2032** days. The USPTO will *sua sponte* issue a certificate of correction reflecting the amount of PTA days determined by the recalculation.

Prior to the issuance of the certificate of correction, the USPTO will afford patentee an opportunity to be heard and request reconsideration. Accordingly, patentee has **one month or thirty (30) days**, whichever is longer, to file a request for reconsideration of this patent term adjustment calculation. See 35 U.S.C. 154(b)(3)(B)(ii) and 37 CFR 1.322(a)(4). No extensions of time will be granted under 37 CFR 1.136.

Patentee should use document code PET.OP if electronically filing a request for reconsideration of this patent term adjustment calculation. The patentee must also include the information required by 37 CFR 1.705(b)(2) and the fee required by 37 CFR 1.18(e). If patentee does not file a timely request for reconsideration of this patent term adjustment calculation including the information required by 37 CFR 1.705(b)(2) and the fee required by 37 CFR 1.18(e), the USPTO will issue a certificate of correction reflecting the PTA determination noted above.

Patentee should be aware that in order to preserve the right to review in the United States District Court for the District of Columbia of the USPTO patent term adjustment determination, patentee must ensure that he or she also take the steps required under 35 U.S.C. 154(b)(4)(A) in a timely manner. Nothing in the request for recalculation should be construed as providing an alternative time frame for commencing a civil action under 35 U.S.C. 154(b)(4)(A).

Any questions concerning this decision should be directed to the Office of Patent Legal Administration at 571-272-7702.

UNITED STATES PATENT AND TRADEMARK OFFICE

Commissioner for Patents
United States Patent and Trademark Office
P.O. Box 1450
Alexandria, VA 22313-1450
www.uspto.gov

WOODCOCK WASHBURN LLP
ONE LIBERTY PLACE – 46TH FLOOR
PHILADELPHIA, PA 19103

COPY MAILED

MAY 18 2006

OFFICE OF PETITIONS

In re Application of	:	
Sunil H. Contractor	:	
Application No. 09/884,316	:	DECISION ON PETITION
Filed: June 19, 2001	:	TO WITHDRAW
Attorney Docket No. BELL-0107/01006	:	FROM RECORD
	:	

This is a decision on the Request to Withdraw as attorney or agent of record under 37 C.F.R. § 1.36(b), filed August 9, 2005.

The request is **NOT APPROVED** as moot.

A review of the file record indicates that the power of attorney to Jonathan M. Waldman and others has been revoked by the assignee of the patent application. Accordingly, the request to withdraw under 37 C.F.R. § 1.36(b) is moot.

All future communications from the Office will continue to be directed to the below-listed address until otherwise notified by applicant.

Telephone inquires concerning this decision should be directed to Irvin Dingle at 571-272-3210.

Denise Pothier
Petitions Examiner
Office of Petitions

cc: Lee & Hayes, PLLC
421 W. Riverside Ave.
Suite 500
Spokane, WA 99201

UNITED STATES PATENT AND TRADEMARK OFFICE

COMMISSIONER FOR PATENTS
UNITED STATES PATENT AND TRADEMARK OFFICE
WASHINGTON, D.C. 20231
www.uspto.gov

Paper No. 4

WOODCOCK WASHBURN KURTZ
MACKIEWICZ & NORRIS
46TH FLOOR
ONE LIBERTY PLACE
PHILADELPHIA, PA 19103

COPY MAILED

FEB 2 8 2002

OFFICE OF PETITIONS

In re Application of :
Stanley T. Crooke et al :
Application No. 09/884,317 :
Filed: June 19, 2001 :
Attorney Docket No. IBIS-0369 :

NOTICE

This is a notice regarding your request for acceptance of a fee deficiency submission under 37 CFR 1.28. On September 1, 1998, the Court of Appeals for the Federal Circuit held that 37 CFR 1.28(c) is the sole provision governing the time for correction of the erroneous payment of the issue fee as a small entity. **See DH Technology v. Synergystex International, Inc. 154 F.3d 1333, 47 USPQ2d 1865 (Fed. Cir. Sept. 1, 1998).**

The Office no longer investigates or rejects original or reissue applications under 37 CFR 1.56. **1098 Off. Gaz. Pat. Office 502 (January 3, 1989).** Therefore, nothing in this Notice is intended to imply that an investigation was done.

Your fee deficiency submission under 37 CFR 1.28 is hereby **ACCEPTED.**

Inquiries related to this communication should be directed to the Office of Petitions Staff at (703) 305-9285.

This file is being forwarded to Technology Center AU 1634.

Wan Laymon
Petitions Examiner
Office of Petitions
Office of the Deputy Commissioner
for Patent Examination Policy

UNITED STATES PATENT AND TRADEMARK OFFICE

Commissioner for Patents
United States Patent and Trademark Office
P.O. Box 1450
Alexandria, VA 22313-1450
www.uspto.gov

IBM CORPORATION, T.J. WATSON RESEARCH CENTER
P.O. BOX 218
YORKTOWN HEIGHTS NY 10598

COPY MAILED
JUL 3 1 2006
OFFICE OF PETITIONS

In re Application of	:	
Tang	:	DECISION ON PETITION
Application No. 09/884,366	:	UNDER 37 CFR 1.137(b)
Filed: June 19, 2001	:	
Attorney Docket No. JP920000140US1	:	

This is a decision on the petition under 37 CFR 1.137(b), filed April 23, 2006, to revive the above-identified application.

On May 12, 2005, the Office mailed a Notice of Non-Compliant Amendment, which set a one-month extendable period to reply. On July 29, 2005, the Office mailed a "Failure to Acceptably Respond to Notice of Non-Compliant Amendment," which stated that the amendment submitted on June 20, 2005, failed to provide the corrective action required by the previous Notice of Non-Compliant Amendment mailed on May 12, 2005. The communication indicated that the period for reply continued to run from the mailing date of the Notice of Non-Compliant Amendment mailed on May 12, 2005.

Petitioner has met the requirements to revive the above-identified application pursuant to 37 CFR 1.137(b). Petitioner submitted the required reply in the form of an amendment, paid the petition fee, and made the proper statement of unintentional delay.

The petition is **granted.**

The matter is being referred to Technology Center Art Unit 2153.

Telephone inquiries should be directed to the undersigned at (571) 272-3211.

C. T. Donnell

Christina Tartera Donnell
Senior Petitions Attorney
Office of Petitions

#5

UNITED STATES PATENT AND TRADEMARK OFFICE

Commissioner for Patents
United States Patent and Trademark Office
Washington, D.C.

Paper No. 5

MOTOROLA INC
AUSTIN INTELLECTUAL PROPERTY
LAW SECTION
7700 WEST PARMER LANE MD: TX32/PL02
AUSTIN TX 78729

COPY MAILED

FEB 5 2002

OFFICE OF PETITIONS

In re Application of Shahar, et al. Application No. 09/884,377 Filed: June 18, 2001 Attorney Docket No. SC0355WI	DECISION ON PETITION

This is a decision on the petition filed September 4, 2001, which is properly considered as a petition under 37 C.F.R. §1.53(e)(2)[1] to accord the above-identified application a filing date of June 18, 2001.

Application papers in the above-identified application were filed on June 18, 2001. However, on August 17, 2001, the Initial Patent Examination Division (IPED) mailed a "Notice of Incomplete Nonprovisional Application," notifying applicant that the application papers had not been accorded a filing date because the application was deposited without drawings.[2] In addition, a new oath or declaration was required as the one submitted was unsigned.

In reply, applicants filed the instant petition. It is noted that no oath or declaration was received with the petition. On petition, applicants maintain that the application as filed on June 18, 2001, included one page of drawings as evidenced by the USPTO returning a postcard that accompanied the application that listed the items sent to the USPTO. In support thereof, petitioner submitted a copy of their postcard receipt identifying this application by serial number, itemizing "Formal Drawings (1 pg.)" among the enclosures, bearing a United States Patent and Trademark Office receipt date-stamp of June 18, 2001, and lacking any notation of non-receipt of any item listed.

A postcard receipt which itemizes and properly identifies the items which are being filed serves as *prima facie* evidence of receipt in the Office of all items listed thereon on the date stamped thereon by the Office. See MPEP 503. Applicant has shown that the application as filed on June 18, 2001 included one

---

[1] §1.53(e)(2) provides that "Any request for review of a notification pursuant to paragraph (e)(1) of this section, or a notification that the original application papers lack a portion of the specification or drawing(s), must be by way of a petition pursuant to this paragraph. ... In the absence of a timely (§1.181(f)) petition pursuant to this paragraph, the filing date of an application in which the applicant was notified of a filing error pursuant to paragraph (e)(1) of this section will be the date the filing error is corrected."

[2] See 35 U.S.C. 111(a)(4).

sheet of formal drawings, and thus, is entitled to a filing date of June 18, 2001.

In view thereof, the petition is **GRANTED**.

Given the basis for granting the petition, no petition fee is due and none has been charged.

In response to the filing of the petition, on October 16, 2001, IPED mailed a "Notice to File Missing Parts of Nonprovisional Application," informing applicant that a filing date of September 4, 2001 had been accorded but an executed oath or declaration (and surcharge for late filing) was still required.

To the extent that the Notice stated that the application is entitled to a filing date of September 4, 2001, the Notice was mailed in error and is hereby **VACATED**. However, the Notice was correct in stating that a signed oath or declaration is still required[3]. The two-month period for reply set in the "Notice to File Missing Parts of Nonprovisional Application" mailed October 16, 2001, continues to run from the mail date of that Notice, with extensions of time obtainable under §1.136(a). **Failure to file a timely and proper response will result in abandonment of the application.**

The application is being forwarded to the Office of Initial Patent Examination (OIPE) for:

- further processing with a filing date of June 18, 2001, using the application papers received in the Office on that date and the one sheet of drawings resubmitted on petition filed September 4, 2001;
- vacating the "Notice to File Missing Parts of Nonprovisional Application" mailed October 16, 2001, to the extent that it accords a filing date of September 4, 2001;
- to await a proper response, an executed oath or declaration, to the "Notice to File Missing Parts of Nonprovisional Application" mailed October 16, 2001.

Applicant will receive appropriate notifications regarding the fees owed, if any, and other information in due course from OIPE.

Telephone inquiries related to this decision should be directed to Petitions Attorney Nancy Johnson at 703-305-0309.

Beverly M. Flanagan
Supervisory Petitions Examiner
Office of Petitions
Office of the Deputy Commissioner
for Patent Examination Policy

---

[3] Pursuant to the general authorization to charge fees due in the application file, the Office could have charged the surcharge under §1.16(e). It is requested rather that applicant reply to the Notice with the required oath or declaration and an authorization to charge the surcharge.

UNITED STATES PATENT AND TRADEMARK OFFICE

Commissioner for Patents
United States Patent and Trademark Office
P.O. Box 1450
Alexandria, VA 22313-1450
www.uspto.gov

JONATHAN M. WALDMAN
WOODCOCK WASHBURN LLP
ONE LIBERTY PLACE - 46TH FLOOR
PHILADELPHIA PA 19103

COPY MAILED

APR 11 2006

OFFICE OF PETITIONS

In re Application of	:	
SUNIL CONTRACTOR	:	
Application No. 09/884,404	:	DECISION ON PETITION
Filed: June 19, 2001	:	TO WITHDRAW
Attorney Docket No. BELL-0106/01004	:	FROM RECORD

This is a decision on the Request to Withdraw as attorney or agent of record under 37 C.F.R. §1.36(b), filed August 9, 2005.

The request is **NOT APPROVED as moot.**

A review of the file record indicates that the power of attorney to all attorneys of record has been revoked by the assignee of the patent application on September 12, 2005. Accordingly, the request to withdraw under 37 C.F.R. § 1.136(b) is moot.

All future communications from the Office will be directed to the below-listed address until otherwise notified by applicant.

Telephone inquiries concerning this decision should be directed to Amelia Au at 571.272.7414.

Amelia Au
Petitions Examiner
Office of Petitions

cc: LEE & HAYES, PLLC
421 W. RIVERSIDE AVE.
SUITE 500
SPOKANE, WA 99201

UNITED STATES PATENT AND TRADEMARK OFFICE

COMMISSIONER FOR PATENTS
UNITED STATES PATENT AND TRADEMARK OFFICE
WASHINGTON, D.C. 20231
www.uspto.gov

Paper No. 13

Siemens Corporation
Intellectual Property Department
186 Wood Avenue South
Iselin, NJ 08830

COPY MAILED

APR 2 1 2003

OFFICE OF PETITIONS

In re Application of
Uwe Sydon, et. al.
Application No. 09/884,415
Filed: June 18, 2001
Attorney Docket No. 99 P 7358 US 01

ON PETITION

This is a decision on the petition under 37 CFR 1.137(b), filed April 11, 2003, to revive the above-identified application.

The above-identified application became abandoned for failure to reply within the meaning of 37 CFR 1.113 in a timely manner to the final Office action mailed June 4, 2002, which set a shortened statutory period for reply of three (3) months. No extensions of time under the provisions of 37 CFR 1.136(a) were obtained. Accordingly, the above-identified application became abandoned after midnight September 4, 2002.

The petition is **GRANTED**.

The file does not indicate a change of address has been submitted, although the address given on the petition differs from the address of record. If appropriate, a change of address should be filed in accordance with MPEP 601.03. A courtesy copy of this decision is being mailed to the address given on the petition; however, the Office will mail all future correspondence solely to the address of record.

The application is being forwarded to Technology Center 2600 for processing the Request for Continued Examination under 37 CFR 1.114 filed with the instant petition.

Telephone inquiries concerning this decision should be directed to Andrea Smith at (703) 308-6711.

Andrea Smith
Petitions Examiner
Office of Petitions
Office of the Deputy Commissioner
for Patent Examination Policy

CC: Elsa Keller, IP Department
Siemens Corporation
170 Wood Avenue South
Iselin, NJ 08830

UNITED STATES PATENT AND TRADEMARK OFFICE

Commissioner for Patents
United States Patent and Trademark Office
P.O. Box 1450
Alexandria, VA 22313-1450
www.uspto.gov

BLAKELY SOKOLOFF TAYLOR & ZAFMAN
12400 Wilshire Boulevard
Seventh Floor
Los Angeles, CA 90025-1030

MAIL

MAY 2 3 2006

DIRECTOR OFFICE
TECHNOLOGY CENTER 2600

In re Application of :
ZHOU, GUOJUN :
Application No. 09/884,423 : DECISION ON PETITION
Filed: June 20, 2001 :
For: **PSYCHO-PHYSICAL STATE** :
SENSITIVE VOICE DIALOGUE SYSTEM :

This is a decision on the petition filed February 17, 2006 to reset the period for response. The petition is being treated as a petition to withdraw holding of abandonment pursuant to 37 CFR § 1.181.

The application became abandoned for failure to timely file a response to the final Office action mailed July 27, 2005. A Notice of Abandonment has not been mailed.

Petitioner asserts that he did not receive the final Office action mailed July 27, 2005. It was discovered that the Office action was mailed to an incorrect address. A review of the record indicates that, in fact, the final Office action was mailed to an incorrect address.

Accordingly, the application is not abandoned in fact, and the holding of abandonment is withdrawn.

The petition is **GRANTED**.

In view of the time lapse between the original mailing of the Office action of July 27, 2005, and the date of this decision, the application file will be forwarded to the examiner of record for updating the search and the Office action as appropriate.

From there, the file will be forwarded to the Technology Center's technical support staff for mailing of the updated Office action and setting a new shortened statutory period of three (3) months for the applicant to respond. The address of record has been corrected to that shown above.

Kenneth A. Wieder
Special Program Examiner
Technology Center 2600
Communications

UNITED STATES PATENT AND TRADEMARK OFFICE

Commissioner for Patents
United States Patent and Trademark Office
P.O. Box 1450
Alexandria, VA 22313-1450
www.uspto.gov

PATTERSON, THUENTE, SKAAR & CHRISTENSEN, P.A.
4800 IDS CENTER
80 SOUTH 8TH STREET
MINNEAPOLIS, MN 55402-2100

COPY MAILED

JUN 0 9 2005

OFFICE OF PETITIONS

In re Application of	:	
Halbmaier	:	
Application No. 09/884,450	:	DECISION ON APPLICATION
Filed: June 18, 2001	:	FOR
Atty Docket No. 2267.421US02	:	PATENT TERM ADJUSTMENT
	:	

This is a decision on the "APPLICATION FOR PATENT TERM ADJUSTMENT INCLUDING REQUEST FOR RECONSIDERATION OF PATENT TERM ADJUSTMENT INDICATED IN NOTICE OF ALLOWANCE (37 CFR § 1.705)," filed July 2, 2004. Applicant requests correction of the patent term adjustment from ninety-five (95) to one hundred sixty-seven (167) days based in part on the Office taking in excess of three years to issue the patent.

To the extent that the instant application for patent term adjustment requests reconsideration of the patent term adjustment as it relates to the Office's failure to issue the patent within 3 years of the filing date, a decision is being **held in abeyance** until after the actual patent date. Knowledge of the actual date the patent issues is required to calculate the amount, if any, of additional patent term patentee is entitled to for Office failure to issue the patent within 3 years. See § 1.703(b).

Patentee is given **TWO (2) MONTHS** from the issue date of the patent to file a written request for reconsideration of the patent term adjustment for Office failure to issue the patent within 3 years. A copy of this decision should accompany the request. Patentee may seek such consideration without payment

of an additional fee. However, as to all other bases for seeking reconsideration of the patent term adjustment indicated in the patent, all requirements of § 1.705(d) must be met. Requests for reconsideration on other bases must be timely filed and must include payment of the required fee.

As to the application for patent term adjustment, it is **GRANTED** to the extent indicated herein.

The Office has updated the PAIR screen to reflect that the correct Patent Term Adjustment (PTA) determination at the time of the mailing of the Notice of Allowance is one hundred fifty-one (151) days. A copy of the updated PAIR screen, showing the correct determination, is enclosed.

On March 31, 2004, the Office mailed the Determination of Patent Term Adjustment under 35 U.S.C. 154(b) in the above-identified application. The Notice stated that the patent term adjustment to date is 95 days. Applicant timely filed the instant application for patent term adjustment, along with payment of the Issue Fee. Applicant disputes both the reduction of 61 days for applicant delay in responding to the Notice to File Missing Parts of Application mailed August 14, 2001; and the reduction of 66 days for applicant delay in responding to the final rejection mailed September 16, 2003. Applicant states that their response to the Notice to File Missing Parts was received in the Office on January 2, 2002, and thus, the period of reduction associated therewith should be 49 days. Applicant states that the delay pursuant to § 1.704(b) should be 6 days for taking in excess of three months to respond to the advisory action mailed January 23, 2004, not 66 days for delay in responding to the final rejection. Applicant states a response to the final rejection was filed within the three-month period.

Re Delay in Responding to Notice to File Missing Parts

As to the response to the Notice to File Missing Parts of Application, applicant's attention is directed to the OG Notice dated January 15, 2002 (1254 OG 92), in which, the Office advised applicants that:

> If a reply to an Office action or notice was mailed on or after October 13, 2001 and no later than December 1, 2001 (as shown on a certificate of mailing under 37 CFR 1.8), and the applicant is otherwise entitled to patent term

> adjustment (or additional patent term adjustment) but for the fact that there was a reduction of such patent term adjustment under 35 U.S.C. 154(b)(2)(C)(ii) and 37 CFR 1.704(b) due to the receipt of such reply by the Office more than three business days after the date indicated on the certificate of mailing, the Office will consider the USPS mail situation discussed in this notice to constitute a sufficient showing that, in spite of all due care, the applicant was unable to reply to the Office action or notice within three months of the date of mailing of the Office action or notice. In this situation, the Office will, subject to the conditions set forth below, reinstate a period equal to the period beginning on the date that is four business days after the date indicated on the certificate of mailing on the reply and the date of receipt (37 CFR 1.6) of the reply in the Office up to a maximum of three months.

The relevant reply to the Notice mailed August 14, 2001 was mailed on November 14, 2001, as shown by the certificate of mailing under § 1.8 thereon. However, the patent term adjustment was reduced by 61 days because the reply was not received in the Office until January 2, 2002. In addition, the Office entered the date of January 14, 2002 as the date the application was considered complete in response to the Notice and used that later date in calculating the 61 day reduction of patent term adjustment.

Thus, it is concluded that the Notice dated January 15, 2002 is applicable to this situation; in spite of all due care, the applicants were unable to reply to the Notice to File Missing Parts within three months of the date of mailing of the notice. It is further concluded that applicants have met the other conditions set forth in the Notice for reinstatement of patent term. In this instance, the period of reinstatement begins on November 20, 2001, the day that is four business days after November 14, 2001, and ends on January 2, 2002, the date of receipt of the reply. Accordingly, applicant is entitled to reinstatement of the period of reduction of 44 days. With the reinstatement, the patent term adjustment would be increased by 44 days (95 + 44) to 139 days.

Furthermore, given that in calculating the reduction, the Office should have used the date of January 2, 2002, rather than January 14, 2002, the reduction must be further corrected. A

review of the application file reveals that the response is present in the application file with a date of receipt of January 2, 2002. As the application was complete on January 2, 2002, the patent term adjustment should not have been reduced by 12 days for the period from January 3, 2002 to January 14, 2002. With this correction, the patent term adjustment would not have been reduced by 12 days, and thus, should be 151 days (229 - 122 (+ 44)).

As this reduction is not the sole basis for the application for patent term adjustment, the fee set forth in 37 CFR 1.18(e) will not be waived.

Re Delay in Responding to Final Rejection

The reduction of 66 days for delay in responding to the final rejection mailed September 16, 2003 has been reconsidered, and found to be correct. As the amendment filed December 22, 2003, was not in compliance with § 1.113(c), the period for reply to the final rejection mailed September 23, 2003, continued to run. Such an after final amendment that does not place the application in condition for allowance is not a reply within the meaning of § 1.704(b). See Advisory Action mailed January 23, 2004.

On the other hand, the amendment filed February 20, 2004, led to the issuance of a non-final rejection. In view thereof, the reply is considered a reply within the meaning of § 1.704(b). Accordingly, pursuant to § 1.704(b), the patent term adjustment was reduced by 66 days for applicant delay from December 17, 2003 to February 20, 2004.

In view thereof, the patent term adjustment at the time of the mailing of the notice of allowance is one hundred fifty-one (151) days.

Petitioner is reminded that if an application is entitled to an adjustment under 35 U.S.C. 154(b)(1)(B), the entire period during which the application (except for periods excluded under 35 U.S.C. 154(b)(1)(B)(i)-(iii)), and not just the period beginning three years after the actual filing date of the application, is the period of delay under 35 U.S.C. 154(b)(1)(B) in determining whether periods of delay overlap under 35 U.S.C. 154(b)(2)(A). Thus, any days of delay for Office issuance of the patent more than 3 years after the filing date of the

application, which overlap, with the days of patent term adjustment accorded prior to the issuance of the patent will not result in any additional patent term adjustment. See 35 U.S.C. 154(b)(1)(B), 35 U.S.C. 154(b)(2)(A), and 37 CFR § 1.703(f). See also *Revision of Patent Term Extension and Patent Term Adjustment Provisions; Final Rule*, 69 Fed. Reg. 21704 (April 22, 2004).

The Office acknowledges submission of the $200.00 fee set forth in 37 CFR 1.18(e). No additional fees are required.

The application file is being forwarded to the Office of Patent Publication for issuance of the patent.

Telephone inquiries specific to this matter should be directed to Nancy Johnson, Senior Petitions Attorney, at (571) 272-3219.

Karin Ferriter
Senior Legal Advisor
Office of Patent Legal Administration
Office of Deputy Commissioner
for Patent Examination Policy

Enclosure: Copy of REVISED PAIR screen

UNITED STATES PATENT AND TRADEMARK OFFICE

Commissioner for Patents
United States Patent and Trademark Office
P.O. Box 1450
Alexandria, VA 22313-1450
www.uspto.gov

GREENBERG - TRAURIG
1750 TYSONS BOULEVARD
12TH FLOOR
MCLEAN, VA 22102

COPY MAILED

MAY 0 5 2006

OFFICE OF PETITIONS

In re Application of	:	
Dov Ingman et al	:	
Application No. 09/884,463	:	DECISION ON PETITION
Filed: June 20, 2001	:	TO WITHDRAW
Attorney Docket No. 50761.010100	:	FROM RECORD
	:	

This is a decision on the Request to Withdraw as attorney or agent of record under 37 C.F.R. § 1.36(b), filed August 11, 2005.

The petition is **NOT APPROVED** as moot.

A review of the file record indicates that the previously appointed power of attorney has been revoked by the assignee. Accordingly, the request to withdraw under 37 C.F.R. § 1.36(b) is moot.

All future communications from the Office will continue to be directed to the below-listed address until otherwise notified by applicants.

This application is being referred to Technology Center AU 2874.

Telephone inquires concerning this decision should be directed to Wan Laymon at 571-272-3220.

David Bucci
Petitions Examiner
Office of Petitions

cc: BARDMESSER LAW GROUP
910 17TH STREET, N.W.
SUITE 800
WASHINGTON, DC 20006

UNITED STATES PATENT AND TRADEMARK OFFICE

UNITED STATES DEPARTMENT OF COMMERCE
United States Patent and Trademark Office
Address: COMMISSIONER FOR PATENTS
P.O. Box 1450
Alexandria, Virginia 22313-1450
www.uspto.gov

HUNTON & WILLIAMS LLP
INTELLECTUAL PROPERTY DEPARTMENT
1900 K STREET, N.W.
SUITE 1200
WASHINGTON, DC 20006-1109

Mail Date: 04/21/2010

Applicant	: Jeffrey A. Bedell	: DECISION ON REQUEST FOR
Patent Number	: 7617201	: RECALCULATION of PATENT
Issue Date	: 11/10/2009	: TERM ADJUSTMENT IN VIEW
Appliction No	: 09/884,467	: OF WYETH AND NOTICE OF INTENT TO
Filed	: 06/20/2001	: ISSUE CERTIFICATE OF CORRECTION
		:

The Request for Recalculation is **GRANTED** to the extent indicated.

The patent term adjustment has been determined to be **1263** days. The USPTO will *sua sponte* issue a certificate of correction reflecting the amount of PTA days determined by the recalculation.

Prior to the issuance of the certificate of correction, the USPTO will afford patentee an opportunity to be heard and request reconsideration. Accordingly, patentee has **one month or thirty (30) days**, whichever is longer, to file a request for reconsideration of this patent term adjustment calculation. See 35 U.S.C. 154(b)(3)(B)(ii) and 37 CFR 1.322(a)(4). No extensions of time will be granted under 37 CFR 1.136.

Patentee should use document code PET.OP if electronically filing a request for reconsideration of this patent term adjustment calculation. The patentee must also include the information required by 37 CFR 1.705(b)(2) and the fee required by 37 CFR 1.18(e). If patentee does not file a timely request for reconsideration of this patent term adjustment calculation including the information required by 37 CFR 1.705(b)(2) and the fee required by 37 CFR 1.18(e), the USPTO will issue a certificate of correction reflecting the PTA determination noted above.

Patentee should be aware that in order to preserve the right to review in the United States District Court for the District of Columbia of the USPTO patent term adjustment determination, patentee must ensure that he or she also take the steps required under 35 U.S.C. 154(b)(4)(A) in a timely manner. Nothing in the request for recalculation should be construed as providing an alternative time frame for commencing a civil action under 35 U.S.C. 154(b)(4)(A).

Any questions concerning this decision should be directed to the Office of Patent Legal Administration at 571-272-7702.

UNITED STATES PATENT AND TRADEMARK OFFICE

COMMISSIONER FOR PATENTS
UNITED STATES PATENT AND TRADEMARK OFFICE
P.O. BOX 1450
ALEXANDRIA, VA 22313-1450
www.uspto.gov

Paper No. 19
MAIL

APR 21 2004

DIRECTOR OFFICE
TECHNOLOGY CENTER 2600

MYERS BIGEL SIBLEY & SAJOVEC
PO BOX 37428
RALEIGH NC 27627

In re Application of)
Jin Ho Park)
Application No. 09/884,487)
Filed: June 18, 2001)
For: MULTIPLE OUTPUT DC/DC VOLTAGE)
CONVERTERS

DECISION ON REQUEST TO WITHDRAW FROM RECORD

This is a decision on the requests to withdraw as attorney/agent of record filed on February 23, 2004.

A grantable request to withdraw as attorney/agent of record must do the following:
(1) indicate the present mailing address of the attorney(s)/agent(s) who seek(s) to withdraw, and
(2) be signed by each attorney/agent seeking to withdraw or clearly be signed on their behalf, and
(3) be *approved* at least thirty (30) days prior to the maximum extendable period for response to any outstanding Office Action, and
(4) indicate the address to which future correspondence should be mailed.

The Request to Withdraw as Attorney is **Denied**.

Attorney requesting withdrawal is not of record.

Further communications will continue to be directed to the address listed above until such a time as applicant properly notifies the Patent and Trademark Office of a change of address.

The application is being returned to the examiner of record to consider the Supplemental Appeal Brief filed July 17, 2003.

Dwayne Bost
Special Program Examiner
Technology Center 2600
Communications
(703) 305-4778

CC: Hae-Chan Park
McGuireWoods LLP
1750 Tysons Boulevard
Suite 1800
McLean, VA 22102-4215

UNITED STATES PATENT AND TRADEMARK OFFICE

COMMISSIONER FOR PATENTS
UNITED STATES PATENT AND TRADEMARK OFFICE
P.O. BOX 1450
ALEXANDRIA, VA 22313-1450
www.uspto.gov

MAIL

Paper No. 21

JUL - 2 2004

DIRECTOR OFFICE
TECHNOLOGY CENTER 2600

MYERS BIGEL SIBLEY & SAJOVEC
P.O. BOX 37428
RALEIGH, NC 27627

In re Application of
Jin-Ho Park
Application No. 09/884,487
Filed: June 18, 2001
For: A MULTIPLE OUTPUT DC/DC VOLTAGE CONVERTER AND A LIGUID CRYSTAL DISPLAY USING THEREOF

DECISION ON REQUEST TO WITHDRAW FROM RECORD

This is a decision on the Request for Withdrawal as Attorney or Agent and Change of Address filed on May 10, 2004.

A grantable request to withdraw as attorney/agent of record must:
(1) indicate the present mailing address of the attorney(s)/agent(s) who seek(s) to withdraw, and
(2) be signed by each attorney/agent seeking to withdraw or clearly be signed on their behalf, and
(3) be *approved* at least thirty (30) days prior to the maximum extendable period for response to any outstanding Office Action, and
(4) indicate the address to which future correspondence should be mailed.

Petitioner has met all of the above. Accordingly, the request is **GRANTED**.

All Attorneys/Agent associated with Customer Number 20792 have been withdrawn.

All future communications from the Office will be directed to the below-listed address until otherwise notified by applicant. Applicant is reminded of the obligation to promptly notify the Patent and Trademark Office of any change in correspondence address to ensure receipt of all communications from the Office.

Kenneth A. Wieder
Special Program Examiner
Technology Center 2600
Communications
(703) 305-4710

cc: Hae-Chan Park
McGuire Woods LLP
1750 Tysons Boulevard
Suite 1800
McLean, VA 22102-4215

UNITED STATES PATENT AND TRADEMARK OFFICE

COMMISSIONER FOR PATENTS
UNITED STATES PATENT AND TRADEMARK OFFICE
P.O. BOX 1450
ALEXANDRIA, VA 22313-1450
www.uspto.gov

MAILED

APR 12 2006

Technology Center 2100

Duke W. Yee
Carstens, Yee & Cahoon, LLP
P.O. Box 802334
Dallas, TX 75380

In re Application of: Kaply, et al. Application No. 09/884,493 Attorney Docket No. AUS920010544US1 Filed: June 18, 2001 For: METHOD AND APPARATUS FOR REMOVING CONFINDENTIAL INFORMATION FROM A HISTORY	DECISION ON PETITION TO WITHDRAW HOLDING OF ABANDONMENT UNDER 37 CFR §1.181

This is a decision on the petition to withdraw the holding of abandonment, under 37 CFR §1.181, filed on August 12, 2005, for failure to receive the final Office action mailed October 6, 2004.

The final Office action, mailed October 6, 2004, set a three-month shortened statutory period for response. However, on October 19, 2004, the final Office action of October 6, 2004 was returned to the Office undelivered. This acts as *prima facia* evidence that Applicant did not receive the Office action. Accordingly, the Office remailed the final Office action to Applicant on August 18, 2005, restarting the shortened statutory period for response with the remailing.

In response to the August 18, 2005 (remailed) final Office action, Applicant filed a supplemental IDS on August 22, 2005, a Notice of Appeal on September 8, 2005 and an Appeal Brief on November 8, 2005.

Since it is evident from the record as a whole that Applicant has received the latest Office action and responded thereto, the petition is **DISMISSED as MOOT.**

As a courtesy, Applicant should be made aware of a discrepancy between the correspondence address of record i.e. "P.O. Box 802334" found in the original declaration and the address provided with the instant petition i.e. "P.O. Box 802333".

The application will be forwarded to the examiner for prompt action on the merits, i.e. consideration of the Appeal Brief filed November 8, 2005.

Brian L. Johnson
Special Programs Examiner
Technology Center 2100
Computer Architecture, Software, and Information Security
571-272-3595

UNITED STATES PATENT AND TRADEMARK OFFICE

COMMISSIONER FOR PATENTS
UNITED STATES PATENT AND TRADEMARK OFFICE
WASHINGTON, D.C. 20231
www.uspto.gov

Paper No. 7

7 | Pet to w/D attorney granted 4/12/02 JMercado

Davin M. Stockwell
Lyon & Lyon
633 W. 5th St., Suite 4700
Los Angeles, CA 90071

APR 12 2002

In re Application of:
Cruz
Application No. 09/884,522
Filed: June 18, 2001

DECISION ON REQUEST TO WITHDRAW FROM RECORD

This is a decision on the request to withdraw as attorney of record under 37 C.F.R. § 1.36, filed November 20, 2001.

A grantable request to withdraw as attorney of record must be signed by every attorney seeking to withdraw or contain a clear indication that one attorney is signing on behalf of others. A request to withdraw will not be approved unless at least thirty (30) days would remain between the date of approval and the later of the expiration date of a time to file a response or the expiration date of the maximum time period which can be extended under 37 C.F.R. § 1.136(a).

The request meets all the above stated requirements. The request was signed by Davin M. Stockwell on behalf of himself and the other attorneys of record. There is no outstanding Office action at this time.

The request is **APPROVED**.

The are no attorneys of record at this time.

All future communications from the Office will be directed to the address indicated below until otherwise notified by applicant.

Inquiries related to this decision should be directed to Michael L. Gellner at 703-308-1721.

MAILED

APR 12 2002

TECHNOLOGY CENTER 2800
SPECIAL PROGRAM CENTER

Michael L. Gellner, Special Programs Examiner
Technology Center 2800
Semiconductors, Electrical and Optical
Systems and Components

cc: Richard Wade
Vertical Computer Systems, Inc.
6336 Wilshire Blvd.
Los Angeles, CA 90048

UNITED STATES PATENT AND TRADEMARK OFFICE

COMMISSIONER FOR PATENTS
UNITED STATES PATENT AND TRADEMARK OFFICE
WASHINGTON, D.C. 20231
www.uspto.gov

Paper No. 5

MORGAN & FINNEGAN, LLP
345 PARK AVENUE
NEW YORK, NY 10154

COPY MAILED

JAN 18 2002

OFFICE OF PETITIONS

In re Application of	:	
David Meeker et al	:	DECISION GRANTING
Application No. 09/884,526	:	PETITION
Filed: June 19, 2001	:	
Attorney Docket No. 4274-4000	:	

This is a decision on the paper styled "Petition Requesting Correction of Filing Receipt" filed December 13, 2001, which is properly treated as a petition under 37 CFR 1.10(d), requesting that the above-identified application be accorded a filing date of June 19, 2001, rather than the presently accorded filing date of June 20, 2001.

Applicants request the earlier filing date on the basis that the application was purportedly deposited with the U.S. Postal Service (USPS) as Express Mail on June 19, 2001, pursuant to the requirements of 37 CFR 1.10. In support applicants submit, inter alia, a copy of Express Mail receipt number EL762623628US, a U.S. Postal Service (USPS) sales receipt for the Express Mail package in question, and a copy of the original transmittal letter referring to the same Express Mail number.

It is noted that the "date-in" on the copy of the Express Mail receipt reflects a handwritten "6". While the receipt also include a "New York, NY USPS" receipt stamp, the date is illegible as it reads "JU 19, 2001." However, the USPS sales receipt clearly shows that Express Mail label No. EL762623628US was accepted for deposit on June 19, 2001.

In view of the above, the evidence is convincing that the application was deposited as "Express Mail" with the US Postal Service on June 19, 2001.

The petition is granted.

No petition fee is required and none has been charged.

The application is being returned to Initial Patent Examination Division for correction of the filing date to June 19, 2001.

Telephone inquires specific to this matter should be directed to Wan Laymon at (703) 306-5685.

Sherry Brinkley

Sherry Brinkley
Petitions Examiner
Office of Petitions
Office of the Deputy Commissioner
for Patent Examination Policy

UNITED STATES PATENT AND TRADEMARK OFFICE

UNITED STATES DEPARTMENT OF COMMERCE
United States Patent and Trademark Office
Address: COMMISSIONER FOR PATENTS
P.O. Box 1450
Alexandria, Virginia 22313-1450
www.uspto.gov

APPLICATION NO.	FILING DATE	FIRST NAMED INVENTOR	ATTORNEY DOCKET NO.	CONFIRMATION NO.
09/884,528	06/19/2001	Oleg Wasynczuk	16410-108	2652

7590 01/12/2009
Matthew R. Schantz
Woodard, Emhardt, Naughton, Moriarty and McNett
Bank One Center/Tower
111 Monument Circle, Suite 3700
Indianapolis, IN 46204-5137

EXAMINER
GUILL, RUSSELL L

ART UNIT	PAPER NUMBER
2123	

MAIL DATE	DELIVERY MODE
01/12/2009	PAPER

Please find below and/or attached an Office communication concerning this application or proceeding.

The time period for reply, if any, is set in the attached communication.

UNITED STATES PATENT AND TRADEMARK OFFICE

Commissioner for Patents
United States Patent and Trademark Office
P.O. Box 1450
Alexandria, VA 22313-1450
www.uspto.gov

Matthew R. Schantz
Woodard, Emhardt, Naughton, Moriarty and McNett
Bank One Center/Tower
111 Monument Circle, Suite 3700
Indianapolis IN 46204-5137

In re Application of: Wasynczuk, Oleg et al
Patent No. :TBA
Application No.: 09/884528
Filed: June 20, 2001

: RESPONSE TO REQUEST TO
; CORRECT INVENTORSHIP
: UNDER 37 C.F.R. § 1.48 (b)

For: **DISTRIBUTED SIMULATION**

Applicants' request to correct the inventorship of the above-referenced application filed on November 10, 2008, under 37 C.F.R. § 1.48(b) has been received. This petition is **GRANTED**.

A proper petition under this code section requires the following items. 1) A request, signed by a party set forth in §1.33(b), to correct the inventorship that identifies the named inventor or inventors being deleted and acknowledges that the inventor's invention is no longer being claimed in the nonprovisional application; and 2) The processing fee set forth in § 1.17(i).

Applicant's have complied with each requirement.

Paul Rodriguez
Supervisory Patent Examiner
Art Unit 2123
(571)272-3753

UNITED STATES PATENT AND TRADEMARK OFFICE

Commissioner for Patents
United States Patent and Trademark Office
P.O. Box 1450
Alexandria, VA 22313-1450
www.uspto.gov

MANATT PHELPS AND PHILLIPS
ROBERT D. BECKER
1001 PAGE MILL ROAD, BUILDING 2
PALO ALTO, CA 94304

COPY MAILED

JUL 06 2007

OFFICE OF PETITIONS

In re Application of	:	
Brian McConnell, et al.	:	
Application No. 09/884,531	:	DECISION ON PETITION
Filed: June 19, 2001	:	TO WITHDRAW
Attorney Docket No. 310/1-25587-039	:	FROM RECORD
	:	

This is a decision on the Request to Withdraw as attorney or agent of record under 37 C.F.R. § 1.36(b) filed January 25, 2007.

The request is **DISMISSED** as moot.

A review of the file record indicates that the power of attorney to Manatt, Phelps and Phillips has been revoked by the assignee of the patent application on February 13, 2007. Accordingly, the request to withdraw under 37 C.F.R. § 1.36(b) is moot.

All future communications from the Office will continue to be directed to the below-listed address until otherwise notified by applicant.

Telephone inquires concerning this decision should be directed to undersigned at 571-272-1642.

April M. Wise
Petitions Examiner
Office of Petitions

cc: OBLON, SPIVAK, MCCLELLAND, MAIER
& NEUSTADT, P.C.
1940 DUKE STREET
ALEXANDRIA, VA 22314

UNITED STATES PATENT AND TRADEMARK OFFICE

COMMISSIONER FOR PATENTS
UNITED STATES PATENT AND TRADEMARK OFFICE
P.O. BOX 1450
ALEXANDRIA, VA 22313-1450
www.uspto.gov

Paper No. 15

MILLIKEN & COMPANY
PO Box 1926
Spartanburg, SC 29304

COPY MAILED

OCT 21 2003

OFFICE OF PETITIONS

In re Application of :
John A. Sollars, Jr. :
Application No. 09/884,541 : ON PETITION
Filed: June 19, 2001 :
Attorney Docket No. 2056A :

This is a decision on the request for reconsideration under 37 CFR 1.137(b) filed October 6, 2003, to revive the above-identified application.

The petition is Granted.

The above-identified application became abandoned for failure to reply within the meaning of 37 CFR 1.137(b) in a timely manner in reply to the final Office action mailed April 4, 2002, which set a shortened statutory period for reply of three months from the mail date of the Notice. A three-month extension of time under the provisions of 37 CFR 1.136 was obtained on October 4, 2002. Accordingly, the application became abandoned on October 5, 2002.

The application file is being forwarded to Technology Center AU 3616 for processing the Request for Continued Examination under 37 CFR 1.114 filed with the instant petition.

Telephone inquiries concerning this decision should be directed to Latrice Bond at (703) 308-6911.

Latrice Bond

Latrice Bond
Paralegal Specialist
Office of Petitions
Office of the Deputy Commissioner
for Patent Examination Policy

UNITED STATES PATENT AND TRADEMARK OFFICE

Commissioner for Patents
United States Patent and Trademark Office
P.O. Box 1450
Alexandria, VA 22313-1450
www.uspto.gov
DIW Jan-06

DUKE W. YEE
CARSTENS, YEE & CAHOON, LLP
P.O. BOX 802334
DALLAS TX 75380

COPY MAILED

JAN 24 2006

OFFICE OF PETITIONS

In re Application of	:	
Boies et al.	:	DECISION ON PETITION TO
Application No. 09/884,580	:	WITHDRAW HOLDING OF
Filed: 19 June, 2001	:	ABANDONMENT
Atty Docket No. YOR920000496US1	:	

This is a decision on the petition filed on 12 August, 2005, to withdraw the holding of abandonment in the above-identified application.

The petition is **DISMISSED**.

The application was held abandoned for failure to timely respond to the non-final Office action mailed on 9 December, 2004. Notice of Abandonment was mailed on 29 June, 2005.

Petitioners again assert that an amendment was timely filed. In support, petitioner has supplied a copy of an amendment, the first page of which contains a Certificate of Facsimile Transmission dated 9 March, 2005.

Any petition to withdraw the holding of abandonment based on a Certificate of Transmission by facsimile must include the following requirements:

(1) A copy of the original response bearing a signed Certificate of Transmission which includes the date of signing; and

(2) A statement under 37 CFR 1.8(b)(3) attesting to the personal knowledge of transmitting the ***original*** response on the date indicated on the Certificate of Transmission (*see* 37 CFR 1.8 and MPEP 512).

The petition lacks item (2) above. Petitioners should supply a statement by the individual who signed the Certificate of Transmission.

Any request for reconsideration must be filed within **TWO MONTHS** of the date of this decision. **This period may not be extended.**[1]

The address in the petition is different than the correspondence address. A courtesy copy of this decision is being forwarded to the address in the petition. All future correspondence will be mailed solely to the address of record.

Further correspondence with respect to this matter should be addressed as follows:

By mail: Mail Stop Petition
Commissioner for Patents
P.O. Box 1450
Alexandria, VA 22313-1450

By FAX: (571) 273-8300
Attn: Office of Petitions

By hand: Customer Service Window
Mail Stop Petition
Randolph Building
401 Dulany Street
Alexandria, VA 22314

Telephone inquiries concerning this matter may be directed to the undersigned at (571)272-3231.

Douglas I. Wood
Senior Petitions Attorney
Office of Petitions

cc: Duke W. Yee
Yee & Associates, P.C.
PO Box 802333
Dallas TX 75380

---

[1] 37 CFR 1.181(f).

UNITED STATES PATENT AND TRADEMARK OFFICE

Commissioner for Patents
United States Patent and Trademark Office
P.O. Box 1450
Alexandria, VA 22313-1450
www.uspto.gov
DIW Mar-06

DUKE W. YEE
CARSTENS, YEE & CAHOON, LLP
P.O. BOX 802334
DALLAS TX 75380

COPY MAILED

MAR 24 2006

OFFICE OF PETITIONS

In re Application of	:	
Boies et al.	:	DECISION ON PETITION TO
Application No. 09/884,580	:	WITHDRAW HOLDING OF
Filed: 19 June, 2001	:	ABANDONMENT
Atty Docket No. YOR920000496US1	:	

This is a decision on the renewed petition filed on 21 February, 2006, to withdraw the holding of abandonment in the above-identified application.

The petition is **GRANTED**.

The application was held abandoned for failure to timely respond to the non-final Office action mailed on 9 December, 2004. Notice of Abandonment was mailed on 29 June, 2005.

Petitioners again assert that an amendment was timely filed. In support, petitioners supplied a copy of an amendment, the first page of which contains a Certificate of Facsimile Transmission dated 9 March, 2005.

Any petition to withdraw the holding of abandonment based on a Certificate of Transmission by facsimile must include the following requirements:

(1) A copy of the original response bearing a signed Certificate of Transmission which includes the date of signing; and

(2) A statement under 37 CFR 1.8(b)(3) attesting to the personal knowledge, or to the satisfaction of the Director, of transmitting the ***original*** response on the date indicated on the Certificate

> of Transmission (*see* 37 CFR 1.8 and MPEP 512). If the correspondence was sent by facsimile transmission, a copy of the sending unit's report confirming transmission may be used to support this statement.

Petitioners state that the individual who signed the certificate of transmission, A.J. Jimenez, no longer is employed by counsel and cannot be located. Petitioners have provided, however, a copy of a mail log as well as a declaration by counsel's legal assistant attesting to the procedure used for sending correspondence to the Office by facsimile. As such, petitioners have demonstrated to the satisfaction of the Director that the response was timely submitted.

As petitioners have provided convincing evidence that a reply to the Office communication requiring restriction or election was transmitted to the USPTO on 9 March, 2005, the showing of record is that a response was timely filed, and there is no abandonment in fact. Any inconvenience caused to applicant is regretted.

The change of correspondence address filed on 21 February, 2006, cannot be accepted because it is not signed by an attorney of record. A copy of this decision is being forwarded to the address in the petition. All future correspondence will be mailed solely to the address of record.

The application is being referred to Technology Center Art Unit 3629 for further processing.

Telephone inquiries concerning this matter may be directed to the undersigned at (571)272-3231.

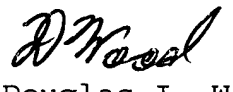

Douglas I. Wood
Senior Petitions Attorney
Office of Petitions

cc: Duke W. Yee
Yee & Associates, P.C.
PO Box 802333
Dallas TX 75380

UNITED STATES PA
TENT AND TRADEMARK OFFICE

Commissioner for Patents
United States Patent and Trademark Office
P.O. Box 1450
Alexandria, VA 22313-1450
www.uspto.g

Date Mailed : June 7, 2007
Patent No. :7,027,429 B2
Ser. No. :09/884581
Inventor(s) :Rajiv Larola, et al.
Issued :April 11, 2006
Title: METHOD AND APPARATUS FOR TIME AND FREQUENCY SYNCHRONIZATION OF OFDM COMMUNICATION OF OFDM COMMUNICATION SYSTEMS

Re: Request for Certificate of Correction

Consideration has been given your request for the issuance of a certificate of correction for the above-identified patent under the provisions of Rule(s) 1.322 and/or 1.323.

Assignees' names and addresses (assignment data) printed in a patent, are based *solely* on information supplied in the appropriate space for identifying the assignment data, i.e., item 3 of the Issue Fee Transmittal Form PTOL-85B. Granting of a request under 37 CFR 3.81(b) is required to correct applicant's error providing ***incorrect or erroneous*** assignment data, *before* issuance of a Certificate of Correction, under 37 CFR 1.323 *(see Manual of Patent Examining Procedures (M.P.E.P) Chp.1400, sect. 1481).* This procedure is required *at any time after the issue fee is paid*, including after issuance of the patent.

In view of the foregoing, your request, in this matter is hereby denied.

A certificate of correction will issue for the remaining errors noted in your request.

A request to correct the Assignee under 37 CFR 3.81(b) should include:

A. **the processing fee set forth in 37 CFR 1.117(h) (currently $130);**
B. a statement that the failure to include the correct assignee name on the PTOL-85B was inadvertent; and
C. a copy of the Notice of Recordation of Assignment Document, reflecting the reel and frame number where the assignment(s) is recorded and/or reflecting proof of *the date* the assignment was submitted for recordation.

In the Request, Applicant(s) may request that the file be forwarded to Certificates of Correction Branch, for issuance of a Certificate of Correction, if the Request is granted.

Any request under 37 CFR 3.81(b) should be directed to the following address or facsimile number:

By mail: Mail Stop PETITIONS

Commissioner for Patents
Post Office Box 1450
Alexandria, VA 22313-1450

By hand: Customer Service Window
Mail Stop Petitions
Randolph Building
401 Dulany Street
Alexandria, VA 22314

By fax: (703) 872-9306
ATTN: Office of Petitions

If a fee (currently $100) was previously submitted for consideration of a Request for Certificate of Correction, under CFR 1.323, to correct assignment data, , no additional fee is required.

Magdalene Talley
For Cecelia Newman, Supervisor
Decisions & Certificates
of Correction Branch
(703) 308-9390 ext. 116 or 125

Qualcomm Incorporated
5775 Morehouse Drive
San Diego, CA 92121-1714

CBN/mt

UNITED STATES PATENT AND TRADEMARK OFFICE

Commissioner for Patents
United States Patent and Trademark Office
P.O. Box 1450
Alexandria, VA 22313-1450
www.uspto.gov

GTC BIOTHERAPEUTICS, INC.
175 CROSSING BOULEVARD, SUITE 410
FRAMINGHAM, MA 01702

COPY MAILED

FEB 03 2005

OFFICE OF PETITIONS

In re Application of	:	
Yann Echelard, et. al.	:	
Application No. 09/884,586	:	ON PETITION
Filed: June 19, 2001	:	
Attorney Docket No. 10275-120001/GTC-31	:	

This is a decision on the petition under 37 CFR 1.137(b), filed December 2, 2004, to revive the above-identified application.

The above-identified application became abandoned as a result of petitioner's failure to file an appeal brief (and fee required by 37 CFR 1.17(c)) within the time period provided in 37 CFR 1.192(a). As an appeal brief (and appeal brief fee) was not filed within two (2) months of the Notice of Appeal filed April 21, 2004, and no extensions of time under the provisions of 37 CFR 1.136(a) were obtained, the appeal was dismissed and the proceedings as to the rejected claims were terminated. See 37 CFR 1.192(b) & 1.197(c). As no claim was allowed, the-above-identified application became abandoned after midnight June 21, 2004. See MPEP 1215.04.

In response, petitioner submitted with the instant petition an authorization to charge the listed deposit account $685 for the petition to revive fee, $395 for the filing of a Request for Continued Examination (RCE) under 37 CFR 1.114, and an amendment. As authorized, the above fees have been charged to petitioner's deposit account.

The petition is **GRANTED**.

The application file is being referred to Technology Center Art Unit 1636, for processing the Request for Continued Examination, and for further review of the amendment filed with the instant petition.

Telephone inquiries concerning this decision should be directed to the undersigned at (571) 272-3226.

Andrea Smith
Petitions Examiner
Office of Petitions
Office of the Deputy Commissioner
for Patent Examination Policy

UNITED STATES PATENT AND TRADEMARK OFFICE

COMMISSIONER FOR PATENTS
UNITED STATES PATENT AND TRADEMARK OFFICE
P.O. BOX 1450
ALEXANDRIA, VA 22313-1450
www.uspto.gov

MORGAN & FINNEGAN, L.L.P.
3 WORLD FINANCIAL CENTER
NEW YORK, NY 10281-2101

COPY MAILED

FEB 27 2006

OFFICE OF PETITIONS

ON PETITION

In re Application of :
Kageyama et al. :
Application No. 09/884,614 :
Filed: June 19, 2001 :
Patent No.: 6,934,058 :
Issued: August 23, 2005 :
Title of Invention: :
IMAGE READING APPARATUS AND :
METHOD WITH READING :
SUSPENSION AND RESUMPTION :
BASED ON MEMORY :
CHARACTERISTICS :

This is a decision on the Petition and Request to Issue a Corrected Patent, filed November 22, 2005. The delay in treating this petition is regretted.

The petition is **dismissed**.

Applicant files the instant petition requesting this Office issue a corrected Patent in order to correct the name of the assignee, and to correct spelling errors in the claims.

Applicant is advised that these are not the type of corrections requiring republication of a corrected patent. In this instance, a certificate of correction is the appropriate remedy.

The file is being referred to the Files Repository.

Telephone inquiries concerning this matter should be directed to the undersigned at (571) 272-3232.

Derek L. Woods
Attorney
Office of Petitions

UNITED STATES PATENT AND TRADEMARK OFFICE

Commissioner for Patents
United States Patent and Trademark Office
P.O. Box 1450
Alexandria, VA 22313-1450
www.uspto.gov

Patent No. : 6934058 B2
Ser. No. : 09/884,614
Inventor(s) : KAGEYAMA, TOMOAKI
Issued : 08/23/05
Title : **IMAGE READING APPARATUS AND METHOD WITH READING SUSPENSION AND RESUMPTION BASED ON MEMORY CHARACTERISTICS.**
Docket No. : **1232-4725**

Re: Request for Certificate of Correction

Consideration has been given your request for the issuance of a certificate of correction for the above-identified patent under the provisions of Rule(s) 1.322 and/or 1.323.

Assignees' names and addresses (assignment data) printed in a patent, are based *solely* on information supplied in the appropriate space for identifying the assignment data, i.e., item 3 of the Issue Fee Transmittal Form PTOL-85B. Granting of a request under 37 CFR 3.81(b) is required to correct applicant's error providing ***incorrect or erroneous*** assignment data, *before* issuance of a Certificate of Correction, under 37 CFR 1.323 *(see Manual of Patent Examining Procedures (M.P.E.P) Chp.1400, sect. 1481).* This procedure is required *at any time after the issue fee is paid*, including after issuance of the patent.

In view of the foregoing, your request, in this mater, is hereby denied again.

A request to correct the Assignee under 37 CFR 3.81(b) should include:

A. **the processing fee set forth in 37 CFR 1.117(h) (currently $130);**
B. a statement that the failure to include the correct assignee name on the PTOL-85B was inadvertent; and
C. a copy of the Notice of Recordation of Assignment Document, reflecting the reel and frame number where the assignment(s) is recorded and/or reflecting proof of *the date* the assignment was submitted for recordation.

In the Request, Applicant(s) may request that the file be forwarded to Certificates of Correction Branch, for issuance of a Certificate of Correction, if the Request is granted.

Any request under 37 CFR 3.81(b) should be directed to the following address or facsimile number:

By mail: Mail Stop PETITIONS
Commissioner for Patents
Post Office Box 1450
Alexandria, VA 22313-1450

By hand: Customer Service Window
Mail Stop Petitions
Randolph Building
401 Dulany Street
Alexandria, VA 22314

By fax: (703) 872-9306
ATTN: Office of Petitions

If a fee (currently $100) was previously submitted for consideration of a Request for Certificate of Correction, under CFR 1.323, to correct assignment data, , no additional fee is required.

Lamonte M. Newsome
For Cecelia Newman
Decisions & Certificates
of Correction Branch
(703) 308-9390 #112 or (703) 308-8309

MORGAN & FINNEGAN, L.L.P.
3 WORLD FINANCIAL CENTER
NEW YORK NY 10281-2101

LMN

UNITED STATES PATENT AND TRADEMARK OFFICE

Commissioner for Patents
United States Patent and Trademark Office
P.O. Box 1450
Alexandria, VA 22313-1450
www.uspto.gov

MORGAN & FINNEGAN, L.L.P.
3 WORLD FINANCIAL CENTER
NEW YORK, NY 10281-2101

COPY MAILED

DEC 01 2006

OFFICE OF PETITIONS

In re Application of	:
Kageyama et al.	:
Application No. 09/884614	:
Filing or 371(c) Date: 06/19/2001	:
Patent No.: 6,934,058	:
Issue Date: 08/23/2005	:
Attorney Docket No.	:
1232-4725	:

This is a decision on the "Request Under 37 C.F.R. § 3.81(b)"[1], filed May 2, 2006, requesting a change in the name of the assignee after payment of the issue fee. The delay in treating this petition is regretted.

The Petition is **granted**.

Telephone inquiries concerning this matter should be directed to the undersigned at (571) 272-3232. Any questions concerning the issuance of the Certificate of Correction should be directed to the Certificate of Correction Branch at (703) 305-8309.

The application is being referred to the Certificate of Corrections Branch for issuance of the requested Certificate of Correction.

Derek L. Woods
Attorney
Office of Petitions

[1] See, 1283 OG 148 22 June 2004, 69 Fed. Reg. 29865 26 May 2004

UNITED STATES PATENT AND TRADEMARK OFFICE

COMMISSIONER FOR PATENTS
UNITED STATES PATENT AND TRADEMARK OFFICE
P.O. BOX 1450
ALEXANDRIA, VA 22313-1450
WWW.USPTO.GOV

Paper No. 12

MARK C. JACOBS, ESQ.
3033 EL CAMINO AVENUE
SACRAMENTO, CA 95821

COPY MAILED

JUN 2 0 2003

OFFICE OF PETITIONS

In re Application of
Durst et al.
Application No. 09/884,656
Filed: June 20, 2001
Attorney Docket No. 1578

ON PETITION

This decision concerns the June 9, 2003 "Petition to Revive Patent" which asserts timely response to an Office action and is being properly treated as a petition under 37 CFR 1.181 to withdraw the holding of abandonment in this application.

The petition is **DISMISSED.**

A non-final Office action was mailed on March 25, 2002 ("3/25/02 Office Action"), setting forth a 3-month shortened statutory reply period. No response was filed on or before June 25, 2002 and no extension of time under 37 CFR 1.136(a) was obtained. The application was held abandoned as of June 26, 2002.

The instant petition asserts that a reply to the 3/25/02 Office Action was submitted to the Examiner by facsimile on May 31, 2002, and again by mail on June 7, 2002 ("6/7/02 Response"), implying that the application should not be held abandoned.

A correspondence in response to an Office action and deposited as first class mail with the USPS in accordance with the procedure set forth in 37 CFR 1.8(a) is considered timely filed in the PTO even if received by the PTO subsequent to the reply period given in that Office action. However, when a correspondence in response to an Office action is not received by the PTO, as is in the instant case, it may still be considered timely filed, provided that the party who mailed the correspondence files a petition:[1]

(1) informing the PTO of the previous mailing of the correspondence promptly after becoming aware that the PTO has no evidence of receipt of the correspondence;[2]

(2) supplying a duplicate of the previously mailed correspondence showing the

---

[1] See 37 CFR 1.8(b).

[2] This condition is considered met, in that, counsel apparently informed the Examiner on 10/23/02 of the previous mailing of the reply.

original §1.8(a) certificate of mailing;[3]

(3) including a statement **attesting, on a personal knowledge basis** or to the satisfaction of the Commissioner, to the previous timely mailing.[4]

The petition meets the above requirements, and thus establishes that a response to the 3/25/02 Office Action was timely mailed, i.e., mailed with a June 7, 2002 Certificate of Mailing.

Unfortunately, while the Office does not dispute the assertion that a response to the 3/25/02 Office Action was timely mailed, albeit not received in the PTO, the Examiner has reviewed the 6/7/02 Response re-submitted by facsimile on 10/23/02, and determined that the response did not place the application in condition for allowance. Therefore, the application is, nonetheless, properly held abandoned as of June 26, 2002 because the timely filed amendment was not fully responsive to the 3/25/02 Office action, and was not entered.[5] The petition is therefore dismissed, and the holding of abandonment in this application is not withdrawn.

Given that the petition refers to "unintentional abandonment," a petition to revive the application under 37 CFR 1.137(b) should be promptly filed to revive this application, by including:[6]

-the $650 petition fee (small entity);[7]

-a statement that the entire delay in submitting a proper reply to the 3/25/02 Office Action from its due date until the filing of a grantable §1.137(b) petition was unintentional;

and should be addressed as follows:

by mail/by hand: Commissioner for Patents
USPTO
Attn: Office of Petitions
Crystal Plaza Four, Suite CP4-3C23
2201 South Clark Place
Arlington, VA 22202

---

[3] The PTO file for this application includes a copy of counsel's 6/7/02 (Certificate of Mailing date) response to the 3/25/02 Office Action, submitted by facsimile on 10/23/02.

[4] Contained in petition.

[5] MPEP section 711.02(a) (Rev. 1, Feb. 2003).

[6] The Notice of Appeal and the $160 filing fee enclosed with the instant petition satisfy the "reply" requirement of 37 CFR 1.137(b)(1).

[7] **The instant petition asserts unintentional abandonment but only encloses a $55 petition fee, which is the fee amount for a petition under 37 CFR 1.137(a) based on unavoidable delay.**

by fax: (703) 308-6916
Attn: Office of Petitions

Finally, the Office acknowledges receipt with the petition of a $55 payment. Since no fee is required for a petition under 37 CFR 1.181, the $55 payment will be credited toward the §1.137(b) petition should one be filed.

Telephone inquiries should be directed to the undersigned at (703) 308-0763.

RC Tang
Petitions Attorney
Office of Petitions

UNITED STATES PATENT AND TRADEMARK OFFICE

COMMISSIONER FOR PATENTS
UNITED STATES PATENT AND TRADEMARK OFFICE
P.O. BOX 1450
ALEXANDRIA, VA 22313-1450
www.USPTO.GOV

Paper No. 15

MARK C. JACOBS, ESQ.
3033 EL CAMINO AVENUE
SACRAMENTO, CA 95821

COPY MAILED

JUL 2 1 2003

OFFICE OF PETITIONS

In re Application of
Durst et al.
Application No. 09/884,656
Filed: June 20, 2001
Attorney Docket No. 1578

ON PETITION

This decision concerns the July 8, 2003 petition under 37 CFR 1.137(b).

The petition is **GRANTED.**

The application became abandoned on June 26, 2002 for failure to timely file a proper response to the March 25, 2002 final Office Action. A petition asserting timely response to that Office action, filed on June 9, 2003 along with a Notice of Appeal, was dismissed on June 20, 2003, in that, the application was properly held abandoned since Applicants' timely reply was non-responsive to the Office action.

The instant petition, accompanied by a Request for Continued Examination (RCE), instructs the PTO to consider the arguments in the June 9, 2003 Notice of Appeal as the "submission" required by 37 CFR 1.114;[1] encloses the $375 RCE filing fee and the $650 petition fee, both in small entity amounts;[2] and includes a statement that the entire delay in filing a proper reply to the March 25, 2002 final Office Action from its due date until the filing of a grantable §1.137(b) petition was unintentional. The petition is thus granted. The application is hereby revived for establishing continuity with the RCE.

With the filing of the instant RCE, and given that the June 9, 2003 Notice of Appeal was never entered, the $160 filing fee for the Notice of Appeal has been refunded.

The application file is being returned to Technology Center 1700 for further examination.

Telephone inquiries should be directed to the undersigned at (703) 308-0763.

RC Tang
Petitions Attorney
Office of Petitions

---

[1] The RCE also instructs considering the "amendment/reply under 37 CFR 1.116 previously filed on 6/4/03" as part of the §1.114 submission. However, no such amendment or reply was filed with the 6/9/03 petition.

[2] The $650 fee consists of a $55 credit from the 6/9/03 petition, and a $595 payment enclosed with the instant petition.

UNITED STATES PATENT AND TRADEMARK OFFICE

COMMISSIONER FOR PATENTS
UNITED STATES PATENT AND TRADEMARK OFFICE
P.O. BOX 1450
ALEXANDRIA, VA 22313-1450
www.uspto.gov

MAIL

NOV 2 2 2004

DIRECTOR OFFICE
TECHNOLOGY CENTER 2100

David W. Carstens
Carstens, Yee & Cahoon, L.L.P.
P.O. Box 802334
Dallas, TX 75380

In re Application of: Carter, et al. Application No. 09/884,661 Filed: June 19, 2001 For: MULTIMEDIA SYNCHRONIZATION METHOD AND DEVICE	)	**DECISION ON PETITION TO MAKE SPECIAL UNDER M.P.E.P.§708.02(II): INFRINGEMENT**

This is a decision on the petition, filed December 8, 2003, under 37 C.F.R. 1.102(d) and M.P.E.P. §708.02(II): Infringement, to make the above-identified application special.

A grantable petition under 37 C.F.R. 1.102(d), and M.P.E.P. §708.02, Section II, must be accompanied by payment of the fee under 37 C.F.R. 1.17(h) and a statement under 37 C.F.R. 1.102 by the applicant or assignee or statements by an attorney/agent registered to practice before the Patent and Trademark Office that: (A) there is an infringing device or product actually on the market or method in use; (B) a rigid comparison of the alleged infringing device, product, or method with the claims of the application has been made, and that, in his or her opinion, some of the claims are unquestionably infringed; and (C) he or she has made or caused to be made a careful and thorough search of the prior art or has a good knowledge of the pertinent prior art. Applicant must provide one copy of each of the references deemed most closely related to the subject matter encompassed by the claims.

The petition filed December 8, 2003 includes all of the requirements set forth above and, therefore, the petition is **GRANTED**.

The application is being forwarded to the examiner to be advanced out of turn for examination in accordance with the procedures set forth in M.P.E.P. §708.02 and 37 C.F.R. 1.102.

Brian L. Johnson
Special Programs Examiner
Technology Center 2100
Computer Architecture, Software, and Information Security
(703) 308-0885

10/26/04

UNITED STATES PATENT AND TRADEMARK OFFICE

Commissioner for Patents
United States Patent and Trademark Office
P.O. Box 1450
Alexandria, VA 22313-1450
www.uspto.gov

Paper No. 21

QUINE INTELLECTUAL PROPERTY LAW GROUP PC
P O BOX 458
ALAMEDA CA 94501

COPY MAILED
JUN 1 5 2004
OFFICE OF PETITIONS

In re Application of	:	
George, et al.	:	
Application No. 09/884,696	:	ON PETITION
Filed: June 19, 2001	:	
Attorney Docket No. 407J-000700US	:	

This is a decision on the "Petition to Withdraw Holding of Abandonment Based on Failure to Receive Office Action" and "Contingent Petition for Revival of an Application for Patent Abandoned Unintentionally Under 37 CFR 1.137(b)", both filed March 29, 2004 (Certificate of Mailing dated March 25, 2004).

The petition under 37 CFR 1.181 is **DISMISSED**.

The petition under 37 CFR 1.137(b) is **GRANTED**.

The above-identified application became abandoned for failure to timely reply to the Notice of Non-Compliant Amendment, mailed April 22, 2003. This Office action set a shortened statutory period for reply of one month. No extensions of time under 37 CFR 1.136(a) were obtained. No reply having been received, the application became abandoned on May 23, 2003. A Notice of Abandonment was mailed on December 12, 2003.

BEST AVAILABLE COPY

Petition Under 37 CFR 1.181:

Petitioner contends that he never received the Notice of Non-Compliant Amendment. Petitioner has not met the showing required to establish non receipt of an Office action. In addition to stating that an Office action was not received, a practitioner must attest to the fact that a search of the file jacket and docket records indicates non-receipt. Furthermore, a practitioner must include a copy of the docket record where the non-received Office communication would have been entered had it been received and docketed.[1] Petitioner has not included a copy of the docket record.

Petition Under 37 CFR 1.137(b):

With the instant petition, petitioner paid the petition fee, made the proper statement of unintentional delay, and filed a response to the Notice of Non-Compliant Amendment.

The application file is being forwarded to Group Art Unit 1645 for consideration of petitioner's response, filed March 29, 2004.

Telephone inquiries concerning this decision should be directed to the undersigned at (703) 305-0272.

Cliff Congo
Petitions Attorney
Office of Petitions

[1] See MPEP 711.03(c)(II).

BEST AVAILABLE COPY

UNITED STATES PATENT AND TRADEMARK OFFICE

Commissioner for Patents
United States Patent and Trademark Office
P.O. Box 1450
Alexandria, VA 22313-1450
www.uspto.gov

TIFFANY & BOSCO
CAMELBACK ESPLANADE II, THIRD FLOOR
2525 EAST CAMELBACK ROAD
PHOENIX AZ 85016

COPY MAILED

AUG 0 1 2007

OFFICE OF PETITIONS

In re Application of
Patrick W. Breslin et al.
Application No. 09/884,706
Filed: June 19, 2001
Attorney Docket No.: 12521-009

ON PETITION

This is a decision on the petition filed April 13, 2007 to withdraw the holding of abandonment, under 37 CFR 1.181.

The petition under 37 CFR 1.181 is **DISMISSED**.

Any request for reconsideration of this decision must be submitted within **TWO (2) MONTHS** from the mail date of this decision. Extensions of time under 37 CFR 1.136(a) are permitted. The reconsideration request should include a cover letter entitled "Renewed Petition under 37 CFR 1.181," or, as explained in more detail below, "...under 37 CFR 1.137(a)" or (b). This is not a final agency decision.

An amendment and three month extension of time were filed in response to a Final Office Action mailed May 12, 2006. In response thereof, an Advisory Action noted that the response filed November 13, 2006 did not place the application in condition for allowance. Thus, since the extendable period for reply had lapsed, the application became abandoned and a Notice of Abandonment was mailed February 14, 2007.

Petitioner argues that the Final Office Action noted in the summary that Claim 6 was objected to but on Page 4 of the action noted that Claim 6 was allowed and therefore because of the ambiguity, the response filed November 13, 2006 was a complete and proper reply and that the holding of abandonment should be withdrawn. Petitioner's arguments have been considered but they are not persuasive.

Petitioners are advised that if an Office communication is mailed and that in the absence of that communication being withdrawn by the USPTO, then by law a complete and proper response is required within the time period set out in the Office communication received. The failure to file a complete and proper response causes the application to become abandoned, even if that communication was sent in error or petitioners believed there to be an error.

If some ambiguity existed as to the status of the claims, it was incumbent upon the petitioner to have it clarified prior to filing a response. Petitioner could have easily contacted the Examiner to determine the status of Claim 6 prior to the expiration of the period for response.

This application properly became abandoned November 14, 2006 for failure to file a complete and proper response to the Final Office Action. Therefore, the Notice of Abandonment mailed February 14, 2006 was appropriate.

In view thereof, the holding of abandonment will not be withdrawn.

ALTERNATIVE VENUES

Petitioner may wish to consider filing a renewed petition under 37 CFR 1.137(a)[1] or 37 CFR 1.137(b),[2] which now provides that where the delay in reply was unintentional, a petition may be filed to revive an abandoned application or a lapsed patent pursuant to 37 CFR 1.137(b).

---

[1]A grantable petition under 37 CFR 1.137(a) must be accompanied by:

(1) the required reply, unless previously filed; In a nonprovisional application abandoned for failure to prosecute, the required reply may be met by the filing of a continuing application. In a nonprovisional utility or plant application filed on or after June 8, 1995, and abandoned for failure to prosecute, the required reply may also be met by the filing of a request for continued examination in compliance with § 1.114. In an application or patent, abandoned or lapsed for failure to pay the issue fee or any portion thereof, the required reply must be the payment of the issue fee or any outstanding balance thereof.

(2) the petition fee as set forth in 37 CFR 1.17(l);

(3) a showing to the satisfaction of the Commissioner that the entire delay in filing the required reply from the due date for the reply until the filing of a grantable petition pursuant to 37 CFR 1.137(a) was unavoidable; and

(4) any terminal disclaimer (and fee as set forth in 37 CFR 1.20(d)) required pursuant to 37 CFR 1.137(c)).

[2]Effective December 1, 1997, the provisions of 37 CFR 1.137(b) now provide that where the delay in reply was unintentional, a petition may be filed to revive an abandoned application or a lapsed patent pursuant to 37 CFR 1.137(b). A grantable petition filed under the provisions of 37 CFR 1.137(b) must be accompanied by:

(1) the required reply, unless previously filed. In a nonprovisional application abandoned for failure to prosecute, the required reply may be met by the filing of a continuing application. In a nonprovisional application filed on or after June 8, 1995, and abandoned for failure to prosecute, the required reply may also be met by the filing of a request for continued examination in compliance with § 1.114. In an application or patent, abandoned or lapsed for failure to pay the issue fee or any portion thereof, the required reply must be the payment of the issue fee or any outstanding balance thereof. In an application abandoned for failure to pay the publication fee, the required reply must include payment of the publication fee.

(2) the petition fee as set forth in 37 CFR 1.17(m);

(3) a statement that the entire delay in filing the required reply from the due date for the reply until the filing of a grantable petition pursuant to 37 CFR 1.137(b) was unintentional. The Commissioner may required additional information where there is a question whether the delay was unintentional; and

(4) any terminal disclaimer (and fee as set forth in 37 CFR 1.20(d)) required pursuant to 37 CFR 1.137(c)).

The filing of a petition under the unintentional standard cannot be intentionally delayed and therefore should be filed promptly. A person seeking revival due to unintentional delay cannot make a statement that the delay was unintentional unless the entire delay, including the delay from the date it was discovered that the application was abandoned until the filing of the petition to revive under 37 CFR 1.137(b), was unintentional. A statement that the delay was unintentional is not appropriate if petitioner intentionally delayed the filing of a petition for revival under 37 CFR 1.137(b).

Further correspondence with respect to this matter should be addressed as follows:

By mail: Mail Stop Petition
Commissioner for Patents
P.O. Box 1450
Alexandria, VA 22313-1450

By FAX: (571) 273-8300

Telephone inquiries concerning this matter may be directed to the undersigned Petitions Attorney at (571) 272-3212.

Patricia Faison-Ball

Patricia Faison-Ball
Senior Petitions Attorney
Office of Petitions

UNITED STATES PATENT AND TRADEMARK OFFICE

Commissioner for Patents
United States Patent and Trademark Office
P.O. Box 1450
Alexandria, VA 22313-1450
www.uspto.gov

TIFFANY & BOSCO
CAMELBACK ESPLANADE II, THIRD FLOOR
2525 EAST CAMELBACK ROAD
PHOENIX AZ 85016

COPY MAILED

NOV 09 2007

OFFICE OF PETITIONS

In re Application of
Patrick W. Breslin et al.
Application No. 09/884,706
Filed: June 19, 2001
Attorney Docket No.: 12521-009

ON PETITION

This is a decision on the petition under 37 CFR 1.137(b)[1], filed October 9, 2007, to revive the above-identified application.

The petition is **GRANTED**.

An amendment and three month extension of time were filed November 13, 2006 in response to a Final Office Action mailed May 12, 2006. In response thereof, an Advisory Action noted that the response filed did not place the application in condition for allowance. Thus, since the extendable period for reply had lapsed, the application became abandoned and a Notice of Abandonment was mailed February 14, 2007.

The present petition under 37 CFR 1.137(b) is accompanied by a revised amendment.

The Examiner has determined that the amendment filed with the present petition places the application in condition for allowance.

---

[1]Effective December 1, 1997, the provisions of 37 CFR 1.137(b) now provide that where the delay in reply was unintentional, a petition may be filed to revive an abandoned application or a lapsed patent pursuant to 37 CFR 1.137(b). A grantable petition filed under the provisions of 37 CFR 1.137(b) must be accompanied by:

(1) the required reply, unless previously filed. In a nonprovisional application abandoned for failure to prosecute, the required reply may be met by the filing of a continuing application. In an application or patent, abandoned or lapsed for failure to pay the issue fee or any portion thereof, the required reply must be the payment of the issue fee or any outstanding balance thereof.

(2) the petition fee as set forth in 37 CFR 1.17(m);

(3) a statement that the entire delay in filing the required reply from the due date for the reply until the filing of a grantable petition pursuant to 37 CFR 1.137(b) was unintentional. The Commissioner may required additional information where there is a question whether the delay was unintentional; and

(4) any terminal disclaimer (and fee as set forth in 37 CFR 1.20(d)) required pursuant to 37 CFR 1.137(c)).

Petitioners are advised also that the fee for a petition to revive has been increased to $1540 effective September 30, 2007 thus, petitioner's deposit account no. 50-3289 has been charged in the amount of the deficiency in the amount submitted by check.

The matter is being referred to Technology Center 3676.

Telephone inquiries concerning this matter may be directed to the undersigned Petitions Attorney at (571) 272-3212.

Patricia Faison-Ball

Patricia Faison-Ball
Senior Petitions Attorney
Office of Petitions

UNITED STATES PATENT AND TRADEMARK OFFICE

Commissioner for Patents
United States Patent and Trademark Office
P.O. Box 1450
Alexandria, VA 22313-1450
www.uspto.gov

CROCKETT & CROCKETT
24012 CALLE DE LA PLATA
SUITE 400
LAGUNA HILLS, CA 92653

COPY MAILED
JUL 26 2006
OFFICE OF PETITIONS

In re Application of Timmerman et al. :
Application No. 09/884,709 : Decision on Petition
Filing Date: June 19, 2001 :
Attorney Docket No. 212/721 :

This is a decision on the petition filed May 9, 2006, under 37 CFR 1.181 to withdraw the holding of abandonment of the above-identified application.

The petition is **dismissed.**

Facts:

A Notice of Allowability was mailed September 20, 2005. The Notice of Allowability required the submission of corrected drawings including changes required by the Notice of Draftperson's Patent Drawing Review attached to a paper mailed July 14, 2003.

Petitioner failed to file a response to the Notice of Allowability. The application became abandoned on December 21, 2005. A Notice of Abandonment was mailed April 21, 2006.

Petitioner has established a Notice of Draftperson's Patent Drawing Review was not mailed July 14, 2003.

Petitioner contends Supervisory Patent Examiner Friedman, during a telephone conversation on May 9, 2006, confirmed a request for corrected drawings should not have been mailed.

Discussion:

35 USC 133 requires that if an action is mailed, and if an applicant fails to respond to such action within 6 months or within any shorter time period set by the Office, the application goes abandoned as a matter of law. The statute does not distinguish "correct" Office actions from "incorrect" Office actions. An Office action in the form of a Notice of Allowability was mailed on September 20, 2005. The Notice provided applicants with three months to file a response. Applicant did not respond to the Office action within 3 months. Therefore, as a matter of law, the application is abandoned.

Abandonment is not based on the correctness, in whole or in part, of an Office action. For example, if an applicant fails to respond to a restriction requirement later determined to be untenable as drafted, the application is abandoned. If an Office action is mailed rejecting claims based on anticipation over a reference that was facially not available as prior art against the application, an applicant must still respond to the Office action in order to avoid abandonment.

Petitioner failed to respond to the Notice of Allowability. Such response could have taken the form of a written traversal stating the facts in the instant petition regarding the original drawings. Petitioner could have directly contacted the examiner and taken steps to have the examiner withdraw the requirement in writing prior to the expiration of the time period for response.

For the reasons above, the holding of abandonment will not be withdrawn.

Petitioner may wish to consider filing a petition to revive based on unintentional abandonment under 37 CFR 1.137(b). A grantable petition pursuant to 37 CFR 1.137(b) must be accompanied by the required reply, the required petition fee ($750 for a small entity), and a statement that the **entire** delay in filing the required reply from the due date for the reply until the filing of a grantable petition pursuant to 37 CFR 1.137(b) was unintentional. A copy of a blank petition form is enclosed for petitioner's convenience.

Any request for reconsideration under 37 CFR 1.181 must be submitted within TWO (2) MONTHS from the mail date of this decision. The reconsideration request should include a cover letter entitled "Renewed Petition under 37 CFR 1.181."

Further correspondence with respect to this matter should be addressed as follows:

By mail: Mail Stop Petition
Commissioner for Patents
P.O. Box 1450
Alexandria, VA 22313-1450

By facsimile: (571) 273-8300
Attn: Office of Petitions

Telephone inquiries regarding this communication should be directed to Petitions Attorney Steven Brantley at (571) 272-3203.

Charles Steven Brantley
Senior Petitions Attorney
Office of Petitions

Attached: Form PTO/SB/64

PTO/SB/64 (10-05)
Approved for use through 07/31/2006. OMB 0651-0031
U.S. Patent and Trademark Office; U.S. DEPARTMENT OF COMMERCE
Under the Paperwork Reduction Act of 1995, no persons are required to respond to a collection of information unless it displays a valid OMB control number.

PETITION FOR REVIVAL OF AN APPLICATION FOR PATENT ABANDONED UNINTENTIONALLY UNDER 37 CFR 1.137(b)

Docket Number (Optional)

First named inventor:

Application No.: Art Unit:

Filed: Examiner:

Title:

Attention: Office of Petitions
Mail Stop Petition
Commissioner for Patents
P.O. Box 1450
Alexandria, VA 22313-1450
FAX (571) 273-8300

NOTE: If information or assistance is needed in completing this form, please contact Petitions Information at (571) 272-3282.

The above-identified application became abandoned for failure to file a timely and proper reply to a notice or action by the United States Patent and Trademark Office. The date of abandonment is the day after the expiration date of the period set for reply in the office notice or action plus an extensions of time actually obtained.

APPLICANT HEREBY PETITIONS FOR REVIVAL OF THIS APPLICATION

NOTE: A grantable petition requires the following items:
(1) Petition fee;
(2) Reply and/or issue fee;
(3) Terminal disclaimer with disclaimer fee - required for all utility and plant applications filed before June 8, 1995; and for all design applications; and
(4) Statement that the entire delay was unintentional.

1. Petition fee

☐ Small entity-fee $ _____ (37 CFR 1.17(m)). Applicant claims small entity status. See 37 CFR 1.27.

☐ Other than small entity – fee $ _____ (37 CFR 1.17(m))

2. Reply and/or fee

A. The reply and/or fee to the above-noted Office action in the form of _____(identify type of reply):

☐ has been filed previously on _____.
☐ is enclosed herewith.

B. The issue fee and publication fee (if applicable) of $ _____.

☐ has been paid previously on _____.
☐ is enclosed herewith.

This collection of information is required by 37 CFR 1.137(b). The information is required to obtain or retain a benefit by the public which is to file (and by the USPTO to process) an application. Confidentiality is governed by 35 U.S.C. 122 and 37 CFR 1.11 and 1.14. This collection is estimated to take 1.0 hour to complete, including gathering, preparing, and submitting the completed application form to the USPTO. Time will vary depending upon the individual case. Any comments on the amount of time you require to complete this form and/or suggestions for reducing this burden, should be sent to the Chief Information Officer, U.S. Patent and Trademark Office, U.S. Department of Commerce, P.O. Box 1450, Alexandria, VA 22313-1450. DO NOT SEND FEES OR COMPLETED FORMS TO THIS ADDRESS. **SEND TO: Mail Stop Petition, Commissioner for Patents, P.O. Box 1450, Alexandria, VA 22313-1450.**

If you need assistance in completing the form, call 1-800-PTO-9199 and select option 2.

Under the Paperwork Reduction Act of 1995, no persons are required to respond to a collection of information unless it displays a valid OMB control number.

3. Terminal disclaimer with disclaimer fee

☐ Since this utility/plant application was filed on or after June 8, 1995, no terminal disclaimer is required.

☐ A terminal disclaimer (and disclaimer fee (37 CFR 1.20(d)) of $ _____ for a small entity or $ _____ for other than a small entity) disclaiming the required period of time is enclosed herewith (see PTO/SB/63).

4. STATEMENT: The entire delay in filing the required reply from the due date for the required reply until the filing of a grantable petition under 37 CFR 1.137(b) was unintentional. [NOTE: The United States Patent and Trademark Office may require additional information if there is a question as to whether either the abandonment or the delay in filing a petition under 37 CFR 1.137(b) was unintentional (MPEP 711.03(c), subsections (III)(C) and (D)).]

WARNING:

Petitioner/applicant is cautioned to avoid submitting personal information in documents filed in a patent application that may contribute to identity theft. Personal information such as social security numbers, bank account numbers, or credit card numbers (other than a check or credit card authorization form PTO-2038 submitted for payment purposes) is never required by the USPTO to support a petition or an application. If this type of personal information is included in documents submitted to the USPTO, petitioners/applicants should consider redacting such personal information from the documents before submitting them to the USPTO. Petitioner/applicant is advised that the record of a patent application is available to the public after publication of the application (unless a non-publication request in compliance with 37 CFR 1.213(a) is made in the application) or issuance of a patent. Furthermore, the record from an abandoned application may also be available to the public if the application is referenced in a published application or an issued patent (see 37 CFR 1.14). Checks and credit card authorization forms PTO-2038 submitted for payment purposes are not retained in the application file and therefore are not publicly available.

Signature	Date
Typed or printed name	Registration Number, if applicable
Address	Telephone Number
Address	

Enclosures:
☐ Fee Payment
☐ Reply
☐ Terminal Disclaimer Form
☐ Additional sheets containing statements establishing unintentional delay
☐ Other: _____

CERTIFICATE OF MAILING OR TRANSMISSION [37 CFR 1.8(a)]

I hereby certify that this correspondence is being:

☐ Deposited with the United States Postal Service on the date shown below with sufficient postage as first class mail in an envelope addressed to: Mail Stop Petition, Commissioner for Patents, P. O. Box 1450, Alexandria, VA 22313-1450.

☐ Transmitted by facsimile on the date shown below to the United States Patent and Trademark Office as (571) 273-8300.

Date	Signature
	Typed or printed name of person signing certificate

Privacy Act Statement

The **Privacy Act of 1974 (P.L. 93-579)** requires that you be given certain information in connection with your submission of the attached form related to a patent application or patent. Accordingly, pursuant to the requirements of the Act, please be advised that: (1) the general authority for the collection of this information is 35 U.S.C. 2(b)(2); (2) furnishing of the information solicited is voluntary; and (3) the principal purpose for which the information is used by the U.S. Patent and Trademark Office is to process and/or examine your submission related to a patent application or patent. If you do not furnish the requested information, the U.S. Patent and Trademark Office may not be able to process and/or examine your submission, which may result in termination of proceedings or abandonment of the application or expiration of the patent.

The information provided by you in this form will be subject to the following routine uses:

1. The information on this form will be treated confidentially to the extent allowed under the Freedom of Information Act (5 U.S.C. 552) and the Privacy Act (5 U.S.C 552a). Records from this system of records may be disclosed to the Department of Justice to determine whether disclosure of these records is required by the Freedom of Information Act.
2. A record from this system of records may be disclosed, as a routine use, in the course of presenting evidence to a court, magistrate, or administrative tribunal, including disclosures to opposing counsel in the course of settlement negotiations.
3. A record in this system of records may be disclosed, as a routine use, to a Member of Congress submitting a request involving an individual, to whom the record pertains, when the individual has requested assistance from the Member with respect to the subject matter of the record.
4. A record in this system of records may be disclosed, as a routine use, to a contractor of the Agency having need for the information in order to perform a contract. Recipients of information shall be required to comply with the requirements of the Privacy Act of 1974, as amended, pursuant to 5 U.S.C. 552a(m).
5. A record related to an International Application filed under the Patent Cooperation Treaty in this system of records may be disclosed, as a routine use, to the International Bureau of the World Intellectual Property Organization, pursuant to the Patent Cooperation Treaty.
6. A record in this system of records may be disclosed, as a routine use, to another federal agency for purposes of National Security review (35 U.S.C. 181) and for review pursuant to the Atomic Energy Act (42 U.S.C. 218(c)).
7. A record from this system of records may be disclosed, as a routine use, to the Administrator, General Services, or his/her designee, during an inspection of records conducted by GSA as part of that agency's responsibility to recommend improvements in records management practices and programs, under authority of 44 U.S.C. 2904 and 2906. Such disclosure shall be made in accordance with the GSA regulations governing inspection of records for this purpose, and any other relevant (*i.e.*, GSA or Commerce) directive. Such disclosure shall not be used to make determinations about individuals.
8. A record from this system of records may be disclosed, as a routine use, to the public after either publication of the application pursuant to 35 U.S.C. 122(b) or issuance of a patent pursuant to 35 U.S.C. 151. Further, a record may be disclosed, subject to the limitations of 37 CFR 1.14, as a routine use, to the public if the record was filed in an application which became abandoned or in which the proceedings were terminated and which application is referenced by either a published application, an application open to public inspection or an issued patent.
9. A record from this system of records may be disclosed, as a routine use, to a Federal, State, or local law enforcement agency, if the USPTO becomes aware of a violation or potential violation of law or regulation.

UNITED STATES PATENT AND TRADEMARK OFFICE

Commissioner for Patents
United States Patent and Trademark Office
P.O. Box 1450
Alexandria, VA 22313-1450
www.uspto.gov

CROCKETT & CROCKETT
24012 CALLE DE LA PLATA
SUITE 400
LAGUNA HILLS, CA 92653

COPY MAILED
AUG 29 2006
OFFICE OF PETITIONS

In re Application of Timmerman et al. :
Application No. 09/884,709 : Decision on Petition
Filing Date: June 19, 2001 :
Attorney Docket No. 212/721 :

This is a decision on the petition under 37 CFR 1.137(b), filed August 14, 2006, to revive the above-identified application.

The petition is **granted**.

A Notice of Allowability was mailed September 20, 2005. Petitioner failed to file a response to the Notice of Allowability. The application became abandoned on December 21, 2005. A Notice of Abandonment was mailed April 21, 2006.

The instant petition requests revival of the application.

Petitioner has met the requirements to revive the above-identified application pursuant to 37 CFR 1.137(b). Therefore, the petition is granted and the application is revived.

The $700 issue fee and $300 publication fee were charged to petitioner's credit card. However, these fees were previously paid on November 29, 2005. Therefore, the Office will credit the $1,000 back to petitioner's credit card.

The Office of Publications will be informed of the instant decision and the application will be issued as a patent in due course.

Telephone inquiries regarding this communication should be directed to Petitions Attorney Steven Brantley at (571) 272-3203.

Charles Steven Brantley
Senior Petitions Attorney
Office of Petitions

UNITED STATES PATENT AND TRADEMARK OFFICE

Commissioner for Patents
United States Patent and Trademark Office
P.O. Box 1450
Alexandria, VA 22313-1450
www.uspto.gov

NOVARTIS
CORPORATE INTELLECTUAL PROPERTY
ONE HEALTH PLAZA 430/2
EAST HANOVER NJ 07936-1080

COPY MAILED

SEP 2 2 2004

OFFICE OF PETITIONS

In re Application of	:
Boyd	:
Application No. 09/884,715	: DECISION ON PETITION
Filed: June 19, 2001	: UNDER 37 CFR 1.78(a)(3)
Attorney Docket No. 4-31830B	:

This is a decision on the petition under 37 CFR 1.78(a)(3), filed January 26, 2004, to accept an unintentionally delayed claim under 35 U.S.C. §§ 120 and 365(c) for the benefit of priority to prior-filed PCT Application No. PCT/GB97/00226, filed January 24, 1997, set forth in the amendment submitted concurrently with the instant petition.

The petition is **DISMISSED AS MOOT**.

Applicant timely claimed benefit to intermediate application no. 09/117,154, which is a 371 application of PCT/GB/97/00226. Now, petitioner seeks to claim benefit of PCT/GB/97/00226, which is the national stage of application no. 09/117,154.

However, no petition is required. As set forth in MPEP 1893.03(c), page 1800-149, a national stage application filed under 35 U.S.C. § 371 may not claim benefit of the filing date of the international application of which it is the national stage since its filing date is the date of filing of that international application. See also MPEP 1893.03(b). In this regard, since the international application is not an earlier application (it has the same filing date as the national stage), a priority claim in the national stage of the international application is inappropriate. Accordingly, it is not necessary for the applicant to amend the first sentence of the specification to reference the international application number that was used to identify the application during international processing of the application by the international authorities prior to commencement of the national stage under 35 U.S.C. §371.

In view of the above, the petition under 37 CFR 1.78(a)(3) is dismissed as involving a moot issue.

The $1,330.00 petition fee submitted with the instant petition will be credited to deposit account no. 19-0134.

Enclosed please find a filing receipt which reflects that application no. 09/117,154 is a 371 application of PCT/GB97/00226.

Any questions concerning this decision on petition may be directed to Senior Petitions Attorney E. Shirene Willis at (703) 308-6712. All other inquiries concerning either the examination procedures or status of the application should be directed to Technology Center AU 1648.

This application is being returned to Technology Center AU 1648 for further examination.

Charles Pearson
Director, Office of Petitions
Office of the Deputy Commissioner
for Patent Examination Policy

enclosure: replacement filing receipt

UNITED STATES PATENT AND TRADEMARK OFFICE

Commissioner for Patents
United States Patent and Trademark Office
Washington, D.C. 20231
www.uspto.gov

Paper No. 9

KENYON & KENYON
1500 K STREET NW
SUITE 700
WASHINGTON DC 20005

COPY MAILED

NOV 22 2002

OFFICE OF PETITIONS

In re Application of	:	
Eric A. Nelson et al	:	
Application No. 09/884,724	:	DECISION GRANTING PETITION
Filed: June 19, 2001	:	UNDER 37 CFR 1.137(f)
Attorney Docket No. 12177/49602	:	

This is a decision on the petition, filed November 4, 2002, to revive the instant nonprovisional application under the unintentional provisions of 37 CFR 1.137(f).

The petition is **GRANTED**.

Petitioner states that the instant nonprovisional application is the subject of an application filed in a foreign country on June 19, 2002. However, the U.S. Patent and Trademark Office was unintentionally not notified of this filing within 45 days subsequent to the filing of the subject application in a foreign country.

In view of the above, this application became abandoned pursuant to 35 U.S.C. § 122(b)(2)(B)(iii) and 37 CFR 1.213(c) for failure to timely notify the Office of the filing of an application in a foreign country, or under a multilateral international agreement, that requires publication of applications 18 months after filing.

A petition under 37 CFR 1.137(f) must be accompanied by:

(1) the reply which is met by the notification of such filing in a foreign country or under a multinational treaty;

(2) the petition fee as set forth in 37 CFR 1.17(m); and

(3) a statement that the entire delay in filing the required reply from the due date of the reply until the filing of a grantable petition was unintentional.

The instant petition has been found to be in compliance with 37 CFR 1.137(f).

Accordingly, the failure to timely notify the Office of a foreign or international filing within 45 days after the date of filing of such foreign or international application as provided by 35 U.S.C. § 122(b)(2)(B)(iii) and 37 CFR 1.213(c) is accepted as having been unintentionally delayed.

The previous Request and Certification under 35 U.S.C. § 122(b)(2)(B)(i) has been rescinded. A Corrected Filing Receipt which sets forth the projected publication date of February 27, 2003 accompanies this decision on petition.

Any inquiries concerning this decision may be directed to the undersigned at (703) 305-8680.

This application is being forwarded to Technology Center Art Unit 2142 for examination in due course.

Frances Hicks
Petitions Examiner
Office of Petitions
Office of the Deputy Commissioner
for Patent Examination Policy

ATTACHMENT: Corrected Filing Receipt

UNITED STATES PATENT AND TRADEMARK OFFICE

Commissioner for Patents
United States Patent and Trademark Office
Washington, D.C. 20231
www.uspto.gov

Paper No. 7

KENYON & KENYON
1500 K STREET NW
SUITE 700
WASHINGTON DC 20005

COPY MAILED

NOV 2 5 2002

OFFICE OF PETITIONS

In re Application of Eric A. Nelson et al Application No. 09/884,730 Filed: June 19, 2001 Attorney Docket No. 12177/45402	DECISION GRANTING PETITION UNDER 37 CFR 1.137(f)

This is a decision on the petition, filed November 4, 2002, to revive the instant nonprovisional application under the unintentional provisions of 37 CFR 1.137(f).

The petition is **GRANTED**.

Petitioner states that the instant nonprovisional application is the subject of an application filed in a foreign country on June 19, 2002. However, the U.S. Patent and Trademark Office was unintentionally not notified of this filing within 45 days subsequent to the filing of the subject application in a foreign country.

In view of the above, this application became abandoned pursuant to 35 U.S.C. § 122(b)(2)(B)(iii) and 37 CFR 1.213(c) for failure to timely notify the Office of the filing of an application in a foreign country, or under a multilateral international agreement, that requires publication of applications 18 months after filing.

A petition under 37 CFR 1.137(f) must be accompanied by:

(1) the reply which is met by the notification of such filing in a foreign country or under a multinational treaty;

(2) the petition fee as set forth in 37 CFR 1.17(m); and

(3) a statement that the entire delay in filing the required reply from the due date of the reply until the filing of a grantable petition was unintentional.

The instant petition has been found to be in compliance with 37 CFR 1.137(f).

Accordingly, the failure to timely notify the Office of a foreign or international filing within 45 days after the date of filing of such foreign or international application as provided by 35 U.S.C. § 122(b)(2)(B)(iii) and 37 CFR 1.213(c) is accepted as having been unintentionally delayed.

The previous Request and Certification under 35 U.S.C. § 122(b)(2)(B)(i) has been rescinded. A Corrected Filing Receipt which sets forth the projected publication date of March 6, 2003 accompanies this decision on petition.

Any inquiries concerning this decision may be directed to the undersigned at (703) 305-8680.

This application is being forwarded to Technology Center Art Unit 2153 for examination in due course.

Frances Hicks

Frances Hicks
Petitions Examiner
Office of Petitions
Office of the Deputy Commissioner
for Patent Examination Policy

ATTACHMENT: Corrected Filing Receipt

UNITED STATES PATENT AND TRADEMARK OFFICE

Commissioner for Patents
United States Patent and Trademark Office
P.O. Box 1450
Alexandria, VA 22313-1450
www.uspto.gov

Paper No.

Marina Portnova
BLAKELY, SOKOLOFF, TAYLOR &
ZAFMAN LLP
12400 Wilshire Blvd.
Seventh Floor
Los Angeles, CA 90025-1026

MAILED

AUG 07 2006

Technology Center 2100

In re Application of:
Fuad Rashid
Application No. 09/884,739
Filed: June 18, 2001
For: CONFIGURATION OF DISPLAYS FOR TARGETED USER COMMUNITIES

DECISION ON REQUEST TO WITHDRAW AS ATTORNEY OR AGENT

This is a decision on the Request To Withdraw from Representation filed June 26, 2006.

A grantable request to withdraw as attorney of record should indicate thereon the present mailing addresses of the attorney(s) who is/are withdrawing from the record and of the applicant. The request for withdrawal must be signed by every attorney seeking to withdraw or contain a clear indication that one attorney is signing on behalf of another/others. A request to withdraw will not be approved unless at least 30 (thirty) days would remain between the date of approval and the later of the expiration date of a time to file a response or the expiration date of the maximum time period which can be extended under 37 C.F.R. ∋ 1. 136(a). The effective date of withdrawal being the date of decision and not the date of request. **See M.P.E.P. ∋ 402.06. 37 C.F.R. ∋ 1.36 further requires that the applicant or patent owner be notified of the withdrawal of the attorney or agent.**

There is no indication that Applicant has been notified of the request for withdrawal.

Accordingly, the request is **DENIED**.

All future communications from the United States Patent and Trademark Office (Office) will continue to be directed to the above-listed address until otherwise notified by applicant.

Applicant is reminded of the obligation to promptly notify the Office of any change in correspondence address to ensure receipt of all communications from the Office.

James R. Matthews

for Vincent N. Trans
Special Program Examiner
Technology Center 2100
Computer Architecture, Software, and
Information Security
(571) 272-3613

UNITED STATES PATENT AND TRADEMARK OFFICE

Commissioner for Patents
United States Patent and Trademark Office
P.O. Box 1450
Alexandria, VA 22313-1450
www.uspto.gov

HEIMLICH LAW
5952 DIAL WAY
SAN JOSE CA 95129

COPY MAILED

FEB 07 2007

OFFICE OF PETITIONS

In re Application of	:	
David Holzer	:	
Application No. 09/884,741	:	DECISION GRANTING PETITION
Filed: June 18, 2001	:	UNDER 37 CFR 1.137(b)
Attorney Docket No. 05168.P007	:	

This is a decision on the petition, filed October 19, 2006, which is being treated as a petition under 37 CFR 1.137(b) to revive the instant nonprovisional application for failure to timely notify the U.S. Patent and Trademark (USPTO) of the filing of an application in a foreign country, or under a multinational treaty that requires publication of applications eighteen months after filing. *See* 37 CFR 1.137(f).

The petition is **GRANTED**.

Petitioner states that the instant nonprovisional application is the subject of an application filed in an eighteen month publication country on November 12, 2001. However, the USPTO was unintentionally not notified of this filing within 45 days subsequent to the filing of the subject application in an eighteen month publication country.

In view of the above, this application became abandoned pursuant to 35 U.S.C. § 122(b)(2)(B)(iii) and 37 CFR 1.213(c) for failure to timely notify the Office of the filing of an application in a foreign country or under a multilateral international agreement that requires publication of applications 18 months after filing.

A petition to revive an application abandoned pursuant to 35 U.S.C. 122(b)(2)(B)(iii) for failure to notify the USPTO of a foreign filing must be accompanied by:

(1) the required reply which is met by the notification of such filing in a foreign country or under a multinational treaty;
(2) the petition fee as set forth in 37 CFR 1.17(m); and
(3) a statement that the entire delay in filing the required reply from the due date of the reply until the filing of a grantable petition was unintentional.

The instant petition has been found to be in compliance with 37 CFR 1.137(b). Accordingly, the failure to timely notify the

USPTO of a foreign or international filing within 45 days after the date of filing of such foreign or international application as provided by 35 U.S.C. § 122(b)(2)(B)(iii) and 37 CFR 1.213(c) is accepted as having been unintentionally delayed.

The previous Request and Certification under 35 U.S.C. § 122(b)(2)(B)(i) has been rescinded.

Any inquiries concerning this decision may be directed to the undersigned at (571) 272-3208.

This application is being referred to Technology Center Art Unit 2143.

Karen Creasy

Karen Creasy
Petitions Examiner
Office of Petitions

UNITED STATES PATENT AND TRADEMARK OFFICE

Commissioner for Patents
United States Patent and Trademark Office
P.O. Box 1450
Alexandria, VA 22313-1450
www.uspto.gov

HEIMLICH LAW
5952 DIAL WAY
SAN JOSE CA 95129

MAILED

APR 0 9 2009

OFFICE OF PETITIONS

In re Application of
David Holzer
Application No. 09/884,741
Filed: June 18, 2001
Attorney Docket No. Digi-P007

DECISION ON PETITION

This is a decision on the petition under the unintentional provisions of 37 CFR 1.137(b), filed March 19, 2009, to revive the above-identified application.

The petition is **GRANTED**.

The petition satisfies the conditions for revival pursuant to the provisions of 37 CFR 1.137(b) in that (1) the reply in the form of an amendment; (2) the petition fee; and (3) the required statement of unintentional delay have been received. Accordingly, the reply to the nonfinal rejection mailed May 30, 2008, is accepted as having been unintentionally delayed.

Telephone inquiries concerning this decision should be directed to the undersigned at (571) 272-3208.

This application is being referred to Technology Center AU 2443 for appropriate action by the Examiner in the normal course of business on the reply received March 19, 2009.

Karen Creasy

Karen Creasy
Petitions Examiner
Office of Petitions

UNITED STATES PATENT AND TRADEMARK OFFICE

COMMISSIONER FOR PATENTS
UNITED STATES PATENT AND TRADEMARK OFFICE
WASHINGTON, D.C. 20231
www.uspto.gov

JJGJr.:09-02

Paper 4

XEROX CORP
XEROX SQUARE
20A
ROCHESTER NY 14644

COPY MAILED
OCT 0 7 2002
OFFICE OF PETITIONS

In re Application of
Bloomberg, et al
Application No. 09/884,759
Filed: 18 June, 2001
Attorney Docket No. D/89194CCR

DECISION ON PETITION

This is a decision on the petition under ¶(a) of 37 C.F.R. §1.47,[1] filed on 24 September, 2002.

Petitioner has shown that, while all other inventors have signed the oath/declaration, the non-signing inventors **Robert F. Tow (Mr. Tow)** has refused or otherwise failed to join in the filing of the above-identified application after having been presented with the application papers, or could not be located to so present them.

Specifically, the declaration/statement/submission of facts of/by Jeannette M. Walder (Reg. No. 30,698) establish that the non-signing inventor was mailed the application papers, including the specification, claims and drawings, but failed to respond positively to the request that he sign the declaration or in fact sign said declaration.

Lastly, Petitioner has submitted a declaration in compliance with 37 C.F.R. §1.63 and §1.64 and petitioner has shown that such action is necessary to prevent irreparable damage.

---

[1] The regulations at 37 C.F.R. §1.47 provide:
§1.47 Filing when an inventor refuses to sign or cannot be reached.
(a) If a joint inventor refuses to join in an application for patent or cannot be found or reached after diligent effort, the application may be made by the other inventor on behalf of himself or herself and the nonsigning inventor. The oath or declaration in such an application must be accompanied by a petition including proof of the pertinent facts, the fee set forth in §1.17(h), and the last known address of the nonsigning inventor. The nonsigning inventor may subsequently join in the application by filing an oath or declaration complying with §1.63.
(b) Whenever all of the inventors refuse to execute an application for patent, or cannot be found or reached after diligent effort, a person to whom an inventor has assigned or agreed in writing to assign the invention, or who otherwise shows sufficient proprietary interest in the matter justifying such action, may make application for patent on behalf of and as agent for all the inventors. The oath or declaration in such an application must be accompanied by a petition including proof of the pertinent facts, a showing that such action is necessary to preserve the rights of the parties or to prevent irreparable damage, the fee set forth in §1.17(h), and the last known address of all of the inventors. An inventor may subsequently join in the application by filing an oath or declaration complying with §1.63.
(c) The Office will send notice of the filing of the application to all inventors who have not joined in the application at the address(es) provided in the petition under this section, and publish notice of the filing of the application in the *Official Gazette*. The Office may dispense with this notice provision in a continuation or divisional application, if notice regarding the filing of the prior application was given to the nonsigning inventor(s).
[47 Fed. Reg. 41275, Sept. 17, 1982, effective Oct. 1, 1982; 48 Fed. Reg. 2709, Jan. 20, 1983, effective Feb. 27, 1983; revised, 62 Fed. Reg. 53131, Oct. 10, 1997, effective Dec. 1, 1997; revised, 65 Fed. Reg. 54604, Sept. 8, 2000, effective Nov. 7, 2000]

This application and papers have been reviewed and found in compliance with 37 C.F.R. §1.47(a).

This application hereby is **ACCORDED status under 37 C.F.R. §1.47(a)**.

As provided under 37 C.F.R. §1.47(a), the Office will forward notice of this application's filing to the non-signing inventors at the addresses given in the petition.

Notice of the filing of this application also will be published in the Official Gazette.

This file is being forwarded to `OIPE for processing consistent with this decision, and then will be forwarded for examination in due course.

Telephone inquiries concerning this decision may be directed to the undersigned at (703) 305-9199.

John J. Gillon, Jr.
Senior Attorney
Office of Petitions
Office of the Deputy Commissioner
for Patent Examination Policy

UNITED STATES PATENT AND TRADEMARK OFFICE

Commissioner for Patents
United States Patent and Trademark Office
Washington, D.C. 20231
www.uspto.gov

Paper No. 3

David B. Ritchie
Thelen Reid & Priest LLP
P.O. Box 640640
San Jose, CA 95164

COPY MAILED

NOV 2 0 2001

OFFICE OF PETITIONS

In re Application of :
Gopal :
Application No. 09/884,801 :
Filed: June 18, 2001 :
Attorney Docket No. CISCO-3666 :

ON PETITION

This is a decision on the petition filed October 11, 2001, to accord the above-identified application a filing date of June 18, 2001, instead of June 19, 2001.

The petition is **granted**.

37 CFR 1.10(c) states,

> Any person filing correspondence under this section that was received by the Office and delivered by the "Express Mail Post Office to Addressee" service of the USPS, who can show that there is a discrepancy between the filing date accorded by the Office to the correspondence and the date of deposit as shown by the "date-in" on the "Express Mail" mailing label or other official USPS notation, may petition the Commissioner to accord the correspondence a filing date as of the "date-in" on the "Express Mail" mailing label or other official USPS notation, provided that:
>
> (1) The petition is filed promptly after the person becomes aware that the Office has accorded, or will accord, a filing date other than the USPS deposit date;
> (2) The number of the "Express Mail" mailing label was placed on the paper(s) or fee(s) that constitute the correspondence prior to the original mailing by "Express Mail;" and
> (3) The petition includes a true copy of the "Express Mail" mailing label showing the "date-in," and of any other official notation by the USPS relied upon to show the date of deposit.

All of the above requirements have been met. Therefore, the application will be accorded a filing date of June 18, 2001.

The file is now being forwarded to the Office of Initial Patent Examination to accord the application a filing date of June 18, 2001.

Telephone inquiries should be directed to Petitions Attorney Steven Brantley at (703) 306-5683.

Charles Steven Brantley
Petitions Attorney
Office of Petitions
Office of the Deputy Commissioner
for Patent Examination Policy

UNITED STATES PATENT AND TRADEMARK OFFICE

COMMISSIONER FOR PATENTS
UNITED STATES PATENT AND TRADEMARK OFFICE
WASHINGTON, D.C. 20231
www.uspto.gov

Paper No. 4

LSI LOGIC CORPORATION
1551 MCCARTHY BLVD
M/S AD-106
MILPITAS, CA 95035

COPY MAILED

AUG 2 1 2001

OFFICE OF PETITIONS

In re Application of
Charles W. Jurgensen et al
Application No. 09/884,805
Filed: June 18, 2001
Attorney Docket No. 98-058/1D

ON PETITION

This is a decision on the petition under 37 CFR 1.182, filed July 30, 2001, to change the order of the names of the inventors.

The petition is **granted**.

The order of the names of the inventors will be changed as follows:

1. Kunal N. Taravade
2. Charles W. Jurgensen
3. Gregory A. Johnson

A corrected filing receipt is enclosed.

The application is being forwarded to Technology Center AU 1763 for examination in due course.

Any questions concerning this matter may be directed to Wan Laymon at (703) 306-5685.

Karen Creasy for

Frances Hicks
Petitions Examiner
Office of Petitions
Office of the Deputy Commissioner
for Patent Examination Policy

Attachment: Corrected Filing Receipt

UNITED STATES PATENT AND TRADEMARK OFFICE

Commissioner for Patents
United States Patent and Trademark Office
P.O. Box 1450
Alexandria, VA 22313-1450
www.uspto.gov

HICKMAN PALERMO TRUONG & BECKER, LLP
2055 GATEWAY PLACE, SUITE 550
SAN JOSE, CA 95110

COPY MAILED

MAY 0 5 2008

OFFICE OF PETITIONS

In re Application of	:
HASTINGS, et al.	:
Application No. 09/884,816	: DECISION GRANTING PETITIONS
Filed: June 18, 2001	: UNDER 37 CFR 1.137(b) AND
Attorney Docket No. **56055-0013**	: 37 CFR 1.314

This is a decision on the petitions, filed August 15, 2007, under 37 CFR 1.137(b), to revive the above-identified unintentionally abandoned application and on the petition under 37 CFR 1.314 to defer the issuance of the above-identified application.

The petitions are **GRANTED.**

As to the petition under 37 CFR 1.137(b):

This application became abandoned for failure to timely pay the issue fee on or before August 1, 2007, as required by the Notice of Allawance and Fee(s) Due mailed May 1, 2007. Accordingly the date of abandonment of this application is August 2, 2007.

The petition satisfies the conditions for revival pursuant to the provisions of 37 CFR 1.137(b) in that petitioner has supplied (1) the reply in the form of payment of the issue fee of $1400, (2) the petition fee of $1500, and (3) an adequate statement of unintentional delay.

As to the petition under 37 CFR 1.314:

Petitioner requests to defer issuance of this application to allow consideration of a Rule 312 submission.

Issuance will be deferred for a period of one month from the date of this decision. At the end of this period, the application will be referred to the Office of Data Management to be processed into a patent.

If an additional deferral period is required, another petition and fee should be promptly submitted. The petition must include a showing of extraordinary circumstances. See MPEP 1306.01.

Further correspondence with respect to this matter should be addressed as follows:

By mail: Mail Stop PETITION
Commissioner for Patents
Post Office Box 1450
Alexandria, VA 22313-1450

By hand: Customer Service Window
Mail Stop Petitions
Randolph Building
401 Dulany Street
Alexandria, VA 22314

By Fax: (571) 273-8300
ATTN: Office of Petitions

Telephone inquiries should be directed to Monica A. Graves at (571) 272-7253.

Sherry D. Brinkley

Sherry D. Brinkley
Petitions Examiner
Office of Petitions

UNITED STATES PATENT AND TRADEMARK OFFICE

Commissioner for Patents
United States Patent and Trademark Office
P.O. Box 1450
Alexandria, VA 22313-1450
www.uspto.gov

PHILIP H. ALBERT
TOWNSEND AND TOWNSEND AND CREW, LLP
TWO EMBARCADERO CENTER
EIGHTH FLOOR
SAN FRANCISCO, CA 94111-3834

COPY MAILED
APR 24 2006
OFFICE OF PETITIONS

In re Application of	
MALLON, KENNETH P., et al	
Application No. 09/884,821	DECISION ON PETITION
Filed: June 18, 2001	TO WITHDRAW
Attorney Docket No. 017887-009000US	FROM RECORD

This is a decision on the Request to Withdraw as attorney or agent of record under 37 C.F.R. § 1.36(b), filed August 23, 2005.

The request is **APPROVED**.

A grantable request to withdraw as attorney/agent of record must be signed by every attorney/agent seeking to withdraw or contain a clear indication that one attorney is signing on behalf of another/others. A request to withdraw will not be approved unless at least 30 (thirty) days would remain between the date of approval and the later of the expiration date of a time to file a response or the expiration date of the maximum time period which can be extended under 37 C.F.R. § 1.136(a).

The request was signed by Albert H. Philip #35,819 on behalf of all attorneys of record who are associated with customer no. 20350.

All attorneys/agents associated with the Customer Number 20350 have been withdrawn.

Applicant is reminded that there is no attorney of record at this time. The Power of Attorney filed October 31, 2005 has not be accepted.

The correspondence address of record has been changed and the new correspondence address is the address indicated below.

Telephone inquiries concerning this decision should be directed to Amelia Au at 571-272-7414.

Amelia Au
Petitions Examiner
Office of Petitions

cc: BRINKS HOFER GILSON & LIONE
NBC TOWER, SUITE 3600
455 N. CITYFRONT PLAZA DRIVE
CHICAGO IL 60611-5599

UNITED STATES PATENT AND TRADEMARK OFFICE

COMMISSIONER FOR PATENTS
UNITED STATES PATENT AND TRADEMARK OFFICE
P.O. BOX 1450
ALEXANDRIA, VA 22313-1450
www.uspto.gov

JAMES MARC LEAS
37 BUTLER DRIVE
S. BURLINGTON, VT 05403

COPY MAILED

JAN 10 2005

OFFICE OF PETITIONS

In re Application of
Pierre P. Repper, et al.
Application No. 09/884,828
Filed: June 18, 2001
Atty Docket No. 932-CAL

: DECISION ON PETITION
: UNDER 37 CFR 1.78(a)(3)
: AND 37 CFR 1.78(a)(6)

This is a decision on the petition under 37 CFR §§ 1.78(a)(3) and 1.78(a)(6), filed November 5, 2004, to accept an unintentionally delayed corrected claim under 35 U.S.C. §§120, 365(c) and 119(e) for the benefit of the prior-filed applications

The petition is **Granted**.

A petition for acceptance of a claim for late priority under 37 CFR §§ 1.78(a)(3) and 1.78(a)(6) is only applicable to those applications filed on or after November 29, 2000. Further, the petition is appropriate only after the expiration of the period specified in 37 CFR §§ 1.78(a)(2)(ii) and 1.78(a)(5)(ii). In addition, the petition under 37 CFR §§ 1.78(a)(3) and 1.78(a)(6) must be accompanied by:

(1) the reference required by 35 U.S.C. §§ 120 and 119(e) and 37 CFR §§ 1.78(a)(2)(i) and 1.78(a)(5)(i) of the prior-filed application, unless previously submitted;

(2) the surcharge set forth in § 1.17(t); and

(3) a statement that the entire delay between the date the claim was due under 37 CFR §§ 1.78(a)(2)(ii) and 1.78(a)(5)(ii) and the date the claim was filed was unintentional. The Commissioner may require additional where there is a question whether the delay was unintentional.

A reference to the prior-filed nonprovisional application has been included in an amendment embodied in the instant petition. Petitioner is reminded that, since different matters may be considered by different branches or sections of the United States Patent and Trademark Office, each distinct subject, inquiry or order must be contained in a separate paper. **See 37 CFR 1.4(c)**.

The instant nonprovisional application was filed after November 29, 2000, and the corrected claim for priority herein is submitted after expiration of the period specified in 37 CFR

§§ 1.78(a)(2)(ii) and 1.78(a)(5)(ii). *See* 35 U.S.C. §§ 120 and 365(c) and § 119(e). Accordingly, having found that the instant petition satisfies the conditions of 37 CFR §§ 1.78(a)(3) and 1.78(a)(6) for acceptance of an unintentionally delayed corrected claim for priority under 35 U.S.C. §§ 120 and 365(c) and § 119(e), the petition to accept an unintentionally delayed claim of benefit to the prior-filed applications is granted.

The granting of the petition to accept the delayed benefit claim to the prior-filed applications under 37 CFR §§ 1.78(a)(3) and 1.78(a)(6) should not be construed as meaning that the instant application is entitled to the benefit of the filing date of the prior-filed applications. In order for the instant application to be entitled to the benefit of the prior-filed applications, all other requirements under 35 U.S.C. §120 and 1.78(a)(1) and (a)(2) and under 35 U.S.C. §119(e) and 37 CFR 1.78(a)(4) and (a)(5) must be met. Similarly, the fact that the corrected Filing Receipt accompanying this decision on petition includes the prior-filed applications should not be construed as meaning that applicant is entitled to the claim for benefit of priority to the prior-filed applications noted thereon.

A corrected Filing Receipt, which includes the priority claim to the prior-filed applications, accompanies this decision on petition.

Any questions concerning this matter may be directed to Sherry D. Brinkley at (571) 272-3204.

This application is being forwarded to Technology Center Art Unit 3749 for consideration by the Examiner of the amendment filed November 5, 2004, including consideration by the examiner of the claim under 35 U.S.C. § §120 and 365(c) and 37 CFR 1.78(a)(2) for the benefit of the prior-filed nonprovisional application, and for consideration of the claim under 35 U.S.C. §119(e) and 37 CFR 1.78(a)(5) for the benefit of the prior-filed provisional application embodied in the petition.

Telephone inquiries related to this decision should be directed to Sherry D. Brinkley at (571) 272-3204.

Sherry D. Brinkley
Petitions Examiner
Office of Petitions
Office of the Deputy Commissioner
for Patent Examination Policy

Karen O. Creasy
Petitions Examiner
Office of Petitions
Office of the Deputy Commissioner
for Patent Examination Policy

ATTACHMENT: Corrected Filing Receipt

UNITED STATES PATENT AND TRADEMARK OFFICE

Commissioner for Patents
United States Patent and Trademark Office
P.O. Box 1450
Alexandria, VA 22313-1450
www.uspto.gov

JAMES MARC LEAS
37 BUTLER DRIVE
S. BURLINGTON, VT 05403

COPY MAILED

JUL 07 2005

OFFICE OF PETITIONS

In re Application of :
Pierre P. Repper et al :
Application No. 09/884,828 : ON PETITION
Filed: June 18, 2001 :
Attorney Docket No. 932-CAL

This is a decision on the petition, filed July 6, 2005, which is being treated as a petition under 37 CFR 1.313(c)(2) to withdraw the above-identified application from issue after payment of the issue fee.

The petition is **GRANTED**.

The above-identified application is withdrawn from issue for consideration of a submission under 37 CFR 1.114 (request for continued examination). See 37 CFR 1.313(c)(2).

Petitioner is advised that the issue fee paid on March 29, 2005 in the above-identified application cannot be refunded. If, however, the above-identified application is again allowed, petitioner may request that it be applied towards the issue fee required by the new Notice of Allowance.[1]

Telephone inquiries should be directed to Irvin Dingle at (571) 272-3210.

This matter is being referred to Technology Center AU 3749 for processing of the request for continued examination under 37 CFR 1.114 and for consideration of the concurrently filed Information Disclosure Statement.

Irvin Dingle
Petitions Examiner
Office of Petitions
Office of the Deputy Commissioner
for Patent Examination Policy

---

[1] The request to apply the issue fee to the new Notice may be satisfied by completing and returning the new Issue Fee Transmittal Form PTOL-85(b), which includes the following language thereon: Commissioner for Patents is requested to apply the Issue Fee and Publication Fee (if any) or re-apply any previously paid issue fee to the application identified above. Petitioner is advised that, whether a fee is indicated as being due or not, the Issue Fee Transmittal Form **must** be completed and timely submitted to avoid abandonment. Note the language in bold text on the first page of the Notice of Allowance and Fee(s) Due (PTOL-85).

UNITED STATES PATENT AND TRADEMARK OFFICE

Commissioner for Patents
United States Patent and Trademark Office
P.O. Box 1450
Alexandria, VA 22313-1450
www.uspto.gov

HOWREY LLP-EU
C/O IP DOCKETING DEPARTMENT
2941 FAIRVIEW PARK DR., SUITE 200
FALLS CHURCH VA 22042

COPY MAILED

DEC 1 0 2008

OFFICE OF PETITIONS

In re Application of
Karel Van Den Berg
Application No. 09/884,829
Filed: June 19, 2001
Attorney Docket No. 04132.0125.000000

NOTICE

This is a notice regarding your request for acceptance of a fee deficiency submission under 37 CFR 1.28. On September 1, 1998, the Court of Appeals for the Federal Circuit held that 37 CFR 1.28(c) is the sole provision governing the time for correction of the erroneous payment of the issue fee as a small entity. **See DH Technology v. Synergystex International, Inc. 154 F.3d 1333, 47 USPQ2d 1865 (Fed. Cir. Sept. 1, 1998).**

The Office no longer investigates or rejects original or reissue applications under 37 CFR 1.56. **1098 Off. Gaz. Pat. Office 502 (January 3, 1989)**. Therefore, nothing in this Notice is intended to imply that an investigation was done.

Your fee deficiency submission under 37 CFR 1.28 is hereby **ACCEPTED**.

This application is no longer entitled to small entity status. Accordingly, all future fees paid in this application must be paid at the large entity rate.

Receipt is acknowledged of the Power Of Attorney To Prosecute Applications Before The USPTO and Statement Under 37 CFR 3.73(b) filed with the instant notice on October 24, 2008. The office records will be corrected accordingly.

Petitioner authorized payment of $130.00 petition fee; however, there is no petition fee when notifying the office the change of entity. Therefore, the $130.00 is being credited to Petitioner's deposit account.

Inquiries related to this communication should be directed to the undersigned at (571) 272-3213.

Cheryl Gibson Baylor

Cheryl Gibson-Baylor
Petitions Examiner
Office of Petitions

UNITED STATES PATENT AND TRADEMARK OFFICE

UNITED STATES DEPARTMENT OF COMMERCE
United States Patent and Trademark Office
Address: COMMISSIONER FOR PATENTS
P.O Box 1450
Alexandria, Virginia 22313-1450
www.uspto.gov

APPLICATION NUMBER	FILING OR 371(C) DATE	FIRST NAMED APPLICANT	ATTY. DOCKET NO./TITLE
09/884,829	06/19/2001	Karel Van den Berg	04132.0125.000000

CONFIRMATION NO. 2485

POA ACCEPTANCE LETTER

32894
HOWREY LLP-EU
C/O IP DOCKETING DEPARTMENT
2941 FAIRVIEW PARK DR., SUITE 200
FALLS CHURCH, VA 22042

OC000000033513479

Date Mailed: 12/09/2008

NOTICE OF ACCEPTANCE OF POWER OF ATTORNEY

This is in response to the Power of Attorney filed 10/24/2008.

The Power of Attorney in this application is accepted. Correspondence in this application will be mailed to the above address as provided by 37 CFR 1.33.

/cpgibson baylor/

Office of Data Management, Application Assistance Unit (571) 272-4000, or (571) 272-4200, or 1-888-786-0101

SPE RESPONSE FOR CERTIFICATE OF CORRECTION

DATE : 4/23/07

Paper No.: _____

TO SPE OF : ART UNIT 2826

SUBJECT : Request for Certificate of Correction on Patent No.: 7081660

A response is requested with respect to the accompanying request for a certificate of correction.

Please complete this form and return with file, within 7 days to:
Palm location **7580, Certificates of Correction Branch – South Tower – 9A22**
If response is for an IFW, **return to employee (named below) via PUBSCofC Team in MADRAS.**
With respect to the change(s) requested, correcting Office and/or Applicant's errors, should the patent read as shown in the certificate of correction (COCIN)? No new matter should be introduced, nor should the scope or meaning of the claims be changed.

Valerie Jackson

Thank You For Your Assistance

Certificates of Correction Branch
Tel. No. 703-308-9390 ext. 114

The request for issuing the above-identified correction(s) is hereby:
Note your decision on the appropriate box.

- ☒ **Approved** — All changes apply.
- ☐ **Approved in Part** — Specify below which changes **do not** apply.
- ☐ **Denied** — State the reasons for denial below.

Comments:

SUE A. PURVIS
SUPERVISORY PATENT EXAMINER

SPE

2826
Art Unit

UNITED STATES PATENT AND TRADEMARK OFFICE

Commissioner for Patents
United States Patent and Trademark Office
P.O. Box 1450
Alexandria, VA 22313-1450
www.uspto.gov

DAVID A. JACOBS
GESMER UPDEGROVE LLP
40 BROAD STREET
BOSTON, MA 02109

COPY MAILED

AUG 1 8 2005

OFFICE OF PETITIONS

In re Application of
Alexander Keller
Application No. 09/884,861
Filed: June 19, 2001
Attorney Docket No. MENT-061

ON PETITION

This is a decision on the petition filed August 2, 2005, to revive the above identified application under 37 CFR 1.137(a)[1] or in the alternative under 37 CFR 1.137 (b)[2].

The petition under 37 CFR 1.137(a) is **DISMISSED**.
The petition under 37 CFR 1.137(b) is **GRANTED**.

A Notice to File Missing Parts was mailed August 14, 2001 and set a two (2) month shortened statutory period for reply. Since the maximum period of time obtainable for

---

[1]A grantable petition under 37 CFR 1.137(a) must be accompanied by:

(1) the required reply, unless previously filed; In a nonprovisional application abandoned for failure to prosecute, the required reply may be met by the filing of a continuing application. In a nonprovisional utility or plant application filed on or after June 8, 1995, and abandoned for failure to prosecute, the required reply may also be met by the filing of a request for continued examination in compliance with § 1.114. In an application or patent, abandoned or lapsed for failure to pay the issue fee or any portion thereof, the required reply must be the payment of the issue fee or any outstanding balance thereof.
(2) the petition fee as set forth in 37 CFR 1.17(l);
(3) a showing to the satisfaction of the Commissioner that the entire delay in filing the required reply from the due date for the reply until the filing of a grantable petition pursuant to 37 CFR 1.137(a) was unavoidable; and
(4) any terminal disclaimer (and fee as set forth in 37 CFR 1.20(d)) required pursuant to 37 CFR 1.137(c)).

[2]Effective December 1, 1997, the provisions of 37 CFR 1.137(b) now provide that where the delay in reply was unintentional, a petition may be filed to revive an abandoned application or a lapsed patent pursuant to 37 CFR 1.137(b). A grantable petition filed under the provisions of 37 CFR 1.137(b) must be accompanied by:

(1) the required reply, unless previously filed. In a nonprovisional application abandoned for failure to prosecute, the required reply may be met by the filing of a continuing application. In a nonprovisional utility or plant application filed on or after June 8, 1995, and abandoned for failure to prosecute, the required reply may also be met by the filing of a request for continued examination in compliance with § 1.114. In an application or patent, abandoned or lapsed for failure to pay the issue fee or any portion thereof, the required reply must be the payment of the issue fee or any outstanding balance thereof.
(2) the petition fee as set forth in 37 CFR 1.17(m);
(3) a statement that the entire delay in filing the required reply from the due date for the reply until the filing of a grantable petition pursuant to 37 CFR 1.137(b) was unintentional. The Commissioner may required additional information where there is a question whether the delay was unintentional; and
(4) any terminal disclaimer (and fee as set forth in 37 CFR 1.20(d)) required pursuant to 37 CFR 1.137(c)).

an extension of time had elapsed and since no proper reply had been received, the application became abandoned on October 15, 2001. Accordingly, a Notice of Abandonment was mailed November 7, 2003.

PETITION UNDER 37 CFR 1.137(a)

The Commissioner may revive an abandoned application if the delay in responding to the relevant outstanding Office requirement is shown to the satisfaction of the Commissioner to be "unavoidable".[3] Decisions on reviving abandoned applications on the basis of "unavoidable" delay have adopted the reasonably prudent person standard in determining if the delay was unavoidable:

> The word 'unavoidable' . . . is applicable to ordinary human affairs, and requires no more or greater care or diligence than is generally used and observed by prudent and careful men in relation to their most important business. It permits them in the exercise of this care to rely upon the ordinary and trustworthy agencies of mail and telegraph, worthy and reliable employees, and such other means and instrumentalities as are usually employed in such important business. If unexpectedly, or through the unforeseen fault or imperfection of these agencies and instrumentalities, there occurs a failure, it may properly be said to be unavoidable, all other conditions of promptness in its rectification being present.[4]

The showing of record is inadequate to establish unavoidable delay within the meaning of 35 U.S.C. § 133 and 37 CFR 1.137(a).[5] Specifically, an application is "unavoidably" abandoned only where petitioner, or counsel for petitioner, takes all action necessary for a proper response to the outstanding Office action, but through the intervention of unforeseen circumstances, such as failure of mail, telegraph, facsimile, or the negligence of otherwise reliable employees, the response is not timely received in the Office.[6]

---

[3] 35 U.S.C. § 133.

[4] In re Mattullath, 38 App. D.C. 497, 514-15 (1912)(quoting Ex parte Pratt, 1887 Dec. Comm'r Pat. 31, 32-33 (1887)); see also Winkler v. Ladd, 221 F. Supp. 550, 552, 138 USPQ 666, 167-68 (D.D.C. 1963), aff'd, 143 USPQ 172 (D.C. Cir. 1963); Ex parte Henrich, 1913 Dec. Comm'r Pat. 139, 141 (1913). In addition, decisions on revival are made on a "case-by-case basis, taking all the facts and circumstances into account." Smith v. Mossinghoff, 671 F.2d 533, 538, 213 USPQ 977, 982 (D.C. Cir. 1982). Finally, a petition cannot be granted where a petitioner has failed to meet his or her burden of establishing that the delay was "unavoidable." Haines v. Quigg, 673 F. Supp. 314, 316-17, 5 USPQ2d 1130, 1131-32 (N.D. Ind. 1987).

[5] See MPEP 711(c)(III)(C)(2) for a discussion of the requirements for a showing of unavoidable delay.

[6] Ex parte Pratt, 1887 Dec. Comm'r Pat. 31 (Comm'r Pat. 1887).

Petitioner asserts that they were unavoidably delayed from filing a timely response to the Office action due to the attorney of record's failure to take action in this matter, failure to respond to their inquiries regarding the status of this and other patent applications and finally his failure to advise the applicants that this and other patent applications had become abandoned.

In order to establish unavoidable delay, petitioner must demonstrate diligence on the part of the attorney of record in prosecution of the matter.[7] Since petitioners can't say for certain whether the attorney of record exercised any diligence with respect to the prosecution of this application, rather than unavoidable delay and a lack of diligence on the part of petitioner's chosen representative, the facts point more towards negligence on the part of the attorney of record. The series of events outlined in the petition suggest that the attorney of record may have been negligent in prosecuting the application and in failing to inform petitioner that the application had become abandoned.

Unfortunately, however, the U.S. Patent and Trademark Office must rely on the actions or inactions of duly authorized and voluntarily chosen representatives of the applicant, and applicant is bound by the consequences of those actions or inaction.[8] Specifically, petitioner's delay caused by the mistakes or negligence of his voluntarily chosen representative however does not constitute unavoidable delay within the meaning of 35 U.S.C. § 133 or 37 CFR 1.137(a).[9]

As petitioner has not provided a showing of evidence to satisfy the requirements of a grantable petition under 37 CFR 1.137(a), the petition will be dismissed.

PETITION UNDER 37 CFR 1.137(b)

This petition, as filed in the alternative under 37 CFR 1.137(b), is granted.

As the present petition was filed and decided under both 37 CFR 1.137(a) and (b), counsel's deposit account, No. 12-2315, has been charged in the amount of $500 for the unavoidable petition and $1500 for the unintentional petition.

---

[7] See Douglas v. Manbeck, 21 USPQ2d 1697, 1700 (E.D. Pa. 1991), aff'd 975 F.2d 869, 24 USPQ2d 1318 (Fed. Cir. 1992).

[8] Link v. Wabash, 370 U.S. 626, 633-34 (1962).

[9] Haines v. Quigg, 673 F. Supp. 314, 5 USPQ2d 1130 (N.D. Ind. 1987); Smith v. Diamond, 209 USPQ 1091 (D.D.C. 1981); Potter v. Dann, 201 USPQ 574 (D.D.C. 1978); Ex parte Murray, 1891 Dec. Comm'r Pat. 130, 131 (Comm'r Pat. 1891).

This matter is being referred to the Office of Initial Patent Examination for further pre-examination processing.

Telephone inquiries concerning this matter may be directed to the undersigned Petitions Attorney at (571) 272-3212.

Patricia Faison-Ball

Patricia Faison-Ball
Senior Petitions Attorney
Office of Petitions

UNITED STATES PATENT AND TRADEMARK OFFICE

Commissioner for Patents
United States Patent and Trademark Office
P.O. Box 1450
Alexandria, VA 22313-1450
www.uspto.gov

JACOBS & KIM LLP
1050 WINTER STREET
SUITE 1000, #1082
WALTHAM MA 02451-1401

COPY MAILED
NOV 03 2006
OFFICE OF PETITIONS

In re Application of	:	
Alexander Keller	:	
Application No. 09/884,861	:	DECISION GRANTING PETITION
Filed: June 19, 2001	:	UNDER 37 CFR 1.313(c)(2)
Attorney Docket No. MENT-061	:	

This is a decision on the petition under 37 CFR 1.313(c)(2), filed November 2, 2006, to withdraw the above-identified application from issue after payment of the issue fee.

The petition is **GRANTED**.

The above-identified application is withdrawn from issue for consideration of a submission under 37 CFR 1.114 (request for continued examination). *See* 37 CFR 1.313(c)(2).

Petitioner is advised that the issue fee paid on September 21, 2006 cannot be refunded. If, however, this application is again allowed, petitioner may request that it be applied towards the issue fee required by the new Notice of Allowance.[1]

Telephone inquiries regarding this decision should be directed to April Wise at (571) 272-1642.

This application is being referred to Technology Center AU 2628 for processing of the request for continued examination under 37 CFR 1.114 and for consideration of the concurrently filed amendment.

Karen Creasy for
Frances M. Hicks
Petitions Examiner
Office of Petitions

[1] *The request to apply the issue fee to the new Notice may be satisfied by completing and returning the new Part B – Fee(s) Transmittal Form (along with any balance due at the time of submission). Petitioner is advised that the Issue Fee Transmittal Form* ***must*** *be completed and timely submitted to avoid abandonment of the application.*

UNITED STATES PATENT AND TRADEMARK OFFICE

Commissioner for Patents
United States Patent and Trademark Office
P. O. Box 1450
Alexandria, VA 22313-1450
www.uspto.gov

Paper No. 13

Kenneth D'Alessandro
Sierra Patent Group, Ltd.
P.O. Box 6149
Stateline, NV 89449

COPY MAILED

MAY 21 2003

OFFICE OF PETITIONS

In re Application of	:	
Richard MERRILL	:	
Application No. 09/884,863	:	DECISION GRANTING PETITION
Filed: June 18, 2001	:	UNDER 37 CFR 1.137(f)
Attorney Docket No. FOV-053	:	

This is a decision on the petition, filed May 12, 2003, to revive the instant nonprovisional application under the unintentional provisions of 37 CFR 1.137(f).

The petition is **GRANTED**.

Petitioner states that the instant nonprovisional application is the subject of an application filed in a foreign country on September 20, 2001. However, the U.S. Patent and Trademark Office was unintentionally not notified of this filing within 45 days subsequent to the filing of the subject application in a foreign country.

In view of the above, this application became abandoned pursuant to 35 U.S.C. § 122(b)(2)(B)(iii) and 37 CFR 1.213(c) for failure to timely notify the Office of the filing of an application in a foreign country, or under a multilateral international agreement, that requires publication of applications 18 months after filing.

A petition under 37 CFR 1.137(f) must be accompanied by:

(1) the reply which is met by the notification of such filing in a foreign country or under a multinational treaty;

(2) the petition fee as set forth in 37 CFR 1.17(m); and

(3) a statement that the entire delay in filing the required reply from the due date of the reply until

the filing of a grantable petition was unintentional.

The instant petition has been found to be in compliance with 37 CFR 1.137(f). Accordingly, the failure to timely notify the Office of a foreign or international filing within 45 days after the date of filing of such foreign or international application as provided by 35 U.S.C. § 122(b)(2)(B)(iii) and 37 CFR 1.213(c) is accepted as having been unintentionally delayed.

The previous Request and Certification under 35 U.S.C. § 122(b)(2)(B)(I) has been rescinded.

Any inquiries concerning this decision may be directed to B. Dayoan at (703) 308-3865 or, in her absence, to the undersigned at (703) 305-8680.

This application is being forwarded to Technology Center Art Unit 2823 for further examination in view of the response filed February 20, 2003.

Frances Hicks

Frances Hicks
Petitions Examiner
Office of Petitions
Office of the Deputy Commissioner
for Patent Examination Policy

UNITED STATES PATENT AND TRADEMARK OFFICE

COMMISSIONER FOR PATENTS
UNITED STATES PATENT AND TRADEMARK OFFICE
P.O. BOX 1450
ALEXANDRIA, VA 22313-1450
WWW.USPTO.GOV

KENNETH D'ALESSANDRO
SIERRA PATENT GROUP, LTD.
P O BOX 6149
STATELINE, NV 89449

COPY MAILED

APR 07 2004

OFFICE OF PETITIONS

In re Application of	:
Merrill	:
Application No. 09/884,863	: DECISION ON PETITION
Filed: June 18, 2001	:
Attorney Docket No. FOV-053	:

This is in response to the communication entitled "Request for Refund of Petition Fee," filed June 2, 2003, which is being treated as (1) a petition under 37 CFR 1.181 for refund, and (2) a petition under 37 CFR 1.183 seeking waiver of 37 CFR 1.4(b).

The petition considered under 37 CFR 1.181 for a refund is **dismissed**.

The petition considered under 37 CFR 1.183 as a request for waiver of the rules is **dismissed.**

THE UNFORTUNATE REFUND OF THE PETITION FEE IN SEPTEMBER 2003 IS VACATED AS PERFORMED IN ERROR. PETITIONER IS GIVEN A NON EXTENDABLE TIME PERIOD OF *ONE MONTH* TO RESUBMIT THE $650 PETITION FEE. FAILURE TO TIMELY RESUBMIT THE $1300 PETITION FEE WILL RESULT IN VACATUR OF THE DECISION REVIVING THIS APPLICATION MAILED MAY 21, 2003.

BACKGROUND

The above-identified application papers were deposited on June 18, 2001. With the filing, applicant included a "Request for Nonpublication Pursuant to 37 C.F.R. § 1.213," which reads:

> Applicant hereby requests that this application not be published under 35 U.S.C. § 122(b). Applicant certifies that the invention disclosed in the application has not been and will not be the subject of an application filed in another country, or under a multi-lateral agreement,

that requires publication at eighteen months after filing.

However, on August 23, 2001, the office of Initial Patent Examination mailed a Notice indicating that while the instant application papers were entitled to a filing date, the application remained incomplete and the deficiencies noted therein had to be supplied within an extendable two month period or the application would become abandoned.

On September 20, 2001, applicant filed an international treaty (PCT) application with the USPTO as the receiving office that apparently claimed priority benefit of the instant application.

On September 24, 2001, applicant filed a "Transmittal Letter for Request to Rescind Nonpublication," along with Form PTO/SB/36 (11-00). This request stated that "I hereby rescind the previous request that the above-identified Application not be published under 35 U.S.C. 122(b)." The rescission clearly does not make any mention that a PCT application had been be filed on September June 20, 2001.

On September 28, 2001, applicant timely filed the missing items required by the Notice of August 13, 2001.

On May 12, 2003, applicant filed a petition to revive under 37 CFR 1.137(f) and stated that the invention disclosed in the above-identified application was filed in a foreign country or under international treaty entailing 18 month publication on September 20, 2001. Since applicants first provided the notice of foreign filing as required by 35 U.S.C. 122(b)(2)(B)(iii) and 37 CFR 1.213(c) when applicant filed the petition to revive on May 12, 2003, the notice of the foreign filing as required by 35 U.S.C. 122(b)(2)(B)(iii) was not filed within 45 days of the date of filing of the international application. As such, the above-identified application became abandoned at midnight on October 5 2001.

The petition under 37 CFR 1.137(f) filed May 12, 2003, was granted in the decision of May 21, 2003, which excused applicant's unintentional delay in filing the necessary timely notification.

On June 2, 2003 the instant petition for a refund was filed.

On September 25, 2003, Office of Petitions personnel erroneously

approved the request for a refund filed June 2, 2003.

STATUTE AND REGULATION

35 U.S.C. § 122b(2)(B) states, in pertinent part:

> (i) If an applicant makes a request upon filing, certifying that the invention disclosed in the application has not and will not be the subject of an application filed in another country, or under a multilateral international agreement, that requires publication of applications 18 months after filing, the application shall not be published as provided in paragraph (1).
>
> (ii) **An applicant may rescind a request made under clause (i) at any time.**
>
> (iii) An applicant who has made a request under clause (i) but who subsequently files, in a foreign country or under a multilateral international agreement specified in clause (i), an application directed to the invention disclosed in the application filed in the Patent and Trademark Office, shall notify the Director of such filing not later than 45 days after the date of the filing of such foreign or international application. **A failure of the applicant to provide such notice within the prescribed period shall result in the application being regarded as abandoned**, unless it is shown to the satisfaction of the Director that the delay in submitting the notice was unintentional.
>
> (iv) If an applicant rescinds a request made under clause (i) **or** notifies the Director that an application was filed in a foreign country or under a multilateral international agreement specified in clause (i), the application shall be published in accordance with the provisions of paragraph (1) on or as soon as is practical after the date that is specified in clause (i).[1]

37 CFR 1.213 states:

> (a) If the invention disclosed in an application has

---

[1] Emphasis added.

not been and will not be the subject of an application filed in another country, or under a multilateral international agreement, that requires publication of applications eighteen months after filing, the application will not be published under 35 U.S.C. 122(b) and § 1.211 provided:

(1) A request (nonpublication request) is submitted with the application upon filing;

(2) The request states in a conspicuous manner

that the application is not to be published under 35 U.S.C. 122(b);

(3) The request contains a certification that the invention disclosed in the application has not been and will not be the subject of an application filed in another country, or under a multilateral international agreement, that requires publication at eighteen months after filing; and

(4) The request is signed in compliance with § 1.33(b).

(b) The applicant may rescind a nonpublication request at any time. A request to rescind a nonpublication request under paragraph (a) of this section must:

(1) Identify the application to which it is directed;

(2) State in a conspicuous manner that the request that the application is not to be published under 35 U.S.C. 122(b) is rescinded; and

(3) Be signed in compliance with § 1.33(b).

(c) If an applicant who has submitted a nonpublication request under paragraph (a) of this section subsequently files an application directed to the invention disclosed in the application in which the nonpublication request was submitted in another country, or under a multilateral international agreement, that requires publication of applications eighteen months after filing, the applicant must notify

> the Office of such filing within forty-five days after the date of the filing of such foreign or international application. The failure to timely notify the Office of the filing of such foreign or international application shall result in abandonment of the application in which the nonpublication request was submitted (35 U.S.C. 122(b)(2)(B)(iii)).

OPINION

Petitioner requests a refund for the following reasons:

1. The position taken by the USPTO that a transmittal letter to the Receiving Office (USPTO) does not constitute notice of such

filing because of the provisions of 37 CFR 1.4(b) is legally incorrect.

2. The statute, as well as the rule, does not specify the manner in which such notice of foreign filing be given to the Director, but merely provides that notice of a foreign filing be given.

3. Neither the Notice of Proposed Rulemaking, 65 FR 17946, 17957 (2000), nor the final rulemaking notice in the Official Gazette of October 10, 2000, specify or imply any requirement that the statutory notice to the Director be captioned as or even placed in the file of the United States patent application.

4. Lastly, applicant submits that the filing of the PCT request in the PCT Receiving Office of the United States serves as the notice to the Director of the filing of the PCT application as required by both 35 U.S.C. § 122(b)(2)(B)(iii) and 37 CFR 1.213(c); that the filing of any paper in the USPTO constitutes actual notice to the Director of the filing of that paper.

Applicant additionally requests suspension of the provisions of 37 CFR 1.4(b) under 37 CFR 1.183, which latter issue will be treated first.

<u>With respect to the petition for waiver under 37 CFR 1.183:</u>

Since this petition is not accompanied by the $130 fee required by 37 CFR 1.17(h) for filing a petition under 37 CFR 1.183, no consideration on the merits of the petition will be given.

With respect to the request for refund:

The legislative history relevant to the instant issues, as reported in the Congressional indicates that, if applicant has requested nonpublication because the application will not be filed "in a foreign country with a publication requirement, subparagraph (B)(iii) imposes a duty on the applicant to notify the Director of this fact. An unexcused failure to notify the Director will result in abandonment of the application." See 145 Cong. Rec. S14,718 (November 17, 1999).

35 U.S.C. 122(b)(2)(B)(iii) provides that if an applicant informs the Office that the application has not been and will not be "foreign filed," such an applicant must inform the Office of the subsequent foreign filing no later than 45 days after foreign filing or the application will be treated as abandoned. Since applicant did not provide the required notice, the above-identified application is properly treated as abandoned, and the fees for the necessary remedy fell due. 35 U.S.C. § 42(d) permits a refund of "any fee paid by mistake or any amount paid in excess of that required." Thus, the United States Patent and Trademark Office (USPTO) may refund: (1) a fee paid when no fee is required (a fee paid by mistake); or (2) any fee paid in excess of the amount of fee that is required. See Ex Parte Grady, 59 USPQ 276, 277 (Comm'r Pats. 1943) (the statutory authorization for the refund of fees is applicable only to a mistake relating to fee payment). However, petitioner has not shown, nor does inspection of the record reveal, that the fees in question were paid either in excess or by mistake. Since the fees were paid in the proper amounts, there is no question as to whether the fees were laid in excess. Further, since this application became abandoned by operation of 35 U.S.C. 122(b), the petition fee for revival of this application was not a fee paid by mistake. As such, no refund is due applicant.

Contrary to petitioner's contentions, a review of the file record fails to disclose that applicant's rescission notice filed September 24, 2001, made any mention of a foreign or international treaty filing that had or would occur. Applicant's rescission notice simply does not state that the form should be treated as notice of foreign filing pursuant to 35 U.S.C. 122(b)(2)(B)(iii) and 37 CFR 1.213(c). Nothing in a rescission of a nonpublication request implies that the U.S. application has been or will be foreign filed. Most patent applications filed on or after November 29, 2000, will be published, unless applicant files a request for nonpublication in compliance with 37 CFR

1.213(a). A nonpublication request is required to contain a certification that "the invention disclosed in the application has not been and will not be the subject of an application filed in another country, or under a multilateral international agreement that requires publication at eighteen months after filing." Applicants who do not plan to file in another country are not required to file such a certification, and given that provisional rights (see 35 U.S.C. § 154(d)) may become available to those who have their patent applications publish, some applicants who do not plan to file in another country may elect to have their application published to be eligible for provisional rights. As a result, the filing of a rescission of a nonpublication request does not imply that the invention has been or will be foreign filed, and instead simply denotes that applicant now desires to have the application published in the United States, which of course may confer provisional rights.

Furthermore, if a mere notice of rescission could properly be construed as a concomitant notice of foreign filing, without any reference to a foreign filing, then 35 U.S.C. § 122(b)(2)(B)(iii) would have included some reference to a rescission. For example, the statute could have provided that the "rescission specified in clause (ii) must be filed no later than 45 days after the date of foreign filing." Instead, clause (iii) specified that an "applicant who has made a request under clause (i)...shall notify the Director of such filing no later than 45 days after the date of such filing."

Implicit in providing notice of foreign filing is a rescission of the nonpublication request for both actions will result in publication of the application (see 35 U.S.C. 122(b)(2)(B)(iv)), but a request to publish a patent application (to rescind a nonpublication request) does not communicate any information about, or is otherwise necessarily linked to, a foreign or international treaty filing. Thus, the statute clearly identifies rescission of a nonpublication request and notification of a foreign filing as two separate acts, and a rescission in and of itself cannot be construed as notice of foreign filing.

Here, applicant's request to rescind the previously filed nonpublication request did not provide any notice of the foreign filing. Accordingly, it did not comply with 35 U.S.C. 122(b)(2)(B)(iii). The Office has no authority pursuant to 37 CFR 1.183 to treat a rescission under 35 U.S.C. 122(b)(2)(B)(ii) as the notice of foreign filing required by 35 U.S.C.

122(b)(2)(B)(iii). In addition, the Office has no authority to waive the 45 day period set forth in 35 U.S.C. 122(b)(2)(B)(iii), as a result, the application must be regarded as abandoned. **These are statutory requirements and a statutory requirement can not be waived under the provisions of 37 CFR 1.183.**

As to the arguments that no specific notice is required and that filing an international [PCT] application in the United States Receiving Office was the required notification of foreign filing to the Director, these arguments are also not persuasive. 37 CFR 1.213(c) requires the applicant to provide notice, and 37 CFR 1.4(b) provides that each application must be complete in itself. While petitioner contends that 37 CFR 1.213 does not specify that the notification have been filed in this application, 37 CFR 1.4(b) does require that this file be complete in of itself. The PCT filing transmittal was not a paper captioned for this application within the meaning of 37 CFR 1.5.

An international application would not be placed into the file of an application that it relies upon for the benefit of an earlier filing date, and so applicant was required to file a separate paper pursuant to 37 CFR 1.4(b) in the above-identified application for any notice to be property given. Therefore, the mere filing of a PCT application is not the notification required by 35 U.S.C. § 122(b)(2)(B)(iii) and 37 CFR 1.213(c). Petitioner's attention is also directed to 37 CFR 1.4(c), which states:

> Since different matters may be considered by different branches or sections of the United States Patent and Trademark Office, each distinct subject, inquiry or order must be contained in a separate paper to avoid confusion and delay in answering papers dealing with different subjects.

Pursuant to 37 CFR 1.4(c), the separate paper was required to address a distinct subject, so a notification of foreign filing was required to be on a separate paper from another matter (such as a transmittal of a new application). 37 CFR 1.4(b) and 1.4(c) refute petitioner's contention that notice to the PCT Receiving Office operation within the USPTO also is the required notice the national stage processing area(s) of a foreign or treaty filing, and likewise answer petitioner's assertion that 35 U.S.C. 122 (b) and 37 CFR 1.213 do not require that the applicant inform the

USPTO of the later treaty or foreign filing by filing a notice in the prior U.S. national application.

Indeed inspection of 35 U.S.C. 122(b) itself refutes applicant's contentions that the mere fact of filing of the PCT application operated as the required statutory notice to the USPTO. The relevant clause of 35 U.S.C. 122(b)(2)((B)(iii) sets forth that the applicant who, as here, has filed an application under a multilateral international agreement **directed to the invention disclosed in the application filed in the Patent and Trademark office, shall notify the Director... of such filing**." Thus, the obligation to make a comparison of the invention disclosed in the application filed in the United States, with the invention disclosed in the application filed in the foreign country or under the multilateral international agreement rests with the applicant who has made the filings.

Petitioner would have the USPTO believe The statute does not obligate the Director to make a comparison of the invention disclosed in each applicant's U.S. application with the invention disclosed in each and every of that same applicant's foreign applications or applications filed under a multilateral international agreement; that is the applicants duty. Indeed, it would be impossible for the USPTO to try to detect any--much less all--foreign or treaty filings of all those applicants who likewise have filed an application in the U.S., Further such would fly in the face of the applicant's certification present on filing that no such foreign or treaty filing had been or would be undertaken, on the mere chance hat a possible abandonment under § 122(b) had occurred, and such would prevent the USPTO from performing its more substantive duty of examining the applications it has on file.

Such an interpretation of the statute is untenable and the burden such an interpretation it would place on the USPTO unbearable. <u>But see</u> <u>Griffin v. Oceanic Contractors, Inc.</u>, 458 U.S. 564, 575 (1982)("[I]nterpretations of a statute which would produce absurd results are to be avoided if alternative interpretations consistent with the legislative purpose are available.") Rather, such a burden is properly borne by those who do the diverse filings and as such are in the best position to make the relationship determination required by 35 U.S.C. 122(b)(2)(B)(i).

Indeed it would be improper for the Director to assume, contrary to what petitioner appears to contend, that each and every

notification of the fact that benefit of a prior U.S. national application was being claimed upon USPTO receipt of a filing under the PCT filing was the notification required by 35 U.S.C. 122(b)(2)(B)(iii). If such were to be construed as a proper notification then the USPTO the referenced U.S. national application would automatically be cleared for pre grant publication. However, that would tend to compromise the confidentiality requirements of 35 U.S.C. § 122(a) for those referenced applications, based upon an unwarranted assumption, by the USPTO, that the PCT application was directed to the invention disclosed in the prior U.S. national application.

However, the mere fact that benefit of a given prior U.S. national application may have been claimed when a PCT application was deposited with the USPTO does not necessarily mean the PCT application is directed to the invention disclosed in the given prior U.S. national application filed in the United States within the meaning of 35 U.S.C. § 122(b)(2)((B)(i). Cf. In re Gosteli, 872 F.2d. 1008, 10 USPQ2d 1614 (Fed. Cir. 1989) (patentee's § 120 claim for benefit of filing date of an earlier filed U.S. application refused, notwithstanding satisfaction of the formal requirements to claiming benefit of the aforementioned application, since judicial determination holds later claimed invention not found in prior application); New Railhead Manufacturing LLC v. Vermeer Manufacturing Co.,63 USPQ2d 1843 (Fed Cir. 2002) (patentee's § 119(e) claim for benefit of filing date of earlier filed U.S. provisional application refused notwithstanding satisfaction of the formal requirements for claiming benefit, since judicial determination holds later claimed invention not found in prior provisional application).

A fair reading of 35 U.S.C. § 122b reveals that it is the applicant who has filed the prior application in the U.S. and the later application under a treaty PCT or in a foreign country, who must notify the USPTO within 45 days when that treaty or foreign application is directed to the invention already on file at the USPTO. The statute does not make distinctions between whether the applicant has deposited the subsequently filed application in the USPTO as the receiving office, or with a foreign receiving office, or even with a foreign patent office; the statute requires the applicant to notify the USPTO within 45 days of that deposit if the latter filed application is for the invention disclosed in the prior U.S. application. Only the applicant, not the USPTO, is able to make the determination that the latter filed application is for the invention disclosed in the prior U.S. application for all eventualities. Contrary to petitioner's

position, the statute does not authorize, much less compel, the USPTO to determine if the later filed treaty or foreign application is for the invention disclosed in the application on file in the USPTO. If such were the case then the USPTO would have to continuously monitor all foreign patent offices and treaty application receiving offices for all priority claims involving prior U.S. filed applications, and if no notification was received within 45 days of the later filing or deposit or no withdrawal had been received in the USPTO, hold the application abandoned. Such an absurd result is avoided merely by interpreting the statute as requiring the applicant to make the comparison as well as the notification. See Griffin, supra.

WITH RESPECT TO THE REFUNDED PETITION FEE

The petition fee was due to the USPTO on filing the petition regardless of the applicability of the statute or outcome of the decision, and, as such, is not refundable and will not be refunded. See Ex parte VENTURA CITRUS ASSOCIATION, 71 USPQ 103, 104 (Comm'r Pat. 1946). As such, petitioner is advised that in the continued absence of the requisite petition fee, the decision mailed May 21, 2003, cannot be regarded as having continuing force and effect. Accordingly, petitioner is given ONE MONTH to resubmit the $1300 petition fee. In the absence of a timely resubmission of the petition fee, the decision of May 21, 2003 will be vacated.

Further correspondence with respect to this matter should be addressed as follows:

By mail: Mail Stop PETITION
Commissioner for Patents
Post Office Box 1450
Alexandria, VA 22313-1450

By hand: 2011 South Clark Place
Crystal Plaza Two, Lobby
Room 1B03
Arlington, VA 22202

By FAX: (703) 872-6906
ATTN: Office of Petitions

Any inquiries concerning this decision may be directed to the undersigned at (703) 305-8680.

Brian Hearn

Brian Hearn
Petitions Examiner
Office of Petitions
Office of the Deputy Commissioner
for Patent Examination Policy

UNITED STATES PATENT AND TRADEMARK OFFICE

Commissioner for Patents
United States Patent and Trademark Office
P. O. Box 1450
Alexandria, VA 22313-1450
www.uspto.gov

Paper No. 13

Kenneth D'Alessandro
Sierra Patent Group, Ltd.
P.O. Box 6149
Stateline, NV 89449

COPY MAILED

MAY 2 1 2003

OFFICE OF PETITIONS

In re Application of	:	
Richard MERRILL	:	
Application No. 09/884,863	:	DECISION GRANTING PETITION
Filed: June 18, 2001	:	UNDER 37 CFR 1.137(f)
Attorney Docket No. FOV-053	:	

This is a decision on the petition, filed May 12, 2003, to revive the instant nonprovisional application under the unintentional provisions of 37 CFR 1.137(f).

The petition is **GRANTED**.

Petitioner states that the instant nonprovisional application is the subject of an application filed in a foreign country on September 20, 2001. However, the U.S. Patent and Trademark Office was unintentionally not notified of this filing within 45 days subsequent to the filing of the subject application in a foreign country.

In view of the above, this application became abandoned pursuant to 35 U.S.C. § 122(b)(2)(B)(iii) and 37 CFR 1.213(c) for failure to timely notify the Office of the filing of an application in a foreign country, or under a multilateral international agreement, that requires publication of applications 18 months after filing.

A petition under 37 CFR 1.137(f) must be accompanied by:

(1) the reply which is met by the notification of such filing in a foreign country or under a multinational treaty;

(2) the petition fee as set forth in 37 CFR 1.17(m); and

(3) a statement that the entire delay in filing the required reply from the due date of the reply until

the filing of a grantable petition was unintentional.

The instant petition has been found to be in compliance with 37 CFR 1.137(f). Accordingly, the failure to timely notify the Office of a foreign or international filing within 45 days after the date of filing of such foreign or international application as provided by 35 U.S.C. § 122(b)(2)(B)(iii) and 37 CFR 1.213(c) is accepted as having been unintentionally delayed.

The previous Request and Certification under 35 U.S.C. § 122(b)(2)(B)(I) has been rescinded.

Any inquiries concerning this decision may be directed to B. Dayoan at (703) 308-3865 or, in her absence, to the undersigned at (703) 305-8680.

This application is being forwarded to Technology Center Art Unit 2823 for further examination in view of the response filed February 20, 2003.

Frances Hicks
Petitions Examiner
Office of Petitions
Office of the Deputy Commissioner
for Patent Examination Policy

This Page Is Inserted by IFW Operations
and is not a part of the Official Record

BEST AVAILABLE IMAGES

Defective images within this document are accurate representations of the original documents submitted by the applicant.

Defects in the images may include (but are not limited to):

- BLACK BORDERS
- TEXT CUT OFF AT TOP, BOTTOM OR SIDES
- FADED TEXT
- ILLEGIBLE TEXT
- SKEWED/SLANTED IMAGES
- COLORED PHOTOS
- BLACK OR VERY BLACK AND WHITE DARK PHOTOS
- GRAY SCALE DOCUMENTS

IMAGES ARE BEST AVAILABLE COPY.

As rescanning documents *will not* correct images, please do not report the images to the Image Problem Mailbox.

UNITED STATES PATENT AND TRADEMARK OFFICE

COMMISSIONER FOR PATENTS
UNITED STATES PATENT AND TRADEMARK OFFICE
P.O. BOX 1450
ALEXANDRIA, VA 22313-1450
WWW.USPTO.GOV

OIPE
APR 2 6 2004
PATENT & TRADEMARK OFFICE

APR 1 2 2004
SIERRA PATENT GROUP LTD

KENNETH D'ALESSANDRO
SIERRA PATENT GROUP, LTD.
P O BOX 6149
STATELINE, NV 89449

Due 5/7/04
CPL

COPY MAILED
APR 0 7 2004
OFFICE OF PETITIONS

In re Application of :
Merrill :
Application No. 09/884,863 : DECISION ON PETITION
Filed: June 18, 2001 :
Attorney Docket No. FOV-053 :

This is in response to the communication entitled "Request for Refund of Petition Fee," filed June 2, 2003, which is being treated as (1) a petition under 37 CFR 1.181 for refund, and (2) a petition under 37 CFR 1.183 seeking waiver of 37 CFR 1.4(b).

The petition considered under 37 CFR 1.181 for a refund is **dismissed**.

The petition considered under 37 CFR 1.183 as a request for waiver of the rules is **dismissed.**

THE UNFORTUNATE REFUND OF THE PETITION FEE IN SEPTEMBER 2003 IS VACATED AS PERFORMED IN ERROR. PETITIONER IS GIVEN A NON EXTENDABLE TIME PERIOD OF *ONE MONTH* TO RESUBMIT THE $650 PETITION FEE. FAILURE TO TIMELY RESUBMIT THE $1300 PETITION FEE WILL RESULT IN VACATUR OF THE DECISION REVIVING THIS APPLICATION MAILED MAY 21, 2003.

BACKGROUND

The above-identified application papers were deposited on June 18, 2001. With the filing, applicant included a "Request for Nonpublication Pursuant to 37 C.F.R. § 1.213," which reads:

> Applicant hereby requests that this application not be published under 35 U.S.C. § 122(b). Applicant certifies that the invention disclosed in the application has not been and will not be the subject of an application filed in another country, or under a multi-lateral agreement,

04/28/2004 AWONDAF1 00000117 09884863
01 FC:1999 1300.00 OP

OIPE JC109
APR 2 6 2004
PATENT & TRADEMARK OFFICE

Docket No.: FOV-053

UNITED STATES PATENT AND TRADEMARK OFFICE
OFFICE OF PETITIONS

Inventor: Richard B. Merrill

Application No.: 09/884,863 Filed: June 18, 2001

Patent No.: 6,727,521 To Be Issued: April 27, 2004

For: "VERTICAL COLOR FILTER DETECTOR GROUP AND ARRAY"

Certificate of Mailing

I hereby certify that this correspondence is being deposited with the United States Postal Service with sufficient postage as First Class Mail in an envelope addressed Mail Stop Petition, Commissioner for Patents, P.O. Box 1450, Alexandria, VA 22313-1450 on 4-22-04, *Signed* Carol Stanley
Carol Stanley

TRANSMITTAL LETTER

Mail Stop Petition
Commissioner for Patents
P.O. Box 1450
Alexandria, VA 22313-1450

Dear Sir or Madam:

Attached hereto for filing are the following papers:

1. Check in the amount of $1,300.00;
2. Copy of first page of Decision on Petition mailed April 7, 2004;
3. Return Postcard.

Please contact Applicant's attorney at the address, telephone or facsimile number below if there are any matters whose resolution can be expedited thereby.

Respectfully submitted,
SIERRA PATENT GROUP, LTD.

Dated:

Sierra Patent Group, Ltd.
P.O. Box 6149
Stateline, NV 89449
Telephone (775) 586-9500
Facsimile (775) 586-9550

Kenneth D'Alessandro
Reg. No.: 29,144

UNITED STATES PATENT AND TRADEMARK OFFICE

COMMISSIONER FOR PATENTS
UNITED STATES PATENT AND TRADEMARK OFFICE
WASHINGTON, DC 20231
www.uspto.gov

Paper No. 7

MAILED

APR 2 3 2002

Technology Center 2100

Mr. Ed Stabler, CFO
Infoteria Corporation
8212 Avalon Gates,
Trumbull, CT 06611

In re Application of : Y. Hirano et al.
Application No. 09/884,876
Filed: June 18, 2001
For: ID INFORMATION MANAGEMENT SYSTEM AND METHOD

DECISION ON REQUEST TO WITHRAW AS ATTORNEY OR AGENT

This is a decision on the Request To Withdraw from Representation filed February 21, 2002 under 37 C.F.R. § 1.36.

A grantable request to withdraw as attorney of record should indicate thereon the present mailing addresses of the attorney(s) who is/are withdrawing from the record and of the applicant. The request for withdrawal must be signed by every attorney seeking to withdraw or contain a clear indication that one attorney is signing on behalf of another/others. A request to withdraw will not be approved unless at least 30 (thirty) days would remain between the date of approval and the later of the expiration date of a time to file a response or the expiration date of the maximum time period which can be extended under 37 C.F.R. §1. 136(a). The effective date of withdrawal being the date of decision and not the date of request. See M.P.E.P. § 402.06. 37 C.F.R. § 1.36 further requires that the applicant or patent owner be notified of the withdrawal of the attorney or agent.

The request is **GRANTED**.

All future communications from the Office will be directed to the above-listed address until otherwise notified by applicant. This correspondence address is provided by the withdrawing attorney(s). Applicant is reminded of the obligation to promptly notify the Patent and Trademark Office (Office) of any change in correspondence address to ensure receipt of all communications from the Office.

Robert A. Weinhardt
Special Program Examiner
Technology Center 2100
Computer Architecture, Software,
& Electronic Commerce
703-305-9780

CC: Pillsbury Winthrop LLP
Intellectual Property Group
Calendar/Docket Dept.
50 Fremont Street
San Francisco CA 94105

UNITED STATES PATENT AND TRADEMARK OFFICE

Commissioner for Patents
United States Patent and Trademark Office
P.O. Box 1450
Alexandria, VA 22313-1450
www.uspto.gov

COPY MAILED

SEP 0 4 2007

OFFICE OF PETITIONS

FOLEY AND LARDNER LLP
SUITE 500
3000 K STREET NW
WASHINGTON DC 20007

In re	:
Te Riele, et al.	: DECISION ON REQUEST
Application No. 09/884,877	: FOR RECONSIDERATION OF
Filed: June 20, 2001	: PATENT TERM ADJUSTMENT
Patent No. 7,199,280	: UNDER 37 C.F.R. §1.705(d)
Issued: April 3, 2007	:

This letter is in response to the "REQUEST FOR RECONSIDERATION OF PATENT TERM ADJUSTMENT UNDER 37 C.F.R. 1.705(d)", filed June 4, 2007, requesting correction of the patent term adjustment (PTA) indicated on the patent from zero (0) days to two hundred three (203) days.

The request for reconsideration of the patent term adjustment indicated on the patent is **DISMISSED**.

Applicants are given **two (2) months** from the mail date of this decision to respond to this decision. No extensions of time will be granted under § 1.136.

On April 3, 2007, the above-identified application matured into U.S. Patent No. 7,199,280. The patent issued with a Patent Term Adjustment of zero (0) days (597 days of PTO delay and 608 days of applicant delay).

The Office determined a patent term adjustment of zero (0) days based on PTO delay of forty-two (42) days pursuant to 35 U.S.C. 154(b)(1)(A)(i) and 37 C.F.R. § 1.703(a)(1), twenty (20) days pursuant to 35 U.S.C. 154(b)(1)(A)(iv) and 37 C.F.R. § 1.703(a)(6), and five hundred thirty-five (535) days pursuant to 35 U.S.C. 154(b)(1)(B)(i) and 37 C.F.R. 1.703(b)(1), reduced by Applicant delay of one hundred seventy-three (173), ninety-two (92), thirty-five (35), one hundred twenty-six (126), ninety (90), and ninety-two (92) days pursuant to 35 U.S.C. 154(b)(2)(C)(ii) and 37 C.F.R. § 1.704(b).

Patentees assert that they should not have been assessed Applicant delay of one hundred seventy-three (173) days for their late response to a July 24, 2001 Notice to File Missing Parts, but rather should have only been assessed delay of one (1) day.

However, Patentee's argument with respect to this instance of Applicant delay is untimely filed. PALM records indicate that the issue fee payment was received in the Office on November 14, 2006. No filing of an application for patent term adjustment preceded the payment of the issue fee. The period for filing an application for patent term adjustment requesting reconsideration of the initial determination of patent term adjustment at the time of mailing of the notice of allowance ended November 14, 2006. Accordingly, it is appropriate to dismiss this argument as untimely filed.

Patentees also argue that the delay pursuant to 37 C.F.R. § 1.703(b)(1) should have been five hundred seventy-seven (577) days, not five hundred thirty-five (535) days. A review of the record indicates that the application was filed on June 20, 2001, and did not issue until April 3, 2007. Accordingly, there was a PTO delay of one thousand seventeen (1017) days in excess of three years. However, Applicants filed an RCE on January 18, 2006. Accordingly, under 37 C.F.R. § 1.703(b)(1), the number of days between January 18, 2006 to April 3, 2007, or four hundred forty (440) days, shall not be counted in determining the delay in excess of three years. In view thereof, PTO delay was five hundred seventy-seven (577) days. However, as the 577 days overlap with the 62 days of PTO delay already accorded (42+20[1]), this delay does not result in any additional patent term adjustment. See 35 U.S.C. 154(b)(1)(B), 35 U.S.C. 154(b)(2)(A),

[1] It is noted that a period of 535 days, which only considers the overlap of 42 days, was entered before the entry of the 20 days of adjustment. The 535 days has been corrected to 515 days considering the additional 20 days of overlap.

and 37 C.F.R. § 1.703(f). See also Revision of Patent Term Extension and Patent Term Adjustment Provisions; Final Rule, 69 Fed. Reg. 21704 (April 22, 2004). Accordingly, the proper PTO delay due to the Office's failure to issue the patent within three years is five hundred fifteen (515) days.

In view thereof, the correct determination of PTA at the time of issuance is zero (0) days (577 (515+42+20) days of PTO delay, reduced by 608 days of applicant delay).

Receipt of the $200 fee set forth in 37 C.F.R. § 1.18(e) is acknowledged.

Telephone inquiries specific to this matter should be directed to Cliff Congo, Petitions Attorney, at (571)272-3207.

Nancy Johnson
Senior Petitions Attorney
Office of Petitions

UNITED STATES PATENT AND TRADEMARK OFFICE

Commissioner for Patents
United States Patent and Trademark Office
P.O. Box 1450
Alexandria, VA 22313-1450
www.uspto.gov

Paper No.

FOLEY AND LARDNER LLP
SUITE 500
3000 K STREET NW
WASHINGTON DC 20007

MAILED

MAY 10 2010

OFFICE OF PETITIONS

In re Patent No. 7,199,280	:	
Te Riele et al.	:	DECISION ON
Application No. 09/884,877	:	REQUEST FOR
Issue Date: 04/03/2007	:	RECONSIDERATION OF
Filed: 06/20/2001	:	PATENT TERM ADJUSTMENT
Attorney Docket No.	:	UNDER 37 CFR 1.705
033730-0102	:	

This is in response to the REQUEST FOR RECONSIDERATION OF DECISION ON PATENT TERM ADJUSTMENT PETITION UNDER 37 C.F.R. 1.705(d), filed on November 5, 2007.

The request for reconsideration of patent term adjustment is **GRANTED to the extent indicated.**

The patent term adjustment has been reconsidered, and for the following reasons, the revised PTA is 0 days.

The Office has updated the PALM and PAIR screens to reflect that the correct Patent Term Adjustment (PTA) at the time of mailing of the Notice of Allowance is zero (0) days. A copy of the updated PALM screen, showing the correct determination, is enclosed.

Patentees argue that the initial request filed on June 4, 2007 should not have been dismissed as untimely with respect to the 173 day period of reduction for applicant delay in responding to the Notice to File Missing Parts mailed on December 26, 2001.

It is noted that although the initial request for reconsideration asserted that there is an error in the patent term adjustment, patentees indicated that the determination of zero days patent term adjustment pursuant as of the mailing of the notice of allowance is correct. Accordingly, it is agreed that under the circumstances of this case, the request of June 4, 2007, was timely filed.

It is agreed that 1 day of reduction for applicant delay for the filing of a reply on April 15, 2002, three (3) months and one (1) day after the mailing of the Notice to Comply mailed on January 14, 2002, is proper. This period of reduction has been entered.[1]

With regard to the Notice to File Missing Parts mailed on July 24, 2001, a response was filed on December 26, 2001, three months and 63 days after the mailing of the Notice. Therefore, the proper period of reduction for applicant delay is 63 days, not 173 days. The 173 day period has been removed[2] and a 63 day period of reduction has been entered.[3]

As to the "B" delay, the period from the filing date of the request for continued examination (RCE) to the issue date of the patent is not included in the "B" delay period, the over three year period begins on June 21, 2004, and ends on January 17, 2006, the day before the RCE was filed, or 576 days. See 35 U.S.C. 154(b)(1)(B)(i). This period does not include the number of days in the period beginning on the date a notice of appeal was filed, June 23, 2005, and ending on the day before the RCE was filed, or 209 days. Accordingly, the period of "B" delay is 367 (576 - 209) days. The 535 day period of adjustment entered at issuance for B delay is being removed and a period of 367 days is being entered.[4]

In view thereof, the revised patent term adjustment is zero days. Given that the error in calculation of patent term adjustment would not change the patent term adjustment indicated on the patent, it is determined that no further action is required by the Office.

---

[1] See Line 109 of the attached PALM PTA Calculation.
[2] See Line 106 of the attached PALM PTA Calculation.
[3] See Line 112 of the attached PALM PTA Calculation.
[4] See Lines 95.5, 115, and 116 of the attached PALM PTA Calculation.

The Office acknowledges submission of the $200.00 fee set forth in 37 CFR 1.18(e). No additional fees are required.

Telephone inquiries specific to this matter should be directed to Senior Petitions Attorney Douglas I. Wood, at (571) 272-3231.

Anthony Knight
Director
Office of Petitions

Encl: Revised PALM Determination

PALM INTRANET

Day : Friday
Date: 5/7/2010
Time: 10:24:26

PTA Calculations for Application: 09/884877			
Application Filing Date:	06/20/2001	PTO Delay (PTO):	597
Issue Date of Patent:	04/03/2007	Three Years:	0
Pre-Issue Petitions:	0	Applicant Delay (APPL):	608
Post-Issue Petitions:	0	Total PTA (days):	0
PTO Delay Adjustment:	-57		

File Contents History

Number	Date	Contents Description	PTO	APPL	START
116	05/07/2010	ADJUSTMENT OF PTA CALCULATION BY PTO	369		
115	05/07/2010	ADJUSTMENT OF PTA CALCULATION BY PTO		535	
114	09/16/2008	ADJUSTMENT OF PTA CALCULATION BY PTO	535		
113	09/16/2008	ADJUSTMENT OF PTA CALCULATION BY PTO		557	
112	09/16/2008	ADJUSTMENT OF PTA CALCULATION BY PTO		63	
111	09/03/2008	ADJUSTMENT OF PTA CALCULATION BY PTO	557		
110	09/03/2008	ADJUSTMENT OF PTA CALCULATION BY PTO		515	
109	09/03/2008	ADJUSTMENT OF PTA CALCULATION BY PTO		1	
108	09/03/2008	ADJUSTMENT OF PTA CALCULATION BY PTO	63		
107	09/03/2008	ADJUSTMENT OF PTA CALCULATION BY PTO		63	
106	09/03/2008	ADJUSTMENT OF PTA CALCULATION BY PTO	173		
102	08/22/2007	ADJUSTMENT OF PTA CALCULATION BY PTO	515		
101	08/22/2007	ADJUSTMENT OF PTA CALCULATION BY PTO		535	
95.5	03/14/2007	PTA 36 MONTHS	535		
95	04/03/2007	PATENT ISSUE DATE USED IN PTA CALCULATION	20		83
94	03/08/2007	EXPORT TO FINAL DATA CAPTURE			
93	03/06/2007	FINISHED INITIAL DATA CAPTURE			
92	03/07/2007	DISPATCH TO FDC			
91	02/15/2007	WORKFLOW - QUERY REQUEST - FINISH			
90	01/12/2007	MAIL EXAMINER'S AMENDMENT			
89	01/08/2007	EXAMINER'S AMENDMENT COMMUNICATION			
88	01/04/2007	CASE DOCKETED TO EXAMINER IN GAU			
87	12/26/2006	CASE DOCKETED TO EXAMINER IN GAU			
86	11/08/2006	PUBS CASE REMAND TO TC			
85	11/21/2006	WORKFLOW - QUERY REQUEST - BEGIN			
84	11/20/2006	APPLICATION IS CONSIDERED READY FOR			

		ISSUE			
83	11/14/2006	ISSUE FEE PAYMENT VERIFIED			
82	11/14/2006	ISSUE FEE PAYMENT RECEIVED			
81	11/03/2006	WORKFLOW - QUERY REQUEST - FINISH			
80	10/24/2006	TC RETURN TO PUBS			
79	10/11/2006	PUBS CASE REMAND TO TC			
78	10/16/2006	WORKFLOW - QUERY REQUEST - BEGIN			
77	09/21/2006	SEQUENCE FORWARDED TO PUBS ON TAPE			
76	09/15/2006	EXPORT TO INITIAL DATA CAPTURE			
75	09/08/2006	MAIL NOTICE OF ALLOWANCE			
74	09/07/2006	ISSUE REVISION COMPLETED			
73	09/07/2006	NOTICE OF ALLOWANCE DATA VERIFICATION COMPLETED			
72	09/07/2006	CASE DOCKETED TO EXAMINER IN GAU			
71	07/20/2006	ALLOWED CASE RETURNED TO THE EXAMINER FOR CLERICAL PROCESSING			
70	07/19/2006	NOTICE OF ALLOWABILITY			
68	06/20/2001	INFORMATION DISCLOSURE STATEMENT CONSIDERED			
67	05/15/2006	DATE FORWARDED TO EXAMINER			
66	05/08/2006	RESPONSE AFTER EX PARTE QUAYLE ACTION			
65	06/20/2001	INFORMATION DISCLOSURE STATEMENT (IDS) FILED			
64	04/10/2006	MAIL EX PARTE QUAYLE ACTION (PTOL - 326)			
63	04/03/2006	EX PARTE QUAYLE ACTION			
62	01/27/2006	DATE FORWARDED TO EXAMINER			
61	01/18/2006	AMENDMENT SUBMITTED/ENTERED WITH FILING OF CPA/RCE			
60	01/27/2006	DATE FORWARDED TO EXAMINER			
59	01/18/2006	REQUEST FOR CONTINUED EXAMINATION (RCE)			
58	01/27/2006	DISPOSAL FOR A RCE / CPA / R129			
57	01/18/2006	REQUEST FOR EXTENSION OF TIME - GRANTED			
56	01/18/2006	WORKFLOW - REQUEST FOR RCE - BEGIN			
55	06/23/2005	NOTICE OF APPEAL FILED		92	46
54	06/23/2005	REQUEST FOR EXTENSION OF TIME - GRANTED			
53	06/23/2005	MAIL ADVISORY ACTION (PTOL - 303)			

52	06/22/2005	ADVISORY ACTION (PTOL-303)			
51	05/23/2005	MAIL ADVISORY ACTION (PTOL - 303)			
50	05/19/2005	ADVISORY ACTION (PTOL-303)			
49	04/27/2005	DATE FORWARDED TO EXAMINER			
48	04/22/2005	AMENDMENT AFTER FINAL REJECTION			
47	04/22/2005	REQUEST FOR EXTENSION OF TIME - GRANTED			
46	12/23/2004	MAIL FINAL REJECTION (PTOL - 326)			
45	12/22/2004	FINAL REJECTION			
44	10/20/2004	DATE FORWARDED TO EXAMINER			
43	10/14/2004	RESPONSE AFTER NON-FINAL ACTION		90	40
42	10/14/2004	REQUEST FOR EXTENSION OF TIME - GRANTED			
41	10/14/2004	WORKFLOW INCOMING AMENDMENT IFW			
40	04/16/2004	MAIL NON-FINAL REJECTION			
39	04/15/2004	NON-FINAL REJECTION			
38	02/11/2004	IFW AMENDED CASE PROCESSING COMPLETE			
37	02/11/2004	DATE FORWARDED TO EXAMINER			
36	01/12/2004	RESPONSE AFTER NON-FINAL ACTION		126	29
35	01/12/2004	REQUEST FOR EXTENSION OF TIME - GRANTED			
34	01/02/2004	MAIL NOTICE OF INFORMAL OR NON-RESPONSIVE AMENDMENT			
33	10/07/2003	OATH OR DECLARATION FILED (INCLUDING SUPPLEMENTAL)			
32	10/27/2003	DATE FORWARDED TO EXAMINER			
31	10/07/2003	SUPPLEMENTAL RESPONSE			
30	09/22/2003	DATE FORWARDED TO EXAMINER			
29.1	09/08/2003	INFORMAL OR NON-RESPONSIVE AMENDMENT AFTER EXAMINER ACTION			
29	09/08/2003	RESPONSE AFTER NON-FINAL ACTION		35	26
28	08/13/2003	MAIL NOTICE OF INFORMAL OR NON-RESPONSIVE AMENDMENT			
27	08/12/2003	DATE FORWARDED TO EXAMINER			
26.1	08/04/2003	INFORMAL OR NON-RESPONSIVE AMENDMENT AFTER EXAMINER ACTION			
26	08/04/2003	RESPONSE AFTER NON-FINAL ACTION		92	24
25	08/04/2003	REQUEST FOR EXTENSION OF TIME - GRANTED			
24	02/04/2003	MAIL NON-FINAL REJECTION			

23	02/03/2003	NON-FINAL REJECTION			
22	11/12/2002	DATE FORWARDED TO EXAMINER			
21	11/06/2002	RESPONSE TO ELECTION / RESTRICTION FILED			
20	10/01/2002	MAIL RESTRICTION REQUIREMENT	42		-1
19	09/30/2002	REQUIREMENT FOR RESTRICTION / ELECTION			
18	09/06/2002	CASE DOCKETED TO EXAMINER IN GAU			
17	08/20/2002	CASE DOCKETED TO EXAMINER IN GAU			
16	06/06/2002	X-PRE-LEGAL COMPLETE NEW CASE			
15	04/15/2002	PRELIMINARY AMENDMENT			
14	12/26/2001	PRELIMINARY AMENDMENT			
13	06/20/2001	PRELIMINARY AMENDMENT			
12	05/29/2002	APPLICATION DISPATCHED FROM OIPE			
11	05/09/2002	APPLICATION IS NOW COMPLETE			
10	04/15/2002	ADDITIONAL APPLICATION FILING FEES		173	4
9	04/15/2002	CRF DISK HAS BEEN RECEIVED BY PREEXAM / GROUP / PCT			
8	04/15/2002	A SET OF SYMBOLS AND PROCEDURES, PROVIDED TO THE PTO ON A SET OF COMPUTER LISTINGS, THAT DESCRIBE IN			
7	05/02/2002	CRF IS GOOD TECHNICALLY / ENTERED INTO DATABASE			
6	01/14/2002	SEQUENCE ERRORS			
5	01/11/2002	PRE-EXAM OFFICE ACTION WITHDRAWN			
4	07/24/2001	NOTICE MAILED--APPLICATION INCOMPLETE--FILING DATE ASSIGNED			
3	07/23/2001	CORRESPONDENCE ADDRESS CHANGE			
2	06/28/2001	IFW SCAN & PACR AUTO SECURITY REVIEW			
1	06/20/2001	INITIAL EXAM TEAM NN			

Search Another: Application# [ ] Search

EXPLANATION OF PTA CALCULATION

EXPLANATION OF PTE CALCULATION

To go back, right click here and select Back. To go forward, right click here and select Forward. To refresh, right click here and select Refresh.

Back to OASIS | Home page

SPE RESPONSE FOR CERTIFICATE OF CORRECTION

Paper No.: _____

DATE : January 12, 2007

TO SPE OF : ART UNIT 2622

SUBJECT : Request for Certificate of Correction for Appl. No.: 09/884897 Patent No.: 7,057,666 B2

Please respond to this request for a certificate of correction within 7 days.

Please review the requested changes/corrections as shown in the **COCIN** document(s) in the IFW application image. No new matter should be introduced, nor should the scope or meaning of the claims be changed.

Please complete the response (see below) and forward the completed response to scanning using document code **COCX**.

BEST AVAILABLE COPY

Elisha Evans
Certificates of Correction Branch
703-308-9390 ext. 110

Thank You For Your Assistance

The request for issuing the above-identified correction(s) is hereby:
Note your decision on the appropriate box.

- [X] **Approved** — **All** changes apply.
- [ ] **Approved in Part** — Specify below which changes **do not** apply.
- [ ] **Denied** — State the reasons for denial below.

Comments: _____

DAVID OMETZ
SUPERVISORY PATENT EXAMINER
SPE

2622
Art Unit

UNITED STATES PATENT AND TRADEMARK OFFICE

Commissioner for Patents
United States Patent and Trademark Office
P.O. Box 1450
Alexandria, VA 22313-1450
www.uspto.gov

BLACK LOWE & GRAHAM, PLLC
701 FIFTH AVENUE
SUITE 4800
SEATTLE WA 98104

COPY MAILED

JAN 17 2008

OFFICE OF PETITIONS

In re Application of :
Odinak :
Application No. 09/884,902 :
Filed: June 18, 2001 :
Attorney Docket No. INTL-1-1015 :
For: METHOD AND DEVICE TO DISTINGUISH BETWEEN VOICE CONVERSATION AND AUTOMATED SPEECH RECOGNITION

ON PETITION

This is a decision on the petition under 37 CFR 1.137(b), filed on October 31, 2007 to revive the above-identified application.

This application became abandoned for failure to properly respond to the final Office action mailed March 2, 2007, which set an extendable three month period for reply. Applicant obtained a three month extension of time. However, both amendments after final filed in this application failed to place the application in *prima facie* condition for allowance. Accordingly, this application became abandoned on September 3, 2007.

Applicant has submitted a RCE and required $405.00 fee and amendment in reply to the March 2, 2007 final Office action, a proper statement of the unintentional nature of the delay in responding to the March 2, 2007 final Office action, and the $770.00 petition fee.

The petition is **GRANTED**.

After the mailing of this decision the application will be forwarded to Technology Center AU 2626 for consideration of the RCE and amendment filed on October 31, 2007.

Telephone inquiries pertaining to this decision may be directed to the undersigned at (571) 272-3230.

Shirene Willis Brantley

Shirene Willis Brantley
Senior Petitions Attorney
Office of Petitions

UNITED STATES PATENT AND TRADEMARK OFFICE

COMMISSIONER FOR PATENTS
UNITED STATES PATENT AND TRADEMARK OFFICE
P.O. BOX 1450
ALEXANDRIA, VA 22313-1450
www.uspto.gov

Paper No.

CROWELL & MORING LLP
INTELLECTUAL PROPERTY GROUP
P.O. BOX 14300
WASHINGTON DC 20044-4300

COPY MAILED

AUG 27 2007

OFFICE OF PETITIONS

In re Application of	:	
Marco Peretti	:	DECISION ON APPLICATION
Application No. 09/884,921	:	FOR
Filed: June 21, 2001	:	PATENT TERM ADJUSTMENT
Atty Docket No. 702265.0007	:	

This is a decision on the "REQUEST FOR RECONSIDERATION OF PATENT TERM ADJUSTMENT IN NOTICE OF ALLOWANCE UNDER 37 C.F.R. § 1.705(b)," filed June 12, 2007. Applicants request that the initial determination of patent term adjustment under 35 U.S.C. 154(b) be corrected from seven hundred fifty-six (756) days to eight hundred seventy-eight (878) days.

The application for patent term adjustment is **GRANTED**.

The Office has updated the PAIR screen to reflect that the correct Patent Term Adjustment (PTA) determination at the time of the mailing of the notice of allowance is EIGHT HUNDRED SEVENTY-EIGHT **(878)** days. A copy of the updated PAIR screen, showing the correct determination, is enclosed.

On May 17, 2007, the Office mailed the Determination of Patent Term Adjustment under 35 U.S.C. 154(b) in the above-identified application. The Notice stated that the patent term adjustment (PTA) to date is 756 days. On June 12, 2007, applicant timely submitted the instant application for patent term adjustment[1]. Applicant states that a Reply to the non-final Office action mailed October 19, 2005 was filed by facsimile on January 19,

[1] PALM records indicate that the Issue Payment was filed on August 17, 2007.

2006 and resubmitted on April 10, 2006. Accordingly, applicant argues that the periods of adjustment and reduction should be based on the response filing date of January 19, 2006. Thus, the period of adjustment would be 41 days and the period of reduction would be 0 days, not 81 days.

Applicant states that this application is not subject to a terminal disclaimer.

Applicant's documentation on application for patent term adjustment (and of record as submitted April 10, 2006) supports a conclusion that the reply should be treated as filed on January 19, 2006, not April 10, 2006. The examiner accepted the reply as timely filed. As the reply to the Office action mailed October 19, 2005, was sent to the Office by facsimile on January 19, 2006, this was within the three-month period set in 37 CFR 1.704(b). Accordingly, no reduction for applicant delay is warranted.

Further, pursuant to 37 CFR 1.702(a)(2) and 1.703(a)(3), a period of adjustment of 41 days is being entered for the Office taking more than four months, until June 29, 2006, to mail a response to the reply filed January 19, 2006.

It is noted that the Reply filed January 19, 2006 was not faxed to the official central facsimile number. Applicant is advised that a Reply sent to an improper facsimile number may in the future be considered a failure to engage in reasonable efforts to conclude processing or examination and/or may not give rise to an Office delay for failing to mail a response within 4 months.

In view thereof, the correct determination of patent term adjustment at the time of the mailing of the notice of allowance is 878 days.

Receipt of the $200.00 fee set forth in 37 CFR 1.18(e) is acknowledged. No additional fees are required.

The application is being forwarded to the Office of Patent Publication for issuance of the patent. The patent term adjustment indicated on the patent will include any additional patent term adjustment accrued for Office delay in issuing the patent after payment of the issue fee and all outstanding requirements having been met.

Telephone inquiries specific to this matter should be directed to the undersigned at (571) 272-3219.

Nancy Johnson
Senior Petitions Attorney
Office of Petitions

Enclosure: Copy of REVISED PAIR Screen

Day : Thursday
Date: 8/23/2007

PALM INTRANET

Time: 20:48:05

PTA Calculations for Application: 09/884921			
Application Filing Date:	06/21/2001	PTO Delay (PTO):	944
Issue Date of Patent:		Three Years:	0
Pre-Issue Petitions:	0	Applicant Delay (APPL):	188
Post-Issue Petitions:	0	Total PTA (days):	878
PTO Delay Adjustment:	122		

File Contents History

Number	Date	Contents Description	PTO	APPL	START
56	08/23/2007	ADJUSTMENT OF PTA CALCULATION BY PTO	41		
55	08/23/2007	ADJUSTMENT OF PTA CALCULATION BY PTO	81		
47	05/17/2007	MAIL NOTICE OF ALLOWANCE			
46	05/17/2007	MAIL EXAMINER'S AMENDMENT			
45	05/14/2007	ISSUE REVISION COMPLETED			
44	05/14/2007	NOTICE OF ALLOWANCE DATA VERIFICATION COMPLETED			
43	05/14/2007	CASE DOCKETED TO EXAMINER IN GAU			
42	05/10/2007	ALLOWED CASE RETURNED TO THE EXAMINER FOR CLERICAL PROCESSING			
41	05/10/2007	DOCUMENT VERIFICATION			
40	05/10/2007	EXAMINER'S AMENDMENT COMMUNICATION			
39	05/10/2007	NOTICE OF ALLOWABILITY			
38	05/09/2007	EXAMINER INTERVIEW SUMMARY RECORD (PTOL - 413)			
37	05/03/2007	DATE FORWARDED TO EXAMINER			
36	04/26/2007	RESPONSE AFTER NON-FINAL ACTION		58	33
35	04/26/2007	REQUEST FOR EXTENSION OF TIME - GRANTED			
34	11/27/2006	MAIL EXAMINER INTERVIEW SUMMARY (PTOL - 413)			
33	11/27/2006	MAIL NON-FINAL REJECTION			
32	11/22/2006	NON-FINAL REJECTION			
31	11/07/2006	REQUEST FOR REFUND			
30	10/25/2006	DATE FORWARDED TO EXAMINER			
29	10/18/2006	AMENDMENT AFTER FINAL REJECTION		19	26
28	10/18/2006	REQUEST FOR EXTENSION OF TIME - GRANTED			

27	10/05/2006	EXAMINER INTERVIEW SUMMARY RECORD (PTOL - 413)			
26	06/29/2006	MAIL FINAL REJECTION (PTOL - 326)			
25	06/26/2006	FINAL REJECTION			
24	04/20/2006	DATE FORWARDED TO EXAMINER			
23	04/10/2006	RESPONSE AFTER NON-FINAL ACTION		81	22
22	10/19/2005	MAIL NON-FINAL REJECTION			
21	10/17/2005	NON-FINAL REJECTION			
20	08/05/2005	DATE FORWARDED TO EXAMINER			
19	07/22/2005	RESPONSE AFTER NON-FINAL ACTION		30	16
18	07/22/2005	REQUEST FOR EXTENSION OF TIME - GRANTED			
17	07/21/2005	CORRESPONDENCE ADDRESS CHANGE			
16	03/22/2005	MAIL NON-FINAL REJECTION	944		-1
15	03/16/2005	NON-FINAL REJECTION			
14	10/21/2004	CASE DOCKETED TO EXAMINER IN GAU			
13	08/23/2004	CASE DOCKETED TO EXAMINER IN GAU			
12	08/04/2004	IFW TSS PROCESSING BY TECH CENTER COMPLETE			
11	07/03/2003	CASE DOCKETED TO EXAMINER IN GAU			
10	06/10/2003	CORRESPONDENCE ADDRESS CHANGE			
9	09/29/2002	CASE DOCKETED TO EXAMINER IN GAU			
8	03/02/2002	CASE DOCKETED TO EXAMINER IN GAU			
7	10/26/2001	CASE DOCKETED TO EXAMINER IN GAU			
6	10/23/2001	APPLICATION DISPATCHED FROM OIPE			
5	10/22/2001	APPLICATION IS NOW COMPLETE			
4	08/13/2001	NOTICE MAILED--APPLICATION INCOMPLETE--FILING DATE ASSIGNED			
3	08/10/2001	CORRESPONDENCE ADDRESS CHANGE			
2	06/29/2001	IFW SCAN & PACR AUTO SECURITY REVIEW			
1	06/21/2001	INITIAL EXAM TEAM NN			

Search Another: Application# Search

EXPLANATION OF PTA CALCULATION

EXPLANATION OF PTE CALCULATION

To go back use Back button on your browser toolbar.

UNITED STATES PATENT AND TRADEMARK OFFICE

COMMISSIONER FOR PATENTS
UNITED STATES PATENT AND TRADEMARK OFFICE
P.O. BOX 1450
ALEXANDRIA, VA 22313-1450
www.uspto.gov

Paper No. 7

McDERMOTT, WILL & EMERY
600 13th Street, N.W.
Washington DC 20005-3096

COPY MAILED

JUN 1 7 2003

OFFICE OF PETITIONS

In re Application of
Gordon Schmeisser
Application No. 09/884,928
Filed: June 21, 2001
Attorney Docket No. 10473-744
Title: DETACHABLE CARTRIDGE UNIT AND AUXILIARY UNIT FOR FUNCTION EXPANSION OF A DATA PROCESSING SYSTEM

DECISION ON PETITION
UNDER 37 C.F.R. §1.137(f)

This is a decision on the petition filed on May 21, 2003, pursuant to 37 C.F.R. §1.137(f), to revive the above-identified application.

A grantable petition pursuant to 37 CFR 1.137(f) must be accompanied by:

(1) Notification of the filing of an application in a foreign country or under a multinational treaty that requires 18 month publication[1];
(2) The petition fee as set forth in 37 C.F.R. § 1.17(m), and;
(3) A statement that the entire delay in filing the notice from the date that the notice was due under 35 U.S.C. §122(b)(2)(B)(iii) until the date the notice was filed was unintentional. The Commissioner may require additional information where there is a question whether the delay was unintentional.

Petitioner states that the instant nonprovisional application is the subject of an application filed in either a foreign country or an international application on May 15, 2002. However, the United States Patent and Trademark Office was unintentionally not notified of this filing within 45 days subsequent to the filing of the subject application in a foreign country.

1 See PTO/SB/36 and paragraph on PTO/SB/64a for further information. Both may be downloaded at http://www.uspto.gov/web/forms/index.html.

In view of the above, this application became abandoned pursuant to 35 U.S.C. §1.22(b)(2)(B)(iii) and 37 C.F.R. §1.213(c) for failure to timely notify the Office of the filing of an application in a foreign country, or under a multilateral international agreement, that requires publication of applications 18 months after filing.

The petition is **GRANTED**.

Petitioner has submitted the notification of an international filing, paid the petition fee (which has been charged to petitioner's Deposit Account, as authorized in the petition), and has made the proper statement of unintentional delay.

The instant petition has been found to be in compliance with 37 C.F.R. §1.137(f). Accordingly, the failure to timely notify the Office of a foreign or international filing within 45 days after the date of filing of such foreign or international application as provided by 35 U.S.C. §122(b)(2)(B)(iii) and 37 C.F.R. §1.213(c) is accepted as having been unintentionally delayed.

The previous Request and Certification under 35 U.S.C. §122(b)(2)(B)(i), filed with the original application papers, has been rescinded. A Notice Regarding Rescission of Nonpublication Request which sets forth the projected publication date of September 25, 2003 accompanies this decision on petition.

After this decision is mailed, the application will be forwarded to Technology Center 2100 for further processing.

Telephone inquiries concerning *this decision* should be directed to the undersigned at (703) 305-0011.

Paul Shanoski

Paul Shanoski
Attorney
Office of Petitions
United States Patent and Trademark Office

UNITED STATES PATENT AND TRADEMARK OFFICE

Commissioner for Patents
United States Patent and Trademark Office
P. O. Box 1450
Alexandria, VA 22313-1450
www.uspto.gov

Paper No. 6

HAN-PING CHEN
P.O. BOX 2871
SARATOGA, CA 95070

COPY MAILED

JUL 2 4 2003

OFFICE OF PETITIONS

In re Application of :
Han-Ping Chen :
Application No. 09/884,971 :
Filed: June 21, 2001 :
Attorney Docket No. :

ON PETITION

This is a decision on the petition under 37 CFR 1.137(b), filed July 2, 2003, to revive the above-identified application.

The petition is **GRANTED**.

The above-identified application became abandoned for failure to reply in a timely manner to the non-final Office action mailed December 19, 2002, which set a shortened statutory period for reply of three (3) months. No extensions of time under the provisions of 37 CFR 1.136(a) were obtained. Accordingly, the above-identified application became abandoned on March 20, 2003.

Telephone inquiries concerning this decision should be directed to Irvin Dingle at (703) 306-5684.

The application file is being forwarded to Technology Center 2800 for further processing.

Irvin Dingle
Petitions Examiner
Office of Petitions
Office of the Deputy Commissioner
for Patent Examination Policy

UNITED STATES PATENT AND TRADEMARK OFFICE

Commissioner for Patents
United States Patent and Trademark Office
P.O. Box 1450
Alexandria, VA 22313-1450
www.uspto.gov

Paper No. 9

STAAS & HALSEY LLP
SUITE 700
1201 NEW YORK AVENUE, N.W.
WASHINGTON, DC 20005

COPY MAILED

AUG 2 5 2004

OFFICE OF PETITIONS

In re Application of :
Shiizaki et al. :
Application No. 09/885,001 :
Filed: June 21, 2001 :
Attorney Docket No. 1466.1039 :

ON PETITION

This is a decision on the petition under 37 CFR 1.137(b), filed July 1, 2004, to revive the above-identified application.

The petition is **granted.**

Facts:

A first and non-final Office action was mailed on June 19, 2003.

A request for a three month extension of time and a Notice of Appeal were filed on December 19, 2003.

The request for a three month extension of time was timely and proper. The request for a three month extension was accepted by the Office and entered.

The Notice of Appeal was improper and not entered. A Notice of Appeal may only be filed when the claims at issue have been finally rejected and/or twice rejected. The non-final Office action was not a final rejection and the Office action was the first Office action on the merits.

Since the Notice of Appeal was not entered and no other response had been filed to the non-final Office action, the application became abandoned as of December 20, 2003.

On May 19, 2004, a RCE and amendment were filed along with a request for a three month extension of time were filed. However, since the application was abandoned, neither paper was entered.

A Notice of Abandonment was mailed on June 1, 2004.

The instant petition was filed July 1, 2004, and is accompanied by an amendment in response to the non-final Office action mailed June 19, 2003.

Analysis:

The instant petition requests revival of the application. Petitioner has met the requirements to revive the above-identified application pursuant to 37 CFR 1.137(b). Therefore, the petition is granted and the application is revived.

A review of Office records indicates some of the fees which have been paid are refundable. The Notice of Appeal, the May 19, 2004 request for an extension of time, and the RCE, were not entered. Therefore, the Office will credit petitioner's deposit account with $330 for the Notice of Appeal, $770 for the RCE, and $950 for the request for an extension of time. In other words, the Office will credit $2,050 back to the deposit account.

The file is now being forwarded to Technology Center Art Unit 2674 for entry and consideration of the amendment filed on July 1, 2004.

Telephone inquiries should be directed to Petitions Attorney Steven Brantley at (703) 306-5683.

Charles Steven Brantley
Petitions Attorney
Office of Petitions

UNITED STATES PATENT AND TRADEMARK OFFICE

Commissioner for Patents
United States Patent and Trademark Office
P.O. Box 1450
Alexandria, VA 22313-1450
www.uspto.gov

COPY MAILED

OCT 1 2 2005

OFFICE OF PETITIONS

STAAS & HALSEY
SUITE 700
1201 NEW YORK AVENUE, N.W.
WASHINGTON DC 20005

In re Application of	:	
Takashi Shiizaki et al	:	
Application No. 09/885,001	:	ON PETITION
Filed: June 21, 2001	:	
Attorney Docket No. 1466.1039	:	

This is a decision on the petition, filed October 5, 2005, under 37 CFR 1.313(c)(2) to withdraw the above-identified application from issue after payment of the issue fee.

The petition is **GRANTED**.

The above-identified application is withdrawn from issue for consideration of a submission under 37 CFR 1.114 (request for continued examination). See 37 CFR 1.313(c)(2).

Petitioner is advised that the issue fee paid on August 5, 2005 in the above-identified application cannot be refunded. If, however, the above-identified application is again allowed, petitioner may request that it be applied towards the issue fee required by the new Notice of Allowance.[1]

Telephone inquiries should be directed to the undersigned at (571) 272-3208.

The examiner of Technology Center AU 2674 will consider the request for continued examination under 37 CFR 1.114.

Karen Creasy

Karen Creasy
Petitions Examiner
Office of Petitions
Office of the Deputy Commissioner
for Patent Examination Policy

---

[1] The request to apply the issue fee to the new Notice may be satisfied by completing and returning the new Issue Fee Transmittal Form PTOL-85(b), which includes the following language thereon: "Commissioner for Patents is requested to apply the Issue Fee and Publication Fee (if any) or re-apply any previously paid issue fee to the application identified above." Petitioner is advised that, whether a fee is indicated as being due or not, the Issue Fee Transmittal Form **must** be completed and timely submitted to avoid abandonment. Note the language in bold text on the first page of the Notice of Allowance and Fee(s) Due (PTOL-85).

UNITED STATES PATENT AND TRADEMARK OFFICE

COMMISSIONER FOR PATENTS
UNITED STATES PATENT AND TRADEMARK OFFICE
P.O. BOX 1450
ALEXANDRIA, VA 22313-1450
www.uspto.gov

Paper No. _____

Date : October 13, 2005

TO : Director, Office of Patent Publication

FROM : Office of the Deputy Commissioner
for Patent Examination Policy

SUBJECT : Withdrawal from Issue of

Applicant(s) :Takashi Shiizaki
Application No. :09/885,001
Filed :June 21, 2001

The above-identified application has been assigned Patent No. 6,961,030 and an issue date of November 1, 2005.

It is hereby directed that this application be withdrawn from issue at the request of the applicant.

Do not refund the issue fee.

The following erratum should be published in the Official Gazette if the above-identified application is published in the OG of November 1, 2005:

"All reference to Patent No. 6,961,030 to Takashi Shiizaki of Japan for DRIVING METHOD OF PLASMA DISPLAY PANEL AND DISPLAY DEVICE appearing in the Official Gazette of November 1, 2005 should be deleted since no patent was granted."

Karen Creasy

Karen Creasy
Petitions Examiner
Office of Petitions
Office of the Deputy Commissioner
for Patent Examination Policy

cc: Paul Harrison, MDW-4B03,(FAX-273-5468)
Deneise Boyd, MDE-3D39 (FAX-273-5124)
Mary Louise McAskill, ST-8C15 (FAX 305-4372)
Niomi Farmer, ST-8C14 (FAX-305-4372)
Mary E. Johnson (Cookie), MDE-7C71 (FAX 273-0038
Duane Davis P/OPC MDE-7D89
Tamara Greene, ST-8C13

UNITED STATES PATENT AND TRADEMARK OFFICE

COMMISSIONER FOR PATENTS
UNITED STATES PATENT AND TRADEMARK OFFICE
P.O. BOX 1450
ALEXANDRIA, VA 22313-1450
www.uspto.gov

Paper No. 11

FITZPATRICK CELLA HARPER & SCINTO
30 ROCKEFELLER PLAZA
NEW YORK, NY 10112

COPY MAILED

OCT 0 7 2003

OFFICE OF PETITIONS

In re Application of
Takashi Nojima
Application No. 09/885,013
Filed: June 21, 2001
Attorney Docket No. 35.C15470

: DECISION GRANTING PETITION
: UNDER 37 CFR 313(c)(2)

This is a decision on the petition, filed October 6, 2003, under 37 CFR 1.313(c)(2) to withdraw the above-identified application from issue after payment of the issue fee.

The petition is **GRANTED**.

The above-identified application is withdrawn from issue for consideration of a submission under 37 CFR 1.114 (request for continued examination). See 37 CFR 1.313(c)(2).

Petitioner is advised that the issue fee paid on April 2, 2003 in the above-identified application cannot be refunded. If, however, the above-identified application is again allowed, petitioner may request that it be applied towards the issue fee required by the new Notice of Allowance.[1]

Telephone inquiries should be directed to the undersigned at (703) 305-8680.

Upon receipt of the file in the Office of Petitions, the file will be forwarded to Technology Center AU 2853 for processing of the request for continued examination under 37 CFR 1.114 and for consideration of the concurrently filed amendment.

Frances Hicks
Petitions Examiner
Office of Petitions
Office of the Deputy Commissioner
for Patent Examination Policy

---

[1] The request to apply the issue fee to the new Notice may be satisfied by completing and returning the new Issue Fee Transmittal Form PTOL-85(b), which includes the following language thereon: "Commissioner for Patents is requested to apply the Issue Fee and Publication Fee (if any) or re-apply any previously paid issue fee to the application identified above." Petitioner is advised that, whether a fee is indicated as being due or not, the Issue Fee Transmittal Form **must** be completed and timely submitted to avoid abandonment. Note the language in bold text on the first page of the Notice of Allowance and Fee(s) Due (PTOL-85).

UNITED STATES PATENT AND TRADEMARK OFFICE

COMMISSIONER FOR PATENTS
UNITED STATES PATENT AND TRADEMARK OFFICE
P.O. BOX 1450
ALEXANDRIA, VA 22313-1450
www.uspto.gov

Paper No. 9

MAIL

OCT - 6 2003

DIRECTOR OFFICE
TECHNOLOGY CENTER 2600

NAIPO (NORTH AMERICA INTERNATIONAL PATENT OFFICE)
P.O. BOX 506
MERRIFIELD VA 22116

In re Application of	:	
MICHAEL CHEN	:	
Application No. 09/885,039	:	DECISION ON REQUEST TO
Filed: June 21, 2001	:	WITHDRAW AS ATTORNEY
For: **SCANNER WITH WIRELESS CONNECTIONS**	:	

This is a decision on the request to withdraw as attorney/agent of record filed on August 18, 2003.

A grantable request to withdraw as attorney/agent of record must:
(1) indicate the present mailing address of the attorney(s)/agent(s) who seek(s) to withdraw, and
(2) be signed by each attorney/agent seeking to withdraw or clearly be signed on their behalf, and
(3) be *approved* at least thirty (30) days prior to the maximum extendable period for response to any outstanding Office Action, and
(4) indicate the address to which future correspondence should be mailed.

The practitioners of record include those of Customer Number 27,765. The undersigned, Mord Michael Lewis, is not of record, since he is not listed under Customer Number 27,765.

Accordingly, the request is **DISMISSED AS MOOT**.

Future communications from the Office will continue to be directed to the above-listed address unless a change of correspondence is specifically requested.

Dwayne D. Bost
Special Program Examiner
Technology Center 2600
Communications
(703) 305-4778

SPE RESPONSE FOR CERTIFICATE OF CORRECTION

Paper No.: _____

DATE : February 9, 2006

TO SPE OF : ART UNIT 1733

SUBJECT : Request for Certificate of Correction on Patent No.: 6,972,063/Appl. 09/885092

A response is requested with respect to the accompanying request for a certificate of correction.

Please complete this form and return with file, within **7** days to:
Palm location **7580, Certificates of Correction Branch – South Tower – 9A22**
If response is for an IFW, **return to employee (named below) via PUBSCofC Team in MADRAS.**
With respect to the change(s) requested, correcting Office and/or Applicant's errors, should the patent read as shown in the certificate of correction (COCIN)? No new matter should be introduced, nor should the scope or meaning of the claims be changed.

Magdalene Talley

Thank You For Your Assistance

Certificates of Correction Branch
Tel. No. 703-308-9309 ext. 116

The request for issuing the above-identified correction(s) is hereby:
Note your decision on the appropriate box.

- ☑ **Approved** — **All** changes apply.
- ☐ **Approved in Part** — Specify below which changes **do not** apply.
- ☐ **Denied** — State the reasons for denial below.

Comments:

_____

_____

_____

_____

_____

SPE — 1733 Art Unit

UNITED STATES PATENT AND TRADEMARK OFFICE

UNITED STATES DEPARTMENT OF COMMERCE
United States Patent and Trademark Office
Address: COMMISSIONER FOR PATENTS
P.O. Box 1450
Alexandria, Virginia 22313-1450
www.uspto.gov

IBM CORPORATION
LOTUS SOFTWARE
ONE ROGERS STREET
CAMBRIDGE, MA 02142

Mail Date: 04/20/2010

Applicant	: Andrew Rouse	: DECISION ON REQUEST FOR
Patent Number	: 7616971	: RECALCULATION of PATENT
Issue Date	: 11/10/2009	: TERM ADJUSTMENT IN VIEW
Appliction No	: 09/885,151	: OF WYETH AND NOTICE OF INTENT TO
Filed	: 06/20/2001	: ISSUE CERTIFICATE OF CORRECTION
		:

The Request for Recalculation is **GRANTED** to the extent indicated.

The patent term adjustment has been determined to be **1004** days. The USPTO will *sua sponte* issue a certificate of correction reflecting the amount of PTA days determined by the recalculation.

Prior to the issuance of the certificate of correction, the USPTO will afford patentee an opportunity to be heard and request reconsideration. Accordingly, patentee has **one month or thirty (30) days**, whichever is longer, to file a request for reconsideration of this patent term adjustment calculation. See 35 U.S.C. 154(b)(3)(B)(ii) and 37 CFR 1.322(a)(4). No extensions of time will be granted under 37 CFR 1.136.

Patentee should use document code PET.OP if electronically filing a request for reconsideration of this patent term adjustment calculation. The patentee must also include the information required by 37 CFR 1.705(b)(2) and the fee required by 37 CFR 1.18(e). If patentee does not file a timely request for reconsideration of this patent term adjustment calculation including the information required by 37 CFR 1.705(b)(2) and the fee required by 37 CFR 1.18(e), the USPTO will issue a certificate of correction reflecting the PTA determination noted above.

Patentee should be aware that in order to preserve the right to review in the United States District Court for the District of Columbia of the USPTO patent term adjustment determination, patentee must ensure that he or she also take the steps required under 35 U.S.C. 154(b)(4)(A) in a timely manner. Nothing in the request for recalculation should be construed as providing an alternative time frame for commencing a civil action under 35 U.S.C. 154(b)(4)(A).

Any questions concerning this decision should be directed to the Office of Patent Legal Administration at 571-272-7702.

UNITED STATES PATENT AND TRADEMARK OFFICE

Commissioner for Patents
United States Patent and Trademark Office
P.O. Box 1450
Alexandria, VA 22313-1450
www.uspto.gov

DELPHI TECHNOLOGIES, INC.
M/C 480-410-202
P O BOX 5052
TROY, MI 48007

COPY MAILED

JUN 13 2005

OFFICE OF PETITIONS

In re Application of	:	
Sagarika A. Chavan	:	
Application No. 09/885,157	:	DECISION GRANTING PETITION
Filed: June 21, 2001	:	UNDER 37 CFR 1.137(b)
Attorney Docket No. DP-303983	:	

This is a decision on the petition under 37 CFR 1.137(b), filed September 13, 2004, to revive the above-identified application.

The petition is **GRANTED**.

This application became abandoned for failure to timely pay the issue and publication fees on or before June 7, 2004, as required by the Notice of Allowance and Fee(s) Due, mailed March 5, 2004. A Notice of Abandonment was mailed on July 8, 2004.

The petition satisfies the conditions for revival pursuant to the provisions of 37 CFR 1.137(b) in that (1) the reply in the form of the issue and publication fees; (2) the petition fee; and (3) the required statement of unintentional delay have been received. Accordingly, the issue and publication fees are accepted as having been unintentionally delayed.

Telephone inquiries concerning this decision should be directed to the undersigned at (571) 272-3218.

The matter is being referred to Publishing Division.

Frances Hicks
Petitions Examiner
Office of Petitions
Office of the Deputy Commissioner
for Patent Examination Policy

UNITED STATES PATENT AND TRADEMARK OFFICE

Commissioner for Patents
United States Patent and Trademark Office
Washington, D.C.

Paper No. 7

LARRY I. GOLDEN
SQUARE D COMPANY
1415 SOUTH ROSELLE ROAD
PALATINE, IL 60067

COPY MAILED

FEB 5 2002

OFFICE OF PETITIONS

In re Application of William W. Chen, Gary T. Jones, Jay B. Ballard and E.J. Homier Application No. 09/885,206 Filed: June 20, 2001 Title: POSITIVE TEMPERATURE COEFFICIENT RESISTIVITY PROTECTED POWER TRANSFORMER	NOTICE OF NONACCEPTANCE OF PETITION FILING

This is in response to the "Petition by Inventor Signing on Behalf of Other Named Inventor who Refused to Sign under 37 CFR §1.47(a)," filed December 26, 2001 (certificate of mailing October 16, 2001).

The above-identified application was filed on June 20, 2001, without an executed oath or declaration and naming William Chen, Gary Jones, Jay Ballard and E.J. Hormier as joint inventors. Accordingly, on August 16, 2001, a "Notice to File Missing Parts of Application" was mailed, requiring an executed oath or declaration and surcharge for its late filing. This Notice set a period for reply of two months from the mailing date of the notice, to October 16, 2001.

A response was timely filed including a cover transmittal signed by patent attorney Golden, a petition under §1.47 signed by inventor Jones, and the supporting affidavit of attorney Golden. Application for patent may be made by all of the inventors or the assignee of the entire interest. Thus, papers filed in an application, including petitions, must be signed by all of the inventors, the owner of the entire interest, or a registered patent attorney or agent. See 37 C.F.R. 1.33(b).

As the instant petition is only signed by inventor Jones, it cannot be accepted. For consideration of status under §1.47, a properly executed petition is required.

Applicants are given **two months** from the mailing date of this Notice to file a proper petition (or otherwise, meet the outstanding response to the "Notice to File Missing Parts"). Extensions of time under §1.136(a) are permitted. **Failure to file a timely and proper response will result in abandonment of this application.**

Further correspondence with respect to this matter should be addressed as follows:

By mail: Commissioner for Patents
Box DAC
Washington, D.C. 20231

By FAX: (703) 308-6916
Attn: Office of Petitions

By hand: Office of Petitions
2201 South Clark Place
Crystal Plaza Four, Suite 3C23
Arlington, VA

Telephone inquiries related to this communication may be directed to Petitions Attorney Nancy Johnson at 703-305-0309.

Beverly M. Flanagan
Supervisory Petitions Examiner
Office of Petitions
Office of the Deputy Commissioner
for Patent Examination Policy

UNITED STATES PATENT AND TRADEMARK OFFICE

Commissioner for Patents
United States Patent and Trademark Office
Washington, D.C. 20231
www.uspto.gov

Paper No. 9

LARRY I. GOLDEN
SQUARE D COMPANY
1415 SOUTH ROSELLE ROAD
PALATINE, IL 60067

COPY MAILED

MAR - 5 2002

OFFICE OF PETITIONS

In re Application of William W. Chen, Gary T. Jones, Jay B. Ballard and E.J. Homier Application No. 09/885,206 Filed: June 20, 2001 Title: POSITIVE TEMPERATURE COEFFICIENT RESISTIVITY PROTECTED POWER TRANSFORMER	DECISION ACCORDING STATUS UNDER §1.47

This is a decision on "Petition by Inventor Signing on Behalf of Other Named Inventor who Refused to Sign under 37 CFR §1.47(a)," filed February 26, 2002.

The above-identified application was filed on June 20, 2001, without an executed oath or declaration and naming William Chen, Gary Jones, Jay Ballard and E.J. Hormier as joint inventors. Accordingly, on August 16, 2001, a "Notice to File Missing Parts of Application" was mailed, requiring an executed oath or declaration and surcharge for its late filing. This Notice set a period for reply of two months from the mailing date of the notice.

An initial petition under §1.47 filed December 26, 2001 (certificate of mailing October 16, 2001), was not accepted because it was signed by only one inventor (Letter mailed February 5, 2002). Applicants timely responded with the instant petition, executed by the three signing inventors (Jones, Ballard and Hormier) to make application on behalf of the fourth nonsigning inventor (Chen). Applicants assert that status under §1.47 is proper because inventor Chen refuses to join in the application.

A grantable petition under 37 C.F.R. §1.47(a) requires: (1) proof that the non-signing inventor cannot be reached or refuses to sign the oath or declaration after having been presented with the application papers (specification, claims and drawings); (2) an acceptable oath or declaration in compliance with 35 U.S.C. §§115 and 116; (3) the petition fee; and (4) a statement of the last known address of the non-signing inventor.

By affidavit of attorney Golden, applicants have shown that inventor Chen has been presented with the application papers, and by his conduct, has refused to join in the application.

The declaration filed December 26, 2001, and the petition filed February 26, 2002, have been reviewed and found in compliance with 37 C.F.R. §1.47(a).

This application is hereby accorded Rule 1.47(a) status.

As provided in new Rule 1.47(c), this Office will forward notice of this application's filing to the non-signing inventors at the address given in the petition. Notice of the filing of this application will also be published in the Official Gazette.

The application file is being forwarded to the Office of Initial Patent Examination for completion of pre-examination processing.

Telephone inquiries regarding this decision should be directed to Petitions Attorney Nancy Johnson at (703) 305-0309.

Beverly M. Flanagan
Supervisory Petitions Examiner
Office of Petitions
Office of the Deputy Commissioner
for Patent Examination Policy

UNITED STATES PATENT AND TRADEMARK OFFICE

DOCKETED
APR 21 2003 rh

COMMISSIONER FOR PATENTS
UNITED STATES PATENT AND TRADEMARK OFFICE
WASHINGTON, D.C. 20231
www.uspto.gov
DW 04-03

OIPE JC10
APR 30 2003
PATENT & TRADEMARK OFFICE

Paper No. 19

EDWARDS L. PENCOSKE
THORP REED & ARMSTRONG, LLP
ONE OXFORD CENTRE
301 GRANT STREET, 14TH FLOOR
PITTSBURGH, PA 15219-1425

COPY

COPY MAILED

APR 15 2003

OFFICE OF PETITIONS

In re Application of	:	
Keeth et al.	:	
Application No. 09/885,217	:	DECISION GRANTING PETITION
Filed: 20 June, 2001	:	
Attorney Docket No. DB000575-012	:	

This is a decision on the renewed petition, bearing a certificate of mailing dated 11 January, 2002, to accord the above-identified application a filing date of 20 June, 2001, rather than the presently accorded filing date of 22 August, 2001.

The petition is **GRANTED**.

On 20 June, 2001, a bundle of papers was deposited in the USPTO, and was assigned Application No. 09/885,217. The papers consisted of, *inter alia*, 232 pages of specification, including Claims 1-80, a signed declaration, and a preliminary amendment, which, *inter alia*, canceled Claims 1-222, 238-246, and 251-465. Accordingly, on 6 August, 2001, Initial Patent Examination Division mailed a Notice of Incomplete Nonprovisional Application, stating that the application had not been accorded a filing date because the specification did not include at least one claim, and that page 29 of the specification appeared to have been omitted. The petition filed on 22 August, 2001, was dismissed in a decision mailed on 15 November, 2001.

Upon further review, the Office notes that the preliminary amendment filed on 20 June, 2001, which directed the Office to cancel all existing claims was entered sometime after 16 January, 2002, although the actual date of entry is unknown, since the application was forwarded to the technology center from the Office of Initial Patent Examination on 16 January, 2002. However, on 5 February, 2002, an *Official Gazette* notice, which was signed on 9 January, 2002, was published stating that, in

light of a recent decision by the Federal Circuit,[1] the USPTO will deny entry to any amendment (whether submitted with the filing of the application or after the filing date of the application) that seeks cancellation of all claims without presenting any new or substitute claims.[2] Therefore, the entry of the preliminary amendment canceling all claims was of no legal force and effect since it was contrary to Office policy. For fee calculation purposes, the USPTO will treat such an application as containing only a single claim.

The preliminary amendment filed on 20 June, 2001, canceling all claims has been unentered. Therefore, the application as filed contained at least one claim and is therefore entitled to a filing date of 20 June, 2001.

Receipt is acknowledged of the preliminary amendment filed by facsimile on 6 March, 2003.

The application is being returned to the Office of Initial Patent Examination for reprocessing with a filing date of 20 June, 2001, and an indication on the bib-data sheet that 1 claim was present on filing.

Telephone inquiries concerning this matter may be directed to the undersigned at (703)308-6918.

D Wood

Douglas I. Wood
Senior Petitions Attorney
Office of Petitions

---

[1] Exxon Corp. v. Phillips Petroleum Co., 265 F.3d 1249, 60 USPQ2d 1368 (Fed. Cir. 2001).

[2] See Treatment of Amendments that if Entered Would Cancel All of the Claims in an Application (signed 01/09/02), 1255 OG 827 (Feb. 5, 2002).

UNITED STATES PATENT AND TRADEMARK OFFICE

Commissioner for Patents
United States Patent and Trademark Office
Washington, D.C. 20231
www.uspto.gov
DIW 10-01

Paper No. 4

EDWARDS L. PENCOSKE
THORP REED & ARMSTRONG, LLP
ONE OXFORD CENTRE
301 GRANT STREET, 14TH FLOOR
PITTSBURGH, PA 15219-1425

COPY MAILED

NOV 1 5 2001

OFFICE OF PETITIONS

In re Application of	:
Keeth et al.	: DECISION DISMISSING
Application No. 09/885,217	: PETITION
Filed: 22 August, 2001	:
Attorney Docket No. DB000575-012	:

This is a decision on the petition, filed on 22 August, 2001, to accord the above-identified application a filing date of 20 June, 2001, with a complete specification, including at least one claim, as a part of the original disclosure.

The petition is dismissed.

On 20 June, 2001, a bundle of papers was deposited in the USPTO, and was assigned Application No. 09/885,217. The papers consisted of, *inter alia*, 232 pages of specification, including Claims 1-80, a signed declaration, and a preliminary amendment, which, *inter alia*, canceled Claims 1-222, 238-246, and 251-465. Accordingly, on 6 August, 2001, Initial Patent Examination Division mailed a Notice of Incomplete Nonprovisional Application, stating that the application had not been accorded a filing date because the specification did not include at least one claim and that Page 29 appeared to have been omitted from the specification.

In response, on 22 August, 2001, the present petition was filed. Petitioners assert that the application as filed contained 19 claims. Petitioners state that the present application is a division of Application No. 09/620,626 which is a division of Application No. 08/916,692. Application No. 08/916,692 as filed contained Claims 1-80. Application No. 09/620,626 was filed with a preliminary amendment adding Claims 81-465. Petitioners point to a statement on the transmittal letter for Application No. 09/885,217 which incorporates by references the entire disclosure

of the prior application No. 09/620,626, as evidence that the preliminary amendment adding Claims 81-465 was incorporated into the present application, and that the application as filed with the preliminary amendment canceling Claims 1-222, 238-246, and 251-465 included 19 claims.

Petitioners' assertion is not well taken. The declaration filed in the present application is the declaration filed in Application No. 08/916,692 which was filed prior to the filing of Application No. 09/620,626 and the amendment thereto adding Claims 81-465. The declaration does not execute a subsequently-filed amendment. What was incorporated, therefore, is only the specification, claims, and drawings from Application No. 08/916,692. Therefore, the Notice correctly stated that the specification did not include at least one claim. The application is accorded a filing date of 22 August, 2001, the date that the preliminary amendment filed in Application No. 09/620,626 adding Claims 81-465, was filed in the present application.

In view of the above, petitioners' assertion that Page 29 of the specification (description and claims) was filed on 20 June, 2001, is moot. The application, including Page 29, will be accorded a filing date of 22 August, 2001.

It is noted that since prior Application No. 09/620,626 had not issued as of 22 August, 2001, copendency exists between it and the present application.

As the present petition was not necessitated by Office error, the petition fee will not be refunded.

The application is being returned to the Office of Initial Patent Examination for reprocessing with a filing date of 22 August, 2001, and an indication on the bib-data sheet that 19 claims were present on filing.

Telephone inquiries concerning this matter may be directed to Petitions Attorney Douglas I. Wood at (703)308-6918.

Beverly M. Flanagan
Supervisory Petitions Attorney
Office of Petitions
Office of the Deputy Commissioner
for Patent Examination Policy

UNITED STATES PATENT AND TRADEMARK OFFICE

COMMISSIONER FOR PATENTS
UNITED STATES PATENT AND TRADEMARK OFFICE
WASHINGTON, D.C. 20231
www.uspto.gov
DIW 04-03

Paper No. 19

EDWARDS L. PENCOSKE
THORP REED & ARMSTRONG, LLP
ONE OXFORD CENTRE
301 GRANT STREET, 14TH FLOOR
PITTSBURGH, PA 15219-1425

COPY MAILED

APR 15 2003

OFFICE OF PETITIONS

In re Application of	:	
Keeth et al.	:	
Application No. 09/885,217	:	DECISION GRANTING PETITION
Filed: 20 June, 2001	:	
Attorney Docket No. DB000575-012	:	

This is a decision on the renewed petition, bearing a certificate of mailing dated 11 January, 2002, to accord the above-identified application a filing date of 20 June, 2001, rather than the presently accorded filing date of 22 August, 2001.

The petition is **GRANTED**.

On 20 June, 2001, a bundle of papers was deposited in the USPTO, and was assigned Application No. 09/885,217. The papers consisted of, *inter alia*, 232 pages of specification, including Claims 1-80, a signed declaration, and a preliminary amendment, which, *inter alia*, canceled Claims 1-222, 238-246, and 251-465. Accordingly, on 6 August, 2001, Initial Patent Examination Division mailed a Notice of Incomplete Nonprovisional Application, stating that the application had not been accorded a filing date because the specification did not include at least one claim, and that page 29 of the specification appeared to have been omitted. The petition filed on 22 August, 2001, was dismissed in a decision mailed on 15 November, 2001.

Upon further review, the Office notes that the preliminary amendment filed on 20 June, 2001, which directed the Office to cancel all existing claims was entered sometime after 16 January, 2002, although the actual date of entry is unknown, since the application was forwarded to the technology center from the Office of Initial Patent Examination on 16 January, 2002. However, on 5 February, 2002, an *Official Gazette* notice, which was signed on 9 January, 2002, was published stating that, in

light of a recent decision by the Federal Circuit,[1] the USPTO will deny entry to any amendment (whether submitted with the filing of the application or after the filing date of the application) that seeks cancellation of all claims without presenting any new or substitute claims.[2] Therefore, the entry of the preliminary amendment canceling all claims was of no legal force and effect since it was contrary to Office policy. For fee calculation purposes, the USPTO will treat such an application as containing only a single claim.

The preliminary amendment filed on 20 June, 2001, canceling all claims has been unentered. Therefore, the application as filed contained at least one claim and is therefore entitled to a filing date of 20 June, 2001.

Receipt is acknowledged of the preliminary amendment filed by facsimile on 6 March, 2003.

The application is being returned to the Office of Initial Patent Examination for reprocessing with a filing date of 20 June, 2001, and an indication on the bib-data sheet that 1 claim was present on filing.

Telephone inquiries concerning this matter may be directed to the undersigned at (703)308-6918.

D Wood

Douglas I. Wood
Senior Petitions Attorney
Office of Petitions

---

[1] Exxon Corp. v. Phillips Petroleum Co., 265 F.3d 1249, 60 USPQ2d 1368 (Fed. Cir. 2001).

[2] See Treatment of Amendments that if Entered Would Cancel All of the Claims in an Application (signed 01/09/02), 1255 OG 827 (Feb. 5, 2002).

UNITED STATES PATENT AND TRADEMARK OFFICE

Commissioner for Patents
United States Patent and Trademark Office
P.O. Box 1450
Alexandria, VA 22313-1450
www.uspto.gov

PAPER NO.

SENNIGER POWERS LEAVITT AND ROEDEL
ONE METROPOLITAN SQUARE
16TH FLOOR
ST LOUIS, MO 63102

COPY MAILED

MAR 2 9 2005

OFFICE OF PETITIONS

In re Application of	:	
Moorman et al.	:	
Application No. 09/885,221	:	LETTER REGARDING
Filed: June 20, 2001	:	PATENT TERM ADJUSTMENT
Atty Docket No. C-2805/5 (PHA 4166.5)	:	

This is in response to "REQUEST FOR RECONSIDERATION OF THE PATENT TERM ADJUSTMENT PURSUANT TO 37 CFR 1.705" filed November 8, 2004. Applicants submit that the present application is subject to a terminal disclaimer, and is therefore not entitled to the benefits of the patent term adjustment under 35 U.S.C. § 154.

The request is **DISMISSED**. However, for the reasons set forth below, the initial determination of patent term adjustment is being corrected to zero (0) days.

The Office has updated the PAIR screen to reflect that the correct Patent Term Adjustment (PTA) determination at the time of the mailing of the Notice of Allowance is zero **(0)** days. A copy of the updated PAIR screen, showing the correct determination, is enclosed.

On August 9, 2004, the Office mailed the Determination of Patent Term Adjustment under 35 U.S.C. 154(b) in the above-identified application. The Notice stated that the patent term adjustment to date is 20 days. Applicants assert that the patent issuing from this application is not entitled to patent term adjustment on the basis that a terminal disclaimer was filed in this application.

35 U.S.C. 154(b)(2)(B) provides that:

> No patent the term of which has been disclaimed beyond a specified date may be adjusted under this section beyond the expiration date specified in the disclaimer.

37 CFR § 1.703(g) provides that:

> No patent, the term of which has been disclaimed beyond a specified date, shall be adjusted under § 1.702 and this section beyond the expiration date specified in the disclaimer.

The provisions of § 154(b), for adjustment due to examination delay, apply to original applications[1], other than designs, filed on or after May 29, 2000. The Office calculates patent term adjustment for examination delay in all eligible applications. In calculating the patent term adjustment, the Office does not differentiate between applications that have terminal disclaimers and those that do not. Nor does the Office undertake the burdensome task of reviewing every application with a terminal disclaimer to determine if the patent term adjustment accorded would adjust the term beyond the expiration date specified in the disclaimer.

Rather, on issuance of the application, in compliance with 35 U.S.C. 154(b) and 37 CFR § 1.703(g), it is indicated in the patent that the patent term adjustment indicated therein is subject to any disclaimer. Moreover, it is also stated therein that the patent is subject to a terminal disclaimer.

However, a review of the application history reveals that the patent term adjustment of 20 days is incorrect. Pursuant to § 1.704(b), the Office should have entered a period of reduction for applicant delay in responding to the final rejection mailed February 14, 2003. Applicants did not file their response, a Request for Continuing Examination (RCE) and amendment, until July 11, 2003, three months and 58 days later. Accordingly, the Office should have entered a period of reduction of 58 days.

In view thereof, the patent term adjustment at the time of the mailing of allowance is zero (0) days.

---

[1] Since a continued prosecution application (CPA) under § 1.53(d) is a new application, the filing of a CPA application on or after May 29, 2000, in an application filed before May 29, 2000 causes the application (CPA) to be eligible for patent term adjustment.

As this letter was submitted as an advisement to the Office of an error in Applicants' favor, the Office will not assess the $200.00 application fee under 37 CFR 1.705(b). The Office thanks applicants for their good faith and candor in bringing this to the attention of the Office.

The application is being forwarded to the Office of Patent Publication for issuance of the application.

Telephone inquiries specific to this matter should be directed to Nancy Johnson, Senior Petitions Attorney, at (571) 272-3219.

Karin Ferriter for

Karin Ferriter
Senior Legal Advisor
Office of Patent Legal Administration
Office of Deputy Commissioner
for Patent Examination Policy

Enclosure: Copy of Revised PAIR Screen

UNITED STATES PATENT AND TRADEMARK OFFICE

UNITED STATES DEPARTMENT OF COMMERCE
United States Patent and Trademark Office
Address: COMMISSIONER FOR PATENTS
P.O. Box 1450
Alexandria, Virginia 22313-1450
www.uspto.gov

APPLICATION NO.	FILING DATE	FIRST NAMED INVENTOR	ATTORNEY DOCKET NO.	CONFIRMATION NO.
09/885,226	06/20/2001	Robert L. Payer	1065us	4417

25263 7590 08/09/2007
J GRANT HOUSTON
AXSUN TECHNOLOGIES INC
1 FORTUNE DRIVE
BILLERICA, MA 01821

EXAMINER
HYEON, HAE M

ART UNIT	PAPER NUMBER
2839	

MAIL DATE	DELIVERY MODE
08/09/2007	PAPER

Please find below and/or attached an Office communication concerning this application or proceeding.

The time period for reply, if any, is set in the attached communication.

UNITED STATES PATENT AND TRADEMARK OFFICE

Commissioner for Patents
United States Patent and Trademark Office
P.O. Box 1450
Alexandria, VA 22313-1450
www.uspto.gov

J. GRANT HOUSTON
AXSUN TECHNOLOGIES INC
1 Fortune Drive
Billerica, MA 01821

AUG - 9 2007

In re Application of:
PAYER et al.
Serial No.: 09/885,226
Filed: June 20, 2001
Attorney Docket No.: **1065us**

DECISION ON PETITION TO WITHDRAW HOLDING OF ABANDONMENT

This is a decision on the petition filed on December 30, 2005, to withdraw the holding of abandonment under 37 C.F.R. § 1.181. No fee is required.

The petition is **GRANTED**.

The application was held abandoned for failure to timely file a response to the Office action mailed on April 07, 2005. A Notice of Abandonment was mailed on November 16, 2005.

The petition is granted to the extent that a response to the Office action was received in the USPTO on August 08, 2005. The response included a request for a one (1) month extension of time. Therefore, the application was prematurely held abandoned.

For the above stated reason, the petition is granted. The Notice of Abandonment is hereby vacated and the holding of abandonment withdrawn. The application is restored to pending status.

It is further noted that on April 7, 2005, a Non-Final Office Action was mailed to the Applicant rejecting claims 1-26, and prosecution was re-opened. Subsequent to re-opening of the prosecution, on August 8, 2005, the Applicant filed a response entitled "Third Request To Reinstate Appeal".

MPEP 1204.01 states:

> If an appellant wishes to reinstate an appeal after prosecution is reopened, appellant must file a new notice of appeal in compliance with 37 CFR 41.31 and a complete new appeal brief in compliance with 37 CFR 41.37. Any previously paid appeal fees set forth in 37 CFR 41.20 for filing a notice of appeal, filing an appeal brief, and requesting an oral hearing (if applicable) will be applied to the new appeal on the same application as long as a final Board decision has not been made on the prior appeal. If, however, the appeal fees

> have increased since they were previously paid, then appellant must pay the difference between the current fee(s) and the amount previously paid. Appellant must file a complete new appeal brief in compliance with the format and content requirements of 37 CFR 41.37(c) within two months from the date of filing the new notice of appeal. See MPEP § 1205.

For this response to be complete, it must include a new notice of appeal in compliance with 37 CFR 41.31, and a complete new appeal brief in compliance with 37 CFR 41.37. The response does not include a new notice of appeal, nor a complete new appeal brief. As such, the response is incomplete and non-compliant.

It is also noted that the Appeal Brief filed 12/01/2003, and the subsequent Supplemental Appeal Brief filed 4/22/04, do not address issues raised in the Non-final rejection mailed 4/7/05, and as such, the application is not ready for forwarding to the Board.

Applicant is given a TIME PERIOD of ONE (1) MONTH or THIRTY (30) DAYS from the mailing date of this decision, whichever is longer, within which to supply the omission or correction in order to avoid abandonment. EXTENSIONS OF THIS TIME PERIOD MAY BE GRANTED UNDER 37 CFR 1.136(a).

Inquiries regarding this decision should be directed to Clayton E. LaBalle, TQAS, at (571) 272-1594.

Richard K. Seidel, Director
Technology Center 2800
Semiconductors, Electrical and Optical
Systems and Components

UNITED STATES PATENT AND TRADEMARK OFFICE

COMMISSIONER FOR PATENTS
UNITED STATES PATENT AND TRADEMARK OFFICE
WASHINGTON, D.C. 20231
www.uspto.gov

Paper No. 6

COOPER & DUNHAM LLP
1185 AVENUE OF THE AMERICAS
NEW YORK, NY 10036

COPY MAILED

JUN 1 0 2002

OFFICE OF PETITIONS

In re Application of	:
Moses Rodriguez et al.	:
Application No. 09/885,227	: DECISION NOTING JOINDER OF
Filed: June 20, 2001	: INVENTOR AND PETITION UNDER
Attorney Docket No. 60726-A/JPW/GJG/CSN	: 37 CFR 1.47(b) MOOT

This is in response to the petition under 37 CFR 1.47(b), filed April 17, 2002. Papers filed by facsimile transmission on June 4, 2002 included a declaration signed by previously nonsigning inventors Moses Rodriguez and Daren Ure in compliance with 37 CFR 1.63 and 1.64.

In view of the joinder of the inventor, further consideration under 37 CFR 1.47(b) is moot; this application does not have any rule 1.47(b) status and no such status should appear on the file wrapper. This application need not be returned to this office for any further consideration under 37 CFR 1.47(b).

This application will be forwarded to the Office of Initial Patent Examination for further processing.

Telephone inquiries related to this decision should be directed to Irvin Dingle at (703) 306-5684.

Frances Hicks

Frances Hicks
Lead Petitions Examiner
Office of Petitions
Office of the Deputy Commissioner
for Patent Examination Policy

Insert

This is in response to the petition under 37 CFR 1.47(b), filed April 17, 2002. Papers filed by facsimile transmission on June 4, 2002 included a declaration signed by previously nonsigning inventors Moses Rodriguez and Daren Ure in compliance with 37 CFR 1.63 and 1.64.

UNITED STATES PATENT AND TRADEMARK OFFICE

UNDER SECRETARY OF COMMERCE FOR INTELLECTUAL PROPERTY AND
DIRECTOR OF THE UNITED STATES PATENT AND TRADEMARK OFFICE
WASHINGTON, DC 20231
www.uspto.gov

MAILED

MAR 11 2003

DIRECTOR'S OFFICE
TECHNOLOGY CENTER 3600

Ostrolenk, Faber, Gerb & Soffen, LLP
1180 Avenue of the Americas
New York, NY 10036-8403

Paper No. 7

In re application of
Robert Kleinbaum
Application No. 09/885,245
Filed: June 19, 2001
For: METHOD AND SYSTEM FOR NETWORK-BASED COMMUNITY FOR SHARING INFORMATION SERVICES

DECISION ON PETITION TO MAKE SPECIAL (INFRINGEMENT)

This is a decision on the petition under 37 C.F.R § 1.102(d) filed July 8, 2002 to make the above-identified application special.

The petition requests that the above-identified application be made special under the procedure set forth in M.P.E.P. § 708.02, item II: Infringement.

MPEP 708.02 states that a Petition to Make Special based on Infringement must have the following: (1) the appropriate petition fee under 37 CFR 1.17(i); (2) a statement by the assignee, applicant, or attorney alleging: (A) that there is an infringing device or product actually on the market; (B) that a rigid comparison of the alleged infringing device or product with the claims of the application has been made, and that, in his or her opinion, some of the claims are unquestionably infringed; and (C) that he or she has made a careful and thorough search of the prior art, or has good knowledge of the prior art, and has sent a copy of the references deemed most closely related to the subject matter encompassed by the claims.

The petition filed July 8, 2002 includes all of the requirements above and, therefore, the petition is **GRANTED**.

The examiner is directed (1) to make an interference search for possible interfering applications; (2) to promptly examine this application out of turn; and (3) if any interfering application is discovered, to examine such application simultaneously and state in the first official letter of such application that it is being taken out of turn because of a possible interference.

Petitioner is advised that this application will continue to be special, throughout its entire prosecution and pendency, including interference and appeal, if any, only if petitioner makes a prompt *bona fide* effort, in response to each Office action, to place the application in condition for allowance, even if it is necessary to conduct an interview with the examiner to accomplish this purpose.

Randolph A. Reese
Special Programs Examiner
Technology Center 3600
(703) 308-2121

rar/tpl : 02/25/03

UNITED STATES
PATENT AND
TRADEMARK OFFICE

UNDER SECRETARY OF COMMERCE FOR INTELLECTUAL PROPERTY AND
DIRECTOR OF THE UNITED STATES PATENT AND TRADEMARK OFFICE
WASHINGTON, D.C. 20231
www.uspto.gov

September 5, 2001

Paper # 3

Netrake Corporation
Suite 100
3000 Technology Drive
Plano TX 75074

In re Application of:	Maher, et al.	:	DECISION GRANTING
Application No.:	60/279,488	:	PETITION
Filed:	March 28, 2001	:	
Attorney Docket No.:	NR-9	:	

This is a decision on your petition under 37 CFR 1.53(b)(1), received in the Patent and Trademark Office on May 09, 2001, to convert the above identified application to a non-provisional application under 35 U.S.C. 111 (a) and 37 CFR 1.53(b)(1).

The petition is granted.

The application will be processed in the Office of Initial Patent Examination (OIPE) as a non-provisional application under 35 U.S.C. 111(a) and 37 CFR 1.53(b)(1), including the assignment of a new non-provisional application number.

The non-provisional application serial number is **09/885,249**. The filing receipt for the non-provisional application will be mailed in due course.

Janice Tippett, Program Assistant
Office of Initial Patent Examination
(703) 308-0910

UNITED STATES
PATENT AND
TRADEMARK OFFICE

UNDER SECRETARY OF COMMERCE FOR INTELLECTUAL PROPERTY AND
DIRECTOR OF THE UNITED STATES PATENT AND TRADEMARK OFFICE
WASHINGTON, D.C. 20231
www.uspto.gov

September 4, 2001

Paper # 5

CATERPILLAR INC.
100 N.E. ADAMS STREET
PATENT DEPT.
PEORIA , IL 61629-6490

In re Application of:	Dietz, et al.	:	DECISION GRANTING
Application No.:	60/229,483	:	PETITION
Filed:	August 31, 2000	:	
Attorney Docket No.:	99-639	:	

This is a decision on your petition under 37 CFR 1.53(b)(1), received in the Patent and Trademark Office on May 29, 2001, to convert the above identified application to a non-provisional application under 35 U.S.C. 111 (a) and 37 CFR 1.53(b)(1).

The petition is granted.

The application will be processed in the Office of Initial Patent Examination (OIPE) as a non-provisional application under 35 U.S.C. 111(a) and 37 CFR 1.53(b)(1), including the assignment of a new non-provisional application number.

The non-provisional application serial number is **09/885,254**. The filing receipt for the non-provisional application will be mailed in due course.

Janice Tippett, Program Assistant
Office of Initial Patent Examination
(703) 308-0910

UNITED STATES
PATENT AND
TRADEMARK OFFICE

UNDER SECRETARY OF COMMERCE FOR INTELLECTUAL PROPERTY AND
DIRECTOR OF THE UNITED STATES PATENT AND TRADEMARK OFFICE
WASHINGTON, D.C. 20231
www.uspto.gov

September 5, 2001

Paper # 5

Office of the Assistant Counsel
for Intellectual Property
Code 1008.2
Naval Research Laboratory
Washington DC 20375-5325

In re Application of:	Rose-Pehrsson, et al.	:	DECISION GRANTING
Application No.:	60/214,244	:	PETITION
Filed:	June 16, 2000	:	
Attorney Docket No.:	NC 80,251	:	

This is a decision on your petition under 37 CFR 1.53(c)(3), received in the Patent and Trademark Office on June 15, 2001, to convert the above identified application to a non-provisional application under 35 U.S.C. 111 (a) and 37 CFR 1.53(c)(3).

The petition is granted.

The application will be processed in the Office of Initial Patent Examination (OIPE) as a non-provisional application under 35 U.S.C. 111(a) and 37 CFR 1.53(c)(3), including the assignment of a new non-provisional application number.

The non-provisional application serial number is **09/885,255**. The filing receipt for the non-provisional application will be mailed in due course.

Janice Tippett, Program Assistant
Office of Initial Patent Examination
(703) 308-0910

UNITED STATES
PATENT AND
TRADEMARK OFFICE

UNDER SECRETARY OF COMMERCE FOR INTELLECTUAL PROPERTY AND
DIRECTOR OF THE UNITED STATES PATENT AND TRADEMARK OFFICE
WASHINGTON, D.C. 20231
www.uspto.gov

September 5, 2001

Paper # 3

Claude F. Purchase, Jr.
Warner-Lambert Company
2800 Plymouth Road
Ann Arbor MI 48105

In re Application of:	Devalaraja, et al.	:	DECISION GRANTING
Application No.:	60/270,948	:	PETITION
Filed:	February 23, 2001	:	
Attorney Docket No.:	A000026L2-01CFP	:	

This is a decision on your petition under 37 CFR 1.53(b)(1), received in the Patent and Trademark Office on July 09, 2001, to convert the above identified application to a non-provisional application under 35 U.S.C. 111 (a) and 37 CFR 1.53(b)(1).

The petition is granted.

The application will be processed in the Office of Initial Patent Examination (OIPE) as a non-provisional application under 35 U.S.C. 111(a) and 37 CFR 1.53(b)(1), including the assignment of a new non-provisional application number.

The non-provisional application serial number is **09/885,259**. The filing receipt for the non-provisional application will be mailed in due course.

Janice Tippett, Program Assistant
Office of Initial Patent Examination
(703) 308-0910

UNITED STATES
PATENT AND
TRADEMARK OFFICE

UNDER SECRETARY OF COMMERCE FOR INTELLECTUAL PROPERTY AND
DIRECTOR OF THE UNITED STATES PATENT AND TRADEMARK OFFICE
WASHINGTON, D.C. 20231
www.uspto.gov

October 30, 2001

Paper # 3

James R. Smith
Caterpillar, Inc
Intellectual Property Department, AB6490
100 NE Adams Street
Peoria IL 61629-6490

In re Application of:	Pivac	:	DECISION GRANTING
Application No.:	60/294,067	:	PETITION
Filed:	May 29, 2001	:	
Attorney Docket No.:	01-307L	:	

This is a decision on your petition under 37 CFR 1.53(c)(3), received in the Patent and Trademark Office on August 23, 2001, to convert the above identified application to a non-provisional application under 35 U.S.C. 111 (a) and 37 CFR 1.53(c)(3).

The petition is granted.

The application will be processed in the Office of Initial Patent Examination (OIPE) as a non-provisional application under 35 U.S.C. 111(a) and 37 CFR 1.53(b), including the assignment of a new non-provisional application number.

The non-provisional application serial number is **09/885,263**. The filing receipt for the non-provisional application will be mailed in due course.

Janice Tippett, Program Assistant
Office of Initial Patent Examination
(703) 308-0910

UNITED STATES
PATENT AND
TRADEMARK OFFICE

UNDER SECRETARY OF COMMERCE FOR INTELLECTUAL PROPERTY AND
DIRECTOR OF THE UNITED STATES PATENT AND TRADEMARK OFFICE
WASHINGTON, D.C 20231
www.uspto.gov

October 31, 2001

Paper # 3

Irell & Manella LLP
Suite 900
1800 Avenue of the Stars
Los Angeles CA 90067

In re Application of:	Boyd, Richard	:	DECISION GRANTING
Application No.:	60/309,808	:	PETITION
Filed:	August 1, 2001	:	
Attorney Docket No.:	156857-0023	:	

This is a decision on your petition under 37 CFR 1.53(c)(3), received in the Patent and Trademark Office on September 20, 2001, to convert the above identified application to a non-provisional application under 35 U.S.C. 111 (a) and 37 CFR 1.53(c)(3).

The petition is granted.

The application will be processed in the Office of Initial Patent Examination (OIPE) as a non-provisional application under 35 U.S.C. 111(a) and 37 CFR 1.53(b), including the assignment of a new non-provisional application number

The non-provisional application serial number is **09/885,268**. The filing receipt for the non-provisional application will be mailed in due course.

Janice Tippett, Program Assistant
Office of Initial Patent Examination
(703) 308-0910

UNITED STATES
PATENT AND
TRADEMARK OFFICE

UNDER SECRETARY OF COMMERCE FOR INTELLECTUAL PROPERTY AND
DIRECTOR OF THE UNITED STATES PATENT AND TRADEMARK OFFICE
WASHINGTON, D.C. 20231
www.uspto.gov

October 31, 2001

Paper # 3

Kirk M. Miles
Webb Ziesenheim Logsdon Orkin & Hanson PC
700 Koppers Building
436 Seventh Avenue
Pittsburgh PA 15219-1818

In re Application of:	Crane, et.al	:	DECISION GRANTING
Application No.:	60/232,813	:	PETITION
Filed:	Sept. 15, 2000	:	
Attorney Docket No.:	3693-011332(ICC-236)	:	

This is a decision on your petition under 37 CFR 1.53(c)(3), received in the Patent and Trademark Office on August 29, 2001, to convert the above identified application to a non-provisional application under 35 U.S.C. 111 (a) and 37 CFR 1.53(c)(3).

The petition is granted.

The application will be processed in the Office of Initial Patent Examination (OIPE) as a non-provisional application under 35 U.S.C. 111(a) and 37 CFR 1.53(b), including the assignment of a new non-provisional application number.

The non-provisional application serial number is **09/885,269**. The filing receipt for the non-provisional application will be mailed in due course.

Janice Tippett, Program Assistant
Office of Initial Patent Examination
(703) 308-0910

UNITED STATES
PATENT AND
TRADEMARK OFFICE

UNDER SECRETARY OF COMMERCE FOR INTELLECTUAL PROPERTY AND
DIRECTOR OF THE UNITED STATES PATENT AND TRADEMARK OFFICE
WASHINGTON, D.C. 20231
www.uspto.gov

January 9, 2002

Paper # 3

Birch, Stewart, Kolasch & Birch LLP
P O Box 747
Falls Church VA 22040-0747

In re Application of:	Merkel, et. al.	:	DECISION GRANTING
Application No.:	60/250,465	:	PETITION
Filed:	December 4, 2000	:	
Attorney Docket No.:	0091-0189P	:	

This is a decision on your petition under 37 CFR 1.53(c)(3), received in the Patent and Trademark Office on December 4, 2001, to convert the above identified application to a non-provisional application under 35 U.S.C. 111 (a) and 37 CFR 1.53(c)(3).

The petition is granted.

The application will be processed in the Office of Initial Patent Examination (OIPE) as a non-provisional application under 35 U.S.C. 111(a) and 37 CFR 1.53(b), including the assignment of a new non-provisional application number.

The non-provisional application serial number is **09/885,285**. The filing receipt for the non-provisional application will be mailed in due course.

Janice Tippett, Program Assistant
Office of Initial Patent Examination
(703) 308-0910

UNITED STATES PATENT AND TRADEMARK OFFICE

Under Secretary of Commerce for Intellectual Property and
Director of the United States Patent and Trademark Office
Washington, D.C. 20231
www.uspto.gov

Paper No. 5

COPY MAILED

JAN 3 2002

OFFICE OF PETITIONS

Hickman Palermo Truong & Becker
600 Willow Street
San Jose, CA 95125-5106

In re Application of	:	
Markson et al.	:	DECISION ON PETITION
Application No. 09/885,290	:	UNDER 37 CFR 1.137(f)
Filed: June 19, 2001	:	
Attorney Docket No. 55218-0519	:	

This is a decision on the petition under 37 CFR 1.137(b), which is properly treated as a petition under 37 CFR 1.137(f),[1] filed September 27, 2001, to accept the unintentionally delayed payment of the publication fee in the above-identified application.

The petition is **GRANTED**.

The above-identified application became abandoned pursuant to 35 USC 122(b)(2)(B)(iii) for failure to timely notify the United States Patent and Trademark Office (Office) of the filing of an application in a foreign country.

A petition under 37 CFR 1.137(f) must be accompanied by the following: (1) the reply which is met by the notification of such filing in a foreign country or under a multinational treaty;[2] (2) the petition fee as set forth in 37 CFR 1.17(m); and, (3) a statement that the entire delay in filing the required reply from the due date of the reply until the filing of a grantable petition was unintentional.

---

[1] 37 CFR 1.137(f) provides for revival of a nonprovisional application which became abandoned pursuant to the provisions of 35 USC 122(b)(2)(B)(iii) for failure to timely notify the Office of the filing of an application in a foreign country or under a multinational treaty that requires publication of applications eighteen months after filing.

[2] The filing of a petition under this section will not relieve applicant of the obligation to reply to any outstanding Office action.

The present petition is in compliance with the requirements of 37 CFR 1.137(f). Accordingly, applicant's failure to notify the Office timely of a foreign filing within 45 days as provided by 35 USC 122(b)(2)(B)(iii) is accepted as an unintentionally delay. The Office has processed the request to rescind the previous nonpublication request.

This application is being forwarded to the Office of Initial Patent Examination for further processing and issuing of a corrected filing receipt, indicating a projected publication date.

Telephone inquiries specifically concerning this decision be directed to the undersigned at (703) 306-5589.

Christina Tartera Donnell

Christina Tartera Donnell
Petitions Attorney
Office of Petitions
Office of the Deputy Commissioner
for Patent Examination Policy

UNITED STATES PATENT AND TRADEMARK OFFICE

Commissioner for Patents
United States Patent and Trademark Office
Washington, D.C. 20231
www.uspto.gov

Paper No. 11

ROSENTHAL & OSHA L.L.P.
1221 MCKINNEY AVENUE
SUITE 2800
HOUSTON, TX 77010

COPY MAILED

AUG 1 5 2002

OFFICE OF PETITIONS

In re Application of
Atsushi Shimizu
Application No. 09/885,296
Filed: June 20, 2001
Attorney Docket No. 15115/003001

DECISION ON PETITION

This is a decision on "Petition in Response to Notice of Omitted Item(s) in a Nonprovisional Application filed under 37 CFR 1.53(b)," filed May 31, 2002 (certificate of mailing May 10, 2002), which is properly treated as a petition under 37 CFR §1.182, requesting, in effect, that the "Notice of Omitted Items in a Nonprovisional Application" mailed March 15, 2002 be withdrawn.

Application papers in the above-identified application were filed on June 20, 2001. On August 15, 2001, the Initial Patent Examination Division mailed a Notice to File Missing Parts of Application, informing applicant *inter alia* that substitute drawings with English language text were required. On January 15, 2002, applicant filed substitute drawings. However, on March 15, 2002, the Initial Patent Examination Division mailed applicant a "Notice of Omitted Item(s) in a Nonprovisional Application." Applicants were notified that the application papers had been accorded a filing date; however, Figure 44 described in the specification appeared to have been omitted.

In reply, applicant timely filed the instant petition, asserting that the Figure 44 was indeed submitted as page 42/53, however the figure was mistitled as Figure 40. As the correct Figure 40 is noted as page 38/53, it would be obvious to someone reviewing the drawings that the second Figure 40 was merely mislabeled. Accompanying the petition was inter alia a letter to the Draftsperson along with a formal drawing of Figure 44.

The application file is the Official record of what was received in the Office. A review of the instant application file reveals that Figure 44 was not among the papers filed on January 15, 2002, mislabeled or otherwise. There are not two figures present in the application labeled "40," as alleged. Petitioner has submitted no evidence to support their claim that Figure 44 was among the papers filed on January 15, 2002 (e.g., itemized postcard receipt). Accordingly, it is concluded that the "Notice of Omitted Item(s)" mailed March 15, 2002, was correct in stating that Figures 44 described in the specification appeared to have been omitted. Therefore, the "Notice" was properly mailed and will not be withdrawn.

Accordingly, the petition is **DISMISSED**.

The request for refund of petition fee is denied. Petitioner has not shown that Figure 44 was received in the Office on January

15, 2002, as alleged. The petition fee is required, since the petition was not necessary to correct any PTO error.

Nonetheless, a review of the drawing sheets as originally filed with non-English text reveals that Figure 44 was among those drawings present in the Office on June 20, 2001. Moreover, the Office will accord a filing date to an application meeting the requirements of 35 U.S.C. 111(a), even though some or all of the application papers, including the written description and the claims, are in a language other than English and hence do not comply with 37 CFR 1.52. On this basis, Figure 44 as corrected to include English text is accepted.

This application is being forwarded to the Office of Initial Patent Examination for processing with a filing date of June 20, 2001, using the 52 sheets of drawings resupplied January 15, 2002 with English text; and the 1 sheet of drawings (figure 44) resupplied May 31, 2002 with English text.

Telephone inquiries related to this decision should be directed to Petitions Attorney Nancy Johnson at 703-305-0309.

Christina Tartera Donnell for

Beverly M. Flanagan
Supervisory Petitions Examiner
Office of Petitions
Office of the Deputy Commissioner
for Patent Examination Policy

SPE RESPONSE FOR CERTIFICATE OF CORRECTION

Paper No.:20091201

DATE : December 7, 2009

TO SPE OF : ART UNIT 2628

SUBJECT : Request for Certificate of Correction on Patent No.: 6954218

A response is requested with respect to the accompanying request for a certificate of correction.

Please complete this form and return with file, within **7** days to:
Certificates of Correction Branch - PK 3-910
Palm location **7590** - Tel. No. 305-8201

With respect to the change(s) requested, correcting Office and/or Applicant's errors, should the patent read as shown in the certificate of correction? No new matter should be introduced, nor should the scope or meaning of the claims be changed.

Thank You For Your Assistance **Certificates of Correction Branch**

The request for issuing the above-identified correction(s) is hereby:
Note your decision on the appropriate box.

☒ **Approved** **All** changes apply.

☐ **Approved in Part** Specify below which changes **do not** apply.

☐ **Denied** State the reasons for denial below.

Comments:

SPE: Ulka Chauhan **Art Unit** 2628

UNITED STATES PATENT AND TRADEMARK OFFICE

Commissioner for Patents
United States Patent and Trademark Office
Washington, D.C. 20231
www.uspto.gov

Paper No. 6

MEDTRONIC, INC.
710 MEDTRONIC PARKWAY NE
MS-LC340
MINNEAPOLIS MN 55432-5604

COPY MAILED

NOV 1 9 2002

OFFICE OF PETITIONS

In re Application of
Bryan J. Zart ET AL..
Application No. 09/885,354
Filed: June 20, 2001
Attorney Docket No.: **P-9476.00**

ON PETITION

This is a decision on the petition under 37 CFR 1.137(b), filed October 1, 2002, to revive the above-identified application.

The petition is **GRANTED**.

This application became abandoned for failure to respond in an appropriate and timely manner to the Notice to Filed Missing Parts of Nonprovisional Application ("the Notice") mailed August 13, 2001, which set forth a two (2) month shortened period for reply. No extensions of time under 37 CFR 1.136(a) were obtained. No reply was received within the allowable period. Accordingly, this application became abandoned on October 14, 2001. A Notice of Abandonment was mailed august 26, 2002.

Petitioner responded to the Notice by filing an executed declaration and an authorization to charge Deposit Account 13-2546 $110.00 for the petition fee and $130.00 for the late filing fee. However the fee for a petition to revive an unintentionally abandoned application is $1280.00. The aforementioned Deposit Account will be charged $1280.00 for the petition fee and $130.00 for the late filing fee.

The addition of the inventor Gregory A. Theis is acknowledged and accepted. See MPEP 201.03[1].

The application is being forward to the Office of Initial Patent Examination for further processing.

Telephone inquiries concerning this decision should be directed to Gregory J. Toatley, Jr. at (703) 305-4066 or to the undersigned at (703) 305-0010.

Kenya A. McLaughlin

Kenya A. McLaughlin
Petitions Attorney
Office of Petitions
Office of the Deputy Commissioner
for Patent Examination Policy

[1] MPEP 201.03 Where the first filed executed oath or declaration was filed on or after December 1, 1997, and sets forth an inventive entity which is different from the inventive entity initially set forth at the time of filing of the application, the actual inventorship will be taken from the executed oath or declaration.

UNITED STATES PATENT AND TRADEMARK OFFICE

COMMISSIONER FOR PATENTS
UNITED STATES PATENT AND TRADEMARK OFFICE
WASHINGTON, D.C. 20231
www.uspto.gov

Paper No. 3

CALFEE HALTER & GRISWOLD
800 SUPERIOR AVENUE
SUITE 1400
CLEVELAND, OH 44114

COPY MAILED

JUN 13 2002

OFFICE OF PETITIONS

In re Application of	:	
Shamim A. Alpha	:	DECISION GRANTING
Application No. 09/885,356	:	PETITION
Filed: June 20, 2001	:	
Attorney Docket No. 27638/04001	:	

This is a decision on the petition under 37 CFR 1.10(d) filed April 4, 2002, requesting that the above-identified application be accorded a filing date of June 20, 2001, rather than the presently according filing date of June 10, 2001.

Applicant requests the later filing date on the basis that the application was purportedly deposited with the U.S. Postal Service (USPS) as Express Mail on June 20, 2001, pursuant to the requirements of 37 CFR 1.10. The petition is accompanied by, inter alia, a copy of applicant's "Express Mail Corporate Account Mailing Statement" showing that the package bearing Express Mail label No. EL085017891US was charged on June 20, 2001. The same Express mail number appears on the original transmittal submitted with the present petition.

In view of the above, the evidence is convincing that the application was deposited as "Express Mail" with the US Postal Service on June 20, 2001.

The petition is granted. The $130.00 petition fee is being credited to counsel's Deposit Account No. 03-0172.

The application is being returned to Initial Patent Examination Division for correction of the filing date to June 20, 2001.

Telephone inquiries specific to this matter should be directed to Wan Laymon at (703) 306-5685.

Sherry Brinkley
Petitions Examiner
Office of Petitions
Office of the Deputy Commissioner
for Patent Examination Policy

UNITED STATES PATENT AND TRADEMARK OFFICE

COMMISSIONER FOR PATENTS
UNITED STATES PATENT AND TRADEMARK OFFICE
WASHINGTON, D.C. 20231
www.uspto.gov

Paper No.

FISH & NEAVE
1251 AVENUE OF THE AMERICAS
50TH FLOOR
NEW YORK, NY 10020-1105

COPY MAILED

DEC 27 2002

OFFICE OF PETITIONS

In re Application of
Joseph F. Pinkerton
Application No. 09/885,367
Filed: June 20, 2001
Attorney Docket No. JP-1

ON PETITION

This is a decision on the petition, filed December 24, 2002, under 37 CFR 1.313(c)(2) to withdraw the above-identified application from issue after payment of the issue fee.

The petition is **GRANTED.**

The above-identified application is withdrawn from issue for consideration of a submission under 37 CFR 1.114 (request for continued examination). See 37 CFR 1.313(c)(2).

Petitioner is advised that the issue fee paid on December 13, 2002 in the above-identified application cannot be refunded. If, however, the above-identified application is again allowed, petitioner may request that it be applied towards the issue fee required by the new Notice of Allowance.[1]

Telephone inquiries should be directed to Wan Laymon at (703) 306-5685.

After receipt of the application in the Office of Petitions, the application will be forwarded to Technology Center AU 2834 for processing of the request for continued examination under 37 CFR 1.114 and for consideration of the currently filed IDS.

Frances Hicks
Lead Petitions Examiner
Office of Petitions
Office of the Deputy Commissioner
for Patent Examination Policy

---

[1] The request to apply the issue fee to the new Notice must be made in writing and should be accompanied by the new Issue Fee Transmittal Form PTOL-85(b), along with a copy of this decision. Additionally, if the issue fee has increased from the previously paid issue fee, the balance due must be submitted. **Failure to timely request *in writing* that the previously paid issue fee be applied towards the new Notice and payment of any balance due will result in the abandonment of the application.**

UNITED STATES PATENT AND TRADEMARK OFFICE

Commissioner for Patents
United States Patent and Trademark Office
Washington, D.C. 20231
www.uspto.gov

Paper No. 17

FISH & NEAVE
1251 AVENUE OF THE AMERICAS
50TH FLOOR
NEW YORK, NY 10020-1105

COPY MAILED

APR 1 7 2003

OFFICE OF PETITIONS

In re Application of
Joseph F. Pinkerton
Application No. 09/885,367
Filed: June 20, 2001
Attorney Docket No. JP/001

:
:DECISION GRANTING PETITION
:UNDER 37 CFR 1.137(f) AND
:MAILING OF PUBLICATION FEE
:DUE

This is a decision on the petition filed April 3, 2003, to revive the instant nonprovisional application under the unintentional provisions of 37 CFR 1.137(f).

The petition under 37 CFR 1.137(f) is **GRANTED**.

Petitioner states that the instant nonprovisional application is the subject of an application filed in a foreign country on June 20, 2002. However, the U.S. Patent and Trademark Office was unintentionally not notified of this filing within 45 days subsequent to the filing of the subject application in a foreign country.

In view of the above, this application became abandoned pursuant to 35 U.S.C. § 122(b)(2)(B)(iii) and 37 CFR 1.213(c) for failure to timely notify the Office of the filing of an application in a foreign country, or under a multilateral international agreement, that requires publication of applications 18 months after filing.

A petition under 37 CFR 1.137(f) must be accompanied by:

(1) the reply which is met by the notification of such filing in a foreign country or under a multinational treaty;

(2) the petition fee as set forth in 37 CFR 1.17(m); and

(3) a statement that the entire delay in filing the required reply from the due date of the reply until the filing of a grantable petition was unintentional.

The instant petition has been found in compliance with 37 CFR 1.137(f). However, while the statement of unintentional delay does not comply with the rule, the statement presented will be construed as meaning that "the entire delay in filing the required reply

[Notice to Rescind Previous Nonpublication Request Under 35 U.S.C. § 122(b)(2)(B)(ii)] until the filing of a grantable petition was unintentional." Accordingly, the failure to timely notify the Office of a foreign or international filing within 45 days as provided by 35 U.S.C. § 122(b)(2)(B)(iii) is accepted as having been unintentionally delayed.

The previous Request and Certification under 35 U.S.C. § 122(b)(2)(B)(I) has been rescinded. A Corrected Filing Receipt which sets forth the projected publication date of July 24, 2003 accompanies this decision on petition.

A Notice of Allowability and a Notice of Allowance and Issue Fee Due were mailed in this case on February 13, 2003. However, in view of the nonpublication request filed with the application, the Notice of Allowance mailed in this case did not require the submission of a publication fee. Therefore, in view of the rescinding of the nonpublication request, a Notice of Publication Fee Due is being mailed concurrently with this decision under separate cover. Petitioner should note that payment of the publication fee is required to be filed within the period set forth in the Notice to avoid abandonment of the application.

This application is being forwarded to Publishing Division to await a reply to the Notice of Publication Fee Due mailed of even date.

Any inquiries concerning this decision may be directed to the undersigned at (703) 305-8680.

Frances Hicks

Frances Hicks
Petitions Examiner
Office of Petitions
Office of the Deputy Commissioner
for Patent Examination Policy

ATTACHMENT: Corrected Filing Receipt

UNITED STATES PATENT AND TRADEMARK OFFICE

COMMISSIONER FOR PATENTS
UNITED STATES PATENT AND TRADEMARK OFFICE
WASHINGTON, D.C. 20231
www.uspto.gov

Paper No. 20

FISH & NEAVE
1251 AVENUE OF THE AMERICAS
50TH FLOOR
NEW YORK NY 10020-1105

COPY MAILED

MAY 27 2003

OFFICE OF PETITIONS

In re Application of
JOSEPH F. PINKERTON
Application No. 09/885,367
Filed: June 20, 2001
Attorney Docket No. JP-1

ON PETITION

This is a decision on the petition filed May 15, 2003, to correct the assignment data on the Issue Fee Transmittal (Form PTOL-85(b)).

The petition is **granted**.

The application file is being forwarded to the Office of Patent Publication.

Telephone inquiries concerning this matter may be directed to the undersigned at (703) 306-5589.

Christina Tartera Donnell

Christina Tartera Donnell
Senior Petitions Attorney
Office of Petitions

UNITED STATES PATENT AND TRADEMARK OFFICE

Commissioner for Patents
United States Patent and Trademark Office
P.O. Box 1450
Alexandria, VA 22313-1450
www.uspto.gov

THOMAS, KAYDEN, HORSTEMEYER & RISLEY, LLP
100 GALLERIA PARKWAY, NW
STE 1750
ATLANTA GA 30339-5948

COPY MAILED
NOV 2 0 2006
OFFICE OF PETITIONS

In re Application of :
Berstein et al. :
Application No. 09/885,373 : ON PETITION
Filed: June 20, 2001 :
Attorney Docket Number: M-11680 US

This is a decision on the petition under 37 CFR 1.137(b), filed September 22, 2006, to revive the above-identified application.

This above-identified application became abandoned for failure to timely file a reply to the non-final Office Action of December 16, 2004. The non-final Office Action set a three (3) month shortened statutory period for reply. No extensions of time were obtained under the provisions of 37 CFR §1.136(a). Accordingly, this application became abandoned on March 17, 2005. A Notice of Abandonment was mailed on July 21, 2005.

This petition is hereby **Granted**.

The office hereby acknowledges the receipt of the amendment, and drawing(s) submitted with the instant petition.

This application is being forwarded to Technology Center 2600 for further processing.

Telephone inquiries concerning this matter should be directed to the undersigned at (571) 272-3215.

Charlema R. Grant

Charlema R. Grant
Petitions Attorney
Office of Petitions

UNITED STATES PATENT AND TRADEMARK OFFICE

COMMISSIONER FOR PATENTS
UNITED STATES PATENT AND TRADEMARK OFFICE
WASHINGTON, D.C. 20231
www.uspto.gov
DW 1P02

Paper No. 7

NOVOZYMES BIOTECH, INC.
1445 DREW AVE
DAVIS CA 95616

COPY MAILED

OCT 17 2002

OFFICE OF PETITIONS

In re Application of	:
Feng Xu	: DECISION GRANTING-IN-PART
Application No. 09/885,379	: PETITION
Filed: 19 June, 2001	:
Attorney's Docket No. 10046.200-US	:

This is a decision on the petition filed on 20 August, 2002, which is treated as a petition to withdraw the "Notice of Incomplete Nonprovisional Application" mailed on 19 June, 2002, and to accord the above-identified application a filing date of 19 June, 2001.

On 19 June, 2001, the application was filed, without drawings. Accordingly, on 19 June, 2002, Initial Patent Examination Division mailed a "Notice of Incomplete Nonprovisional Application" stating that, *inter alia*, the application had not been accorded a filing date because the application had been deposited without drawings. A two (2)-month period for reply was set.

In response, on 20 August, 2002, the present petition was filed, accompanied by two (2) sheets of drawings. Petitioners concede that no drawings were present among the application papers filed on 19 June, 2001, but state that the drawings do not include any new matter because this application incorporates by reference the entire disclosure of prior application No. 09/596,795.

Since no two (2) sheets of drawings were a part of the papers filed on 19 June, 2001, the application cannot be accorded a filing date with these sheets of drawings as a part of the original disclosure of this application.

However, a review of the record reveals that Claims 1-5, 7-10,

13, and 15-17 as originally filed and Claims 6, 12, 18, 22, 25, 28, and 32 as amended, are method claims. It has been PTO practice to treat an application that contains at least one process or method claim as an application for which a drawing is not necessary for an understanding of the invention under 35 U.S.C. 113 (first sentence).[1] Therefore, the present application is deemed to be an application which does not require a drawing for an understanding of the invention. Accordingly, the application, as filed, is entitled to a filing date without the drawings.

In view of the above, the "Notice" mailed 19 June, 2002, was mailed in error and is hereby withdrawn.

The petition is **granted** to the extent that the application will be accorded a filing date of 19 June, 2001, without drawings as a part of the original disclosure of this application

The two (2) sheets of drawings filed with the present petition will not be used for processing or examination, but will be retained in the application file.

Section 201.06(c) of the Manual of Patent Examining Procedure states that:

> . . . an applicant may incorporate by reference the prior application by including, in the application-as-filed, a statement that such specifically enumerated prior application or applications are "hereby incorporated herein by reference." The statement may appear in the specification or in the application transmittal letter. The inclusion of this incorporation by reference of the prior application(s) will permit an applicant to amend the continuing application to include any subject matter in such prior application(s), <u>without the need for a petition</u>. (emphasis supplied)

Obviously, in view of the incorporation by reference of the prior application, the drawings filed with the present petition are not new matter if they were a part of the disclosure of the prior application. If petitioners wish to have the drawings entered in the application, a preliminary amendment adding the drawings should be filed prior to the first Office action.

---

[1] MPEP 601.01(f).

The fee of $130.00 paid with the present petition will be refunded to counsel's deposit account, No. 50-1701.

Receipt of the declaration filed 20 August, 2002, is acknowledged.

The application is being returned to the Office of Initial Patent Examination for reprocessing with a filing date of 19 June, 2001, using the application papers filed on that date, and an indication in USPTO records that zero (0) sheets of drawings were present on filing.

Telephone inquiries specific to this matter should be directed to the undersigned at 703 308-6918.

DWood

Douglas I. Wood
Senior Petitions Attorney
Office of Petitions
Office of the Deputy Commissioner
for Patent Examination Policy

UNITED STATES PATENT AND TRADEMARK OFFICE

OIPE JC146
NOV 2 0 2002
PATENT & TRADEMARK OFFICE

NOVOZYMES BIOTECH, INC.
1445 DREW AVE
DAVIS CA 95616

RECEIVED
OCT 2 1 2002
E.B. PATENTS

COPY MAILED
OCT 1 7 2002
OFFICE OF PETITIONS

In re Application of	:
Feng Xu	: DECISION GRANTING-IN-PART
Application No. 09/885,379	: PETITION
Filed: 19 June, 2001	:
Attorney's Docket No. 10046.200-US	:

This is a decision on the petition filed on 20 August, 2002, which is treated as a petition to withdraw the "Notice of Incomplete Nonprovisional Application" mailed on 19 June, 2002, and to accord the above-identified application a filing date of 19 June, 2001.

On 19 June, 2001, the application was filed, without drawings. Accordingly, on 19 June, 2002, Initial Patent Examination Division mailed a "Notice of Incomplete Nonprovisional Application" stating that, *inter alia*, the application had not been accorded a filing date because the application had been deposited without drawings. A two (2)-month period for reply was set.

In response, on 20 August, 2002, the present petition was filed, accompanied by two (2) sheets of drawings. Petitioners concede that no drawings were present among the application papers filed on 19 June, 2001, but state that the drawings do not include any new matter because this application incorporates by reference the entire disclosure of prior application No. 09/596,795.

Since no two (2) sheets of drawings were a part of the papers filed on 19 June, 2001, the application cannot be accorded a filing date with these sheets of drawings as a part of the original disclosure of this application.

However, a review of the record reveals that Claims 1-5, 7-10,

13, and 15-17 as originally filed and Claims 6, 12, 1
28, and 32 as amended, are method claims. It has been
practice to treat an application that contains at least one
process or method claim as an application for which a drawing
not necessary for an understanding of the invention under 35
U.S.C. 113 (first sentence).[1] Therefore, the present application
is deemed to be an application which does not require a drawing
for an understanding of the invention. Accordingly, the
application, as filed, is entitled to a filing date without the
drawings.

In view of the above, the "Notice" mailed 19 June, 2002, was
mailed in error and is hereby withdrawn.

The petition is **granted** to the extent that the application will
be accorded a filing date of 19 June, 2001, without drawings as a
part of the original disclosure of this application

The two (2) sheets of drawings filed with the present petition
will not be used for processing or examination, but will be
retained in the application file.

Section 201.06(c) of the Manual of Patent Examining Procedure
states that:

> . . . an applicant may incorporate by reference the prior application by including, in the application-as-filed, a statement that such specifically enumerated prior application or applications are "hereby incorporated herein by reference." The statement may appear in the specification or in the application transmittal letter. The inclusion of this incorporation by reference of the prior application(s) will permit an applicant to amend the continuing application to include any subject matter in such prior application(s), <u>without the need for a petition</u>. (emphasis supplied)

Obviously, in view of the incorporation by reference of the prior
application, the drawings filed with the present petition are not
new matter if they were a part of the disclosure of the prior
application. If petitioners wish to have the drawings entered in
the application, a preliminary amendment adding the drawings
should be filed prior to the first Office action.

Donc 11/15/02

[1] MPEP 601.01(f).

Application No. 09/885,379

The fee of $130.00 paid with the present petition will be refunded to counsel's deposit account, No. 50-1701.

Receipt of the declaration filed 20 August, 2002, is acknowledged.

The application is being returned to the Office of Initial Patent Examination for reprocessing with a filing date of 19 June, 2001, using the application papers filed on that date, and an indication in USPTO records that zero (0) sheets of drawings were present on filing.

Telephone inquiries specific to this matter should be directed to the undersigned at 703 308-6918.

DWood

Douglas I. Wood
Senior Petitions Attorney
Office of Petitions
Office of the Deputy Commissioner
for Patent Examination Policy

UNITED STATES PATENT AND TRADEMARK OFFICE

Commissioner for Patents
United States Patent and Trademark Office
Washington, D.C. 20231
www.uspto.gov

Paper No. 6

STOEL RIVES LLP
900 SW FIFTH AVENUE
SUITE 2600
PORTLAND, OR 97204

COPY MAILED

JUN 05 2002

OFFICE OF PETITIONS

In re Application of :
Kenneth J. Hines :
Application No. 09/885,448 : DECISION ON PETITION
Filed: June 19, 2001 :
Attorney Docket No. 10488/11:1 :

This is a decision on "Petition under 37 CFR §1.182," filed February 19, 2002 (certificate of mailing January 30, 2002), requesting that the above-identified application be accorded a filing date of June 19, 2001, with Figures 56A-B, 57A-C, 59A-B, 63A-B, 64A-C, 65A-B and 66A-B as a part of the original application disclosure.

Application papers in the above-identified application were filed on June 19, 2001. However, on November 30, 2001, the Initial Patent Examination Division mailed applicant a "Notice of Omitted Item(s) in a Nonprovisional Application." Applicant was notified that the application papers had been accorded a filing date; however, Figures 56A-B, 57A-C, 59A-B, 63A-B, 64A-C, 65A-B and 66A-B described in the specification appeared to have been omitted.

In reply, applicant timely filed the instant petition, asserting that the drawing figures, though incorrectly labeled, were present in the application as filed. As filed, Figures 56, 59, 63, 64, 65 and 66 each contained distinct units that were not individually referenced with an Arabic numeral and a capital letter, but rather collectively referenced with a single figure designation. In support thereof, applicant submitted *inter alia* a copy of their return postcard for the application as filed June 19, 2001; a copy of seven sheets of corrected drawings; and a copy of a return receipt postcard for substitute drawings filed October 15, 2001.

It is obvious from the petition that no drawing was actually missing on June 19, 2001. Rather, the drawings of Figures 56A-B, 57A-C, 59A-B, 63A-B, 64A-C, 65A-B and 66A-B were simply mislabeled as a result of applicant's filing error. However, the "Notice of Omitted Item(s)" mailed November 30, 2001, was correct in stating that Figures 56A-B, 57A-C, 59A-B, 63A-B, 64A-C, 65A-B and 66A-B described in the specification <u>appeared</u> to have been omitted. Therefore, the "Notice" was properly mailed and will not be withdrawn.

Accordingly, the petition is **<u>DISMISSED</u>**.

The petition fee is required, since the petition was not necessary to correct any PTO error.

This application is being forwarded to the Office of Initial Patent Examination for processing with a filing date of June 19, 2001, using the drawings received on that date and the 7 sheets of corrected drawings filed on February 19, 2002 to correct the error in labeling of figures 56A-B, 57A-C, 59A-B, 63A-B, 64A-C, 65A-B and 66A-B.

Telephone inquiries related to this decision should be directed to Petitions Attorney Nancy Johnson at 703-305-0309.

Beverly M. Flanagan
Supervisory Petitions Examiner
Office of Petitions
Office of the Deputy Commissioner
for Patent Examination Policy

UNITED STATES PATENT AND TRADEMARK OFFICE

Commissioner for Patents
United States Patent and Trademark Office
P.O. Box 1450
Alexandria, VA 22313-1450
www.uspto.gov

STRAUB & POKOTYLO
788 SHREWSBURY AVENUE
TINTON FALLS, NJ 07724

COPY MAILED

SEP 22 2009

OFFICE OF PETITIONS

In re Application of :
Kaushik Ghosh, et al. :
Application No. 09/885,485 : DECISION ON PETITION
Filed: June 20, 2001 :
Attorney Docket No. Juniper-11 (JNP-0105) :

This is a decision on the petition under the unavoidable provisions of 37 CFR 1.137(a), filed August 5, 2009, to revive the above-identified application, which is being treated as a petition under 37 CFR 1.181, requesting withdrawal of the holding of abandonment in the above-identified application.

A review of the record shows that a decision by the Board of Appeals and Interference was mailed on July 7, 2009, which set a two month (2) shortened statutory period for reply. Accordingly, a reply was due on or before September 7, 2009. Accordingly, the Notice of Abandonment was premature because statutory period for reply was not expired.

The petition satisfies the requirements of 37 CFR 1.8(b). Accordingly, the holding of abandonment for failure to timely file a reply to the decision by the Board of Appeals and Interference of July 7, 2009 is hereby **withdrawn** and the application restored to pending status.

In view of the above, the petition is **GRANTED**.

The reply received with the petition will be accepted to have been electronically filed on August 5, 2009 is considered to be timely filed.

It is also noted that petitioner filed a petition under the unavoidable provisions of 37 CFR 1.137(a) along with the required petition fee of $540. The petition and petition fee is deemed unnecessary and will be refunded to petitioner's deposit account.

Telephone inquiries concerning this decision should be directed to April M. Wise at (571) 272-1642. All other inquiries concerning the examination or status of this application should be directed to the Technology Center.

This application is being referred to Technology Center AU 2117 for appropriate action by the Examiner in the normal course of business on the amendment submitted August 5, 2009.

/dab/
David Bucci
Petitions Examiner
Office of Petitions

UNITED STATES PATENT AND TRADEMARK OFFICE

Commissioner for Patents
United States Patent and Trademark Office
P.O. Box 1450
Alexandria, VA 22313-1450
www.uspto.gov

GOTTLIEB RACKMAN & REISMAN PC
270 MADISON AVENUE
8TH FLOOR
NEW YORK NY 10016-0601

MAILED

APR 07 2009

OFFICE OF PETITIONS

In re Application of	:	
Mordechai Kahana	:	
Application No. 09/885,495	:	DECISION ON PETITION
Filed: June 20, 2001	:	
Attorney Docket No. 5752/001	:	

This is a decision on the petition under the unintentional provisions of 37 CFR 1.137(b), filed March 6, 2009, to revive the above-identified application.

The application became abandoned for failure to reply in a timely manner to the Notice of Non-Compliant Amendment, mailed March 13, 2008 , which set a shortened statutory period for reply of one (1) month or thirty (30) days (whichever is later). No extensions of time under the provisions of 37 CFR 1.136(a) were obtained. Accordingly, by rules of operation the application became abandoned on April 14, 2008.

The petition satisfies the requirements of 37 CFR 1.137(b) in that petitioner has supplied (1) the reply in the form of an amendment, (2) the petition fee of $810, and (3) a proper statement of unintentional delay.

The petition is **GRANTED**.

Telephone inquiries concerning this decision should be directed to undersigned at (571) 272-1642. All other inquiries concerning the examination or status of this application should be directed to the Technology Center.

This application is being referred to Technology Center AU 3693 for appropriate action by the Examiner in the normal course of business on the reply received March 6, 2009.

April M. Wise
Petitions Examiner
Office of Petitions

UNITED STATES PATENT AND TRADEMARK OFFICE

UNITED STATES DEPARTMENT OF COMMERCE
United States Patent and Trademark Office
Address: COMMISSIONER FOR PATENTS
P.O. Box 1450
Alexandria, Virginia 22313-1450
www.uspto.gov

APPLICATION NO.	FILING DATE	FIRST NAMED INVENTOR	ATTORNEY DOCKET NO.	CONFIRMATION NO.
09/885,566	06/20/2001	Joachim Markert	70201	6188

23872 7590 03/02/2005

MCGLEW & TUTTLE, PC
1 SCARBOROUGH STATION PLAZA
SCARBOROUGH, NY 10510-0827

EXAMINER
MCANULTY, TIMOTHY P

ART UNIT	PAPER NUMBER
3682	

DATE MAILED: 03/02/2005

Please find below and/or attached an Office communication concerning this application or proceeding.

UNITED STATES PATENT AND TRADEMARK OFFICE

Commissioner for Patents
United States Patent and Trademark Office
P.O. Box 1450
Alexandria, VA 22313-1450
www.uspto.gov

MCGLEW & TUTTLE, PC
1 SCARBOROUGH STATION PLAZA
SCARBOROUGH, NY 10150-0827

In re Application of	: DECISION ON REQUEST
Joachim Markert	: UNDER 37 CFR 1.97
Application No. 09/885,566	: FOR CONSIDERATION
Filed: June 21, 2001	: OF INFORMATION
For: GEAR, PARTICULARLY FOR A ROBOT	: DISCLOSURE STATEMENT
	: AFTER ALLOWANCE

The request under 37 CFR 1.97(d)(2) for consideration of an information disclosure statement filed on December 2, 2004 after allowance has been:

( ) GRANTED.

(X) DENIED.

The request lacks:

( ) The required fee under 37 CFR 1.97(d)(3) and 1.17(I)(1).

(X) A proper certification as specified in 37 CFR 1.97(e)(1) or 1.97(e)(2).

The information disclosure statement has been placed of record in the file and will not be considered by the examiner. (see Federal Register 65 *Fed. Reg.* 54603 (September 8, 2000); Official Gazette 1238 *Off. Gaz. Pat Office* 77 (September 19, 2000) for rule changes to 37 CFR 1.97).

David A. Bucci, SPE
Art Unit 3682
(703) 308-3668

09/885609

SPE RESPONSE FOR CERTIFICATE OF CORRECTION

DATE : 2-9-07

Paper No.: 20080314

TO SPE OF : ART UNIT 2818

SUBJECT : Request for Certificate of Correction on Patent No.: 6849545

A response is requested with respect to the accompanying request for a certificate of correction.

Please complete this form and return with file, within 7 days to:
Palm location **7580, Certificates of Correction Branch – South Tower – 9A22**
If response is for an IFW, **return to employee (named below) via PUBSCofC Team in MADRAS.**
With respect to the change(s) requested, correcting Office and/or Applicant's errors, should the patent read as shown in the certificate of correction (COCIN)? No new matter should be introduced, nor should the scope or meaning of the claims be changed.

Thank You For Your Assistance

ROCHAUN JOHNSON
Certificates of Correction Branch
Tel. No. 703-308-9390 EXT 119

The request for issuing the above-identified correction(s) is hereby:
Note your decision on the appropriate box.

- ☒ **Approved** — All changes apply.
- ☐ **Approved in Part** — Specify below which changes **do not** apply.
- ☐ **Denied** — State the reasons for denial below.

Comments:

Steven Loke
SPE

2818
Art Unit

UNITED STATES PATENT AND TRADEMARK OFFICE

Commissioner for Patents
United States Patent and Trademark Office
P.O. Box 1450
Alexandria, VA 22313-1450
www.uspto.gov

SCHIFF HARDIN, LLP
PATENT DEPARTMENT
6600 SEARS TOWER
CHICAGO IL 60606-6473

COPY MAILED

MAR 1 1 2005

OFFICE OF PETITIONS

ON PETITION

In re Application of
Bocionek
Application No. 09/885,617
Filed: June 20, 2001
Attorney Docket No. P01,0208
For: MEDICAL SYSTEM ARCHITECTURE WITH AN APPARATUS FOR THE ACQUISITION AND PLAYBACK OF CURRENT PHOTOGRAPHIC IMAGES OR IMAGE SEQUENCES

This is a decision on the petition under 37 CFR 1.137(b), filed January 27, 2005 (certificate of mailing date January 24, 2005), to revive the above-identified application. In addition, the petition will be treated under 37 CFR 1.181 as a petition to withdraw the holding of abandonment.

The petition under 37 CFR 1.181 is **GRANTED**.

The petition under 37 CFR 1.137(b) is **DISMISSED AS MOOT**.

This application was held abandoned for failure to respond in a timely manner to the non-final Office action mailed April 27, 2004 that set a three (3) month extendable period for response. The Office contended that no reply was timely received. Therefore, the Office asserted that the application became abandoned on July 28, 2004. The filing of the instant petition precedes the mailing of a Notice of Abandonment.

Petitioner asserts that a proper response and two month extension of time were in fact timely deposited in USPS first class mail on September 27, 2004 and received in the Office on October 1, 2004. In support, petitioner submitted a copy of his return receipt postcard dated stamped October 1, 2004 by the Office and a copy of the "Amendment A".

The return postcard constitutes *prima facie* evidence that Amendment A was filed on October 1, 2004 (certificate of mailing date September 27, 2004). MPEP 503.

Unfortunately, only the postcard receipt cited the correct application number. Petitioner designated an incorrect application number on "Amendment A" and the transmittal letter for all the correspondence filed on October 1, 2004 (certificate of mailing date September 27, 2004). This resulted in the two month extension of time and "Amendment A" being placed in an incorrect application file.

Even though petitioner cited the wrong application number, under MPEP 502, " A minor error in the identification of the application can be corrected by the group provided the correct identification can be quickly discovered. Examples of minor errors are transposed numbers, typographical errors, and listing the parent application number." The undersigned believes that a relatively simple review of Office records would have yielded the correct application number to enable the Office to match the October 1, 2004 (certificate of mailing date September 27, 2004)correspondence with this application file. A cross-referencing of any of the accurate identifiers found on the transmittal with Office database records would have revealed the typographical error.

Therefore, the response to the April 27, 2004 non-final Office action was timely filed. Accordingly, the petition under 37 CFR 1.181 is **granted**, the Notice of Abandonment is hereby vacated, and the holding of abandonment withdrawn. The original papers filed on October 1, 2004 (certificate of mailing date September 27, 2004) will be transferred to application no. 09/885,617.

Regarding fees, as the petition to revive under 37 CFR 1.137(b) is **dismissed as moot**, the $1,500.00 petition fee submitted with the instant petition will be credited to deposit account no. 50-1519. The two month extension of time fee submitted on October 1, 2004 (certificate of mailing date September 27, 2004) will be transferred to this application.

The application file will be forwarded to Technology Center GAU 2621 for processing of the October 1, 2004 (certificate of mailing date September 27, 2004) amendment.

Telephone inquiries pertaining to this matter may be directed to the undersigned at (571) 272-3230.

E. Shirene Willis

E. Shirene Willis
Senior Petitions Attorney
Office of Petitions
Office of the Deputy Commissioner
for Patent Examination Policy

UNITED STATES PATENT AND TRADEMARK OFFICE

COMMISSIONER FOR PATENTS
UNITED STATES PATENT AND TRADEMARK OFFICE
WASHINGTON, D.C. 20231
www.uspto.gov

Paper No. 15

LADAS & PARRY
26 WEST 61ST STREET
NEW YORK, NY 10023

COPY MAILED

JAN 0 8 2003

OFFICE OF PETITIONS

In re Application of
Kazuhiro Okada
Application No. 09/885,620
Filed: June 20, 2001
Attorney Docket No. U013510-6

ON PETITION

This is a decision on the petition under 37 CFR 1.313(c)(2), filed January 7, 2003, to withdraw the above-identified application from issue after payment of the issue fee.

It is noted that the petition indicates that the $130.00 petition fee is attached in the form of a check therefor; however, no check was found attached. Accordingly, the $130.00 petition fee is being charged to counsel's deposit account.

The petition is **GRANTED**.

The above-identified application is withdrawn from issue for consideration of a submission under 37 CFR 1.114 (request for continued examination). See 37 CFR 1.313(c)(2).

Petitioner is advised that the issue fee paid on November 26, 2002, in the above-identified application cannot be refunded. If, however, the above-identified application is again allowed, petitioner may request that it be applied towards the issue fee required by the new Notice of Allowance. [1]

After receipt of the file in the Office of Petitions, the file will be forwarded to Technology Center AU 2856 for further processing of the request for continued examination under 37 CFR 1.114.

Sherry D. Brinkley
Petitions Examiner
Office of Petitions
Office of the Deputy Commissioner
for Patent Examination Policy
(703) 305-9220

---

[1]The request to apply the issue fee to the new Notice must be made in writing and should be accompanied by the new Issue Fee Transmittal Form PTOL-85(b), along with a copy of this decision. Additionally, if the issue fee has increased from the previously paid issue fee, the balance due must be submitted. **Failure to *timely* r qu st *in writing* that the previously paid issue fee be applied towards the new Notic and payment of any balance due will result in the abandonm nt of the application.**

#5

UNITED STATES PATENT AND TRADEMARK OFFICE

COMMISSIONER FOR PATENTS
UNITED STATES PATENT AND TRADEMARK OFFICE
P.O. BOX 1450
ALEXANDRIA, VA 22313-1450
www.uspto.gov

MAILED

APR 0 7 2004

TECHNOLOGY CENTER 2100

Paper No. 5

Linda M. Shudy
KENYON & KENYON
One Broadway
New York, NY 10004

In re Application of:
Amir David Kolsky
Application No. 09/885,669
Filed: June 19, 2001
For: METHOD AND SYSTEM FOR A COMMUNICATION SCHEME OVER HETEROGENEOUS NETWORKS

DECISION ON REQUEST TO WITHDRAW AS ATTORNEY OR AGENT

This is a decision on the Request To Withdraw from Representation filed March 08, 2004.

A grantable request to withdraw as attorney of record should indicate thereon the present mailing addresses of the attorney(s) who is/are withdrawing from the record and of the applicant. The request for withdrawal must be signed by every attorney seeking to withdraw or contain a clear indication that one attorney is signing on behalf of another/others. A request to withdraw will not be approved unless at least 30 (thirty) days would remain between the date of approval and the later of the expiration date of a time to file a response or the expiration date of the maximum time period which can be extended under 37 C.F.R. § 1. 136(a). The effective date of withdrawal being the date of decision and not the date of request. See M.P.E.P. § 402.06. 37 C.F.R. § 1.36 further requires that the applicant or patent owner be notified of the withdrawal of the attorney or agent.

The request filed March 08, 2004 meets all the requirements. Accordingly the request is **GRANTED**.

All future communications from the Office will be directed to the below-listed address until otherwise notified by applicant. This correspondence address is provided by the withdrawn attorney(s). Applicant is reminded of the obligation to promptly notify the Patent and Trademark Office (Office) of any change in correspondence address to ensure receipt of all communications from the Office.

James R. Matthews

FM Vincent N. Trans
Special Program Examiner
Technology Center 2100
Computer Architecture, Software, and
Information Security
703-305-9750

cc: Nitzzan Daube
MOBILESPEAR
P.O. Box 3489
Ramat-Gan, 52136 Israel

UNITED STATES PATENT AND TRADEMARK OFFICE

Commissioner for Patents
United States Patent and Trademark Office
Washington, D.C. 20231
www.uspto.gov

Paper No. 11

KILPATRICK STOCKTON LLP
607 14TH STREET, N.W.
SUITE 900
WASHINGTON, DC 20005

COPY MAILED

MAY 0 9 2002

OFFICE OF PETITIONS

In re Application of :
Luke Chu and Mark Sullivan :
Application No. 09/885,674 :
Filed: June 20, 2001 :
Title: SYSTEM AND METHOD FOR :
ADMINISTRATION OF NETWORK FINANCIAL:
TRANSACTION TERMINALS :

DECISION ACCORDING STATUS UNDER 37 CFR 1.47(a)

This is in response to the "Petition under 37 CFR 1.47(a)," filed February 12, 2002.

The petition under 37 CFR 1.47(a) is **GRANTED**.

The above-identified application was filed on June 20, 2001, without an executed oath or declaration. Luke Chu and Mark Sullivan were named as joint inventors. Accordingly, on August 16, 2001, applicants were mailed a "Notice to File Missing Parts of Application - Filing Date Granted," requesting an executed oath or declaration in compliance with §1.63, and a surcharge for its late filing under §1.16(e). In reply, applicant filed the instant petition, made timely by an accompanying petition for a four-month extension of time (and fee); paid both the petition fee and the surcharge for late filing of the declaration; and submitted a declaration executed by inventor Luke Chu on behalf of himself and on behalf of non-signing inventor Mark Sullivan.

A grantable petition under 37 CFR 1.47(a) requires (1) proof that the non-signing inventor cannot be reached or refuses to sign the oath or declaration after having been presented with the application papers (specification, claims and drawings); (2) an acceptable oath or declaration in compliance with 35 U.S.C. §§115 and 116; (3) the petition fee; and (4) a statement of the last known address of the non-signing inventor.

By declaration of patent attorney George T. Marcou, rule 47 applicant set forth the facts relied on to conclude that inventor Sullivan refuses to join in the application. Per attorney Marcou this refusal is shown by inventor Sullivan's conduct; he has not responded to the request to sign the declaration. Accompanying attorney Marcou's statement is the following supporting documentary evidence: 1) a copy of the letter sent via Federal Express to inventor Sullivan on January 11, 2002 forwarding *inter alia* a copy of the application as filed and a declaration for patent for his signature; and 2) a copy of the Federal Express receipt showing receipt of the package at the inventor's last known address by "M. Sullivan" on January 14, 2002. Petitioner has shown that the non-signing inventor has refused to join in the above-identified application after having been presented with the application papers.

The declaration filed February 12, 2002, and the petition have been reviewed and found in compliance with 37 CFR 1.47(a).

This application is hereby accorded Rule 1.47(a) status.

As provided in new Rule 1.47(c), this Office will forward notice of this application's filing to the non-signing inventor at the address given in the declaration. Notice of the filing of this application will also be published in the Official Gazette.

The application file is being returned to the Office of Initial Patent Examination for completion of pre-examination processing.

Telephone inquiries regarding this decision should be directed to Petitions Attorney Nancy Johnson at (703) 305-0309.

for

Beverly M. Flanagan
Supervisory Petitions Examiner
Office of Petitions
Office of the Deputy Commissioner
for Patent Examination Policy

UNITED STATES PATENT AND TRADEMARK OFFICE

Commissioner for Patents
United States Patent and Trademark Office
P.O. Box 1450
Alexandria, VA 22313-1450
www.uspto.gov
DIW May-06

BROWN, RAYSMAN, MILLSTEIN, FELDER & STEINER LLP
900 THIRD AVENUE
NEW YORK NY 10022

COPY MAILED
MAY 0 9 2006
OFFICE OF PETITIONS

In re Application of	:	
Khan et al.	:	DECISION ON PETITION
Application No. 09/885,681	:	TO WITHDRAW HOLDING OF
Filed: 20 June, 2001	:	ABANDONMENT
Atty. Docket No. 4033/2A	:	

This is a decision on the petition, filed on 14 April, 2005 (certificate of mailing date 11 April, 2005), to withdraw the holding of abandonment in the above-identified application.

The Office apologizes for the delay in responding to the present petition.

The application was held abandoned for failure to respond in a timely manner to the non-final Office action mailed on 4 December, 2003. A Notice of Abandonment was mailed on 10 January, 2005.

Petitioners assert that a proper response was in fact timely filed in the form of an amendment and response to the non-final Office action and an extension of time. In support of the petition, petitioners submitted a copy of a date-stamped post card receipt acknowledging receipt of the response to the Office action dated 4 December, 2003, a request for a three (3) month extension of time, and a check for $475.00 for the extension of time fee in the United States Patent and Trademark Office (Office) on 7 June, 2004. Additionally, petitioners have submitted a copy of the amendment and request for extension of time with the present petition.

Although receipt of the $475.00 fee for the extension of time has been entered in Office financial records, no copy of the amendment or request for extension of time filed on 7 June, 2004 is located in the official file, petitioners' response to the restriction or election requirement is not of record in the file and cannot be located. However, M.P.E.P. § 503 states, "[a] post card receipt which itemizes and properly identifies the papers

which are being filed serves as *prima facie* evidence of receipt in the PTO of all the items listed thereon on the date stamped thereon by the PTO." Accordingly, it is concluded that the amendment and request for a three (3) month extension of time was received in the Office but was not matched with the application file.

The date-stamped on the post card of 7 June, 2004, is after the due date for the response. However, under 37 C.F.R. § 1.8(a)(1) correspondence is considered timely if: (1) the correspondence is mailed or transmitted prior to expiration of the set period for response by being properly addressed to the Patent and Trademark Office as set out in 37 C.F.R. § 1.1(a) and deposited with the U.S. Postal Service with sufficient postage as first class mail or transmitted to the Patent and Trademark Office in accordance with 37 C.F.R. § 1.6(d); and (2) the correspondence includes a certificate for each piece of correspondence stating the date of deposit or transmission. The person signing the certificate should have a reasonable basis to expect that the correspondence would be mailed or transmitted on or before the date indicated.

The "Amendment and Response to Office Action" filed with the present petition bears a proper certificate of mailing, dated 4 June, 2004, in compliance with the requirements of 37 C.F.R. § 1.8(a)(1) as set forth above. Accordingly, the Notice of Abandonment is hereby vacated and the holding of abandonment withdrawn.

The petition is **GRANTED**.

The application file will be referred to the Technology Center's technical support staff for entry of the response. Thereafter, the application file will be referred to the examiner for action in due course.

Telephone inquiries concerning this matter may be directed to the undersigned at (571)272-3231.

D Wood

Douglas I. Wood
Senior Petitions Attorney
Office of Petitions

UNITED STATES PATENT AND TRADEMARK OFFICE

Commissioner for Patents
United States Patent and Trademark Office
P.O. Box 1450
Alexandria, VA 22313-1450
www.uspto.gov

K&L GATES LLP
P.O. BOX 1135
CHICAGO IL 60690

MAILED

JUL 28 2009

OFFICE OF PETITIONS

In re Application of	:
Kahn et al.	:
Application No. 09/885,681	: DECISION ON PETITION
Filed: June 20, 2001	:
Attorney Docket No. 0117474-00020	:

This is a decision on the petition under the unintentional provisions of 37 CFR 1.137(b), filed June 23, 2009, to revive the above-identified application.

The petition is **GRANTED**.

This application became abandoned for failure to timely pay the issue and publication fees on or before March 23, 2009, as required by the Notice of Allowance and Fee(s) Due mailed December 23, 2008. Accordingly, the date of abandonment of this application is March 24, 2009. A Notice of Abandonment was mailed April 17, 2009.

The petition satisfies the requirements of 37 CFR 1.137(b) in that petitioner has supplied (1) the reply in the form of payment of the issue fee of $755.00 and publication fee of $300.00; (2) the petition fee of $810.00; and (3) a proper statement of unintentional delay.

It is not apparent whether the statement of unintentional delay was signed by a person who would have been in a position of knowing that the **entire** delay in filing the required reply from the due date for the reply until the filing of a grantable petition pursuant to 37 CFR 1.137(b) was unintentional. Nevertheless, in accordance with 37 CFR 10.18, the statement is accepted as constituting a certification of unintentional delay. However, in the event that petitioner has no knowledge that the delay was unintentional, petitioner must make such an inquiry to ascertain that, in fact, the delay was unintentional. If petitioner discovers that the delay was intentional, petitioner must notify the Office.

Telephone inquiries concerning this decision should be directed to the undersigned at (571) 272-7751.

This application is being referred to the Office of Data Management for processing into a patent.

Joan Olszewski
Petitions Examiner
Office of Petitions

UNITED STATES PATENT AND TRADEMARK OFFICE

COMMISSIONER FOR PATENTS
UNITED STATES PATENT AND TRADEMARK OFFICE
WASHINGTON, D.C. 20231
www.uspto.gov

Paper No. 9

Charles L. Warner II
TROUTMAN SANDERS LLP
Suite 5200
600 Peachtree Street, N.E.
Atlanta, GA 30308-2216

MAILED

SEP 23 2003

Technology Center 2100

In re Application of: Aleksander Szlam, et al.	)	
Application No. 09/885,717	)	
Filed: June 20, 2001	)	**DECISION ON REQUEST FOR**
For: DYNAMIC HELP OPTION FOR	)	**WITHDRAWAL AS ATTORNEY**
INTERNET CUSTOMERS	)	

This is a decision on the Request To Withdraw from Representation filed September 4, 2003.

A grantable request to withdraw as attorney of record should indicate thereon the present mailing addresses of the attorney(s) who is/are withdrawing from the record and of the applicant. The request for withdrawal must be signed by every attorney seeking to withdraw or contain a clear indication that one attorney is signing on behalf of another/others. A request to withdraw will not be approved unless at least 30 (thirty) days would remain between the date of approval and the later of the expiration date of a time to file a response or the expiration date of the maximum time period which can be extended under 37 C.F.R. § 1. 136(a). The effective date of withdrawal being the date of decision and not the date of request. See M.P.E.P. § 402.06. 37 C.F.R. § 1.36 further requires that the applicant or patent owner be notified of the withdrawal of the attorney or agent.

The request is **GRANTED**.

All future communications from the Office will be directed to the below-listed address until otherwise notified by applicant. This correspondence address is provided by the withdrawn attorney(s). Applicant is reminded of the obligation to promptly notify the Patent and Trademark Office (Office) of any change in correspondence address to ensure receipt of all communications from the Office.

Vincent N. Trans
Special Programs Examiner
Technology Center 2100
Computer Architecture and Software
(703) 305-9750

cc: Melita International, Inc.
Attn: Legal/Patent Department
5051 Peachtree Corners Circle
Norcross, GA 30092-2500

UNITED STATES PATENT AND TRADEMARK OFFICE

Commissioner for Patents
United States Patent and Trademark Office
P.O. Box 1450
Alexandria, VA 22313-1450
www.uspto.gov

BOURQUE & ASSOCIATES, P.A.
835 HANOVER STREET
SUITE 303
MANCHESTER, NH 03104

COPY MAILED
JUN 29 2005
OFFICE OF PETITIONS

In re Application of	:	
Szlam, et al.	:	
Application No. 09/885,717	:	ON PETITION
Filed: June 20, 2001	:	
Attorney Docket No. INVE16US	:	

This is a decision on the petition under 37 CFR 1.137(b), filed May 9, 2005, to revive the above-identified application.

The petition is **GRANTED**.

This application became abandoned for failure to timely file a proper reply to the non-final Office action mailed March 29, 2004. Accordingly, this application became abandoned on June 30, 2004. A Notice of Abandonment was mailed on March 17, 2005.

Pursuant to 37 CFR 1.136, an extension of time must be filed prior to the expiration of the maximum period obtainable for reply to avoid abandonment. Accordingly, since the $2160.00 extension of time submitted with the petition on May 9, 2005 was subsequent to the maximum period obtainable for reply, this fee is unnecessary and will be credited to petitioner's deposit account.

The file is being forwarded to Technology Center 2100, for review of the amendment, filed May 9, 2005, *in due course*.

Telephone inquiries concerning this matter may be directed to the undersigned at (571) 272-3228.

Edward J. Tannouse
Petitions Attorney
Office of Petitions/Patent
United States Patent and Trademark Office

UNITED STATES PATENT AND TRADEMARK OFFICE

COMMISSIONER FOR PATENTS
UNITED STATES PATENT AND TRADEMARK OFFICE
P.O. BOX 1450
ALEXANDRIA, VA 22313-1450
www.uspto.gov

Paper No. 14

Andrew D. Gathy
Sierra Patent Group, Ltd.
P.O. Box 6149
Stateline NV 89449

COPY MAILED
JUN 25 2004
OFFICE OF PETITIONS

In re Application of	:	
Pierfrancesco La Mura et al	:	
Application No. 09/885,720	:	DECISION GRANTING PETITION
Filed: June 19, 2001	:	UNDER 37 CFR 1.137(b)
Attorney Docket No. COM-003CIA	:	

This is a decision on the petition, filed May 13, 2003, which is being treated as a petition under 37 CFR 1.137(b) to revive the instant nonprovisional application for failure to timely notify the U.S. Patent and Trademark (USPTO) of the filing of an application in a foreign country, or under a multinational treaty that requires publication of applications eighteen months after filing. *See* 37 CFR 1.137(f).

The petition is **GRANTED**.

Petitioner states that the instant nonprovisional application is the subject of an application filed in an eighteen month publication country on June 12, 2002. However, the USPTO was unintentionally not notified of this filing within 45 days subsequent to the filing of the subject application in an eighteen month publication country.

In view of the above, this application became abandoned pursuant to 35 U.S.C. § 122(b)(2)(B)(iii) and 37 CFR 1.213(c) for failure to timely notify the Office of the filing of an application in a foreign country or under a multilateral international agreement that requires publication of applications 18 months after filing.

A petition to revive an application abandoned pursuant to 35 U.S.C. 122(b)(2)(B)(iii) for failure to notify the USPTO of a foreign filing must be accompanied by:

(1) the required reply which is met by the notification of such filing in a foreign country or under a multinational treaty;

(2) the petition fee as set forth in 37 CFR 1.17(m); and
(3) a statement that the entire delay in filing the required reply from the due date of the reply until the filing of a grantable petition was unintentional.

The instant petition has been found to be in compliance with 37 CFR 1.137(b). Accordingly, the failure to timely notify the USPTO of a foreign or international filing within 45 days after the date of filing of such foreign or international application as provided by 35 U.S.C. § 122(b)(2)(B)(iii) and 37 CFR 1.213(c) is accepted as having been unintentionally delayed.

Any inquiries concerning this decision may be directed to the undersigned at (703) 305-8680.

This application is being forwarded to Technology Center Art Unit 3624 for examination in due course.

Frances Hicks

Frances Hicks
Petitions Examiner
Office of Petitions
Office of the Deputy Commissioner
for Patent Examination Policy

UNITED STATES PATENT AND TRADEMARK OFFICE

Commissioner for Patents
United States Patent and Trademark Office
P.O. Box 1450
Alexandria, VA 22313-1450
www.uspto.gov

Paper No. 13

KENNETH D'ALESSANDRO
SIERRA PATENT GROUP, LTD.
P O BOX 6149
STATELINE, NV 89449

COPY MAILED
JUN 2 5 2004
OFFICE OF PETITIONS

In re Application of	:	
La Mura et al.	:	
Application No. 09/885,720	:	DECISION ON PETITION
Filed: June 19, 2001	:	
Attorney Docket No. COM-003CIA	:	

This is in response to the communication entitled "Request for Refund of Petition Fee," filed June 2, 2003, which is being treated as (1) a petition under 37 CFR 1.181 for refund, and (2) a petition under 37 CFR 1.183 seeking waiver of 37 CFR 1.4(b).

The petition considered under 37 CFR 1.181 for a refund is **dismissed**.

The petition considered under 37 CFR 1.183 as a request for waiver of the rules is **dismissed.**

BACKGROUND

The above-identified application papers were deposited on June 19, 2001. With the filing, applicant included a "Request for Nonpublication Pursuant to 37 C.F.R. § 1.213," which reads:

> Applicant hereby requests that this application not be published under 35 U.S.C. § 122(b). Applicant certifies that the invention disclosed in the application has not been and will not be the subject of an application filed in another country, or under a multi-lateral agreement, that requires publication at eighteen months after filing.

However, on August 20, 2001, the office of Initial Patent Examination mailed a Notice indicating that while the instant application papers were entitled to a filing date, the application remained incomplete and the deficiencies noted therein had to be supplied within an extendable two month period or the application would become abandoned.

On September 28, 2001, applicant filed the missing items required by the Notice of August 20, 2001.

On June 12, 2002, applicant filed an international treaty (PCT) application that apparently claimed priority benefit of the instant application.

On June 19, 2002, applicant filed a "Transmittal Letter for Request to Rescind Nonpublication," along with Form PTO/SB/36 (11-00). This request stated that "I hereby rescind the previous request that the above-identified Application not be published under 35 U.S.C. 122(b)." The rescission does not make any mention of the filing of a PCT application on June 12, 2002.

On May 13, 2003, applicant filed a petition to revive under 37 CFR 1.137(f) and stated that the invention disclosed in the above-identified application was filed in a foreign country or under international treaty entailing 18 month publication on October 5, 2001. Since applicants first provided the notice of foreign filing as required by 35 U.S.C. 122(b)(2)(B)(iii) and 37 CFR 1.213(c) when applicant filed the petition to revive on May 12, 2003, the notice of the foreign filing as required by 35 U.S.C. 122(b)(2)(B)(iii) was not filed within 45 days of the date of filing of the international application. As such, the above-identified application became abandoned midnight Sunday November 27, 2003.

On June 2, 2003, the instant petition was filed.

The petition under 37 CFR 1.137(f) filed May 13, 2003, is being granted in a decision mailed the same date as the instant petition, which will excuse applicant's unintentional delay in filing the necessary timely notification.

STATUTE AND REGULATION

35 U.S.C. § 122b(2)(B) states, in pertinent part:

> (i) If an applicant makes a request upon filing, certifying that the invention disclosed in the application has not and will not be the subject of an application filed in another country, or under a multilateral international agreement, that requires publication of applications 18 months after filing, the application shall not be published as provided in paragraph (1).

(ii) **An applicant may rescind a request made under clause (i) at any time.**

(iii) An applicant who has made a request under clause (i) but who subsequently files, in a foreign country or under a multilateral international agreement specified in clause (i), an application directed to the invention disclosed in the application filed in the Patent and Trademark Office, shall notify the Director of such filing not later than 45 days after the date of the filing of such foreign or international application. **A failure of the applicant to provide such notice within the prescribed period shall result in the application being regarded as abandoned**, unless it is shown to the satisfaction of the Director that the delay in submitting the notice was unintentional.

(iv) If an applicant rescinds a request made under clause (i) **or** notifies the Director that an application was filed in a foreign country or under a multilateral international agreement specified in clause (i), the application shall be published in accordance with the provisions of paragraph (1) on or as soon as is practical after the date that is specified in clause (i).[1]

37 CFR 1.213 states:

(a) If the invention disclosed in an application has not been and will not be the subject of an application filed in another country, or under a multilateral international agreement, that requires publication of applications eighteen months after filing, the application will not be published under 35 U.S.C. 122(b) and § 1.211 provided:

(1) A request (nonpublication request) is submitted with the application upon filing;

(2) The request states in a conspicuous manner

that the application is not to be published under 35 U.S.C. 122(b);

(3) The request contains a certification that the

---

[1] Emphasis added.

invention disclosed in the application has not been and will not be the subject of an application filed in another country, or under a multilateral international agreement, that requires publication at eighteen months after filing; and

(4) The request is signed in compliance with § 1.33(b).

(b) The applicant may rescind a nonpublication request at any time. A request to rescind a nonpublication request under paragraph (a) of this section must:

(1) Identify the application to which it is directed;

(2) State in a conspicuous manner that the request that the application is not to be published under 35 U.S.C. 122(b) is rescinded; and

(3) Be signed in compliance with § 1.33(b).

(c) If an applicant who has submitted a nonpublication request under paragraph (a) of this section subsequently files an application directed to the invention disclosed in the application in which the nonpublication request was submitted in another country, or under a multilateral international agreement, that requires publication of applications eighteen months after filing, the applicant must notify the Office of such filing within forty-five days after the date of the filing of such foreign or international application. The failure to timely notify the Office of the filing of such foreign or international application shall result in abandonment of the application in which the nonpublication request was submitted (35 U.S.C. 122(b)(2)(B)(iii)).

OPINION

Applicant requests a refund for the following reasons:

1. The position taken by the USPTO that a transmittal letter to the Receiving Office (USPTO) does not constitute notice of such filing because of the provisions of 37 CFR 1.4(b) is legally incorrect.

2. The statute, as well as the rule, does not specify the manner in which such notice of foreign filing be given to the Director, but merely provides that notice of a foreign filing be given.

3. Neither the Notice of Proposed Rulemaking, 65 FR 17946, 17957 (2000), nor the final rulemaking notice in the Official Gazette of October 10, 2000, specify or imply any requirement that the statutory notice to the Director be captioned as or even placed in the file of the United States patent application.

4. Lastly, applicant submits that the filing of the PCT request in the PCT Receiving Office of the United States serves as the notice to the Director of the filing of the PCT application as required by both 35 U.S.C. § 122(b)(2)(B)(iii) and 37 CFR 1.213(c); that the filing of any paper in the USPTO constitutes actual notice to the Director of the filing of that paper.

Applicant additionally requests suspension of the provisions of 37 CFR 1.4(b) under 37 CFR 1.183, which latter issue will be treated first.

<u>With respect to the petition for waiver under 37 CFR 1.183:</u>

Since this petition is not accompanied by the $130 fee required by 37 CFR 1.17(h) for filing a petition under 37 CFR 1.183, no consideration on the merits of the petition will be given.

<u>With respect to the request for refund:</u>

The legislative history relevant to the instant issues, as reported in the Congressional Record indicates that, if applicant has requested nonpublication because the application will not be filed "in a foreign country with a publication requirement, subparagraph (B)(iii) imposes a duty on the applicant to notify the Director of this fact. An unexcused failure to notify the Director will result in abandonment of the application." <u>See</u> 145 Cong. Rec. S14,718 (November 17, 1999).

35 U.S.C. 122(b)(2)(B)(iii) provides that if an applicant informs the Office that the application has not been and will not be "foreign filed," such an applicant must inform the Office of the subsequent foreign filing no later than 45 days after foreign filing or the application will be treated as abandoned. Since applicant did <u>not</u> provide the required notice, the above-identified application is properly treated as abandoned, and the

fees for the necessary remedy fell due. 35 U.S.C. § 42(d) permits a refund of "any fee paid by mistake or any amount paid in excess of that required." Thus, the United States Patent and Trademark Office (USPTO) may refund: (1) a fee paid when no fee is required (a fee paid by mistake); or (2) any fee paid in excess of the amount of fee that is required. See Ex Parte Grady, 59 USPQ 276, 277 (Comm'r Pats. 1943) (the statutory authorization for the refund of fees is applicable only to a mistake relating to fee payment). However, petitioner has not shown, nor does inspection of the record reveal, that the fees in question were paid either in excess or by mistake. Since the fees were paid in the proper amounts, there is no question as to whether the fees were laid in excess. Further, since this application became abandoned by operation of 35 U.S.C. 122(b), the petition fee for revival of this application was not a fee paid by mistake. As such, no refund is due applicant.

Contrary to petitioner's contentions, a review of the file record fails to disclose that applicant's rescission notice filed June 19, 2002, made any mention of a foreign or international treaty filing that had or would occur. Applicant's rescission notice simply does not state that the form should be treated as notice of foreign filing pursuant to 35 U.S.C. 122(b)(2)(B)(iii) and 37 CFR 1.213(c). Nothing in a rescission of a nonpublication request implies that the U.S. application has been or will be foreign filed. Most patent applications filed on or after November 29, 2000, will be published, unless applicant files a request for nonpublication in compliance with 37 CFR 1.213(a). A nonpublication request is required to contain a certification that "the invention disclosed in the application has not been and will not be the subject of an application filed in another country, or under a multilateral international agreement that requires publication at eighteen months after filing." Applicants who do not plan to file in another country are not required to file such a certification, and given that provisional rights (see 35 U.S.C. § 154(d)) may become available to those who have their patent applications publish, some applicants who do not plan to file in another country may elect to have their application published to be eligible for provisional rights. As a result, the filing of a rescission of a nonpublication request does not imply that the invention has been or will be foreign filed, and instead simply denotes that applicant now desires to have the application published in the United States, which of course may confer provisional rights.

Furthermore, if a mere notice of rescission could properly be construed as a concomitant notice of foreign filing, without any

reference to a foreign filing, then 35 U.S.C. § 122(b)(2)(B)(iii) would have included some reference to a rescission. For example, the statute could have provided that the "rescission specified in clause (ii) must be filed no later than 45 days after the date of foreign filing." Instead, clause (iii) specified that an "applicant who has made a request under clause (i)...shall notify the Director of such filing no later than 45 days after the date of such filing."

Implicit in providing notice of foreign filing is a rescission of the nonpublication request for both actions will result in publication of the application (see 35 U.S.C. 122(b)(2)(B)(iv)), but a request to publish a patent application (to rescind a nonpublication request) does not communicate any information about, or is otherwise necessarily linked to, a foreign or international treaty filing. Thus, the statute clearly identifies rescission of a nonpublication request and notification of a foreign filing as two separate acts, and a rescission in and of itself cannot be construed as notice of foreign filing.

Here, applicant's request to rescind the previously filed nonpublication request did not provide any notice of the foreign filing. Accordingly, it did not comply with 35 U.S.C. 122(b)(2)(B)(iii). The Office has no authority pursuant to 37 CFR 1.183 to treat a rescission under 35 U.S.C. 122(b)(2)(B)(ii) as the notice of foreign filing required by 35 U.S.C. 122(b)(2)(B)(iii). In addition, the Office has no authority to waive the 45 day period set forth in 35 U.S.C. 122(b)(2)(B)(iii), as a result, the application must be regarded as abandoned. **These are statutory requirements and a statutory requirement can not be waived under the provisions of 37 CFR 1.183.**

As to the arguments that no specific notice is required and that filing an international [PCT] application in the United States Receiving Office was the required notification of foreign filing to the Director, these arguments are also not persuasive. 37 CFR 1.213(c) requires the applicant to provide notice, and 37 CFR 1.4(b) provides that each application must be complete in itself. While petitioner contends that 37 CFR 1.213 does not specify that the notification have been filed in this application, 37 CFR 1.4(b) does require that this file be complete in of itself. The PCT filing transmittal was not a paper captioned for this application within the meaning of 37 CFR 1.5.

An international application would not be placed into the file of an application that it relies upon for the benefit of an earlier filing date, and so applicant was required to file a separate paper pursuant to 37 CFR 1.4(b) in the above-identified application for the required notice to be properly given, at a bare minimum. Therefore, the mere filing of a PCT application is not the notification required by 35 U.S.C. § 122(b)(2)(B)(iii) and 37 CFR 1.213(c). Petitioner's attention is also directed to 37 CFR 1.4(c), which states:

> Since different matters may be considered by different branches or sections of the United States Patent and Trademark Office, each distinct subject, inquiry or order must be contained in a separate paper to avoid confusion and delay in answering papers dealing with different subjects.

Pursuant to 37 CFR 1.4(c), the separate paper was required to address a distinct subject, so a notification of foreign filing was required to be on a separate paper from another matter (such as a transmittal of a new application). 37 CFR 1.4(b) and 1.4(c) refute petitioner's contention that notice to the PCT Receiving Office operation within the USPTO is the required notice the national stage processing area(s) of a foreign or treaty filing, and likewise answer petitioner's assertion that 35 U.S.C. 122 (b) and 37 CFR 1.213 do not require that the applicant inform the USPTO of the later treaty or foreign filing by filing a notice in the prior U.S. national application.

Indeed, inspection of 35 U.S.C. 122(b) itself refutes applicant's contentions that the mere fact of filing of the PCT application operated as the required statutory notice to the USPTO.
The relevant clause of 35 U.S.C. 122(b)(2)((B)(iii) sets forth that the applicant who, as here, has filed an application under a multilateral international agreement **directed to the invention disclosed in the application filed in the Patent and Trademark office, shall notify the Director... of such filing**." Thus, the obligation to make a comparison of the invention disclosed in the application filed in the United States, with the invention disclosed in the application filed in the foreign country or under the multilateral international agreement rests with the applicant who has made the filings.

Petitioner would have the USPTO believe the statute obligates the Director to make a comparison of the invention disclosed in each

applicant's U.S. application with the invention disclosed in each and every of that same applicant's foreign applications or applications filed under a multilateral international agreement to ferret out possible instances of the requisite notification. Indeed, it would be impossible for the USPTO to try to detect any--much less all--foreign or treaty filings of all those applicants who likewise have filed an application in the U.S., and then compare disclosure of the U.S. filing with that of the foreign or multilateral international agreement. Such would necessarily have to fly in the face of the applicant's certification present on filing that no such foreign or treaty filing had been or would be undertaken, on the mere chance hat a possible abandonment under § 122(b) had occurred, and such unwonted effort would prevent the USPTO from performing its more substantive duty of examining the applications it has on file for patentability under §§ 102, 102, 103.

Such an interpretation of the statute is untenable and the burden such an interpretation it would place on the USPTO unbearable. But see Griffin v. Oceanic Contractors, Inc., 458 U.S. 564, 575 (1982)("[I]nterpretations of a statute which would produce absurd results are to be avoided if alternative interpretations consistent with the legislative purpose are available.") Rather, such a burden is properly borne by those who do the diverse filings and as such are in the best position to make the relationship determination required by 35 U.S.C. 122(b)(2)(B)(i).

Indeed it would be improper for the Director to assume, contrary to what petitioner appears to contend, that each and every notification of the fact that benefit of a prior U.S. national application was being claimed upon USPTO receipt of a filing under the PCT filing was itself the notification required by 35 U.S.C. 122(b)(2)(B)(iii). If such were to be construed as a proper notification then the referenced U.S. national application would automatically be cleared for pre grant publication. However, that would tend to compromise the confidentiality requirements of 35 U.S.C. 122(a) for those referenced applications, based upon an unwarranted assumption, by the USPTO, that the PCT application was directed to the invention disclosed in the prior U.S. national application.

Moreover, the mere fact that benefit of a given prior U.S. national application may have been claimed when a PCT application was deposited with the USPTO does not mean *ipso facto that* the PCT application is directed to the invention disclosed in the given prior U.S. national application filed in the United States

within the meaning of 35 U.S.C. 122(b)(2)((B)(i). Cf. In re Gosteli, 872 F.2d. 1008, 10 USPQ2d 1614 (Fed. Cir. 1989) (patentee's § 120 claim for benefit of filing date of an earlier filed U.S. application refused, notwithstanding satisfaction of the formal requirements to claiming benefit of the aforementioned application, since judicial determination holds later claimed invention not found in prior application); New Railhead Manufacturing LLC v. Vermeer Manufacturing Co.,63 USPQ2d 1843 (Fed Cir. 2002) (patentee's § 119(e) claim for benefit of filing date of earlier filed U.S. provisional application refused notwithstanding satisfaction of the formal requirements for claiming benefit, since judicial determination holds later claimed invention not found in prior provisional application).

Rather, a fair reading of 35 U.S.C. 122(b) reveals that it is the applicant who has filed the prior application in the U.S. and the later application under a multilateral international treaty (e.g., the PCT) or in a foreign country, who must notify the USPTO within 45 days when that treaty or foreign application is directed to the invention already on file at the USPTO. The statute does not make distinctions between whether the applicant has deposited the subsequently filed application in the USPTO as the receiving office, or with a foreign receiving office, or even with a foreign patent office; the statute requires the applicant to notify the USPTO within 45 days of that deposit if the latter filed application is for the invention disclosed in the prior U.S. application. Only the applicant, not the USPTO, is able at that time to make the determination required by statute that the latter filed application is for the invention disclosed in the prior U.S. application. Contrary to petitioner's position, the statute does not authorize, much less compel, the USPTO to determine if the later filed treaty or foreign application is for the invention disclosed in the application on file in the USPTO. If such were the case then the USPTO would have to continuously monitor all foreign patent offices and treaty application receiving offices for all priority claims involving prior U.S. filed applications, and if no notification was received within 45 days of the later filing or deposit or no withdrawal had been received in the USPTO, hold the application abandoned. Such an absurd result is avoided merely by interpreting the statute as requiring the applicant to make the comparison as well as the notification. See Griffin, supra.

This application is being returned to Technology Center AU 2164.

Any inquiries concerning this decision may be directed to the undersigned at (703) 305-8680.

Brian Hearn

Brian Hearn
Petitions Examiner
Office of Petitions
Office of the Deputy Commissioner
for Patent Examination Policy

UNITED STATES PATENT AND TRADEMARK OFFICE

COMMISSIONER FOR PATENTS
UNITED STATES PATENT AND TRADEMARK OFFICE
P.O. BOX 1450
ALEXANDRIA, VA 22313-1450
www.uspto.gov

FENWICK & WEST LLP
SILICON VALLEY CENTER
801 CALIFORNIA STREET
MOUNTAIN VIEW CA 94041

COPY MAILED

MAY 24 2007

OFFICE OF PETITIONS

In re Application of :
La Mura, et al. :
Application No. 09/885,720 : ON PETITION
Filed: June 19, 2001 :
Attorney Docket No. COM-003CIA//23050-09086 :
For: ENHANCED AUCTION MECHANISM FOR ONLINE TRANSACTIONS

This is a decision on the petition under 37 CFR 1.137(a), filed May 9, 2007. The petition will be treated under 37 CFR 1.181, as a request that the Office withdraw the holding of abandonment of the above-identified application.

The petition under 37 CFR 1.181 is **GRANTED**.

The petition under 37 CFR 1.137(a) is **DISMISSED AS MOOT**.

This application was held abandoned for failure to respond in a timely manner to the non-final Office action, mailed October 4, 2006, which set forth an extendable three (3) month period for reply. The Office contended that this application became abandoned on January 5, 2007 for failure to reply to the October 4, 2006 non-final Office action. A Notice of Abandonment was mailed on April 10, 2007.

Petitioners constructively request withdrawal of the holding of abandonment based on the assertion that an amendment and request for three month extension of time and require fee were timely received in the Office on April 4, 2007. The undersigned has located the original documents in the application file and Office financial records shows that the required three month extension of time fee was charged on April 9, 2007. The mailroom date of the payment was April 4, 2007. Therefore, the three month extension of time and amendment were timely filed.

The petition under 37 CFR 1.181 is **granted**, the holding of abandonment is withdrawn, and the April 10, 2007 Notice of Abandonment is **vacated**. No petition fee has been or will be charged in connection with this matter.

The $500.00 Rule 137(a) petition fee will be credited to deposit account no. 19-2555.

The application file does not indicate a change of address has been filed in this case, although the address given on the petition differs from the address of record. A change of address should be filed in this case in accordance with MPEP 601.03. A courtesy copy of this decision is being mailed to the address noted on the petition. However, until otherwise instructed, all future correspondence regarding this application will be mailed solely to the address of record.

After the mailing of this decision, the application file will be forwarded to Technology Center A.U. 3693 for consideration of the amendment filed on April 4, 2007.

Telephone inquiries pertaining to this matter may be directed to the undersigned at (571) 272-3230.

Shirene Willis Brantley

Shirene Willis Brantley
Senior Petitions Attorney
Office of Petitions
Office of the Deputy Commissioner
for Patent Examination Policy

CC: MARC A. BERGER
P.O. BOX 691
SOQUEL, CA 95073

UNITED STATES PATENT AND TRADEMARK OFFICE

Commissioner for Patents
United States Patent and Trademark Office
P.O. Box 1450
Alexandria, VA 22313-1450
www.uspto.gov

FENWICK & WEST LLP
SILICON VALLEY CENTER
801 CALIFORNIA STREET
MOUNTAIN VIEW, CA 94041

COPY MAILED

AUG 2 2 2008

OFFICE OF PETITIONS

In re Application of	:	
Pierfrancesco, **LA MURA**	:	
Application No. 09/885,720	:	DECISION ON PETITION
Filed: June 19, 2001	:	TO WITHDRAW
Attorney Docket No. COM-003CIA	:	FROM RECORD
	:	

This is a decision on the Request to Withdraw as attorney or agent of record under 37 C.F.R. § 1.36(b), filed May 7, 2008.

The request is **APPROVED**.

A grantable request to withdraw as attorney/agent of record must be signed by every attorney/agent seeking to withdraw or contain a clear indication that one attorney is signing on behalf of another/others. A request to withdraw will not be approved unless at least 30 (thirty) days would remain between the date of approval and the later of the expiration date of a time to file a response or the expiration date of the maximum time period which can be extended under 37 C.F.R. § 1.136(a).

The request was signed by John T. McNeilis on behalf of all the attorney/agents associated with Customer Number 00758.

All the attorneys/agents associated with Customer Number 00758 have been withdrawn.

Applicant is reminded that there is no attorney of record at this time.

The request to change the correspondence of record is not acceptable as the requested correspondence address is not that of: (1) the first named signing inventor; or (2) an intervening assignee of the entire interest under 37 C.F.R 3.71. All future communications from the Office will be directed to the first named signing inventor at the first copied address below until otherwise properly notified by the applicant.

In order to request or take action in a patent matter, the assignee must establish its ownership of the patent to the satisfaction of the Director. In this regard, a Statement under 37 CFR 3.73(b) must have either: (i) documentary evidence of a chain of title from the original owner to the assignee (*e.g.*, copy of an executed assignment), and a statement affirming that the documentary evidence of the chain of title from the original owner to the assignee was or concurrently is being submitted for recordation pursuant to § 3.11; or (ii) a statement specifying where documentary evidence of a chain of title from the original owner to the assignee is recorded in the assignment records of the Office (*e.g.*, reel and frame number).

Telephone inquiries concerning this decision should be directed to the undersigned at 571-272-6735.

Diane Goodwyn
Petitions Examiner
Office of Petitions

cc: PIERFRANCESCO LA MURA
440 MONROE DRIVE
PALO ALTO, CA 94306

cc: CONTRACTS ATTORNEY
INVENTION LAW GROUP, PLLC
1687 114TH AVENUE SE #100
BELLEVUE, WA 98004

UNITED STATES PATENT AND TRADEMARK OFFICE

Commissioner for Patents
United States Patent and Trademark Office
P.O. Box 1450
Alexandria, VA 22313-1450
www.uspto.gov

RECEIVED

SEP 25 2008

OFFICE OF PETITIONS

FENWICK & WEST LLP
SILICON VALLEY CENTER
801 CALIFORNIA STREET
MOUNTAIN VIEW, CA 94041

COPY MAILED

AUG 22 2008

OFFICE OF PETITIONS

In re Application of	:	
Pierfrancesco, **LA MURA**	:	
Application No. 09/885,720	:	DECISION ON PETITION
Filed: June 19, 2001	:	TO WITHDRAW
Attorney Docket No. COM-003CIA	:	FROM RECORD
	:	

This is a decision on the Request to Withdraw as attorney or agent of record under 37 C.F.R. § 1.36(b), filed May 7, 2008.

The request is **APPROVED**.

A grantable request to withdraw as attorney/agent of record must be signed by every attorney/agent seeking to withdraw or contain a clear indication that one attorney is signing on behalf of another/others. A request to withdraw will not be approved unless at least 30 (thirty) days would remain between the date of approval and the later of the expiration date of a time to file a response or the expiration date of the maximum time period which can be extended under 37 C.F.R. § 1.136(a).

The request was signed by John T. McNeilis on behalf of all the attorney/agents associated with Customer Number 00758.

All the attorneys/agents associated with Customer Number 00758 have been withdrawn.

Applicant is reminded that there is no attorney of record at this time.

The request to change the correspondence of record is not acceptable as the requested correspondence address is not that of: (1) the first named signing inventor; or (2) an intervening assignee of the entire interest under 37 C.F.R 3.71. All future communications from the Office will be directed to the first named signing inventor at the first copied address below until otherwise properly notified by the applicant.

In order to request or take action in a patent matter, the assignee must establish its ownership of the patent to the satisfaction of the Director. In this regard, a Statement under 37 CFR 3.73(b) must have either: (i) documentary evidence of a chain of title from the original owner to the assignee (*e.g.*, copy of an executed assignment), and a statement affirming that the documentary evidence of the chain of title from the original owner to the assignee was or concurrently is being submitted for recordation pursuant to § 3.11; or (ii) a statement specifying where documentary evidence of a chain of title from the original owner to the assignee is recorded in the assignment records of the Office (*e.g.*, reel and frame number).

Telephone inquiries concerning this decision should be directed to the undersigned at 571-272-6735.

Diane Goodwyn
Petitions Examiner
Office of Petitions

cc: PIERFRANCESCO LA MURA
440 MONROE DRIVE
PALO ALTO, CA 94306

cc: CONTRACTS ATTORNEY
INVENTION LAW GROUP, PLLC
1687 114TH AVENUE SE #100
BELLEVUE, WA 98004

UNITED STATES PATENT AND TRADEMARK OFFICE

COMMISSIONER FOR PATENTS
UNITED STATES PATENT AND TRADEMARK OFFICE
WASHINGTON, D.C. 20231
www.uspto.gov

Paper No. 11

KONRAD RAYNES VICTOR & MANN
315 SOUTH BEVERLY DRIVE
SUITE 210
BEVERLY HILLS, CA 90212

COPY MAILED

DEC 1 2 2002

OFFICE OF PETITIONS

In re Application of
Kazunobu Kuwazawa
Application No. 09/885,761
Filed: June 19, 2001
Attorney Docket No. 15.44/5852

ON PETITION

This is a decision on the petition under 37 CFR 1.137(b), filed November 27, 2002, to revive the above-identified application.

The petition is **GRANTED**.

The above-identified application became abandoned for failure to reply in a timely manner to the non-final Office action mailed May 20, 2002, which set a shortened statutory period for reply of three (3) months. No extensions of time under the provisions of 37 CFR 1.136(a) were obtained. Accordingly, the above-identified application became abandoned on August 21, 2002.

Telephone inquiries concerning this decision should be directed to Wan Laymon at (703) 305-9282.

The application file is being forwarded to Technology Center AU 2812.

Wan Laymon
Petitions Examiner
Office of Petitions
Office of the Deputy Commissioner
for Patent Examination Policy

UNITED STATES PATENT AND TRADEMARK OFFICE

COMMISSIONER FOR PATENTS
UNITED STATES PATENT AND TRADEMARK OFFICE
WASHINGTON, D.C. 20231
www.uspto.gov

Paper No. 5

Ralph E. Smith
Brooks & Kushman P.C.
22nd Floor
1000 Town Center
Southfield, MI 48075-1551

COPY MAILED

FEB 5 2002

OFFICE OF PETITIONS

In re Application of
Campbell et al.
Application No. 09/885,797
Filed: June 20, 2001
Attorney Docket No.12195 (LUTA 0244 PUSP)

DECISION GRANTING STATUS UNDER 37 CFR 1.47(a)

This is in response to the petition under 37 CFR 1.47(a), filed December 20, 2001.

The petition is GRANTED.

Petitioner has shown that the non-signing inventor has refused to join in the filing of the above-identified application after having been presented with the application papers. Specifically, the petition indicates on two separate occasions the application papers were sent certified mail return receipt to inventor's last known address. The non-signing inventor's failure to respond to the application sufficiently establishes that he refuses to execute the application papers.

The above-identified application and papers have been reviewed and found in compliance with 37 CFR 1.47(a). This application is hereby accorded Rule 1.47(a) status.

As provided in Rule 1.47(c), this Office will forward notice of this application's filing to the non-signing inventor at the address given in the petition. Notice of the filing of this application will also be published in the Official Gazette.

Telephone inquiries related to this decision may be directed to Petitions Attorney Charlema R. Grant at (703) 306-0251.

Beverly M. Flanagan
Supervisory Petitions Examiner
Office of Petitions
Office of the Deputy Commissioner
for Patent Examination Policy

UNITED STATES PATENT AND TRADEMARK OFFICE

Commissioner for Patents
United States Patent and Trademark Office
P.O. Box 1450
Alexandria, VA 22313-1450
www.uspto.gov

ROBERT KREBS
THELEN REID & PRIEST LLP
225 W. SANTA CLARA STREET
SUITE 1200
SAN JOSE, CA 95113

COPY MAILED

JUN 29 2006

OFFICE OF PETITIONS

In re Application of	:	
Richard W.D. Booth et al	:	
Application No. 09/885,811	:	DECISION ON PETITION
Filed: June 19, 2001	:	TO WITHDRAW
Attorney Docket No. 034942-245	:	FROM RECORD
	:	

This is a decision on the Request to Withdraw as attorney or agent of record under 37 C.F.R. § 1.36(b), filed October 12, 2005.

The request is **NOT APPROVED** as moot.

A review of the file record indicates that the power of attorney to Robert E. Krebs has been revoked by the assignee of the patent application. Accordingly, the request to withdraw under 37 C.F.R. § 1.36(b) is moot.

All future communications from the Office will continue to be directed to the below-listed address until otherwise notified by applicant.

Telephone inquires concerning this decision should be directed to Irvin Dingle at 571-272- 3210.

David Bucci for
Petitions Examiner
Office of Petitions

cc: Tropian Inc.
20813 Stevens Creek Blvd.
Cupertino, CA 95014

UNITED STATES PATENT AND TRADEMARK OFFICE

Commissioner for Patents
United States Patent and Trademark Office
P.O. Box 1450
Alexandria, VA 22313-1450
www.uspto.go

DEVINE, MILLIMET & BRANCH, P.A.
111 AMHERST STREET
BOX 719
MANCHESTER, NH 03105

COPY MAILED

AUG 1 9 2004

OFFICE OF PETITIONS

In re Application of	:	
Lane et al.	:	
Application No. 09/885,834	:	ON PETITION
Filed: June 20, 2001	:	
Attorney Docket No. 10821/51085	:	

This is a notice regarding your request for acceptance of a fee deficiency submission under 37 CFR 1.28. On September 1, 1998, the Court of Appeals for the Federal Circuit held that 37 CFR 1.28(c) is the sole provision governing the time for correction of the erroneous payment of the issue fee as a small entity. **See DH Technology v. Synergystex International, Inc. 154 F.3d 1333, 47 USPQ2d 1865 (Fed. Cir. Sept. 1, 1998).**

The Office no longer investigates or rejects original or reissue applications under 37 CFR 1.56. **1098 Off. Gaz. Pat. Office 502 (January 3, 1989)**. Therefore, nothing in this Notice is intended to imply that an investigation was done.

Your fee deficiency submission under 37 CFR 1.28 is hereby **ACCEPTED**.

There is no indication that the person signing the instant petition was ever given a power of attorney or authorization of agent to prosecute the above-identified application. If the person signing the instant petition desires to receive future correspondence regarding this application, the appropriate power of attorney or authorization of agent must be submitted. While a courtesy copy of this decision is being mailed to the person signing the instant petition, all future correspondence will be directed solely to the address currently of record until such time as appropriate instructions are received to the contrary.

Inquiries related to this communication should be directed to the undersigned at (703) 306-0482. Any telephone inquiries after approximately **September 24, 2004** should be directed to (571) 272-3206.

This matter is being referred to Technology Center 2100 for further examination on the merits.

Liana Chase
Petitions Examiner
Office of Petitions
Office of the Deputy Commissioner
for Patent Examination Policy

cc: DAVID J. DYKEMAN
PALMER & DODGE LLP
111 HUNTINGTON AVENUE
BOSTON, MA 02199-7613

UNITED STATES PATENT AND TRADEMARK OFFICE

Commissioner for Patents
United States Patent and Trademark Office
P.O. Box 1450
Alexandria, VA 22313-1450
www.uspto.gov

Paper No.

Michael E. Milz
Brinks Hofer Gilson & Lione
P.O. Box 10395
Chicago, IL 60610

COPY MAILED

JAN 0 4 2005

OFFICE OF PETITIONS

In re Application of Ooshima et al. Application No. 09/885,871 Filed: June 20, 2001 Atty Docket No. 9281-4138	: : : : :	DECISION ON APPLICATION FOR PATENT TERM ADJUSTMENT

This is a decision on the "REQUEST FOR RECONSIDERATION OF PATENT TERM ADJUSTMENT UNDER 37 C.F.R. § 1.705(d)," filed October 29, 2004. Applicants request correction of the patent term adjustment from two hundred sixty-eight (268) days to three hundred sixty-three (363) days. Applicants request an increase based on the Office taking in excess of three years to issue the patent. Applicants calculate the additional adjustment for this delay as 95 days, counting the number of days between the 3 year date specified in 37 C.F.R. § 1.703(b), which in this case is June 20, 2004, and the date of mailing of the notice of allowance, September 23, 2004.

The instant application for patent term adjustment requests reconsideration of the patent term adjustment as it relates to the Office's failure to issue the patent within 3 years of the filing date. A decision is being **held in abeyance** until after the actual patent date. Knowledge of the actual date the patent issues is required to calculate the amount, if any, of additional patent term patentee is entitled to for Office failure to issue the patent within 3 years. See § 1.703(b).

Patentees are given **TWO (2) MONTHS** from the issue date of the patent to file a written request for reconsideration of the patent term adjustment for Office failure to issue the patent within 3 years. A copy of this decision should accompany the request. Patentees may seek such consideration without payment of an additional fee. However, as to all other bases for seeking reconsideration of the patent term adjustment indicated in the patent, all requirements of § 1.705(d) must be met. Requests for reconsideration on other bases must be timely filed and must include payment of the required fee.

Petitioner is reminded that if an application is entitled to an adjustment under 35 U.S.C. 154(b)(1)(B), the entire period during which the application (except for periods excluded under 35 U.S.C. 154(b)(1)(B)(i)-(iii)), and not just the period beginning three years after the actual filing date of the application, is the period of delay under 35 U.S.C. 154(b)(1)(B) in determining

whether periods of delay overlap under 35 U.S.C. 154(b)(2)(A). Thus, any days of delay for Office issuance of the patent more than 3 years after the filing date of the application which overlap with the days of patent term adjustment accorded prior to the issuance of the patent will not result in any additional patent term adjustment. See 35 U.S.C. 154(b)(1)(B), 35 U.S.C. 154(b)(2)(A), and 37 CFR § 1.703(f). See also *Revision of Patent Term Extension and Patent Term Adjustment Provisions; Final Rule*, 69 Fed. Reg. 21704 (April 22, 2004).

The Office acknowledges submission of the $200.00 fee set forth in 37 CFR 1.18(e). No additional fees are required.

The application file is being forwarded to the Office of Patent Publication for issuance of the patent.

Telephone inquiries specific to this matter should be directed to Nancy Johnson, Senior Petitions Attorney, at (571) 272-3219.

Kerry A. Fries
for

Karin Ferriter
Senior Legal Advisor
Office of Patent Legal Administration
Office of Deputy Commissioner
for Patent Examination Policy

UNITED STATES PATENT AND TRADEMARK OFFICE

Commissioner for Patents
United States Patent and Trademark Office
P.O. Box 1450Alexandria, VA 22313-1450
www.uspto.gov

JJGJR.: 06-06

Paper No: __

ROBERT N. ROUNTREE
TEXAS INSTRUMENTS
INCORPORATED
P O BOX 655474, M/S 3999
DALLAS TX 75265

COPY MAILED

JUN 19 2006

OFFICE OF PETITIONS

In re Application of	:	
Dabak, et al.	:	
Application No. 09/885,878	:	ON PETITION
Filed: 20 June, 2001	:	
Attorney Docket No. TI-131293	:	

This is a decision on a petition filed on 24 May, 2006, under 37 C.F.R. §1.137(b).

For the reasons forth below, the petition under 37 C.F.R. §1.137(b) is **DISMISSED**.

BACKGROUND

The record indicates:

- Petitioner failed to reply timely and properly to the final Office action mailed on 11 October, 2005, with reply due absent extension of time on or before 11 January, 2006;

- Petitioner filed a reply in the form of an after final amendment (with request and fee for extension of time) on 6 March, 2006, which reply is not of right,[1] and the Examiner mailed an Advisory Action on 20 March, 2006;

[1] A proper reply is a an amendment *prima facie* placing the application in condition for allowance, a Notice of Appeal, or an RCE (with fee and submission). (See: MPEP §711.03(c).)

- on 11 April, 2006, Petitioner filed a Notice of Appeal and fee (with request and fee for extension of time), after which filing Petitioner had two (2) months absent extension of time–i.e., until Monday 11 June, 2006)–to file the Appeal Brief and fee, however, on 24 May, 2006, Petitioner filed instead the instant petition with a reply in the form of a request for continued examination and fee with a submission in the form of an amendment 37 C.F.R. §1.114;

- thus, the instant application apparently did not go abandoned by operation of law and remained and remains pending (and it does not appear that the Office mailed the Notice of Abandonment before the instant petition was filed);

- Petitioner also has made the statement of unintentional delay–thus, Petitioner appears to have satisfied the regulatory requirements under 37 C.F.R. §1.137(b), however, this appears to be moot.

STATUTES, REGULATIONS AND ANALYSIS

Congress has authorized the Commissioner to "revive an application if the delay is shown to the satisfaction of the Commissioner to have been "unavoidable." 35 U.S.C. §133 (1994).[2]

The regulations at 37 C.F.R. §1.137(a) and (b) set forth the requirements for a petitioner to revive a previously unavoidably or unintentionally, respectively, abandoned application under this congressional grant of authority. The language of 35 U.S.C. §133 and 37 C.F.R. §1.137(a) is clear, unambiguous, and without qualification: the delay in tendering the reply to the outstanding Office action, as well as filing the first petition seeking revival, must have been unavoidable for the reply now to be accepted on petition.[3]

Delays in responding properly raise the question whether delays are unavoidable.[4] Where there is a question whether the delay was unavoidable, Petitioners must meet the burden of establishing that the delay was unavoidable within the meaning of 35 U.S.C. §133 and 37 C.F.R. §1.137(a).[5]

---

[2] 35 U.S.C. §133 provides:
35 U.S.C. §133 Time for prosecuting application.
Upon failure of the applicant to prosecute the application within six months after any action therein, of which notice has been given or mailed to the applicant, or within such shorter time, not less than thirty days, as fixed by the Commissioner in such action, the application shall be regarded as abandoned by the parties thereto, unless it be shown to the satisfaction of the Commissioner that such delay was unavoidable.

[3] Therefore, by example, an unavoidable delay in the payment of the Filing Fee might occur if a reply is shipped by the US Postal Service, but due to catastrophic accident, the delivery is not made.

[4] See: *Changes to Patent Practice and Procedure; Final Rule Notice*, 62 *Fed. Reg.* at 53158-59 (October 10, 1997), 1203 *Off. Gaz. Pat. Office* at 86-87 (October 21, 1997).

[5] See: In re Application of G, 11 USPQ2d 1378, 1380 (Comm'r Pats. 1989).

And the Petitioner must be diligent in attending to the matter.[6] Failure to do so does not constitute the care required under Pratt, and so cannot satisfy the test for diligence and due care.

(By contrast, unintentional delays are those that do not satisfy the very strict statutory and regulatory requirements of unavoidable delay, and also, by definition, are not intentional.[7]))

Allegations as to
Unintentional Delay

The requirements for relief under the provisions of 37 C.F.R. §1.137(b) are: petition, fee, reply, showing of unintentional delay, and–where appropriate–a terminal disclaimer and fee.

The record (including the petition filed on 30 May, 2006) does not necessitate a finding that the delay between midnight 19 June, 2005 (date of abandonment), and 30 May, 2006 (date of filing of grantable petition), was not unintentional.

Rather, the Patent and Trademark Office is relying in this matter on the duty of candor and good faith of Applicants (Ratcliff, Kleiwer and Allred) and their Counsel/Petitioner (Carlton H. Hoel (Reg. No. 29,934) when accepting Petitioner's representation that the delay in filing the response was unintentional.[8]

While it appears that Petitioner has satisfied the requirements of the regulation, it also appears that the application never went abandoned and the issue is moot.

CONCLUSION

The petition under 37 C.F.R. §1.137(b) is **dismissed as moot**.

The application is released to the Examiner in Technology Center 2600 for further processing in due course.

---

[6] See: Diligence in Filing Petitions to Revive and Petitions to Withdraw the Holding of Abandonment, 1124 Off. Gaz. Pat. Office 33 (March 19, 1991). It was and is Petitioner's burden to exercise diligence in seeking either to have the holding of abandonment withdrawn or the application revived. See 1124 Off. Gaz. Pat. Office supra.

[7] Therefore, by example, an unintentional delay in the reply might occur if the reply and transmittal form are to be prepared for shipment by the US Postal Service, but other pressing matters distract one's attention and the mail is not timely deposited for shipment.

[8] See Changes to Patent Practice and Procedure, 62 Fed. Reg. at 53160 and 53178, 1203 Off. Gaz. Pat. Office at 88 and 103 (responses to comments 64 and 109)(applicant obligated under 37 C.F.R. §10.18 to inquire into the underlying facts and circumstances when providing the statement required by 37 C.F.R. §1.137(b) to the Patent and Trademark Office).

Telephone inquiries concerning this decision may be directed to the undersigned at (571) 272-3214.

John J. Gillon, Jr.
Senior Attorney
Office of Petitions

UNITED STATES PATENT AND TRADEMARK OFFICE

Commissioner for Patents
United States Patent and Trademark Office
P.O. Box 1450
Alexandria, VA 22313-1450
www.uspto.gov

MILLEN WHITE ZELANO & BRANIGAN, P.C.
2200 CLARENDON BLVD.
SUITE 1400
ARLINGTON, VA 22201

COPY MAILED

NOV 24 2004

OFFICE OF PETITIONS

In re Application of :
Richard M. Kris et al :
Application No. 09/885,973 : ON PETITION
Filed: June 22, 2001 :
Attorney Docket No. NEOGEN-1 WO P2-C2 :

This is a decision on the petition under 37 CFR 1.137(b), filed October 7, 2004, to revive the above-identified application.

The petition is **GRANTED**.

The above-identified application became abandoned for failure to reply in a timely manner to the non-final Office action mailed April 6, 2004, which set a shortened statutory period for reply of three (3) months. No extensions of time under the provisions of 37 CFR 1.136(a) were obtained. Accordingly, the above-identified application became abandoned on July 7, 2004.

The above-identified application is being revived solely for purposes of continuity. As continuity has been established by this decision reviving the above-identified application, the above-identified application is again abandoned in favor of a continuing application No.10/959,582.

Telephone inquiries concerning this decision should be directed to Wan Laymon at (571) 272-3220.

This matter is being referred to Files Repository.

Wan Laymon
Petitions Examiner
Office of Petitions
Office of the Deputy Commissioner
for Patent Examination Policy

UNITED STATES PATENT AND TRADEMARK OFFICE

Commissioner for Patents
United States Patent and Trademark Office
P.O. Box 1450
Alexandria, VA 22313-1450
www.uspto.gov

JJGJr: 07-06

Paper No: 11

LOUIS M. HEIDELBERGER
REED SMITH LLP
2500 ONE LIBERTY PLACE
PHILADELPHIA PA 19103-7301

COPY MAILED

JUL 17 2006

OFFICE OF PETITIONS

In re Application of	:	
Hytcheson, et al.	:	
Application No. 09/885,977	:	NOTICE
Filed: 22 June, 2001	:	
Patent No. 6,947,761	:	
Issue Date 20 September, 2005	:	
Attorney Docket No. 01-40266-US	:	
(953267.20088)	:	

This is a notice regarding the request for acceptance of a fee deficiency submission (properly considered under 37 C.F.R. §1.28) filed 30 March, 2006.

NOTE: **Petitioner is reminded and placed on Notice that the Rules of Practice mandate that Petitioner provide both the application and patent numbers, as well as filing and issue dates, in all matters regarding this patent.**[1]

It remains Petitioner's responsibility to ensure that the proper fees are timely offered and accepted.

[1] See: 37 C.F.R. §1.366 and MPEP §2515.

On September 1, 1998, the Court of Appeals for the Federal Circuit held that 37 C.F.R. §1.28(c) is the sole provision governing the time for correction of the erroneous payment of the issue fee as a small entity. See DH Technology v. Synergystex International, Inc. 154 F.3d 1333, 47 USPQ2d 1865 (Fed. Cir. Sept. 1, 1998).

The Office no longer investigates or rejects original or reissue applications under 37 C.F.R. §1.56. 1098 Off. Gaz. Pat. Office 502 (January 3, 1989). Therefore, nothing in this notice is intended to imply that an investigation was done.

Your fee deficiency submission under 37 C.F.R. §1.28 hereby is **ACCEPTED**

Inquiries regarding this application should be directed to the Technology Center. The general phone number for the Office of Petitions which should be used for status requests is (571) 272-3282.

John J. Gillon, Jr.
Senior Attorney
Office of Petitions

UNITED STATES PATENT AND TRADEMARK OFFICE

COMMISSIONER FOR PATENTS
UNITED STATES PATENT AND TRADEMARK OFFICE
P.O. BOX 1450
ALEXANDRIA, VA 22313-1450
www.uspto.gov

EVEREST INTELLECTUAL PROPERTY LAW GROUP
P.O. BOX 708
NORTHBROOK, IL 60065

COPY MAILED

JUN 17 2008

OFFICE OF PETITIONS

In re Application of :
David R. Daniels, et. al. :
Application No. 09/885,984 :
Filed: June 20, 2001 :
Attorney Docket No. P00,1904 :

ON PETITION

This is a decision on the petition under 37 CFR 1.137(b), filed October 19, 2007, to revive the above-identified application.

The application became abandoned for failure to respond to the non-final Office action mailed July 28, 2005. A Notice of Abandonment was mailed on March 20, 2006.

There is no indication that the person signing the instant petition was ever given a power of attorney or authorization of agent to prosecute the above-identified application. However, in accordance with 37 CFR 1.34(a), the signature of Renato L. Smith appearing on the petition shall constitute a representation to the United States Patent and Trademark Office that he/she is authorized to represent the particular party in whose behalf he/she acts.

Additionally, it is not apparent whether the statement of unintentional delay was signed by a person who would have been in a position of knowing that the entire delay in filing the required reply from the due date for the reply until the filing of a grantable petition pursuant to 37 CFR 1.137(b) was unintentional. Nevertheless, in accordance with 37 CFR 10.18, the statement is accepted as constituting a certification of unintentional delay. However, in the event that petitioner has no knowledge that the delay was unintentional, petitioner must make such an inquiry to ascertain that, in fact, the delay was unintentional. If petitioner discovers that the delay was intentional, petitioner must so notify the Office.

The petition satisfies the requirements of 37 CFR 1.137(b) in that petitioner has supplied (1) the reply in the form of an amendment, specification and two sheets of replacement drawings containing Figures 11-13; (2) the petition fee of $1,540; and (3) a proper statement of unintentional delay. Therefore, the petition is **GRANTED**.

If petitioner desires to receive future correspondence regarding this application, the appropriate power of attorney or authorization of agent must be submitted. A courtesy copy of this decision

is being mailed to petitioner. Nevertheless, all future correspondence regarding this application file will be directed solely to the address of record until otherwise instructed.

This application file is being referred to Technology Center Art Unit 3725 for further processing.

Telephone inquiries concerning this decision should be directed to the undersigned at (571) 272-3226.

Andrea Smith
Petitions Examiner
Office of Petitions

cc: Renato L. Smith
Bell, Boyd & Lloyd, LLP
P.O. Box 1135
Chicago, IL 60690-1135

UNITED STATES
PATENT AND
TRADEMARK OFFICE

UNDER SECRETARY OF COMMERCE FOR INTELLECTUAL PROPERTY
AND DIRECTOR OF THE UNITED STATES PATENT AND TRADEMARK OFFICE
WASHINGTON, D.C. 20231
WWW.USPTO.GOV

MAY 22 2002

William L. Strauss
FINNEGAN, HENDERSON, FARABOW,
GARRETT & DUNNER, L.L.P.
1300 I Street, N.W.
Washington, DC 20005

Paper No. 6

In re Application of:	:	
Peter V. Fisher et al	:	
Serial No.: 08/886011	:	PETITION DECISION
Filing Date: June 22, 2001	:	
Attorney's Docket No.: 07141.0040	:	

This is in response to "PETTION UNDER 37 CFR 1.84(a)(2) and (b)(2)" filed on June 22, 2001.

Applicant has met the requirements set forth under 37 CFR 1.84(a)(2) and (b)(2). Accordingly, the petition is granted.

Should there be any questions with regard to this letter please contact Cecilia Tsang by letter addressed to the Director, technology Center 1600, Washington, DC 20231, or by telephone at (703) 308-0254 or by facsimile transmission at (703) 308-3890.

Cecilia Tsang for
Bruce Kisliuk
Director, Technology Center 1600

UNITED STATES PATENT AND TRADEMARK OFFICE

Commissioner for Patents
United States Patent and Trademark Office
P.O. Box 1450
Alexandria, VA 22313-1450
www.uspto.gov
DIW Nov-06

FINNEGAN, HENDERSON, FARABOW, GARRETT & DUNNER
LLP
901 NEW YORK AVENUE, NW
WASHINGTON DC 20001-4413

COPY MAILED

NOV 28 2006

OFFICE OF PETITIONS

In re Patent No. 6,887,690	:	
Issued: 3 May, 2005	:	
Application No. 09/886,011	:	ON PETITION
Filed: 22 June, 2001	:	
Atty Docket No. 07414.0040-00000	:	

This is a decision in reference to the "PETITION TO CORRECT ASSIGNEE UNDER 37 CFR 1.183" filed on 22 September, 2006, which is being treated as a request under 37 CFR 3.81(b)[1] to correct the assignee on the front page of the above-identified patent by way of a Certificate of Correction.

The petition is **granted**.

Telephone inquires concerning this matter may be directed to the undersigned at 571.272.3231. Any questions concerning the issuance of the Certificate of Correction should be directed to the Certificates of Correction Branch at 703.305.8309.

The file is being forwarded to the Certificates of Correction Branch for issuance of the requested Certificate of Correction.

D Wood

Douglas I. Wood
Senior Petitions Attorney
Office of Petitions

[1] See Official Gazette of 22 June, 2004.

UNITED STATES PATENT AND TRADEMARK OFFICE

Commissioner for Patents
United States Patent and Trademark Office
P.O. Box 1450
Alexandria, VA 22313-1450
www.uspto.gov

Date : May 26, 2005

TO : Director, Office of Patent Publication

FROM : Office of the Deputy Commissioner for Patent Examination Policy

SUBJECT : Withdrawal from Issue of

Applicant(s) : Cheng Chung Wang
Application No. : 09/886,030
Filed : June 22, 2001

The above-identified application has been assigned Patent No. 6,904,633 and an issue date of June 14, 2005.

It is hereby directed that this application be withdrawn from issue at the request of the applicant.

Do not refund the issue fee.

The following erratum should be published in the Official Gazette if the above-identified application is published in the OG of June 14, 2005:

> "All reference to Patent No. 6,904,633 to CHENG CHUNG WANG of TAIWAN for INFLATABLE PRODUCT PROVIDED WITH ELECTRIC AIR PUMP appearing in the Official Gazette of June 14, 2005, should be deleted since no patent was granted."

Sherry D. Brinkley
Petitions Examiner
Office of Petitions
Office of the Deputy Commissioner
for Patent Examination Policy

cc: Paul Harrison, Crystal Park 3-44l (FAX-306-2737)
Deneise Boyd, Crystal Park 2, Suite 1100 (FAX-308-5413)
Mary Louise McAskill, Crystal Park 3-910 (FAX 305-4372)
Niomi Farmer, Crystal Park 3-9l0 (FAX-305-4372)
Mary E. Johnson (Cookie), P/OCS, CM1-6D07
Duane K.Davis, P/OCS, CM1-6A07
Tamara K. Greene, PK3-910

UNITED STATES PATENT AND TRADEMARK OFFICE

Commissioner for Patents
United States Patent and Trademark Office
P.O. Box 1450
Alexandria, VA 22313-1450
www.uspto.gov

MICHAEL D. BEDNAREK
SHAWPITTMAN
2300 N. STREET, N.W.
WASHINGTON, DC 20037-1128

COPY MAILED

MAY 2 6 2005

OFFICE OF PETITIONS

In re Application of :
Cheng Chung Wang :
Application No. 09/886,030 :
Filed: June 22, 2001 :
Attorney Docket No. None :

ON PETITION

This is a decision on the petition under 37 CFR 1.313(c)(2), filed May 25, 2005, to withdraw the above-identified application from issue after payment of the issue fee.

The petition is **GRANTED**.

The above-identified application is withdrawn from issue for consideration of a submission under 37 CFR 1.114 (request for continued examination). See 37 CFR 1.313(c)(2).

Petitioner is advised that the issue fee paid on January 7, 2005, in the above-identified application cannot be refunded. If, however, the above-identified application is again allowed, petitioner may request that it be applied towards the issue fee required by the new Notice of Allowance. [1]

It is noted that the customer number address given on the petition differs from the address of record. If appropriate, a change of address should be filed in this case in accordance with MPEP 601.03. A courtesy copy of this decision is being mailed to the address noted on the petition. However, until otherwise instructed, all future correspondence regarding this application will be mailed solely to the address of record.

Telephone inquiries relating to this decision should be directed to the undersigned at (571) 272-3204.

---

[1]The request to apply the issue fee to the new Notice may be satisfied by completing and returning the new Issue Fee Transmittal Form PTOL-85(b), which includes the following language thereon: "Commissioner for Patents is requested to apply the Issue Fee and Publication Fee (if any) or re-apply any previously paid issue fee to the application identified above." Petitioner is advised that, whether a fee is indicated as being due or not, the Issue Fee Transmittal Form **must** be completed and timely submitted to avoid abandonment. Note the language in bold text on the first page of the Notice of Allowance and Fee(s) Due (PTOL-85).

The application is being referred to Technology Center AU 3679 for further processing of the request for continued examination under 37 CFR 1.114 filed May 25, 2005.

Sherry D. Brinkley
Petitions Examiner
Office of Petitions
Office of the Deputy Commissioner
for Patent Examination Policy

cc: NELSON A. QUINTERO
QUINTERO LAW OFFICE
1617 BROADWAY, 3RD FLOOR
SANTA MONICA, CA 90404

UNITED STATES PATENT AND TRADEMARK OFFICE

UNITED STATES DEPARTMENT OF COMMERCE
United States Patent and Trademark Office
Address: COMMISSIONER FOR PATENTS
P.O. Box 1450
Alexandria, Virginia 22313-1450
www.uspto.gov

March 15, 2004

Russell Gross
Philips Intellectual Property and Standards
P.O. Box 3001
Briarcliff Manor, NY 10510

In re application of:
Haitsma, et al DECISION ON PETITION
Serial No.: 09/886,064
Filed: June 21, 2001

For: WATERMARK EMBEDDING METHOD AND ARRANGEMENT

This is a decision on the petition received on December 8, 2003, to withdraw the holding of abandonment in the above-identified application.

The above-identified application became abandoned for failure to reply within the meaning of 37 C.F.R. 1.113 in timely manner to the Notice to File Missing Parts of Application mailed August 21, 2001. Which set a shortened statutory period for reply of two (2) months. Accordingly, this application became abandoned October 23, 2001. A notice of abandonment was mailed on November 17, 2003.

On December 8, 2003, the office received a communication from the attorney of record. Enclosed was an acknowledgment that the attorney responded to the Notice to File Missing Parts on September 10, 2001.

The evidence submitted is sufficient to establish that the petitioners responded to the Notice to File Missing Parts on September 10, 2001 with a certification of mailing dated September 10, 2001.

The petition is hereby GRANTED.

The application has been completed for release to Technology Center 2131.

Telephone inquiries concerning this matter may be directed to Doshie E. Day at (703) 308-3640.

Doshie E. Day
Program Management Assistant
Office Initial Patent Examination

UNITED STATES PATENT AND TRADEMARK OFFICE

Commissioner for Patents
United States Patent and Trademark Office
P.O. Box 1450
Alexandria, VA 22313-1450
www.uspto.gov

Michael A. O'Neil. P.C.
8150 North Central Expressway
Suite 1150
DALLAS TX 75206

MAILED

JUL 06 2010

OFFICE OF PETITIONS

In re Application of	:	
Xiao Ping Zhou, et al.	:	
Application No. 09/886,078	:	NOTICE
Filed: June 20, 2001	:	
Attorney Docket No. 300100-1041	:	

This is in response to the paper filed May 27, 2010 under 37 CFR 1.28(g)(2) requesting that status as a Small Entity be removed.

In accordance with the Change of Entity Status request, status as a Small Entity has been removed.

This file is being forwarded to Files Repository to await payment of the maintenance fee when due.

Terri Johnson
Petitions Examiner
Office of Petitions

Pet. Dec.

UNITED STATES PATENT AND TRADEMARK OFFICE

Commissioner for Patents
United States Patent and Trademark Office
P.O. Box 1450
Alexandria, VA 22313-1450
www.uspto.gov

Mailed: 4/19/05

dss
Paper Number _____

In re application of
Gianni Franco Alessio
Serial No.09/886,117
Filed: June 22 2001
For: HIGH PRODUCTIVE APPARATUS AND METHOD FOR MOLDING COMPOSITE ITEMS

DECISION ON PETITION

This is a response to the PETITION UNDER 37 C.F.R. §1.181 TO WITHDRAW HOLDING OF ABANDONMENT filed March 25, 2004 The petition requests that the abandonment, as set forth in the Notice of Abandonment of March 05, 2004, for failure to timely file a proper reply to the Office letter of June 18, 2003, be withdrawn since the applicants did timely file a response thereto on October 31, 2003 by facsimile transmission to the USPTO. (A copy of the papers filed October 31, 2003 and a copy of the Facsimile Transmission Report indicating receipt of the facsimile transmission at the USPTO is attached to the instant petition.)

DECISION

The instant request has been accepted as a petition to withdraw the holding of abandonment under the provisions of 37 CFR 1.181 (no fee) - no abandonment-in-fact. A review of the evidence presented reveals that applicant's response was properly filed on October 31, 2003 by facsimile transmission as evidenced by the properly completed Certification of Facsimile Transmission attached to applicant's response and by the copy of the Facsimile Transmission report provided with the instant petition which indicates the successful transmission, to a USPTO facsimile telephone number (703-305-7718), of pages.2 Therefore, the application was never in-fact abandoned and any holding of abandonment for failure to timely file a proper response to the Office letter mailed on June 18, 2003 is hereby vacated, and the application is returned to pending status.

The application shall be forwarded to the examiner for processing and consideration of the papers originally filed October 31, 2003 by facsimile transmission and a copy of which is provided as an attachment to the instant petition.

The Petition is **GRANTED**.

JMStone

Jacqueline Stone, Director
Technology Center 1700
Chemical and Materials Engineering

Albert Josif
Modiano & Associati
Via Meravigli 16
20213 Milano
Italy

UNITED STATES PATENT AND TRADEMARK OFFICE

Commissioner for Patents
United States Patent and Trademark Office
P.O. Box 1450
Alexandria, VA 22313-1450
www.uspto.gov

COPY MAILED

OCT 27 2006

OFFICE OF PETITIONS

MERCHANT & GOULD (MICROSOFT)
P.O. BOX 2903
MINNEAPOLIS MN 55402-0903

In re Application of :
John E. Brezak et al :
Application No. 09/886,146 : ON PETITION
Filed: June 20, 2001 :
Attorney Docket No. 14917.0461US01 :

This is a decision on the petition under 37 CFR 1.137(b), filed September 19, 2006, to revive the above-identified application.

The petition is **DISMISSED**.

Any request for reconsideration of this decision must be submitted within TWO (2) MONTHS from the mail date of this decision. Extensions of time under 37 CFR 1.136(a) are permitted. The reconsideration request should include a cover letter entitled "Renewed Petition under 37 CFR 1.137(b)." This is **not** final agency action within the meaning of 5 U.S.C. § 704.

A grantable petition under 37 CFR 1.137(b)[1] must be accompanied by: (1) the required reply,[2] unless previously filed; (2) the petition fee as set forth in 37 CFR 1.17(m); (3) a statement that the entire delay in filing the required reply from the due date for the reply until the filing of a grantable petition pursuant to 37 CFR 1.137(b) was unintentional; and (4) any terminal disclaimer (and fee as set forth in 37 CFR 1.20(d)) required by 37 CFR 1.137(c). Where there is a question as to whether either the abandonment or the delay in filing a petition under 37 CFR 1.137 was unintentional, the Commissioner may require additional information. See MPEP 711.03(c)(III)(C) and (D). The instant petition lack(s) item(s) (3).

---

[1] As amended effective December 1, 1997. See Changes to Patent Practice and Procedure; Final Rule Notice, 62 Fed. Reg. 53131, 53194-95 (October 10, 1997), 1203 Off. Gaz. Pat. Office 63, 119-20 (October 21, 1997).

[2] In a nonprovisional application abandoned for failure to prosecute, the required reply may be met by the filing of a continuing application. In an application or patent, abandoned or lapsed for failure to pay the issue fee or any portion thereof, the required reply must be the payment of the issue fee or any outstanding balance thereof.

The statement submitted with the above petition is unclear and not in compliance with the required statement pursuant to 37 C.F.R. 1.137(b).

Further correspondence with respect to this matter should be addressed as follows:

By mail: Mail Stop PETITIONS
Commissioner for Patents
Post Office Box 1450
Alexandria, VA 22313-1450

By hand: Customer Window located at:

Randolph Building
401 Dulany Street
Alexandria, VA 22314

By fax: (571) 273-8300
ATTN: Office of Petitions

Telephone inquiries concerning this decision should be directed to the undersigned at (571) 272-3208.

Karen Creasy

Karen Creasy
Petitions Examiner
Office of Petitions

UNITED STATES PATENT AND TRADEMARK OFFICE

Commissioner for Patents
United States Patent and Trademark Office
P.O. Box 1450
Alexandria, VA 22313-1450
www.uspto.gov

MERCHANT & GOULD (MICROSOFT)
P.O. BOX 2903
MINNEAPOLIS MN 55402

COPY MAILED

NOV 22 2006

OFFICE OF PETITIONS

In re Application of :
John E. Brezak et al :
Application No. 09/886,146 : DECISION GRANTING PETITION
Filed: June 20, 2001 : UNDER 37 CFR 1.137(b)
Attorney Docket No. 14917.0461US01 :

This is a decision on the renewed petition under 37 CFR 1.137(b), filed November 2, 2006, to revive the above-identified application.

The petition is **GRANTED**.

The petition satisfies the conditions for revival pursuant to the provisions of 37 CFR 1.137(b) in that (1) the reply in the form of an RCE and a copy of the amendment submitted on July 13, 2006; (2) the petition fee; and (3) the required statement of unintentional delay have been received. Accordingly, the reply to the Final Rejection of February 27, 2006, is accepted as having been unintentionally delayed.

Telephone inquiries concerning this decision should be directed to the undersigned at (571) 272-3208.

This matter is being referred to Technology Center AU 2153.

Karen Creasy

Karen Creasy
Petitions Examiner
Office of Petitions

UNITED STATES PATENT AND TRADEMARK OFFICE

UNITED STATES DEPARTMENT OF COMMERCE
United States Patent and Trademark Office
Address: COMMISSIONER FOR PATENTS
P.O. Box 1450
Alexandria, Virginia 22313-1450
www.uspto.gov

APPLICATION NO.	FILING DATE	FIRST NAMED INVENTOR	ATTORNEY DOCKET NO.	CONFIRMATION NO.
09/886,146	06/20/2001	John E. Brezak	14917.0461US01	5712

27488 7590 12/27/2007
MERCHANT & GOULD (MICROSOFT)
P.O. BOX 2903
MINNEAPOLIS, MN 55402-0903

EXAMINER
BARQADLE, YASIN M

ART UNIT	PAPER NUMBER
2153	

MAIL DATE	DELIVERY MODE
12/27/2007	PAPER

Please find below and/or attached an Office communication concerning this application or proceeding.

The time period for reply, if any, is set in the attached communication.

UNITED STATES PATENT AND TRADEMARK OFFICE

COMMISSIONER FOR PATENTS
UNITED STATES PATENT AND TRADEMARK OFFICE
P.O. BOX 1450
ALEXANDRIA, VA 22313-1450
www.uspto.gov

Timothy B. Scull
Merchant & Gould (Microsoft)
P.O. Box 2903
Minneapolis, MN 55402-0903

MAILED

DEC 27 2007

TECHNOLOGY CENTER 2100

In re Application of:
John BREZAK et al.
Appl. No.: 09/886,146
Filed: June 20, 2001
For: METHODS AND SYSTEMS FOR CONTROLLING TH SCOPE OF DELEGATION OF AUTHENTICATION CREDENTIALS

DECISION ON PETITION UNDER 37 CFR § 1.59

This is a decision on the petition under 37 CFR § 1.59(b), filed on 11 December 2007, to expunge information submitted pursuant to MPEP § 724.05.

The petition is **DISMISSED**.

Petitioner requests that the information submitted on 11 December 2007 be expunged from the record if found not to be important to a reasonable examiner in deciding whether to allow the application to issue as a patent. The petition fee set forth in 37 CFR § 1.17(g) has been paid.

The petition is premature because the application has not been allowed or abandoned. Accordingly, it is not appropriate to make a final determination of whether or not the material requested to be expunged is "material," with "materiality" being defined as any information which the examiner considers as being important to a determination of patentability of the claims. Thus, the petition to expunge must be dismissed at this time.

During prosecution on the merits, the examiner will determine whether or not the information submitted on 11 December 2007 is considered to be "material." Once prosecution on the merits is closed, applicant may re-submit a petition to expunge the information. No further fee is required for such a second submission of a petition under 37 CFR § 1.59 to expunge information. If the information is not considered by the examiner to be material, the information will be expunged from the application and may be returned to applicant.

Any inquiry concerning this decision should be directed to the undersigned whose telephone number is (571) 272-3613.

Vincent N. Trans, SPRE/QAS
Technology Center 2100
Computer Architecture, Software, and
Information Security

UNITED STATES PATENT AND TRADEMARK OFFICE

UNITED STATES DEPARTMENT OF COMMERCE
United States Patent and Trademark Office
Address: COMMISSIONER FOR PATENTS
P.O. Box 1450
Alexandria, Virginia 22313-1450
www.uspto.gov

APPLICATION NO.	FILING DATE	FIRST NAMED INVENTOR	ATTORNEY DOCKET NO.	CONFIRMATION NO.
09/886,146	06/20/2001	John E. Brezak	14917.0461US01	5712

27488 7590 03/05/2010
MERCHANT & GOULD (MICROSOFT)
P.O. BOX 2903
MINNEAPOLIS, MN 55402-0903

EXAMINER
BARQADLE, YASIN M

ART UNIT	PAPER NUMBER
2456	

MAIL DATE	DELIVERY MODE
03/05/2010	PAPER

Please find below and/or attached an Office communication concerning this application or proceeding.

The time period for reply, if any, is set in the attached communication.

UNITED STATES PATENT AND TRADEMARK OFFICE

COMMISSIONER FOR PATENTS
UNITED STATES PATENT AND TRADEMARK OFFICE
P.O. BOX 1450
ALEXANDRIA, VA 22313-1450
www.uspto.gov

Rene' A. Pereyra
MERCHANT & GOULD (MICROSOFT)
P.O. BOX 2903
MINNEAPOLIS MN 55402-0903

In re Application of: BREZAK, John E. et. al. Application No. 09/886146 Filed: June 20, 200 Docket No. 14917.0461US01 Title: METHODS AND SYSTEMS FOR CONTROLLING THE SCOPE OF DELEGATION OF AUTHENTICATION CREDENTIALS	)))))))	**DECISION ON PETITION FOR EXPUNGING INFORMATION UNDER UNDER 37 CFR § 1.59**

This is a decision on the renew petition under 37 CFR § 1.59(b), filed on 18 February, 2010, to expunge information from the above identified application.

The petition is **GRANTED**.

Petitioner requests that the information submitted on 11 Dec 2007, be expunged from the record. Petitioner states that the information cited contains trade secrets and/or proprietary material which has not been made public. The petition fee set forth in 37 CFR 1.17(g) has been paid.

The information in question has been determined by the undersigned to not be material to the examination of the instant application.

Applicant is required to retain the expunged material(s) for the life of any patent which issues on the above-identified application.

The expunged material has been destroyed, the artifact folder closed and therefore the material will not be returned.

Any inquiry regarding this decision should be directed the undersigned whose telephone number is (571) 272-4147.

If attempts to reach the undersigned by telephone are unsuccessful, Beatriz Prieto, Quality Assurance Specialist, can be reached at (571) 272-3902.

/Kim Huynh/

Kim Huynh,
Quality Assurance Specialist
Technology Center 2400
Network, Multiplexing, Cable and Security

SPE RESPONSE FOR CERTIFICATE OF CORRECTION

Paper No.: _____

DATE : 5-15-06

TO SPE OF : ART UNIT 2178

SUBJECT : Request for Certificate of Correction for Appl. No.: 09/886199 Patent No.: 7000181

Please respond to this request for a certificate of correction within 7 days.

Please review the requested changes/corrections as shown in the **COCIN** document(s) in the IFW application image. No new matter should be introduced, nor should the scope or meaning of the claims be changed.

Please Drawings / Spec.

Please complete the response (see below) and forward the completed response to scanning using document code **COCX**.

E Young

Certificates of Correction Branch

703-308-9390 ext. _____

Thank You For Your Assistance

The request for issuing the above-identified correction(s) is hereby:

Note your decision on the appropriate box.

- ☐ **Approved** — All changes apply.
- ☑ **Approved in Part** — Specify below which changes **do not** apply.
- ☐ **Denied** — State the reasons for denial below.

Comments: All changes approved, except for the request regarding the "Drawings". There are no color drawings in the case for review.

SPE

2178
Art Unit

UNITED STATES PATENT AND TRADEMARK OFFICE

COMMISSIONER FOR PATENTS
UNITED STATES PATENT AND TRADEMARK OFFICE
P.O. BOX 1450
ALEXANDRIA, VA 22313-1450
www.uspto.gov

Ajaltown Kesrowan Lebanon
Ajaltown
Kesrowan LB LEBANON

COPY MAILED

JAN 21 2005

OFFICE OF PETITIONS

In re Application of :
Awad : DECISION ON PETITION
Application No. 09/886,221 :
Filed: June 21, 2001 :
For: SINK ELECTRICITY, :
GENERATION,COMPUTERS ON THREE :
DIGIT (0,1,2), OPERATION OF :
MACHINERY :

This is a decision on the petition under 37 CFR 1.137(a), filed November 1, 2004, to revive the above-identified application.

This application became abandoned November 6, 2002 for failure to timely reply to the non-final Office action mailed September 5, 2002. The non-final Office action set a three (3) month shortened statutory period of time for reply. No extensions of time in accordance with 37 CFR 1.136 were timely requested. Notice of Abandonment was mailed April 16, 2003.

A grantable petition under 37 CFR 1.137(a) must be accompanied by: (1) the required reply, unless previously filed; (2) the petition fee as set forth in 37 CFR 1.17(l); (3) a showing to the satisfaction of the Commissioner that the entire delay in filing the required reply from the due date for the reply until the filing of a grantable petition pursuant to 37 CFR 1.137(a) was unavoidable; and (4) any terminal disclaimer (and fee as set forth in 37 CFR 1.20(d)) required pursuant to 37 CFR 1.137(c).

The present petition fails to satisfy item (2) set forth above. Submission of the required petition fee is a prerequisite prior to treatment on the merits of a petition submitted under 37 CFR 1.137(a). Accordingly, the instant petition is hereby **DISMISSED WITHOUT PREJUDICE**.

Any renewed petition must be accompanied by the required petition fee, currently $250.00 for a small entity.

Any request for reconsideration of this decision must be submitted within **TWO (2) MONTHS** from mail date of this decision. Extensions of time under 37 CFR 1.136(a) are permitted. The

reconsideration request should include a cover letter entitled "Renewed Petition under 37 CFR 1.137(a)." This is not a final agency decision.

Telephone inquiries concerning this matter may be directed to the undersigned at (571) 272-3205.

Alesia M. Brown
Petitions Attorney
Office of Petitions

UNITED STATES PATENT AND TRADEMARK OFFICE

COMMISSIONER FOR PATENTS
UNITED STATES PATENT AND TRADEMARK OFFICE
P.O. BOX 1450
ALEXANDRIA, VA 22313-1450
www.uspto.gov

MAILED

FEB 2 4 2006

Technology Center 2100

Thomas E. Sisson
Jackson Walker L.L.P.
112 E. Pecan Street
Suite 2100
San Antonio, TX 78205

In re Application of: Chen-Tsai LEE Application No. 09/886,225 Attorney Docket No. P-3641.147 Filed: June 21, 2001 For: MEMORY INTERLACE-CHECKING METHOD	DECISION ON PETITION TO WITHDRAW HOLDING OF ABANDONMENT UNDER 37 CFR §1.181

This is a decision on the petition filed March 17, 2005, entitled "Petition for Revival of an Application for patent abandoned Unintentionally under 37 C.F.R. §1.137(a)". The petition is being treated as a petition to withdraw the holding of abandonment of the above-identified application, under 37 C.F.R. §1.181.

The instant application was indicated to be abandoned for failure to properly respond to the Office action (Final Rejection) mailed February 27, 2004. A Notice of Abandonment was mailed on March 1, 2005.

The Petition is **DENIED**.

Recent Prosecution History

On September 8, 2003, a Non-Final Office action was mailed.

On December 11, 2003, an amendment was filed in response to the Non-Final Office action.

On February 27, 2004, a Final Office action was mailed.

On June 21, 2004, an after final amendment and response were filed along with a one-month extension of time.

On December 6, 2004, a status letter was filed.

On December 29, 2004, a copy of the amendment and response filed on June 21, 2004 was filed via facsimile, along with a copy of the request for a one-month extension of time.

On February 23, 2005, an Advisory Action was mailed, indicating that the amendment submitted after Final Rejection on June 21, 2004 (copy filed December 29, 2004) would be entered for purposes of appeal but that the amendment and response failed to place the instant application in condition for allowance.

On March 1, 2005, a Notice of Abandonment was mailed.

On March 17, 2005, the instant petition was filed.

Relief Requested

The instant petition requests the following relief: withdrawal of the holding of abandonment.

A petition under 37 CFR §1.181 must include: (1) a statement of facts involved and (2) the point or points to be reviewed and the action requested. ***Note, the mere filing of a petition will not stay any period for reply that may be running against the application, nor act as a stay of other proceedings.*** In addition § 1.181(f) sets forth: ***any petition under this part not filed within two months of the mailing date of the action or notice from which relief is requested may be dismissed as untimely*** [emphasis added]. Further, when a petition is taken from an action or requirement of an examiner in the ex parte prosecution of an application, ... it may be required that there have been a proper request for reconsideration (37 CFR §1.111) and a repeated action by the examiner.

The petition initially filed on March 17, 2005 includes elements (1) and (2) above and was filed within two months from notification of the abandonment. No fee under 37 C.F.R. §1.181 is required for this petition.

Basis of Opinion

37 CFR §1.113 Final rejection or action
(c) Reply to a final rejection or action must include cancellation of, or appeal from the rejection of, each rejected claim. If any claim stands allowed, the reply to a final rejection or action must comply with any requirements or objections as to form.

37 CFR §1.116 Amendments and affidavits or other evidence after final action and prior to appeal.
(a) An amendment after final action must comply with § 1.114 or this section.
(b) After a final rejection or other final action (§ 1.113) in an application or in an ex parte reexamination filed under § 1.510, or an action closing prosecution (§ 1.949) in an inter partes reexamination filed under § 1.913, but before or on the same date of filing an appeal (§ 41.31 or § 41.61 of this title):
(1) An amendment may be made canceling claims or complying with any requirement of form expressly set forth in a previous Office action;
(2) An amendment presenting rejected claims in better form for consideration on appeal may be admitted; or

3) An amendment touching the merits of the application or patent under reexamination may be admitted upon a showing of good and sufficient reasons why the amendment is necessary and was not earlier presented.

37 CFR §1.134 Time period for reply to an Office action.
An Office action will notify the applicant of any non-statutory or shortened statutory time period set for reply to an Office action. ***Unless the applicant is notified in writing that a reply is required in less than six months, a maximum period of six months is allowed.***

35 U.S.C. 133 Time for prosecuting application.
Upon failure of the applicant to prosecute the application within six months after any action therein, of which notice has been given or mailed to the applicant, or within such shorter time, not less than thirty days, as fixed by the Director in such action, ***the application shall be regarded as abandoned by the parties thereto***, unless it is shown to the satisfaction of the Director that such delay was unavoidable.

37 C.F.R. §1.135(b) Abandonment for failure to reply within time period.
(b) Prosecution of an application to save it from abandonment pursuant to paragraph (a) of this section must include such complete and proper reply as the condition of the application may require. ***The admission of, or refusal to admit, any amendment after final rejection or any amendment not responsive to the last action, or any related proceedings, will not operate to save the application from abandonment.***

Decision

In support to the petition, Applicant provides: a copy of the Notice of Abandonment; a copy of the Advisory Action; a copy of the amendment, response, request for one-month extension of time (with a check in the amount of $110.00) and copy of the post-card receipt with an OIPE date of June 21, 2004; as well as a copy of the status letter of December 6, 2004; and an auto reply facsimile transmission for copies of papers submitted on December 29, 2004.

In order to clarify the prosecution record, a brief analysis will be proffered. Following the Final Office action (mailed February 27, 2004), Applicant submitted a timely filed amendment under 37 CFR §1.116 on June 21, 2004. Unfortunately, due to Office scanning and processing delays, the amendment was not forwarded to the Examiner until February 10, 2005 for action on the merits. As identified in the Advisory Action mailed on February 23, 2005, the amendment submitted June 21, 2004 (copy provided December 29, 2004), did not satisfy After Final practice under 37 C.F.R. §1.116 for entry of the response by placing the application clearly in condition for allowance, but was enterable as set forth in 37 CFR §1.116(b)(2), pending the filing of a Notice of Appeal.

However, and in accordance with 37 CFR §1.135(b), Applicant failed to file a timely Notice of Appeal within the six-month statutory period set forth in the final Office action (six month period expired August 27, 2004) in order to save the instant application from abandonment. Applicant is reminded "***the admission of, or refusal to admit, any amendment after final rejection or any amendment not responsive to the last action, or any related proceedings, will not operate to save the application from abandonment***".

Finally, since expiration of the statutory period of sixth months from the mailing of the Final rejection on February 27, 2004 had expired prior to the mailing of the Notice of Abandonment on March 1, 2005, the holding of abandonment is maintained and deemed to be proper in accordance with 35 U.S.C. 133.

The petition to withdraw the holding of abandonment is therefore **DENIED.**

If Applicant desires to continue prosecution of this application, Applicant may wish to file a complete petition to revive under 37 CFR §1.137(a) (unavoidable delay) or 37 CFR §1.137(b) (unintentional delay) as discussed below.

I. Unavoidable Delay

A grantable petition to revive an abandoned application under 37 CFR §1.137(a) must be accompanied by:
(1) The reply required to the outstanding Office action or notice, unless previously filed;
(2) The petition fee as set forth in §1.17(l);
(3) A showing to the satisfaction of the Director that the entire delay in filing the required reply from the due date for the reply until the filing of a grantable petition pursuant to this paragraph was unavoidable; and
(4) Any terminal disclaimer (and fee as set forth in §1.20(d)) required pursuant to paragraph (d) of this section.

The showing of requirements can be met by submission of a statement of facts establishing that the delay in filing the reply was unavoidable. This includes a satisfactory showing that the cause of the delay resulting in failure to reply in a timely fashion to the Office action was unavoidable. Diligence during the time period between abandonment and filing of the petition to revive must also be shown.

As an alternative to filing a petition for unavoidable abandonment, a petition for revival of an application abandoned unintentionally under 37 CFR §1.137(b) might be appropriate.

II. Unintentional Delay

A grantable petition to revive an abandoned application under 37 CFR §1.137(b) must be accompanied by:
(1) The reply required to the outstanding Office action or notice, unless previously filed;

(2) The petition fee as set forth in §1.17(m);
(3) A statement that the entire delay in filing the required reply from the due date for the reply until the filing of a grantable petition pursuant to this paragraph was unintentional. The Director may require additional information where there is a question whether the delay was unintentional; and
(4) Any terminal disclaimer (and fee as set forth in §1.20(d)) required pursuant to paragraph (d) of this section.

The required items, including appropriate fee, should be promptly submitted under a cover letter entitled "Petition to Revive under 37 CFR §1.137(a) or (b)", as deemed appropriate.

Telephone inquiries should be directed to Special Programs Examiner Brian Johnson at (571) 272-3595.

Jack Harvey

Jack Harvey, Group Director
Technology Center 2100
Computer Architecture, Software, and Information Security

UNITED STATES PATENT AND TRADEMARK OFFICE

Commissioner for Patents
United States Patent and Trademark Office
P.O. Box 1450
Alexandria, VA 22313-1450
www.uspto.gov

COPY MAILED
NOV 28 2006
OFFICE OF PETITIONS

JIANQ CHYUN INTELLECTUAL PROPERTY OFFICE
7 FLOOR-1, NO. 100
ROOSEVELT ROAD, SECTION 2
TAIPEI 100 TW TAIWAN

In re Application of	:	
Chen-Tsai Lee	:	
Application No. 09/886,225	:	ON PETITION
Filed: June 21, 2001	:	
Attorney Docket No. 15635-US-PA	:	

This is a decision on the petition, filed September 6, 2005, to revive the above-identified application under 37 CFR 1.137(b).

The application became abandoned for a failure to reply in a timely manner to the final Office action mailed February 27, 2004. A Notice of Abandonment was mailed on March 1, 2005. In response, on May 17, 2006 a petition under 37 CFR 1.137(b) was filed, including a Notice of Appeal and an Appeal Brief. It is noted that the filing on May 17, 2006, did not include the fee for filing the Appeal Brief as set forth in 37 CFR 41.20(b)(2). On July 3, 2006, authorization to charge the fee for filing the Appeal Brief was filed, along with a copy of the papers filed May 17, 2006.

The petition is found to comply with the requirements of 37 CFR 1.137(b). Accordingly, the petition is **GRANTED.**

The application is being referred to Technology Center AU 2133.

Telephone inquiries concerning this decision may be directed to the undersigned at (571) 272-3204. Inquiries relating to the prosecution of the application should be referred to the Technology Center.

Sherry D. Brinkley
Petitions Examiner
Office of Petitions

UNITED STATES PATENT AND TRADEMARK OFFICE

Commissioner for Patents
United States Patent and Trademark Office
P. O. Box 1450
Alexandria, VA 22313-1450
www.uspto.gov

Paper No. ____

COPY MAILED

AUG 2 5 2003

OFFICE OF PETITIONS

OBLON SPIVAK McCLELLAND MAIER & NEUSTADT PC
1940 DUKE STREET
ALEXANDRIA, VA 22314

OIPE JC139
NOV 2 5 2003
PATENT & TRADEMARK OFFICE

In re Application of
Tetsuya Kawanishi
Application No. 09/886,251
Filed: June 22, 2001
Attorney Docket No. 210232US2

: DECISION GRANTING PETITION
: UNDER 37 CFR 313(c)(2)

This is a decision on the petition, filed August 22, 2003, under 37 CFR 1.313(c)(2) to withdraw the above-identified application from issue after payment of the issue fee.

The petition is **GRANTED**.

The above-identified application is withdrawn from issue for consideration of a submission under 37 CFR 1.114 (request for continued examination). See 37 CFR 1.313(c)(2).

Petitioner is advised that the issue fee paid on May 28, 2003 in the abov -identified application cannot be refunded. If, however, the above-identified application is again allowed, petitioner may request that it be applied towards the issue fee required by the new Notice of Allowance.[1]

Telephone inquiries should be directed to the undersigned at (703) 305-8680.

Upon receipt of the file in the Office of Petitions, the file will be forwarded to Technology Center AU 2873 for processing of the request for continued examination under 37 CFR 1.114 and for consideration of the concurrently filed Information Disclosure Statement.

Frances Hicks
Frances Hicks
Petitions Examiner
Office of Petitions
Office of the Deputy Commissioner
for Patent Examination Policy

RECEIVED: 8/26/03
OBLON, SPIVAK, McCLELLAND
MAIER & NEUSTADT, P.C.
DOCKETING DEPT.
Initials/Date Docketed: 8/26/03
Type of Resp(s): ____
Due Date(s): ____

[1] The request to apply the issue fee to the new Notice may be satisfied by completing and returning the new Issue Fee Transmittal Form PTOL-85(b), which includes the following language thereon: "Commissioner for Patents is requested to apply the Issue Fee and Publication Fee (if any) or re-apply any previously paid issue fee to the application identified above." Petitioner is advised that, whether a fee is indicated as being due or not, the Issue Fee Transmittal Form **must** be completed and timely submitted to avoid abandonment. Note the language in bold text on the first page of the Notice of Allowance and Fee(s) Due (PTOL-85).

DOCKET NO.: 210232US2/ay

OIPE JC139 NOV 2 5 2003 PATENT & TRADEMARK OFFICE

IN THE UNITED STATES PATENT AND TRADEMARK OFFICE

IN RE APPLICATION OF: GROUP: 2873

Tetsuya KAWANISHI

SERIAL NO: 09/886,251 EXAMINER: MARTINEZ, JOSEPH P

FILED: June 22, 2001

FOR: OPTICAL FREQUENCY CONVERTER USING RECIPROCATING MODULATION

APPLICATION OF PREVIOUSLY PAID ISSUE FEE IN ACCORDANCE WITH SECTION 1308.01 MPEP

Mail Stop Issue Fee
Commissioner for Patents
P.O. Box 1450
Alexandria, VA 22313-1450

Sir:

The above-identified application was withdrawn from Issue after payment of the Issue Fee in the amount of $1630.00 (including the $300.00 for Publication Fee and $30.00 fee for advanced patent copies order) Enclosed is a Credit Card Form in the amount of $30.00 to include the increase in the Issue Fee. Also enclosed herewith is the decision granting the Petition.

The application has now been allowed again and since a refund of the previously paid Issue Fee has not been requested, it is now requested that the previously paid Issue Fee be applied to the Issue Fee being paid herewith.

Respectfully Submitted,

OBLON, SPIVAK, McCLELLAND,
MAIER & NEUSTADT, P.C.

Joseph A. Scafetta Jr.

Marvin J. Spivak
Attorney of Record
Registration No.: 24,913
Joseph A. Scafetta, Jr.
Registration No. 26,803

Customer Number
22850

Tel. (703) 413-3000
Fax. (703) 413-2220
(OSMMN 08/03)

IN THE UNITED STATES PATENT AND TRADEMARK OFFICE

Inventor	:	Koji Takeguchi, et al.
U. S. Patent No.	:	7,239,649
Serial No.	:	09/886,268
Issued	:	July 3, 2007
For	:	TRANSMISSION SYSTEM

November 29, 2007

Director of the U.S. Patent and
Trademark Office
P.O. Box 1450
Alexandria, VA 22313-1450

Approved
T.H.
9/29/2008

REQUEST FOR A CERTIFICATE OF CORRECTION

SIR:

We request a Certificate of Correction to correct the **Domestic Priority Data** which was inadvertently listed as: **PCT/JP99/07521**. Please change the same to read: **PCT/JP00/07521**.

Attached, please find a copy of the Declaration filed on October 2, 2001 and a copy of the Corrected Filing Receipt dated June 11, 2002.

Any fee due as a result of this paper, may be charged to Deposit account No.50-1290.

Respectfully submitted,

/ Dexter T. Chang /
Dexter T. Chang
Reg. No. 44,071

Customer No.: 026304
KATTEN MUCHIN ROSENMAN LLP
575 Madison Avenue, 15th Floor
New York, NY 10022-2585
(Tel) 212-940-8800
Docket No.: FUJI 18.748

PTO/SB/ 44 (10-96)
Approved for use through 6/30/99. OMB 0651-0033
Patent and Trademark Office; U.S. DEPARTMENT OF COMMERCE
Under the Paperwork Reduction Act of 1995, no persons are required to respond to a collection of information unless it displays a valid OMB control number.
(Also Form PTO-1050)

UNITED STATES PATENT AND TRADEMARK OFFICE
CERTIFICATE OF CORRECTION

PATENT NO : 7,239,649

DATED : July 3, 2007

INVENTOR(S) : Koji Takeguci, et al.

It is certified that error appears in the above-identified patent and that said Letters Patent are hereby corrected as shown below:

The entry numbered (63) on the front page of the patent in the left column is deleted and the following is substituted:

Related U.S. Application Data

(63) Continuation of application No. PCT/JP00/07521, filed on October 26, 2000.

MAILING ADDRESS OF SENDER:
Katten Muchin Rosenman LLP
575 Madison Avenue
New York, New York 10022-2585

PATENT NO. 7,239,649

No. of additional copies

Burden Hour Statement: This form is estimated to take 1.0 hour to complete. Time will vary depending upon the needs of the individual case. Any comments on the amount of time you are required to complete this form should be sent to the Chief Information Officer, Patent and Trademark Office, Washington, DC 20231. DO NOT SEND FEES OR COMPLETED FORMS TO THIS ADDRESS. SEND TO: Assistant Commissioner for Patents, Washington, DC 20231.

RECEIVED
JUN 18
ROSENMAN & COLIN LLP
IP DEPARTMENT

UNITED STATES PATENT AND TRADEMARK OFFICE

COMMISSIONER FOR PATENTS
UNITED STATES PATENT AND TRADEMARK OFFICE
WASHINGTON, D.C. 20231
www.uspto.gov

APPLICATION NUMBER	FILING DATE	GRP ART UNIT	FIL FEE REC'D	ATTY.DOCKET.NO	DRAWINGS	TOT CLAIMS	IND CLAIMS
09/886,268	06/21/2001	2633	1080	100794-09745(FUJR 18.748)	21	14	6

CONFIRMATION NO. 6901

CORRECTED FILING RECEIPT

OC000000008266284

Helfgott & Karas, P.C.
Suite 6024
350 Fifth Avenue
New York, NY 10118

Date Mailed: 06/11/2002

Receipt is acknowledged of this nonprovisional Patent Application. It will be considered in its order and you will be notified as to the results of the examination. Be sure to provide the U.S. APPLICATION NUMBER, FILING DATE, NAME OF APPLICANT, and TITLE OF INVENTION when inquiring about this application. Fees transmitted by check or draft are subject to collection. Please verify the accuracy of the data presented on this receipt. **If an error is noted on this Filing Receipt, please write to the Office of Initial Patent Examination's Filing Receipt Corrections, facsimile number 703-746-9195. Please provide a copy of this Filing Receipt with the changes noted thereon. If you received a "Notice to File Missing Parts" for this application, please submit any corrections to this Filing Receipt with your reply to the Notice. When the USPTO processes the reply to the Notice, the USPTO will generate another Filing Receipt incorporating the requested corrections (if appropriate).**

Applicant(s)

Koji Takeguchi, Richardson, TX;
Ryuichi Moriya, Kawasaki, JAPAN;
Nobuhiro Rikitake, Kawasaki, JAPAN;
Hideki Matsui, Richardson, TX;
Hirotaka Morita, Kawasaki, JAPAN;

Domestic Priority data as claimed by applicant

THIS APPLICATION IS A CON OF PCT/JP00/07521 10/26/2000

Foreign Applications

JAPAN JP99/06013 10/28/1999

If Required, Foreign Filing License Granted 08/16/2001

Projected Publication Date: Not Applicable

Non-Publication Request: No

Early Publication Request: No

Title

Transmission system

Preliminary Class

370

LICENSE FOR FOREIGN FILING UNDER
Title 35, United States Code, Section 184
Title 37, Code of Federal Regulations, 5.11 & 5.15

GRANTED

The applicant has been granted a license under 35 U.S.C. 184, if the phrase "IF REQUIRED, FOREIGN FILING LICENSE GRANTED" followed by a date appears on this form. Such licenses are issued in all applications where the conditions for issuance of a license have been met, regardless of whether or not a license may be required as set forth in 37 CFR 5.15. The scope and limitations of this license are set forth in 37 CFR 5.15(a) unless an earlier license has been issued under 37 CFR 5.15(b). The license is subject to revocation upon written notification. The date indicated is the effective date of the license, unless an earlier license of similar scope has been granted under 37 CFR 5.13 or 5.14.

This license is to be retained by the licensee and may be used at any time on or after the effective date thereof unless it is revoked. This license is automatically transferred to any related applications(s) filed under 37 CFR 1.53(d). This license is not retroactive.

The grant of a license does not in any way lessen the responsibility of a licensee for the security of the subject matter as imposed by any Government contract or the provisions of existing laws relating to espionage and the national security or the export of technical data. Licensees should apprise themselves of current regulations especially with respect to certain countries, of other agencies, particularly the Office of Defense Trade Controls, Department of State (with respect to Arms, Munitions and Implements of War (22 CFR 121-128)); the Office of Export Administration, Department of Commerce (15 CFR 370.10 (j)); the Office of Foreign Assets Control, Department of Treasury (31 CFR Parts 500+) and the Department of Energy.

NOT GRANTED

No license under 35 U.S.C. 184 has been granted at this time, if the phrase "IF REQUIRED, FOREIGN FILING LICENSE GRANTED" DOES NOT appear on this form. Applicant may still petition for a license under 37 CFR 5.12, if a license is desired before the expiration of 6 months from the filing date of the application. If 6 months has lapsed from the filing date of this application and the licensee has not received any indication of a secrecy order under 35 U.S.C. 181, the licensee may foreign file the application pursuant to 37 CFR 5.15(b).

PTO/SB/106 (8-96)
Approved for use through 9/30/98. OMB 0651-0032
Patent and Trademark Office; U.S. DEPARTMENT OF COMMERCE
Under the Paperwork Reduction Act of 1995, no persons are required to respond to a collection of information unless it displays a valid OMB control number.

Declaration and Power of Attorney For Patent Application

特許出願宣言書及び委任状

Japanese Language Declaration

日本語宣言書

下記の氏名の発明者として、私は以下の通り宣言します。

As a below named inventor, I hereby declare that:

私の住所、私書箱、国籍は下記の私の氏名の後に記載された通りです。

My residence, post office address and citizenship are as stated next to my name.

下記の名称の発明に関して請求範囲に記載され、特許出願している発明内容について、私が最初かつ唯一の発明者（下記の氏名が一つの場合）もしくは最初かつ共同発明者であると（下記の名称が複数の場合）信じています。

I believe I am the original, first and sole inventor (if only one name is listed below) or an original, first and joint inventor (if plural names are listed below) of the subject matter which is claimed and for which a patent is sought on the invention entitled

TRANSMISSION SYSTEM

上記発明の明細書（下記の欄でx印がついていない場合は、本書に添付）は、

the specification of which is attached hereto unless the following box is checked:

☐ __月__日に提出され、米国出願番号または特許協定条約国際出願番号を_____とし、（該当する場合）_____に訂正されました。

☐ was filed on June 21, 2001 as United States Application Number or PCT International Application Number 09/886,268 and was amended on _____ (if applicable).

私は、特許請求範囲を含む上記訂正後の明細書を検討し、内容を理解していることをここに表明します。

I hereby state that I have reviewed and understand the contents of the above identified specification, including the claims, as amended by any amendment referred to above.

私は、連邦規則法典第３７編第１条５６項に定義されるとおり、特許資格の有無について重要な情報を開示する義務があることを認めます。

I acknowledge the duty to disclose information which is material to patentability as defined in Title 37, Code of Federal Regulations, Section 1.56.

Burden Hour Statement: This form is estimated to take 0.4 hours to complete. Time will vary depending upon the needs of the individual case. Any comments on the amount of time you are required to complete this form should be sent to the Chief Information Officer, Patent and Trademark Office, Washington, DC 20231. DO NOT SEND FEES OR COMPLETED FORMS TO THIS ADDRESS. SEND TO: Commissioner of Patents and Trademarks, Washington, DC 20231.

PTO/SB/106 (8-96)
Approved for use through 9/30/98. OMB 0651-0032
Patent and Trademark Office; U.S. DEPARTMENT OF COMMERCE
Under the Paperwork Reduction Act of 1995, no persons are required to respond to a collection of information unless it displays a valid OMB control number.

Japanese Language Declaration
(日本語宣言書)

私は、米国法典第３５編１１９条(a)-(d)項又は３６５条(b)項に基き下記の、米国以外の国の少なくとも一ヵ国を指定している特許協力条約３６５(a)項に基ずく国際出願、又は外国での特許出願もしくは発明者証の出願についての外国優先権をここに主張するとともに、優先権を主張している、本出願の前に出願された特許または発明者証の外国出願を以下に、枠内をマークすることで、示しています。

I hereby claim foreign priority under Title 35, United States Code, Section 119 (a)-(d) or 365(b) of any foreign application(s) for patent or inventor's certificate, or 365(a) of any PCT International application which designated at least one country other than the United States, listed below and have also identified below, by checking the box, any foreign application for patent or inventor's certificate, or PCT International application having a filing date before that of the application on which priority is claimed.

Prior Foreign Application(s)
外国での先行出願

(Number) (番号)	(Country) (国名)	(Day/Month/Year Filed) (出願年月日)	Priority Not Claimed 優先権主張なし
PCT/JP99/06013	PCT	28/10/99	☐
			☐

私は、第３５編米国法典１１９条(e)項に基いて下記の米国特許出願規定に記載された権利をここに主張いたします。

I hereby claim the benefit under Title 35, United States Code, Section 119(e) of any United States provisional application(s) listed below.

(Application No.) (出願番号)	(Filing Date) (出願日)

私は、下記の米国法典第３５編１２０条に基いて下記の米国特許出願に記載された権利、又は米国を指定している特許協力条約３６５条(c)に基ずく権利をここに主張します。また、本出願の各請求範囲の内容が米国法典第３５編１１２条第１項又は特許協力条約で規定された方法で先行する米国特許出願に開示されていない限り、その先行米国出願書提出日以降で本出願書の日本国内または特許協力条約国際提出日までの期間中に入手された、連邦規則法典第３７編１条５６項で定義された特許資格の有無に関する重要な情報について開示義務があることを認識しています。

I hereby claim the benefit under Title 35, United States Code, Section 120 of any United States application(s), or 365(c) of any PCT International application designating the United States, listed below and, insofar as the subject matter of each of the claims of this application is not disclosed in the prior United States or PCT International application in the manner provided by the first paragraph of Title 35, United States Code Section 112, I acknowledge the duty to disclose information which is material to patentability as defined in Title 37, Code of Federal Regulations, Section 1.56 which became available between the filing date of the prior application and the national or PCT International filing date of application.

(Application No.) (出願番号)	(Filing Date) (出願日)	(Status: Patented, Pending, Abandoned) (現況：特許許可済、係属中、放棄済)
PCT/JP00/07521	26/10/00	Pending

私は、私自身の知識に基ずいて本宣言書中で私が行なう表明が真実であり、かつ私の入手した情報と私の信じるところに基ずく表明が全て真実であると信じていること、さらに故意になされた虚偽の表明及びそれと同等の行為は米国法典第１８編第１００１条に基ずき、罰金または拘禁、もしくはその両方により処罰されること、そしてそのような故意による虚偽の声明を行なえば、出願した、又は既に許可された特許の有効性が失われることを認識し、よってここに上記のごとく宣誓を致します。

I hereby declare that all statements made herein of my own knowledge are true and that all statements made on information and belief are believed to be true; and further that these statements were made with the knowledge that willful false statements and the like so made are punishable by fine or imprisonment, or both, under Section 1001 of Title 18 of the United States Code and that such willful false statements may jeopardize the validity of the application or any patent issued thereon.

PTO/SB/106 (8-96)
Approved for use through 9/30/98. OMB 0651-0032
Patent and Trademark Office; U.S. DEPARTMENT OF COMMERCE

Under the Paperwork Reduction Act of 1995, no persons are required to respond to a collection of information unless it displays a valid OMB control number.

Japanese Language Declaration
(日本語宣言書)

委任状： 私は下記の発明者として、本出願に関する一切の手続きを米特許商標局に対して遂行する弁理士または代理人として、下記の者を指名いたします。（弁護士、または代理人の氏名及び登録番号を明記のこと）

POWER OF ATTORNEY: As a named inventor, I hereby appoint the following attorney(s) and/or agent(s) to prosecute this application and transact all business in the Patent and Trademark Office connected therewith *(list name and registration number)*

Aaron B. KARAS, Reg. No. 18,923; Samson HELFGOTT, Reg. No. 23,072 and Leonard COOPER Reg. No.27,625

書類送付先

Send Correspondence to:

HELFGOTT & KARAS, P.C.
Empire State Building, 60th Floor
New York, New York 10118
United States of America

直接電話連絡先：（名前及び電話番号）

Direct Telephone Calls to: *(name and telephone number)*

Helfgott & Karas, P.C.
(212) 643-5000

唯一または第一発明者名	Full name of sole or first inventor Koji TAKEGUCHI
発明者の署名　日付	Inventor's signature Koji Takeguchi ~~Koji Takeguchi~~ Date June 18, 2001
住所	Residence Texas, U.S.A.
国籍	Citizenship Japanese
私書箱	Post Office Address c/o FUJITSU NETWORK COMMUNICATIONS, Inc., 2801 Telecom
	Parkway Richardson, Texas 75082 U.S.A.
第二共同発明者	Full name of second joint inventor, if any Ryuichi MORIYA
第二共同発明者　日付	Second inventor's signature Ryuichi Moriya Date June 18, 2001
住所	Residence Kawasaki, Japan
国籍	Citizenship Japanese
私書箱	Post Office Address c/o FUJITSU LIMITED, 1-1, Kamikodanaka 4-chome, Nakahara-ku,
	Kawasaki-shi, Kanagawa 211-8588 Japan

（第三以降の共同発明者についても同様に記載し、署名をすること）

(Supply similar information and signature for third and subsequent joint inventors.)

第三共同発明者		Full name of third joint inventor, if any Nobuhiro RIKITAKE
第三共同発明者	日付	Third inventor's signature Date Nobuhiro Rikitake June 18, 2001
住　所		Residence Kawasaki, Japan
国　籍		Citizenship Japanese
私書箱		Post Office Address c/o FUJITSU LIMITED, 1-1, Kamikodanaka 4-chome, Nakahara-ku, Kawasaki-shi, Kanagawa 211-8588 Japan
第四共同発明者		Full name of fourth joint inventor, if any Hideki MATSUI
第四共同発明者	日付	Fourth inventor's signature Date Hideki Matsui June 18, 2001
住　所		Residence Texas, U.S.A.
国　籍		Citizenship Japanese
私書箱		Post Office Address c/o FUJITSU NETWORK COMMUNICATIONS, Inc., 2801 Telecom Parkway Richardson, Texas 75082 U.S.A.

第五共同発明者		Full name of fifth joint inventor, if any Hirotaka MORITA
第五共同発明者	日付	Fifth inventor's signature Date Hirotaka Morita June 18, 2001
住　所		Residence Kawasaki, Japan
国　籍		Citizenship Japanese
私書箱		Post Office Address c/o FUJITSU LIMITED, 1-1, Kamikodanaka 4-chome, Nakahara-ku, Kawasaki-shi, Kanagawa 211-8588 Japan
第六共同発明者		Full name of sixth joint inventor, if any
第六共同発明者	日付	Sixth inventor's signature Date
住　所		Residence
国　籍		Citizenship
私書箱		Post Office Address

SPE RESPONSE FOR CERTIFICATE OF CORRECTION

Paper No.:20080930

DATE : October 4, 2008

TO SPE OF : ART UNIT 2616

SUBJECT : Request for Certificate of Correction on Patent No.: 7239649 B2

A response is requested with respect to the accompanying request for a certificate of correction.

Please complete this form and return with file, within **7** days to:
Certificates of Correction Branch - PK 3-910
Palm location **7590** - Tel. No. 305-8201

With respect to the change(s) requested, correcting Office and/or Applicant's errors, should the patent read as shown in the certificate of correction? No new matter should be introduced, nor should the scope or meaning of the claims be changed.

Thank You For Your Assistance **Certificates of Correction Branch**

The request for issuing the above-identified correction(s) is hereby:
Note your decision on the appropriate box.

☒ **Approved** **All** changes apply.

☐ **Approved in Part** Specify below which changes **do not** apply.

☐ **Denied** State the reasons for denial below.

Comments:

SPE: Chi Pham **Art Unit** 2616

UNITED STATES PATENT AND TRADEMARK OFFICE

COMMISSIONER FOR PATENTS
UNITED STATES PATENT AND TRADEMARK OFFICE
WASHINGTON, D.C. 20231
www.uspto.gov

Paper No.9

Paul S. Madan
Madan Mossman & Sriram
2603 Augusta, Suite 700
Houston, TX 77057-1130

COPY MAILED
MAY 24 2002
OFFICE OF PETITIONS

In re Application of
Selvakumar et al.
Application No. 09/886,320
Filed: June 21, 2001
Attorney Docket No. IO-1016-US

ON PETITION

This is a decision on the petition under 37 CFR 1.137(b), filed April 16, 2002, to revive the above-identified application.

The petition is **GRANTED**.

The above-identified application became abandoned for failure to reply in a timely manner to the Notice to File Missing Parts of Application (Notice) mailed August 31, 2001. The Notice set a period for reply of two (2) months from the mail date of the Notice. No extensions of time under the provisions of 37 CFR 1.136(a) were obtained. Accordingly, the above-identified application became abandoned on November 1, 2001.

The application file is being forwarded to the Office of Initial Patent Examination for further processing.

Telephone inquiries concerning this decision should be directed to Latrice Bond at (703) 308-6911.

Latrice Bond

Latrice Bond
Paralegal Specialist
Office of Petitions
Office of the Deputy Commissioner
for Patent Examination Policy

UNITED STATES DEPARTMENT OF COMMERCE
Patent and Trademark Office
ASSISTANT SECRETARY OF COMMERCE AND
COMMISSIONER OF PATENTS AND TRADEMARKS
Washington, DC 2023

#4

December 13, 2002

Annette S. Parent
Townsend and Townsend and Crew
Two Embarcadero Center 8th Floor
San Francisco, CA 94111-3834

In re application of:
Skeiky et al DECISION ON PETITION
Serial No.: 09/886,349
Filed: June 20, 2001
For: FUSION PROTEINS OF MYCOBRACTERIUM TUBERCULOSIS

This is a decision on the petition received on August 12, 2002, to withdraw the holding of abandonment in the above-identified application.

The above-identified application became abandoned for failure to reply within the meaning of 37 C.F.R. 1.113 in timely manner to the Notice to File Missing Parts of Application mailed September 20,2001. Which set a shortened statutory period for reply of two (2) months. Accordingly, this application became abandoned October 23, 2001.

On August 12, 2002, the office received a communication from the attorney of record. Enclosed was an acknowledgment that the attorney never received the Notice to File Missing Parts mailed on September 20, 200l.

The evidence submitted is sufficient to establish that the petitioners never received the Notice to File Missing Parts mailed on September 20, 2000.

The petition is hereby GRANTED.

The office regrets any inconvenience this may have caused the client.

The petition fee will be returned to counsels Deposit Account 20-1430.

The application has been completed for release to Technology Center 1642.

Telephone inquiries concerning this matter may be directed to Doshie E. Day at (703) 308-3640.

Doshie Day

Doshie E. Day
Program Management Assistant
Office Initial Patent Examination

OIPE JC144
JAN 0 3 2003
PATENT & TRADEMARK OFFICE

I hereby certify that this correspondence is being deposited with the United States Postal Service with sufficient postage as first class mail in an envelope addressed to: Box DAC, Assistant Commissioner for Patents, Washington, D.C. 20231 on this date: August 7, 2002

By Jana Kane
Printed Name: Jana Kane

PATENT

Atty. Docket No.: 014058-009070US

RECEIVED
MAR 1 2 2003
TECH CENTER 1600/2900

IN THE UNITED STATES PATENT AND TRADEMARK OFFICE

In re application of:

SKEIKY, et al.

US Application No.: 09/886,349

Filed: June 20, 2001

For: FUSION PROTEINS OF MYCOBACTERIUM TUBERCULOSIS

Examiner: Not Yet Assigned

Art Unit: Not Yet Assigned

PETITION UNDER 37 C.F.R. § 1.181(a) TO WITHDRAW HOLDING OF ABANDONMENT

Box DAC
Assistant Commissioner for Patents
Washington, D.C. 20231

RECEIVED
JAN 0 6 2003
OFFICE OF PETITIONS

Sir:

Applicants respectfully petition under 37 C.F.R. § 1.181(a) to withdraw the holding of abandonment for the above-referenced patent application for failure to receive a Notice to File Missing Parts. The following items are enclosed herewith:

1. Copy of PTO date-stamped postcard showing an application filing date of June 20, 2001 (Exhibit A).

2. Copy of the docket record where the nonreceived Office communication would have been entered, had it been received (Exhibit B).

3. Executed formal documents, including declarations under 37 C.F.R. § 1.63, an assignment, a power of attorney, and a statement under 37 C.F.R. § 3.73(b), for filing in the above-referenced application (Exhibits C-F).

REMARKS

The above-referenced application was filed on June 20, 2001 (Exhibit A). After almost one year, the undersigned attorney had not received a notice of missing parts, although no signed declaration had been included with the filing papers, nor an official filing receipt. After telephoning the customer service office of the Initial Patent Examination Division on May 29, 2001 to determine the status of the application, Applicants were notified that the above-referenced application was abandoned. No notice of abandonment has been

received. The clerk in the customer service office stated that the abandoned status was due to a failure to respond to a Notice to File Missing Parts, purportedly mailed by the USPTO in September 2001 (no specific date was given). Applicants respectfully aver that no such Notice to File Missing Parts was received or has yet been received, and therefore respectfully petition under 37 C.F.R. § 1.181(a) to withdraw the holding of abandonment.

To fulfill the showing required to establish nonreceipt of an Office communication to which a reply was required, Applicants herewith:

1. State that neither Applicants nor Applicants' agents received the Notice to File Missing Parts described by the clerk in the customer service office of the Initial Patent Examination Division, and attest that a search of the file jacket and docket records indicates that the Office communication was not received.

2. Provide a copy of the docket record where the nonreceived Office communication would have been entered, had it been received (Exhibit B). This docket report shows all actions due in the PTO and all actions completed by Applicant from date of filing to the date on the docket report (August 2, 2002). The docket report does not show either that a Notice of Missing Parts was received or completed, however, had a Notice of Missing Parts been received the due date would be listed in the docket report.

3. Provide executed formal documents, including declarations under 37 C.F.R. § 1.63, an assignment, a power of attorney, and a statement under 37 C.F.R. § 3.73(b), for filing in the above-referenced application (Exhibits C-F).

Should the petition to withdraw holding of abandonment not be granted, Applicants petition in the alternative to revive the above-referenced application under 37 C.F.R. § 1.137(b) as unintentionally abandoned for failure to timely respond to a Notice to File Missing Parts that was purportedly mailed in September 2001. Applicants request revival of the application and submit the required response in the form of executed formal documents. Applicants herewith:

1. Provide the required reply, namely, executed formal documents, including declarations under 37 C.F.R. § 1.63, an assignment, a power of attorney, and a statement under 37 C.F.R. § 3.73(b), for filing in the above-referenced application (Exhibits C-F).

2. Authorize deduction of the petition fee, pursuant to 37 C.F.R. § 1.17(m), in the amount of $1280.00 for a large entity, and authorize payment of the missing parts fee in the amount of $130.00 for a large entity pursuant to 37 C.F.R. § 1.16(e) from Deposit Account No. 20-1430 of the undersigned. The utility application filing fee and excess claims

fee were already been paid upon filing the application. If necessary, please also charge any required extension of time fee to Deposit Account No. 20-1430 of the undersigned.

3. State that the entire delay in filing the petition pursuant to 37 C.F.R. 1.137(b)(3), from the due date for the reply to the filing of a grantable petition, including the delay from the date of discovery of the abandonment of the application, was unintentional.

Please charge any additional fees or credit overpayment to the above deposit account. This petition is submitted in duplicate.

CONCLUSION

If a telephone conference would expedite consideration of this matter, the Examiner is invited to telephone the undersigned at (415) 576-0200.

Respectfully submitted,

Annette S. Parent

Annette S. Parent
Reg. No. 42,058

TOWNSEND and TOWNSEND and CREW LLP
(415) 576-0200 / Fax: (415) 576-0300
ASP/jlw

SF 1370585 v1

UNITED STATES PATENT AND TRADEMARK OFFICE

Commissioner for Patents
United States Patent and Trademark Office
P.O. Box 1450
Alexandria, VA 22313-1450
www.uspto.gov

PAUL & PAUL
2900 TWO THOUSAND MARKET ST.
PHILADELPHIA, PA 19103

COPY MAILED

SEP 09 2005

OFFICE OF PETITIONS

In re Application of :
Keiji Yoshizawa :
Application No. 09/886,354 : ON PETITION
Filed: June 21, 2001 :
Attorney Docket No. 152-01 :

This is a decision on the petition under 37 CFR 1.137(b), filed July 14, 2005, to revive the above-identified application.

The petition is **GRANTED.**

The above-identified application became abandoned for failure to submit the Issue fee and publication fee in a timely manner in reply to the Notice of Allowance mailed April 11, 2005, which set a statutory period for reply of three (3) months. Accordingly, the above-identified application became abandoned on July 12, 2005.

The petition satisfies the conditions for revival pursuant to the provisions of 37 CFR 1.137(b) in that (1) the reply in the form of payment of the issue fee; (2) the petition and publication fees; and (3) the required statement of unintentional delay have been received. Accordingly, the issue fee is accepted as having been unintentionally delayed.

Telephone inquiries concerning this decision should be directed to the undersigned at (571) 272-3210.

This matter is being referred to the Publishing Division for further processing.

Irvin Dingle
Petitions Examiner
Office of Petitions

UNITED STATES PATENT AND TRADEMARK OFFICE

COMMISSIONER FOR PATENTS
UNITED STATES PATENT AND TRADEMARK OFFICE
WASHINGTON, DC 20231
www.uspto.gov

Paper No. 9

MORRISON & FOERSTER LLP
3811 VALLEY CENTRE DRIVE
SUITE 500
SAN DIEGO CA 92130-2332

MAIL

AUG 28 2002

DIRECTOR OFFICE
TECHNOLOGY CENTER 2600

In re Application of :
Vasudevan et al. :
Application No. 09/886,398 :
Filed: June 20, 2001 :
For: SYSTEM AND METHOD FOR ADJUSTING BIT RATE AND COST OF DELIVERY OF DIGITAL DATA :

DECISION ON REQUEST TO WITHDRAW AS ATTORNEY

This is a decision on the request to withdraw as attorney/agent of record filed on June 18, 2002.

A grantable request to withdraw as attorney/agent of record must:
(1) indicate the present mailing address of the attorney(s)/agent(s) who seek(s) to withdraw, and
(2) be signed by each attorney/agent seeking to withdraw or clearly be signed on their behalf, and
(3) be *approved* at least thirty (30) days prior to the maximum extendable period for response to any outstanding Office Action, and
(4) indicate the address to which future correspondence should be mailed.

The request meets all of the requirements above. There is no outstanding Office Action to date.

The request is **GRANTED**.

All attorneys listed in the request have been withdrawn. It is noted, however, that Irina Britva is still of record.

All future communications from the Office will be directed to the address listed below until otherwise notified by applicant. Applicant is reminded of the obligation to promptly notify the Patent and Trademark Office of any change in correspondence address to ensure receipt of all communications from the Office.

Reinhard J. Eisenzopf
Special Program Examiner
Technology Center 2600
Communications
(703) 305-4711

cc: Gurminder Singh, Ph.D.
Chief Executive Officer & President
NewsTakes, Inc.
1633 Bayshore Highway, Suite 380
Burlingame, CA 94010

UNITED STATES PATENT AND TRADEMARK OFFICE

COMMISSIONER FOR PATENTS
UNITED STATES PATENT AND TRADEMARK OFFICE
P.O. BOX 1450
ALEXANDRIA, VA 22313-1450
www.uspto.gov

Paper No. 11

Gene Scott
Patent Law & Venture Group
Suite K-105
3151 Airway Avenue
Costa Mesa, CA 92626

OCT 17 2003

In re Application of	)	
Frank P. Forbath	)	
Application No. 09/886,415	)	DECISION ON REQUEST TO
Filed: June 20, 2001	)	WITHDRAW FROM RECORD
For: Attorney Docket No. Forbat. F-01	)	

This is a decision on the request to withdraw as attorney of record under 37 C.F.R. § 1.36, filed August 19, 2003.

A grantable request to withdraw as attorney of record should indicate thereon the present mailing addresses of the attorney(s) who is/are withdrawing from the record and of the applicant. The request for withdrawal must be signed by every attorney seeking to withdraw or contain a clear indication that one attorney is signing on behalf of another/others. A request to withdraw will not be approved unless at least 30 (thirty) days would remain between the date of approval and the later of the expiration date of a time to file a response or the expiration date of the maximum time period which can be extended under 37 C.F.R. § 1.136(a).

The request meets all the above listed requirements.

The request is APPROVED.

All future communications from the Office will be directed to the below-listed address until otherwise notified by applicant.

Jose G. Dees, Special Program Examiner
Technology Center 2800
Semiconductors, Electrical and Optical
Systems and Components

cc: Frank P. Forbath
2880 Club House Road
Costa Mesa, CA 92626

UNITED STATES PATENT AND TRADEMARK OFFICE

Commissioner for Patents
United States Patent and Trademark Office
P.O. Box 1450
Alexandria, VA 22313-1450
www.uspto.gov

HARRINGTON & SMITH, PC
4 RESEARCH DRIVE
SHELTON CT 06484-6212

COPY MAILED
MAY 2 3 2008
OFFICE OF PETITIONS

In re Application of
Scott
Application No. 09/886,419
Filed: June 21, 2001
Attorney Docket No. 857.0016.U1(US)

DECISION ON PETITION

This is a decision on the petition, filed January 14, 2008 (certificate of mailing date January 11, 2008), which is being treated as a petition under 37 CFR 1.181 (no fee) requesting withdrawal of the holding of abandonment in the above-identified application.

The petition is **GRANTED**.

This application was held abandoned for failure to reply to the final Office action mailed December 8, 2006, which set a three (3) month shortened statutory period for reply. A Notice of Abandonment was mailed on January 8, 2008.

Petitioner asserts that the Office action dated December 8, 2006 was not received.

A review of the written record indicates an irregularity in the mailing of the Office action – it was returned to the Office on December 12, 2006. In addition, applicant has provided a showing that the Office action was not in fact received. In this regard, the showing required to establish the failure to receive the Office action must consist of the following:

1. a statement from practitioner stating that the Office action was not received by the practitioner;

2. a statement from the practitioner attesting to the fact that a search of the file jacket and docket records indicates that the Office action was not received; and

3. a copy of the docket record where the nonreceived Office action would have been entered had it been received and docketed must be attached to and referenced in the practitioner's statement.

See MPEP § 711.03(c) under subheading "Petition to Withdraw Holding of Abandonment Based on Failure to Receive Office Action," and "Withdrawing the Holding of Abandonment When Office Actions Are Not Received," 1156 Official Gazette 53 (November 16, 1993).

The petition satisfies the above-stated requirements. Accordingly, the application was not abandoned in fact.

In view of the above, the Notice of Abandonment is hereby vacated and the holding of abandonment withdrawn.

This application is being referred to the Technology Center technical support staff of Art Unit 2174 for re-mailing the Office action of December 8, 2006. The period for reply will run from the mailing date of the Office action.

Shirene Willis Brantley

Shirene Willis Brantley
Senior Petitions Attorney
Office of Petitions

UNITED STATES PATENT AND TRADEMARK OFFICE

Commissioner for Patents
United States Patent and Trademark Office
P.O. Box 1450
Alexandria, VA 22313-1450
www.uspto.gov

ALVIN JOSEPH RIDDLES
CANDLEWOOD ISLE
BOX 34
NEW FAIRFIELD, CT 06812

COPY MAILED

JUL 1 3 2004

OFFICE OF PETITIONS

In re Application of	:	
Cohen et al.	:	
Application No. 09/886,437	:	ON PETITION
Filed: June 21, 2001	:	
Attorney Docket No. YOR920000772US1	:	

This is a decision on the petition under 37 C.F.R. § 1.137(b), filed March 31, 2004, to revive the above-identified application.

The petition is **DISMISSED**.

Any request for reconsideration must be submitted within TWO (2) MONTHS from the mail date of this decision. No further petition fee is required for the request. Extensions of time under 37 CFR 1.136(a) are permitted. The reconsideration request should include a cover letter entitled "Renewed Petition under 37 CFR 1.137(b)." This is **not** a final agency action within the meaning of 5 U.S.C. § 704.

The above-identified application became abandoned as a result of petitioner's failure to file an appeal brief (and fee required by 37 CFR 1.17(c)) within the time period provided in 37 CFR 1.192(a). As an appeal brief (and appeal brief fee) was not filed within two (2) months of the Notice of Appeal filed November 28, 2003, and no extensions of time under the provisions of 37 CFR 1.136(b) were obtained, the appeal was dismissed and the proceedings as to the rejected claims were terminated. See 37 CFR 1.192(b) & 1.197(c). As no claim was allowed, the-above-identified application became abandoned on January 29, 2004. See MPEP 1215.04.

A grantable petition under 37 CFR 1.137(b) must be accompanied by:
(1) the required reply,[1]
(2) the petition fee,
(3) a statement that the entire delay in filing the required reply from the due date for the reply until the filing of a grantable petition pursuant to 37 CFR 1.137(b) was unintentional, and
(4) a terminal disclaimer and fee if the application was filed on or before June 8, 1995 or if the application is a design application.

[1] In a nonprovisional application abandoned for failure to prosecute, the required reply may be met by the filing of a continuing application. In an application or patent, abandoned or lapsed for failure to pay the issue fee or any portion thereof, the required reply must be the payment of the issue fee or any outstanding balance thereof.

Where there is a question as to whether either the abandonment or the delay in filing a petition under 37 CFR 1.137 was unintentional, the Commissioner may require additional information.[2]

The instant petition lacks item (1). The Amendment submitted to the Examiner on March 31, 2004 failed to place the above-identified application in condition for allowance. A proper reply to a final rejection under 37 CFR 1.113 may be: (1) an amendment, which places the application in condition for allowance; (2) a Notice of Appeal (with appeal fee); or (3) a Request for Continued Examination (RCE) in compliance with 37 CFR 1.114. Petitioner must submit one of the above documents in order to revive the above-identified application. The Advisory Action issued by the Examiner is enclosed.

Further correspondence with respect to this matter should be addressed as follows:

By mail: Mail Stop PETITION
Commissioner for Patents
Post Office Box 1450
Alexandria, VA 22313-1450

Effective December 1, 2003, the Office of Petitions can no longer receive hand-carried correspondence, or facsimile transmissions of correspondence. The centralized location for hand-carried correspondence is the existing Customer Window located at:

2011 South Clark Place
Crystal Plaza 1 Lobby
Room 1B03
Arlington, VA 22202

The centralized facsimile number is **(703) 872-9306.**

Telephone inquiries should be directed to the undersigned at (703) 306-0482.

Liana Chase

Liana Chase
Petitions Examiner
Office of Petitions
Office of the Deputy Commissioner
for Patent Examination Policy

Enclosure: Advisory Action

---

[2] See MPEP 711.03(c)(III)(C) and (D).

UNITED STATES PATENT AND TRADEMARK OFFICE

Commissioner for Patents
United States Patent and Trademark Office
P.O. Box 1450
Alexandria, VA 22313-1450
www.uspto.gov

HEWLETT-PACKARD COMPANY
Intellectual Property Administration
P.O. Box 272400
Fort Collins CO 80527-2400

COPY MAILED
SEP 0 8 2006
OFFICE OF PETITIONS

In re Application of :
Gardner et al. :
Application No. 09/886,444 : ON PETITION
Filed: June 21, 2001 :
Title: Automated Imaging with Phosphorescent :
Imaging Targets

This is a decision on the petition under 37 CFR §1.137(a) to revive the patent application filed August 10, 2004, September 6, 2005 and June 27, 2006. This petition is properly treated as a petition to withdraw the holding of abandonment.

The petition filed under 37 CFR 1.137(a) is **Dismissed as Moot**.

The petition to withdraw the holding of abandonment is **GRANTED**.

This application became abandoned for failure to timely submit a response to the final Office Action mailed November 24, 2003. The Notice set an extendable 3 month period for reply. No extensions of time pursuant to 37 CFR 1.136(a) were obtained. Accordingly, this application was held abandoned on February 25, 2005. A Notice of Abandonment was mailed on June 30, 2004.

Petitioner asserts that the final Office Action mailed on November 24, 2003 was never received. Petitioner attest that the Office Action was never received. Petitioner states a search of the file jacket and docket records confirms the Office Action was not received. In support of petitioner's contention, a copy of applicant's records have been provided.

This application is being forwarded to Art Unit 2877 for re-mailing of the Office Action. The three month extendable time period for reply will be set to run from the mailing date of the Office Action.

Telephone inquiries concerning this matter should be directed to the undersigned at (571) 272-3215.

Charlema R. Grant

Charlema R. Grant
Petitions Attorney
Office of Petitions

UNITED STATES PATENT AND TRADEMARK OFFICE

COMMISSIONER FOR PATENTS
UNITED STATES PATENT AND TRADEMARK OFFICE
WASHINGTON, D.C. 20231
www.uspto.gov

Paper No. 5

Amir H. Raubvogel
FENWICK & WEST LLP
Two Palo Alto Square
Palo Alto, CA 94306

MAILED

MAY 3 1 2002

Technology Center 2100

In re Application of	)	
Bruce E. BROWN et al	)	
Application No. 09/886,478	)	**DECISION ON REQUEST FOR**
Filed: June 20, 2001	)	**WITHDRAWAL AS ATTORNEY**
For: VARIABLE TRUST LEVELS FOR	)	
AUTHENTICATION	)	

This is a decision on the Request To Withdraw from Representation filed January 08, 2002.

A grantable request to withdraw as attorney of record should indicate thereon the present mailing addresses of the attorney(s) who is/are withdrawing from the record and of the applicant. The request for withdrawal must be signed by every attorney seeking to withdraw or contain a clear indication that one attorney is signing on behalf of another/others. A request to withdraw will not be approved unless at least 30 (thirty) days would remain between the date of approval and the later of the expiration date of a time to file a response or the expiration date of the maximum time period which can be extended under 37 C.F.R. § 1. 136(a). The effective date of withdrawal being the date of decision and not the date of request. See M.P.E.P. § 402.06. 37 C.F.R. § 1.36 further requires that the applicant or patent owner be notified of the withdrawal of the attorney or agent.

The request is **GRANTED**.

All future communications from the Office will be directed to the below-listed address until otherwise notified by applicant. This correspondence address is provided by the withdrawn attorney(s). Applicant is reminded of the obligation to promptly notify the Patent and Trademark Office (Office) of any change in correspondence address to ensure receipt of all communications from the Office.

Vincent N. Trans
Special Programs Examiner
Technology Center 2100
Computer Architecture, Software, and
Electronic Commerce
(703) 305-9750

cc: Phil Hampton
GARDNER, CARTON & DOUGLAS
1301 K Street, NW
East Tower, Suite 900
Washington, DC 20005-3317

UNITED STATES PATENT AND TRADEMARK OFFICE

Commissioner for Patents
United States Patent and Trademark Office
P.O. Box 1450
Alexandria, VA 22313-1450
www.uspto.gov

GATEWAY, INC.
ATTN: Patent Attorney
610 GATEWAY DRIVE
MAIL DROP Y-04
N. SIOUX CITY SD 57049

COPY MAILED
MAY 2 3 2006
OFFICE OF PETITIONS

In re Application of:	:	
RAPAICH, Mark, et al.	:	DECISION ON PETITION UNDER
Application No.: 09/886,481	:	37 CFR 1.137(b)
Filed: June 21, 2001	:	
Atty's Docket No.: 450.309US2	:	

This is a decision on the petition for revival of the above-entitled application under 37 CFR 1.137(b), filed February 08, 2006.

The petition is **GRANTED**.

The above-identified application became abandoned for failure to submit the issue fee in a timely manner in reply to the Notice Of Allowance mailed May 19, 2005, which set a statutory period for reply of three (3) months. Accordingly, the above-identified application became abandoned at midnight on August 19, 2005.

On February 08, 2006, applicant filed the petition for revival under 37 CFR 1.137(b) considered herein. The petition satisfies the conditions for revival pursuant to the provisions of 37 CFR 1.137(b) in that it includes: (1) the petition fee; (2) the required statement of unintentional delay; and (3) the required reply in the form of payment of the issue fee. Accordingly, the issue fee payment is accepted as having been unintentionally delayed.

The application is being referred to the Office Of Publications.

Telephone inquiries concerning this decision should be directed to the undersigned at (571) 272-3296.

Richard M. Ross
Attorney Advisor

UNITED STATES PATENT AND TRADEMARK OFFICE

Commissioner for Patents
United States Patent and Trademark Office
P.O. Box 1450
Alexandria, VA 22313-1450
www.uspto.gov

BAKER & BOTTS
30 ROCKEFELLER PLAZA
44TH FLOOR
NEW YORK NY 10112

COPY MAILED

SEP 01 2006

OFFICE OF PETITIONS

In re Application of	:	
Hogan, et al.	:	
Application No. 09/886,486	:	ON PETITION
Filed: June 22, 2001	:	
Attorney Docket No. AP33454-070457.1023	:	

This is a decision on the petition filed on February 13, 2006, pursuant to 37 CFR 1.137(b), to revive the above-identified application.

The petition is **GRANTED**.

The above-identified application became abandoned for failure to timely file a proper reply to the final Office action mailed on May 10, 2005. Applicants filed an Amendment on November 14, 2005, made timely by obtaining a three month extension of time and including a Certificate of Mailing dated November 10, 2005. However, on December 6, 2005, the Office mailed an Advisory Action, informing Applicants that the Amendment would not be entered because it failed to place the application in condition for allowance. Accordingly, the application became abandoned on November 11, 2005. A Notice of Abandonment was mailed on February 1, 2006.

With the instant petition, applicant paid the petition fee, submitted the required reply in the form of an RCE, and made the proper statement of unintentional delay.

The matter is being forwarded to Group Art Unit 3621 for consideration of the RCE, filed February 13, 2006.

Telephone inquiries concerning this decision should be directed to the undersigned at (571)272-3207.

Cliff Congo
Petitions Attorney
Office of Petitions

UNITED STATES PATENT AND TRADEMARK OFFICE

COMMISSIONER FOR PATENTS
UNITED STATES PATENT AND TRADEMARK OFFICE
P.O. BOX 1450
ALEXANDRIA, VA 22313-1450
www.uspto.gov

Paper No. 6

THE BOEING COMPANY
P. O. BOX 3707 M/C 13-08
SEATTLE, WA 98124-2207

COPY MAILED

JUN 05 2003

OFFICE OF PETITIONS
ON PETITION

In re Application of :
Karen L. Coates, et al. :
Application No. 09/886,511 :
Filed: June 21, 2001 :
Attorney Docket No. 99-315A :

This is a decision on the petition under 37 CFR 1.137(b), filed May 27, 2003, to revive the above-identified application.

The petition is **DISMISSED.**

Any request for reconsideration of this decision must be submitted within TWO (2) MONTHS from the mail date of this decision. Extensions of time under 37 CFR 1.136(a) are permitted. The reconsideration request should include a cover letter entitled "**Renewed Petition under 37 CFR 1.137(b)**." This is **not** final agency action within the meaning of 5 U.S.C. § 704.

A grantable petition under 37 CFR 1.137(b) must be accompanied by: (1) the required reply, unless previously filed; (2) the petition fee as set forth in 37 CFR 1.17(m); (3) a statement that the entire delay in filing the required reply from the due date for the reply until the filing of a grantable petition pursuant to 37 CFR 1.137(b) was unintentional; and (4) any terminal disclaimer (and fee as set forth in 37 CFR 1.20(d)) required by 37 CFR 1.137(c). Where there is a question as to whether either the abandonment or the delay in filing a petition under 37 CFR 1.137 was unintentional, the Commissioner may require additional information. See MPEP 711.03(c)(III)(C) and (D). The instant petition lack(s) item(s) one (1).

A petition to revive cannot be granted where there is an outstanding requirement. In the instant case, there was no response to the outstanding office action mailed on October 16, 2002. Petitioner asserts that he never received the Office action and in a May 5, 2003 conversation with the examiner, petitioner said that he requested a copy of the Office action but has not received a copy. Petitioner must submit a proper response upon the filing of a renewed petition. Until a proposed response is received, this application cannot be revived. A copy of the Office Action has been enclosed as requested.

Further correspondence with respect to this matter should be addressed as follows:

By mail: Mail Stop PETITION
Commissioner for Patents

Post Office Box 1450
Alexandria, VA 22313-1450

By hand: Crystal Plaza 4, Suite 3C23
2201 South Clark Place
Arlington, VA 22202

By facsimile: (703) 308-6916
ATTN: Office of Petitions

Telephone inquiries concerning this decision should be directed to the undersigned at (703) 306-5594.

Retta Williams

Retta Williams
Petitions Examiner
Office of Petitions
Office of the Deputy Commissioner
for Patent Examination Policy

Attachment: Office Action

UNITED STATES PATENT AND TRADEMARK OFFICE

COMMISSIONER FOR PATENTS
UNITED STATES PATENT AND TRADEMARK OFFICE
P.O. BOX 1450
ALEXANDRIA, VA 22313-1450
www.uspto.gov

Paper No. 6

THE BOEING COMPANY
P. O. BOX 3707 M/C 13-08
SEATTLE, WA 98124-2207

COPY MAILED

JUL 2 9 2003

OFFICE OF PETITIONS

In re Application of :
Karen L. Coates, et al. :
Application No. 09/886,511 :
Filed: June 21, 2001 :
Attorney Docket No. 99-315A :

ON PETITION

This is a decision on the renewed petition under 37 CFR 1.137(b), filed July 21, 2003, to revive the above-identified application.

The petition is **GRANTED.**

The above-identified application became abandoned for failure to reply in a timely manner to the non-final Office action mailed October 16, 2002, which set a shortened statutory period for reply of three (3) months. No extensions of time under the provisions of 37 CFR 1.136(a) were obtained. Accordingly, the application became abandoned on January 17, 2003.

A review of the record indicates that the Petition fee was inadvertently charged twice. Accordingly, the $1300 for the petition fee charged on July 23, 2003 will be credited to petitioner's deposit account number 02-2960.

Telephone inquiries concerning this decision should be directed to the undersigned at (703) 306-5594.

The application file is being forwarded to Technology Center 1700, Art Unit 1753 for further processing.

Retta Williams

Retta Williams
Petitions Examiner
Office of Petitions
Office of the Deputy Commissioner
for Patent Examination Policy

UNITED STATES PATENT AND TRADEMARK OFFICE

Commissioner for Patents
United States Patent and Trademark Office
P.O. Box 1450
Alexandria, VA 22313-1450
www.uspto.gov

BLAKELY SOKOLOFF TAYLOR & ZAFMAN
12400 WILSHIRE BOULEVARD
SEVENTH FLOOR
LOS ANGELES CA 90025-1030

COPY MAILED

JUL 29 2005

OFFICE OF PETITIONS

In re Application of
Charles A. Miller and Benjamin N. Eldridge
Application No. 09/886,521
Filed: 20 June 2001
Attorney Docket No. 3401P097

: DECISION GRANTING PETITION
: UNDER 37 CFR 137(b)

This is a decision on the petition under 37 CFR 1.137(b), filed 9 May 2005, to revive the above-identified application. The instant application became abandoned for failure to reply to the official action mailed 18 May 2004.

The petition is **GRANTED**.

37 CFR 1.137(b)(3) requires a statement that the entire delay in filing the required reply from the due date for the reply until the filing of a grantable petition pursuant to 37 CFR 1.137(b) was unintentional.

The petition satisfies the conditions for revival pursuant to the provisions of 37 CFR 1.137(b) in that (1) the reply in the form of an Amendment and a Request for Continued Examination (RCE); (2) the petition fee; and (3) the required statement of unintentional delay have been received. Accordingly, the reply to the final Office action of 18 May 2004 is accepted as having been unintentionally delayed.

Pursuant to 37 CFR 1.136, an extension of time must be filed prior to the expiration of the maximum period obtainable for reply to avoid abandonment. Accordingly, since the $1020 extension of time submitted with the petition on 9 May 2005 was subsequent to the maximum period obtainable for reply, this fee is unnecessary and will be credited to petitioner's deposit account.

The file does not indicate a change of address has been submitted, although the address given on the petition differs from the address of record. If appropriate, a change of address should be filed in accordance with MPEP 601.03. A courtesy copy of this decision is being mailed to the address given on the petition; however, the Office will mail all future correspondence solely to the address of record.

The application file is being referred to Technology Center Art Unit 2833 for appropriate action on the concurrently filed response.

Any questions concerning this matter may be directed to Erik Kielin at (571) 272-6051, or in his absence, the undersigned at (571) 272-3217.

Karen Creasy for

Brian Hearn
Petitions Examiner
Office of Petitions
Office of the Deputy Commissioner
for Patent Examination Policy

cc:
STUART L. MERKADEAU
FORMFACTOR, INC.
7005 SOUTHFRONT ROAD
LIVEMORE, CA 94551

UNITED STATES PATENT AND TRADEMARK OFFICE

Commissioner for Patents
United States Patent and Trademark Office
P.O. Box 1450
Alexandria, VA 22313-1450
www.uspto.gov

JJGJr: 07-06

Paper No: __

LATHROP & GAGE LC
4845 PEARL EAST CIRCLE
SUITE 300
BOULDER CO 80301

COPY MAILED

JUL 17 2006

OFFICE OF PETITIONS

In re Application of	:	
Vock, et al.	:	
Application No. 09/886,578	:	NOTICE
Filed: 21 June, 2001	:	
Attorney Docket No. 393216	:	
Patent No. 6,498,994	:	
Issue Date: 24 December, 2002	:	

This is a notice regarding the notification to the Office that the patent holder no longer claims small entity status filed on 15 March, 2006.

In this case the Office does not acknowledge a request for acceptance of a fee deficiency submission (properly considered under 37 C.F.R. §1.28) because no such request was made at the filing noted above.

It remains Petitioner's responsibility to ensure that the proper fees are timely offered and accepted.

NOTE: Petitioner is reminded and placed on Notice that the Rules of Practice mandate that Petitioner provide both the application and patent numbers, as well as filing and issue dates, in all matters regarding this patent.[1]

[1] See: 37 C.F.R. §1.366 and MPEP §2515.

On September 1, 1998, the Court of Appeals for the Federal Circuit held that 37 C.F.R. §1.28(c) is the sole provision governing the time for correction of the erroneous payment of the issue fee as a small entity. See DH Technology v. Synergystex International, Inc. 154 F.3d 1333, 47 USPQ2d 1865 (Fed. Cir. Sept. 1, 1998).

The Office no longer investigates or rejects original or reissue applications under 37 C.F.R. §1.56. 1098 Off. Gaz. Pat. Office 502 (January 3, 1989). Therefore, nothing in this notice is intended to imply that an investigation was done.

This file is released to image file wrapper (IFW) storage.

Inquiries regarding this application should be directed to the Technology Center. The general phone number for the Office of Petitions which should be used for status requests is (571) 272-3282.

John J. Gillon, Jr.
Senior Attorney
Office of Petitions

UNITED STATES PATENT AND TRADEMARK OFFICE

SEP 14 2004

UNDER SECRETARY OF COMMERCE FOR INTELLECTUAL PROPERTY AND
DIRECTOR OF THE UNITED STATES PATENT AND TRADEMARK OFFICE
WASHINGTON, DC 20231
www.uspto.gov

MAILED

SEP 14 2004

OFFICE OF THE DIRECTOR
TC 3600

Swindler Berlin Shereff Friedman, LLP
3000 K Street, NW
Box IP
Washington, DC 20007

In re application of
Benjamine Kane
Application No. 09/886,613
Filed: June 22, 2001
For: SYSTEM AND METHOD FOR PRODUCING, PUBLISHING, MANAGING, AND INTER-ACTING WITH E-CONTENT ON MULTIPLE PLATFORMS

: DECISION ON REQUEST
: FOR WITHDRAWAL OF
: ATTORNEY

This is a decision on the request filed on January 17, 2002, under 37 CFR 1.36 and MPEP 402.06, requesting permission to withdraw as the attorney of record in the above-identified application.

The request is **NOT APPROVED**.

Under 37 CFR 1.36 an attorney may withdraw only upon application to and approval by the Commissioner. It should be noted that a withdrawal is effective when approved, not when filed. Besides giving due notice to his or her client and delivering to the client all papers and property to which the client is entitled as specified under 37 CFR 10.40, approval of such a request requires that the following conditions be met:

A) Each attorney of record must sign the notice of withdrawal, or the notice must contain a clear indication of one attorney signing on behalf of another, because the Office does not recognize law firms;

B) A proper reason for the withdrawal as enumerated in 37 CFR 10.40(b) or subsection (1)-(6) of 37 CFR 10.40(c) must be provided; and

C) If withdrawal is requested in accordance with 37 CFR 10.40(c) above, there must be at least 30 days between approval of the withdrawal and the later of the expiration date of a time period for reply or the expiration date of the period which can be obtained by a petition and fee for extension of time under 37 CFR 1.136(a).

The request to withdraw as attorney in the above-identified application is not approved because the attorney signing the request does not have power of attorney in this application.

Kenneth J. Dorner
Special Programs Examiner
Patent Technology Center 3600
(703) 308-0866
Facsimile No.: (703) 605-0586

KJD/slb: 09/09/04

Please type a plus sign (+) inside this box → [+]

PTO/SB/83 (08-00)
Approved for use through 10/31/2002. OMB 0651-0035
U S Patent and Trademark Office; U.S. DEPARTMENT OF COMMERCE
Under the Paperwork Reduction Act of 1995, no persons are required to respond to a collection of information unless it displays a valid OMB control number

REQUEST FOR WITHDRAWAL AS ATTORNEY OR AGENT

Application Number	09/886,613 09/886,613
Filing Date	June 22, 2001
First Named Inventor	Benjamin Kane
Group Art Unit	3625
Examiner Name	R. Rhoade
Attorney Docket Number	19693.0002

To: Assistant Commissioner for Patents
Washington, DC 20231

I hereby apply to withdraw as attorney or agent for the above identified application.

The reasons for this request are: Failure of applicant to communicate with or provide payments to the undersigned

APPROVED FEB 13 2006

1. ☐ The correspondence address is NOT affected by this withdrawal.
2. ☒ Change the correspondence address and direct all future correspondence to:

CORRESPONDENCE ADDRESS

☐ Customer Number → Place Customer Number Bar Code Label here
OR

☒ Firm or Individual Name	Mr. Robert Krause, Globecom Interactive				
Address	12310 Pinecrest Road				
Address	Suite 200				
City	Reston	State	VA	ZIP	20191
Country	USA				
Telephone	(703) 621-4500 Ext. 131	Fax	(703) 621-4477		

This request is enclosed in triplicate.

Name	John P. Moran
Signature	John P. Moran
Date	7-1-04

NOTE: Withdrawal is effective when approved rather than when received
Unless there are at least 30 days between approval of withdrawal and the expiration date of a time period for response or possible extension period, the request to withdraw is normally disapproved.

Burden Hour Statement This form is estimated to take 0.2 hours to complete. Time will vary depending upon the needs of the individual case. Any comments on the amount of time you are required to complete this form should be sent to the Chief Information Officer, U S Patent and Trademark Office, Washington, DC 20231 DO NOT SEND FEES OR COMPLETED FORMS TO THIS ADDRESS. SEND TO: Assistant Commissioner for Patents, Washington, DC 20231

UNITED STATES PATENT AND TRADEMARK OFFICE

COMMISSIONER FOR PATENTS
UNITED STATES PATENT AND TRADEMARK OFFICE
WASHINGTON, D.C. 20231
www.uspto.gov

Paper No. 6

SWIDLER BERLIN SHEREFF FRIEDMAN, LLP
3000 K STREET, NW
BOX IP
WASHINGTON DC 20007

COPY MAILED

MAY 2 0 2002

OFFICE OF PETITIONS

In re Application of
Flesner, Chaston, Anuff, Moses, MacLeod, Leiser, Muoto
Ladygo, Slesinsky, and Joyce
Application No. 09/886,614
Filed: June 22, 2001
Attorney Docket No. 19312.0015
For: PORTAL SERVER THAT PROVIDES MODIFICATION OF USER INTERFACES FOR ACCESS TO COMPUTER NETWORKS

DECISION REFUSING STATUS UNDER 37 CFR 1.47(b)

This is a decision on the petition under 37 CFR 1.47(a), filed February 21, 2002.

The petition under 37 CFR 1.47(a) is **dismissed.**

Any request for reconsideration under this decision must be submitted within TWO (2) MONTHS from the mail date of this decision. Extensions of time under 37 CFR 1.136(a) are permitted. Failure to respond will result in the abandonment of this application. Any response should be titled "Request for Reconsideration of Petition Under 37 CFR 1.47(a).

The above-identified application was filed on February 21, 2002, without an executed oath or declaration. Accordingly, a "Notice to File Missing Parts of Application" was mailed on August 21, 2001, requiring an executed oath or declaration, filing and claim fees, and a surcharge for the late filing of the oath or declaration.

On February 21, 2002, petitioner filed the instant petition and obtained a four (4) month extension of time to file a reply. In support of the petition, petitioner filed a "Combined Declaration and Power of Attorney" and the affidavit of Mr. Paul Loomis.

A grantable petition under 37 CFR 1.47(a) requires:

(1) proof that the non-signing inventor(s) cannot be reached or refuses to sign the oath or declaration after having been presented with the application papers (specification, claims, and drawings);

(2) an acceptable oath or declaration in compliance with 35 U.S.C. §§ 115 and 116;

(3) the petition fee,

(4) a statement of the last known address of the non-signing inventor,

The instant petition lacks item (1) as set forth above.

As to item (1), petitioner did not provide adequate documentation that diligent efforts were made to locate the non-signing inventors. A standard of what will suffice as "adequate documentation" is found in *Manuel of Patent Examining Procedure*, Section 409.03(d) and provides, in pertinent part, as follows:

> Where inability to find or reach a non-signing inventor "after diligent effort" is the reason for filing under 37 CFR 1.47, an affidavit or declaration of facts should be submitted that fully describes the exact facts which are relied on to establish that a diligent effort was made. . . The affidavit or declaration of facts must be signed, where at all possible, by a person having firsthand knowledge of the facts recited therein. Statements based on hearsay will not normally be accepted. Copies of documentary evidence such as certified mail return receipt, cover letter of instructions, telegrams, etc. that support a finding that the non-signing inventor could not be found or reached should be part of the affidavit or declaration. It is important that affidavit or declaration contain statements of facts as opposed to conclusions.

Petitioner did not provide sufficient evidence of petitioner's, or other interested parties, efforts to locate the non-signing inventors. Petitioner only indicates that an inquiry was made to the Human Resources department of what is presumed to be the last known employer for the nonsigning inventors as to the addresses for the nonsigning inventors. Using the address provided by the empoyer, petitioner sent correspondence to the nonsigning inventors relative to the prosecution of the subject application. There is no evidence, however, that the address provided by the employer was accurate or that petitioner made any other effort to attempt to confirm delivery of the application papers to the nonsigning inventor, i.e., use of certified mail. Though petitioner did provide a copy of the FEDEX Airbill of the package sent to the nonsigning inventor, the airbill does not provide any evidence that the package was received by the nonsigning inventor. Sufficient evidence has not been provided to substantiate a claim that a "diligent effort" was made to present the nonsigning inventors with the application papers. Accordingly, petitioner has failed to satisfy item (1) above.

Also as to item (1) above, petitioner has not demonstrated that a complete copy of the application papers was presented to the nonsigning inventors. From the copies of the cover letters sent to the nonsigning inventors, it appears that only the declaration and an assignment were sent to the nonsigning inventors. In order to be considered grantable, a petition under 37 CFR 1.47(a) requires that a complete copy of the application papers, including the specification, abstract, claims, and drawings, be presented to the nonsigning inventors. Sufficient proof was not provided to establish that this was done, therefore; item (1) above has not been satisfied.

It is noted that petition fee of $130.00 was charged twice, therefore; $130.00 will be credited to deposit account 19-5127, in due course.

Further correspondence with respect to this matter should be addressed as follows:

By mail: Commissioner for Patents
Box DAC
Washington, DC 20231

By FAX: (703) 308-6919
Attn: Office of Petitions

By hand: Crystal Plaza Four, Suite 3C23
2201 South Clark Place
Arlington, Virginia

Telephone inquiries should be directed to Kenya A. McLaughlin, Petitions Attorney, at (703) 305-0010.

Beverly M. Flanagan
Supervisory Petitions Examiner
Office of Petitions
Office of the Deputy Commissioner
for Patent Examination Policy

UNITED STATES PATENT AND TRADEMARK OFFICE

COMMISSIONER FOR PATENTS
UNITED STATES PATENT AND TRADEMARK OFFICE
WASHINGTON, D.C. 20231
www.uspto.gov

MAY 24 2002

Paper No. 6

SWIDLER BERLIN SHEREFF FRIEDMAN, LLP
3000 K STREET, NW
BOX IP
WASHINGTON DC 20007

COPY MAILED

MAY 20 2002

OFFICE OF PETITIONS

In re Application of
Flesner, Chaston, Anuff, Moses, MacLeod, Leiser, Muoto
Ladygo, Slesinsky, and Joyce
Application No. 09/886,614
Filed: June 22, 2001
Attorney Docket No. 19312.0015
For: PORTAL SERVER THAT PROVIDES MODIFICATION OF USER INTERFACES FOR ACCESS TO COMPUTER NETWORKS

DECISION REFUSING STATUS
UNDER 37 CFR 1.47(b)

RECEIVED

JUL 24 2002

OFFICE OF PETITIONS

This is a decision on the petition under 37 CFR 1.47(a), filed February 21, 2002.

The petition under 37 CFR 1.47(a) is **dismissed.**

Any request for reconsideration under this decision must be submitted within TWO (2) MONTHS from the mail date of this decision. Extensions of time under 37 CFR 1.136(a) are permitted. Failure to respond will result in the abandonment of this application. Any response should be titled "Request for Reconsideration of Petition Under 37 CFR 1.47(a).

The above-identified application was filed on February 21, 2002, without an executed oath or declaration. Accordingly, a "Notice to File Missing Parts of Application" was mailed on August 21, 2001, requiring an executed oath or declaration, filing and claim fees, and a surcharge for the late filing of the oath or declaration.

On February 21, 2002, petitioner filed the instant petition and obtained a four (4) month extension of time to file a reply. In support of the petition, petitioner filed a "Combined Declaration and Power of Attorney" and the affidavit of Mr. Paul Loomis.

A grantable petition under 37 CFR 1.47(a) requires:

(1) proof that the non-signing inventor(s) cannot be reached or refuses to sign the oath or declaration after having been presented with the application papers (specification, claims, and drawings);

(2) an acceptable oath or declaration in compliance with 35 U.S.C. §§ 115 and 116;

(3) the petition fee,

(4) a statement of the last known address of the non-signing inventor,

The instant petition lacks item (1) as set forth above.

As to item (1), petitioner did not provide adequate documentation that diligent efforts were made to locate the non-signing inventors. A standard of what will suffice as "adequate documentation" is found in *Manuel of Patent Examining Procedure*, Section 409.03(d) and provides, in pertinent part, as follows:

DOCKETED gdc 5.28.02

Request Reconsideration
7.20.02

> Where inability to find or reach a non-signing inventor "after diligent effort" is the reason for filing under 37 CFR 1.47, an affidavit or declaration of facts should be submitted that fully describes the exact facts which are relied on to establish that a diligent effort was made. . . The affidavit or declaration of facts must be signed, where at all possible, by a person having firsthand knowledge of the facts recited therein. Statements based on hearsay will not normally be accepted. Copies of documentary evidence such as certified mail return receipt, cover letter of instructions, telegrams, etc. that support a finding that the non-signing inventor could not be found or reached should be part of the affidavit or declaration. It is important that affidavit or declaration contain statements of facts as opposed to conclusions.

Petitioner did not provide sufficient evidence of petitioner's, or other interested parties, efforts to locate the non-signing inventors. Petitioner only indicates that an inquiry was made to the Human Resources department of what is presumed to be the last known employer for the nonsigning inventors as to the addresses for the nonsigning inventors. Using the address provided by the empoyer, petitioner sent correspondence to the nonsigning inventors relative to the prosecution of the subject application. There is no evidence, however, that the address provided by the employer was accurate or that petitioner made any other effort to attempt to confirm delivery of the application papers to the nonsigning inventor, i.e., use of certified mail. Though petitioner did provide a copy of the FEDEX Airbill of the package sent to the nonsigning inventor, the airbill does not provide any evidence that the package was received by the nonsigning inventor. Sufficient evidence has not been provided to substantiate a claim that a "diligent effort" was made to present the nonsigning inventors with the application papers. Accordingly, petitioner has failed to satisfy item (1) above.

Also as to item (1) above, petitioner has not demonstrated that a complete copy of the application papers was presented to the nonsigning inventors. From the copies of the cover letters sent to the nonsigning inventors, it appears that only the declaration and an assignment were sent to the nonsigning inventors. In order to be considered grantable, a petition under 37 CFR 1.47(a) requires that a complete copy of the application papers, including the specification, abstract, claims, and drawings, be presented to the nonsigning inventors. Sufficient proof was not provided to establish that this was done, therefore; item (1) above has not been satisfied.

It is noted that petition fee of $130.00 was charged twice, therefore; $130.00 will be credited to deposit account 19-5127, in due course.

Further correspondence with respect to this matter should be addressed as follows:

By mail: Commissioner for Patents
Box DAC
Washington, DC 20231

By FAX: (703) 308-6919
Attn: Office of Petitions

By hand: Crystal Plaza Four, Suite 3C23
2201 South Clark Place
Arlington, Virginia

Telephone inquiries should be directed to Kenya A. McLaughlin, Petitions Attorney, at (703) 305-0010.

Beverly M. Flanagan
Supervisory Petitions Examiner
Office of Petitions
Office of the Deputy Commissioner
for Patent Examination Policy

UNITED STATES PATENT AND TRADEMARK OFFICE

COMMISSIONER FOR PATENTS
UNITED STATES PATENT AND TRADEMARK OFFICE
WASHINGTON, D.C. 20231
www.uspto.gov

OIPE JC98
AUG 0 6 2002
PATENT & TRADEMARK OFFICE

Paper No. 9

SWIDLER BERLIN SHEREFF FRIEDMAN, LLP
3000 K STREET, NW
BOX IP
WASHINGTON DC 20007

COPY MAILED

JUL 3 0 2002

OFFICE OF PETITIONS

In re Application of
Flesner, Chaston, Anuff, Moses, MacLeod,
Leiser, Muoto, Ladygo, Slesinsky, and Joyce
Application No.:09/886,614
Filed: June 22, 2001
Attorney Docket No: 19312.0015
For: PORTAL SERVER THAT PROVIDES MODIFICATION OF USER INTERFACES FOR ACCESS TO COMPUTER NETWORKS

ON RENEWED PETITION

AUG - 2 2002

This is in response to the renewed petition under 37 CFR 1.47(a), filed June 22, 2002.

The petition is GRANTED.

The initial petition under 37 CFR 1.47(a) was filed on February 21, 2002, in response to a "Notice to File Missing Parts of Non-Provisional Application" (the "Notice") which indicated that a proper oath or declaration had not been filed and that a surcharge for either a late filing fee or oath or declaration was due and owing. A decision dismissing the petition of February 21, 2002, was mailed on May 20, 2002. The decision indicated that petitioner did not provided adequate documentation to substantiate petitioner's diligent effort to locate the non-signing inventors, nor did petitioner provide sufficient proof that the entire application was presented to the non-signing inventors as is required. . The decision also advised petitioner of the two-month period for reply beginning from the mailing date of the decision and that extension of time for reply were available pursuant to 37 CFR 1.136(a). On June 22, 2002, petitioner filed a renewed petition. Petitioner also filed a declaration executed by all the named inventors, except inventor Ladygo.

Petitioner has established that, despite petitioner's diligent efforts, petitioner was unable to locate inventor Ladygo. As provided in Rule 1.47(c), this Office will forward notice of this application's filing to the non-signing inventor at the address given in the petition. Notice of the filing of this application will also be published in the Official Gazette.

DOCKETED gdc 8.2.02

This application will be forwarded to the Office of Initial Patent Examination for further processing.

Telephone inquiries should be directed to the undersigned at (703) 305-0010.

K. A. McLaughlin

Kenya A. McLaughlin
Petitions Attorney
Office of Petitions
Office of the Deputy Commissioner
for Patent Examination Policy

UNITED STATES PATENT AND TRADEMARK OFFICE

COMMISSIONER FOR PATENTS
UNITED STATES PATENT AND TRADEMARK OFFICE
WASHINGTON, D.C. 20231
www.uspto.gov

Paper No. 9

SWIDLER BERLIN SHEREFF FRIEDMAN, LLP
3000 K STREET, NW
BOX IP
WASHINGTON DC 20007

COPY MAILED

JUL 3 0 2002

OFFICE OF PETITIONS

In re Application of
Flesner, Chaston, Anuff, Moses, MacLeod,
Leiser, Muoto, Ladygo, Slesinsky, and Joyce
Application No.:09/886,614
Filed: June 22, 2001
Attorney Docket No: 19312.0015
For: PORTAL SERVER THAT PROVIDES MODIFICATION OF USER INTERFACES FOR ACCESS TO COMPUTER NETWORKS

: ON RENEWED PETITION

This is in response to the renewed petition under 37 CFR 1.47(a), filed June 22, 2002.

The petition is GRANTED.

The initial petition under 37 CFR 1.47(a) was filed on February 21, 2002, in response to a "Notice to File Missing Parts of Non-Provisional Application" (the "Notice") which indicated that a proper oath or declaration had not been filed and that a surcharge for either a late filing fee or oath or declaration was due and owing. A decision dismissing the petition of February 21, 2002, was mailed on May 20, 2002. The decision indicated that petitioner did not provided adequate documentation to substantiate petitioner's diligent effort to locate the non-signing inventors, nor did petitioner provide sufficient proof that the entire application was presented to the non-signing inventors as is required. . The decision also advised petitioner of the two-month period for reply beginning from the mailing date of the decision and that extension of time for reply were available pursuant to 37 CFR 1.136(a). On June 22, 2002, petitioner filed a renewed petition. Petitioner also filed a declaration executed by all the named inventors, except inventor Ladygo.

Petitioner has established that, despite petitioner's diligent efforts, petitioner was unable to locate inventor Ladygo. As provided in Rule 1.47(c), this Office will forward notice of this application's filing to the non-signing inventor at the address given in the petition. Notice of the filing of this application will also be published in the Official Gazette.

This application will be forwarded to the Office of Initial Patent Examination for further processing.

Telephone inquiries should be directed to the undersigned at (703) 305-0010.

K. A. McLaughlin

Kenya A. McLaughlin
Petitions Attorney
Office of Petitions
Office of the Deputy Commissioner
for Patent Examination Policy

UNITED STATES PATENT AND TRADEMARK OFFICE

COMMISSIONER FOR PATENTS
UNITED STATES PATENT AND TRADEMARK OFFICE
WASHINGTON, D.C. 20231
www.uspto.gov

Seth Ladygo
1040 Harrison Street
Denver, CO 80206

COPY MAILED

JUL 3 0 2002

OFFICE OF PETITIONS

In re Application of
Flesner, Chaston, Anuff, Moses, MacLeod, Leiser
Muoto, Ladygo, Slesinsky, and Joyce
Application No. 09/886,614
Filed: June 22, 2001
Attorney Docket Number: 19312.0015
For: PORTAL SERVER THAT PROVIDES MODIFICATION OF USER INTERFACES FOR ACCESS TO COMPUTER NETWORKS

LETTER

Dear Mr. Ladygo:

You are named as a joint inventor in the above-identified United States patent application filed under the provisions of 35 U.S.C. 116 (United States Code) and 37 CFR 1.47(a), Rules of Practice in Patent Cases. Should a patent be granted on the application you will be designated therein as a joint inventor.

As a joint inventor, you are entitled to inspect any paper in the file wrapper of the application, order copies of all or any part thereof (at a prepaid cost per 37 CFR 1.19) or make your position of record in the application. Alternatively, you may arrange to do any of the preceding through a registered patent attorney or agent presenting written authorization from you. If you care to join the application, counsel of record (see below) would presumably assist you. Joining in the application would entail the filing of an appropriate oath or declaration by you pursuant to 37 CFR 1.63.

Telephone inquiries regarding this communication should be directed to Petitions Attorney Kenya A. McLaughlin at (703) 305-0010. Requests for information regarding your application should be directed to the File Information Unit at (703) 308-2733. Information regarding how to pay for and order a copy of the application, or a specific paper in the application, should be directed to Certification Division at (703) 308-9726 or 1-800-972-6382 (outside the Washington D.C. area).

K. A. McLaughlin

Kenya A. McLaughlin
Petitions Attorney
Office of Petitions
Office of the Deputy Commissioner
for Patent Examination Policy

cc:
SWIDLER BERLIN SHEREFF FRIEDMAN, LLP
3000 K STREET, NW
BOX IP
WASHINGTON DC 20007

UNITED STATES PATENT AND TRADEMARK OFFICE

COMMISSIONER FOR PATENTS
UNITED STATES PATENT AND TRADEMARK OFFICE
WASHINGTON, D.C. 20231
www.uspto.gov

Paper No. 13

Swidler Berlin Shereff Friedman, LLP
3000 K Street, NW
Box IP
Washington, DC

COPY MAILED
JAN 22 2003
OFFICE OF PETITIONS

In re Application of
Flesner, Chaston, Anuff, Moses, MacLeod, Leiser,
Muoto, Ladygo, Slesinsky, Joyce
Application No.: 09/886,614
Filed: June 22, 2001
Attorney Docket No: 19312.0015
For: PORTAL SERVER THAT PROVIDES MODIFICATION OF USER INTERFACES FOR ACCESS TO COMPUTER NETWORKS

ON PETITION

This is in response to the "Request to Join Inventor and Remove Application Status Under 37 CFR 1.47(a)" filed August 6, 2002.

The request is **GRANTED**.

On July 30, 2002, a decision was mailed granting the above-cited application status under 37 CFR 1.47(a) because it was believed that inventor Ladygo was not available to join the application. On August 6, 2002, a declaration under 37 CFR 1.63 executed by inventor Ladygo was filed.

Based on the aforementioned, decision of July 30, 2002, granting status under 37 CFR 1.47(a) for the above-cited application is **vacated**. Because all named inventors have executed a declaration under 37 CFR 1.63, there is no remedy that could be provided by a petition under 37 CFR 1.47(a). The renewed petition under 37 CFR 1.47(a) filed June 22, 2002, is, therefore, rendered **moot**.

This application will be forwarded to the Office of Initial Patent Examination for further processing.

Telephone inquiries regarding this matter may be directed to the undersigned at (703) 305-0010.

Kenya A. McLaughlin

Kenya A. McLaughlin
Petitions Attorney
Office of Petitions

SPE RESPONSE FOR CERTIFICATE OF CORRECTION

Paper No.: ____

DATE : 3-19-07

TO SPE OF : ART UNIT 2871

SUBJECT : Request for Certificate of Correction on Patent No.: 7113240 B2 (09/886636)

A response is requested with respect to the accompanying request for a certificate of correction.

Please complete this form and return with file, within 7 days to:
Certificates of Correction Branch - PK 3-915
Palm location 7580 - Tel. No. 305-8309

With respect to the change(s) requested, correcting Office and/or Applicant's errors, should the patent read as shown in the certificate of correction? No new matter should be introduced, nor should the scope or meaning of the claims be changed.

Should Fig. 27 be replaced?

Thank You For Your Assistance

Certificates of Correction Branch

The request for issuing the above-identified correction(s) is hereby:
Note your decision on the appropriate box.

- ☐ Approved — All changes apply.
- ☐ Approved in Part — Specify below which changes do not apply.
- ☐ Denied — State the reasons for denial below.

Comments:

SPE

Art Unit

PTOL-306 (REV. 7/03)

U.S. DEPARTMENT OF COMMERCE Patent and Trademark

UNITED STATES PATENT AND TRADEMARK OFFICE

Commissioner for Patents
United States Patent and Trademark Office
P.O. Box 1450
Alexandria, VA 22313-1450
www.uspto.gov

EDWARD S. WRIGHT
1100 ALMA STREET, SUITE 207
MENLO PARK, CA 94025

COPY MAILED
NOV 15 2004
OFFICE OF PETITIONS

In re Application of
Stephen Edward Savas et al
Application No. 09/886,654
Filed: June 21, 2001
Attorney Docket No. A-70178/ESW

ON PETITION

This is a decision on the petition under 37 CFR 1.182, filed August 27, 2004, to change the order of inventorship.

The petition is **granted.**

Telephone inquiries concerning this matter may be directed to Irvin Dingle at (571) 272-3210.

Irvin Dingle
Petitions Examiner
Office of Petitions
Office of the Deputy Commissioner
for Patent Examination Policy

Attachment: Corrected Filing Receipt

UNITED STATES PATENT AND TRADEMARK OFFICE

Commissioner for Patents
United States Patent and Trademark Office
P.O. Box 1450
Alexandria, VA 22313-1450
www.uspto.gov

BORDEN LADNER GERVAIS LLP
WORLD EXCHANGE PLAZA
100 QUEEN STREET SUITE 1100
OTTAWA ON K1P 1J9 CA CANADA

COPY MAILED
NOV 21 2006
OFFICE OF PETITIONS

In re Application of	:	
O'HALLORAN, et al.	:	
Application No. 09/886,687	:	DECISION ON PETITION
Filed: June 21, 2001	:	TO WITHDRAW
Attorney Docket No. 15-925 4983	:	FROM RECORD
	:	

This is a decision on the Request to Withdraw as attorney or agent of record under 37 C.F.R. § 1.36(b), filed August 21, 2006.

The request is **APPROVED**.

A grantable request to withdraw as attorney/agent of record must be signed by every attorney/agent seeking to withdraw or contain a clear indication that one attorney is signing on behalf of another/others. A request to withdraw will not be approved unless at least 30 (thirty) days would remain between the date of approval and the later of the expiration date of a time to file a response or the expiration date of the maximum time period which can be extended under 37 C.F.R. § 1.136(a).

The request was signed by Anne Kinsman on behalf of all attorneys of record who are associated with Customer Number 26123. All attorneys/agents associated with the Customer Number 26123 have been withdrawn.

Applicant is reminded that there is no attorney of record at this time.

The request to change the correspondence of record is not acceptable as the requested correspondence address is not that of: (1) the first named signing inventor; or (2) an intervening assignee of the entire interest under 37 C.F.R 3.71. All future communications from the Office will be directed to the first named signing inventor at the first copied address below until otherwise properly notified by the applicant.

There is no outstanding Office action that requires a reply from the applicant.

Telephone inquiries concerning this decision should be directed to Patricia Volpe at 571-272-6825.

Patricia Volpe
Petitions Examiner
Office of Petitions

cc: Steve O'Halloran
7122 Quinnfeld Way
Greely, ON KIP 4B6
CANADA

cc: Microsoft Corporation
One Microsoft Way
Redmond, VA 98052-6399

UNITED STATES PATENT AND TRADEMARK OFFICE

UNITED STATES DEPARTMENT OF COMMERCE
United States Patent and Trademark Office
Address: COMMISSIONER FOR PATENTS
P.O. Box 1450
Alexandria, Virginia 22313-1450
www.uspto.gov

APPLICATION NUMBER	FILING OR 371 (c) DATE	FIRST NAMED APPLICANT	ATTY. DOCKET NO./TITLE
09/886,687	06/21/2001	Steve O'Halloran	15-925 4983

CONFIRMATION NO. 8654

OC000000021305698

26123
BORDEN LADNER GERVAIS LLP
WORLD EXCHANGE PLAZA
100 QUEEN STREET SUITE 1100
OTTAWA, ON K1P 1J9
CANADA

Date Mailed: 11/21/2006

NOTICE REGARDING CHANGE OF POWER OF ATTORNEY

This is in response to the Power of Attorney filed 08/21/2006.

- The withdrawal as attorney in this application has been accepted. Future correspondence will be mailed to the new address of record. 37 CFR 1.33.

PATRICIA A VOLPE
OP (571) 272-6825

FORMER ATTORNEY/AGENT COPY

UNITED STATES PATENT AND TRADEMARK OFFICE

Commissioner for Patents
United States Patent and Trademark Office
P.O. Box 1450
Alexandria, VA 22313-1450
www.uspto.gov

SENNIGER POWERS LLP (MSFT)
ONE METROPOLITAN SQUARE, 16TH FLOOR
ST. LOUIS, MO 63102

COPY MAILED

JUN 13 2008

OFFICE OF PETITIONS

In re Application of	:	
Steve O'Halloran, et. al.	:	
Application No. 09/886,687	:	ON PETITION
Filed: June 21, 2001	:	
Attorney Docket No. MS#317975.03 (5347)	:	

This is a decision on the petition under 37 CFR 1.137(b), filed July 26, 2007 and February 29, 2008, to revive the above-identified application.

The application became abandoned for failure to respond to the non-final Office action mailed December 12, 2006. A Notice of Abandonment was mailed on July 23, 2007.

The petition satisfies the requirements of 37 CFR 1.137(b) in that petitioner has supplied (1) the reply in the form of an amendment; (2) the petition fee of $1,500; and (3) a proper statement of unintentional delay. Therefore, the petition is **GRANTED**.

This application file is being referred to Technology Center Art Unit 3627 for review of the amendment filed with the instant petition.

Telephone inquiries concerning this decision should be directed to the undersigned at (571) 272-3226.

Andrea Smith
Petitions Examiner
Office of Petitions

UNITED STATES PATENT AND TRADEMARK OFFICE

COMMISSIONER FOR PATENTS
UNITED STATES PATENT AND TRADEMARK OFFICE
P.O. BOX 1450
ALEXANDRIA, VA 22313-1450
www.uspto.gov

BC
Mailed: Paper Number __

In re application of
John J. Curro et al.
Serial No. 09/886,730
Filed: June 21, 2001
For: ELASTIC LAMINATE WEB

: DECISION ON
: PETITION

DECISION

This is a decision on the PETITION, filed on November 4, 2003, requesting entry and consideration of Applicants' enclosed copy of a substitute photograph encompassing Figures 1 and 2. It is stated that the original photograph was erroneously submitted to the Office on October 29, 2003 as an attachment to John Curro's Declaration under 37 C.F.R. 1.132. The instant PETITION appears to contain only a request to the examiner for substitution of the enclosed photograph. Accordingly, there does not appear to be a petitionable issue detailed in the PETITION. Specifically, the request does not pertain to a specific "action or requirement" made by the examiner in the *ex parte* prosecution of the application, as required by a PETITION filed under 37 C.F.R. 1.181. Moreover, there does not appear to be an intention on considering the PETITION under 37 C.F.R. 1.59 to expunge papers from the patent application file, since none of the requirements under 37 C.F.R. 1.59 have been fulfilled. Thus, this PETITION is being forwarded to the examiner to treat the merits of the PETITION as a request.

Accordingly, this PETITION is **dismissed**.

JMStone

Jacqueline Stone, Director
Technology Center 1700
Chemical and Materials Engineering

Angela M. Stone
The Procter & Gamble Company
Intellectual Property Division
Winton Hill Technical Center – Box 161
6110 Center Hill Avenue
Cincinnati, OH 45224

UNITED STATES PATENT AND TRADEMARK OFFICE

COMMISSIONER FOR PATENTS
UNITED STATES PATENT AND TRADEMARK OFFICE
P.O. BOX 1450
ALEXANDRIA, VA 22313-1450
www.uspto.gov

BC
Mailed: Paper Number __

In re application of
John J. Curro et al.
Serial No. 09/886,740
Filed: June 21, 2001
For: APPLICATIONS FOR LAMINATE WEB

DECISION ON PETITION

DECISION

This is a decision on the PETITION, filed on November 4, 2003, requesting entry and consideration of Applicants' enclosed copy of a substitute photograph encompassing Figures 1 and 2. It is stated that the original photograph was erroneously submitted to the Office on October 29, 2003 as an attachment to John Curro's Declaration under 37 C.F.R. 1.132. The instant PETITION appears to contain only a request to the examiner for substitution of the enclosed photograph. Accordingly, there does not appear to be a petitionable issue detailed in the PETITION. Specifically, the request does not pertain to a specific "action or requirement" made by the examiner in the *ex parte* prosecution of the application, as required by a PETITION filed under 37 C.F.R. 1.181. Moreover, there does not appear to be an intention on considering the PETITION under 37 C.F.R. 1.59 to expunge papers from the patent application file, since none of the requirements under 37 C.F.R. 1.59 have been fulfilled. Thus, this PETITION is being forwarded to the examiner to treat the merits of the PETITION as a request.

Accordingly, this PETITION is **dismissed**.

JMStone

Jacqueline Stone, Director
Technology Center 1700
Chemical and Materials Engineering

Angela M. Stone
The Procter & Gamble Company
Intellectual Property Division
Winton Hill Technical Center – Box 161
6110 Center Hill Avenue
Cincinnati, OH 45224

UNITED STATES PATENT AND TRADEMARK OFFICE

COMMISSIONER FOR PATENTS
UNITED STATES PATENT AND TRADEMARK OFFICE
WASHINGTON, D.C. 20231
www.uspto.gov

Paper No. 4

J. Gustav Larson
Simon Galasso & Frantz PLC
P. O. Box 26503
Austin, TX 78755

APR 4 2002

In re Application of:
Chan et al.
Application No. 09/886,741
Filed: June 21, 2001

DECISION ON PETITION
TO MAKE SPECIAL

This is a decision on the petition under 37 C.F.R. § 1.102, filed February 28, 2002, to make the above-identified application special.

Petitioner requests that the above-identified application be made special under the accelerated examination procedure set forth in the Manual of Patent Examining Procedure (M.P.E.P.), Section 708.02, Item VIII: Accelerated Examination.

A grantable petition to make special under 37 C.F.R. § 1.102 and in accordance with M.P.E.P., Section 708.02, Item VIII, must be accompanied by (a) the fee set forth in 37 C.F.R. § 1.17(h), (b) a statement that all claims are directed a single invention or an offer to make an oral election without traverse should the Patent and Trademark Office hold that the claims are not directed to a single invention, © a statement that a pre-examination search has been made by the inventor, attorney, agent, professional searcher, etc., and a listing of the field of search by class and subclass, (d) one copy of each of the references deemed most closely related to the subject matter encompassed by the claims, and (e) a detailed description of the submitted references and discussions pointing out how the claimed subject matter is distinguishable over these references.

For the above stated reasons, the petition is **GRANTED**.

If the examiner can make this application special without prejudice to any possible interfering applications, and he/she should make a rigid search for such, he/she is authorized to do so for the next action. Should the application be rejected, the application will not be considered special for the subsequent action unless the applicant promptly makes a bona fide effort to place the application in condition for allowance, even if it is necessary to have an interview with the examiner to accomplish this purpose.

If the examiner finds any interfering application for the same subject matter, he/she should consider such application simultaneously with this application and should state in the official letter of such application that she/he is taking it out of its turn because of possible interference.

Should an appeal be taken in this application or should this application becomes involved in an interference, consideration of the appeal and the interference will be expedited by all Patent and Trademark Office officials concerned, contingent likewise upon diligent prosecution by the applicant.

After allowance, this application will be given priority for printing. See M.P.E.P. § 1309.

Inquiries regarding this decision should be directed to Michael L. Gellner at 703-308-1721

M. L. Gellner

Michael L. Gellner, Special Programs Examiner
Technology Center 2800
Semiconductors, Electrical and Optical
Systems and Components

UNITED STATES PATENT AND TRADEMARK OFFICE

UNITED STATES DEPARTMENT OF COMMERCE
United States Patent and Trademark Office
Address: COMMISSIONER FOR PATENTS
P.O. Box 1450
Alexandria, Virginia 22313-1450
www.uspto.gov

SEYFARTH SHAW LLP
131 S. DEARBORN ST., SUITE 2400
CHICAGO, IL 60603-5803

Mail Date: 04/21/2010

Applicant	: Anthony J. Baerlocher	: DECISION ON REQUEST FOR
Patent Number	: 6835133	: RECALCULATION of PATENT
Issue Date	: 12/28/2004	: TERM ADJUSTMENT IN VIEW
Appliction No	: 09/886,751	: OF WYETH
Filed	: 06/21/2001	:
		:

The Patentee's Request for Recalculation is **DISMISSED.**

This Request is deemed ineligible for consideration for one or more of the following reasons:

(A). The patent for which PTA recalculation is requested is either a design or reissue application or is a reexamination proceeding;

(B). The patent for which PTA recalculation is requested resulted from a utility or plant application filed under 35 USC 111(a) before May 29, 2000 and no CPA filed in the application on/after May 29, 2000;

(C). The patent for which PTA recalculation is requested resulted from an international application in which the international filing date was before May 29, 2000 and no CPA filed in the application on/after May 29, 2000;

(D). The patent for which PTA recalculation is requested issued on/after March 2, 2010;

(E). The Request for Recalculation was filed more than 180 days after the grant date of the patent and the request was not filed within two months of a dismissal of a request for reconsideration of the of the patent term under 37 CFR 1.705(d);

(F). The Request for Recalculation is not solely limited to USPTO pre-Wyeth interpretation of 35 U.S.C. 154(b)(2)(A);

or

(G). A civil action was filed pursuant to 35 U.S.C. 154(b)(4)(A)concerning the same patent at issue in this request.

Patentee may file a reply to this decision dismissing the Request for Recalculation. Patentee must file such reply within one month or thirty days, whichever is longer, of the mail date of the decision dismissing the Request for Recalculation. No fee is required if patentee is asserting in the reply that the dismissal for ineligibility is improper.

Patentee should use document code PET.OP if electronically filing a reply to this dismissal. If the USPTO finds that the request was improperly deemed ineligible, the USPTO will mail applicant a recalculation determination.

Patentee should be aware that in order to preserve the right to review in the United States District Court for the District of Columbia of the USPTO patent term adjustment determination, patentee must ensure that he or she also take the steps required under 35 U.S.C. 154(b)(4)(A). Nothing in the request for recalculation should be construed as providing an alternative time frame for commencing a civil action under 35 U.S.C. 154 (b)(4)(A).

Any questions concerning this decision should be directed to the Office of Patent Legal Administration at 571-272-7702.

UNITED STATES PATENT AND TRADEMARK OFFICE

Commissioner for Patents
United States Patent and Trademark Office
P.O. Box 1450
Alexandria, VA 22313-1450
www.uspto.gov

FISH & NEAVE IP GROUP
ROPES & GRAY LLP
1251 AVENUE OF THE AMERICAS FL C3
NEW YORK NY 10020-1105

COPY MAILED
JUN 2 2 2006
OFFICE OF PETITIONS

In re Application of :
Bemis et al. :
Application No. 09/886,773 :
Filed: June 21, 2001 :
Attorney Docket No. VPI-04DIV5 :

ON PETITION

This is a decision on the petition under 37 CFR 1.181, filed September 9, 2005, to withdraw the holding of abandonment in the above-identified application. The petition was recently forwarded to the Office of Petitions for a decision on the merits. The Office sincerely apologizes for any inconvenience.

A review of the record reveals that on March 1, 2004, the Office mailed a Notice to Comply with Requirements for Patent Applications Containing Nucleotide and/or Amino Acid Sequence Disclosures (Notice to Comply), which set a one-month extendable period to reply. On April 1, 2004, applicants submitted a Statement to Verify Content of Computer Readable Form Submission and a paper copy of the sequence listing. However, on the same day (April 1, 2004), the Office mailed a Notice to Comply, stating that applicants' Amendments filed on March 3, 2004, and March 11, 2004, were non-responsive to the Notice of March 1, 2004. Additionally, the Notice to Comply set a one-month extendable time period for applicants to comply with the sequence disclosure rules. On February 28, 2005, applicants submitted a Corrected Reply to the Notice to Comply. On July 14, 2005, the Office mailed a Notice of Abandonment, stating that the application became abandoned for failure to file a proper reply to the Office letter mailed on April 1, 2004. The Notice of Abandonment further indicated:

> On 3/1/04, a requirement for CFR sequence listing was mailed. Pursuant to the response filed 4/1/04, applicants made an (unsuccessful) attempt to comply with the sequence listing requirement. In a letter mailed 4/1/04, applicants were informed that they had still not complied with sequence rules. Applicants did finally comply with the sequence rules, but not until 2/18/05, which is beyond the 6 month statutory deadline for compliance.

On September 9, 2005, applicants filed the present petition. Applicants asserted that the Notice to Comply and the Response, both of April 1, 2004, had crossed in the mail. Applicants stated that the examiner did not provide them with written notice that the Response of April 1, 2004, was defective.

On further review, the record reveals that the Notice to Comply and the Response, both of April 1, 2004, had crossed in the mail. Additionally, the record indicates that the examiner did not mail any Office communication after the Notice to Comply of April 1, 2004, informing applicants in writing that he had considered their Response of April 1, 2004, and determined it was defective. Additionally, the examiner did not set a new time period for applicants to respond to correct the deficiencies in their April 1, 2004 Response.

For these reasons, the petition under 37 CFR 1.181 is **GRANTED**. The holding of abandonment is withdrawn.

The matter is being referred to Technology Center Art Unit 1654.

Telephone inquiries should be directed to the undersigned at (571) 272-3211.

Christina Donnell

Christina Tartera Donnell
Senior Petitions Attorney
Office of Petitions

UNITED STATES PATENT AND TRADEMARK OFFICE

Under Secretary of Commerce for Intellectual Property and
Director of the United States Patent and Trademark Office
Washington, D.C. 20231
www.uspto.gov

Paper No. 3

HICKMAN PALERMO TRUONG & BECKER LLP
1600 WILLOW STREET
SAN JOSE, CA 95215-5106

COPY MAILED

DEC 0 3 2001

OFFICE OF PETITIONS

In re Application of	:
Andrew Witkowski et al	: DECISION DISMISSING PETITION
Application No. 09/886,839	: UNDER 37 CFR 1.182
Filed: June 20, 2001	:
Attorney Docket No. 50277-1546	:

This is a decision on the petition under 37 CFR 1.182 filed on October 11, 2001, requesting acceptance of an unintentionally delayed notice of the filing of a corresponding PCT application under 35 USC 122(b)(2)(B)(iii).

The petition is **dismissed** for the reasons stated below.

A petition under 37 CFR 1.182 is directed to those situations not specifically provided for in the regulations. Since acceptance of an unintentionally delayed notice of the filing of an application in a foreign country or under a multinational treaty that requires publication of applications 18 months after filing under 35 USC 122(b)(2)(B)(iii) is provided for, if at all, in 37 CFR 1.137(f), the petition under 37 CFR 1.182 filed on October 11, 2001 is dismissed as inappropriate. In view thereof, no decision on the merits of the petition will be given until an appropriate petition under 37 CFR 1.137(f), accompanied by the requisite petition fee set forth in 37 CFR 1.17(m), is filed.

The request to rescind the previous nonpublication request has been processed. A corrected filing receipt indicating the projected date of publication accompanies this decision.

This application is being forwarded to Technology Center AU 2184 for examination in due course.

Inquiries concerning this matter may be directed to the undersigned at (703) 305-8680.

Frances Hicks

Frances Hicks
Petitions Examiner
Office of Petitions
Office of the Deputy Commissioner
for Patent Examination Policy

ATTACHMENT: Corrected Filing Receipt

Conferree: Joni Chang

UNITED STATES PATENT AND TRADEMARK OFFICE

COMMISSIONER FOR PATENTS
UNITED STATES PATENT AND TRADEMARK OFFICE
WASHINGTON, D.C. 20231
www.uspto.gov

Paper No. 6

HICKMAN PALERMO TRUONG & BECKER, LLP
1600 WILLOW STREET
SAN JOSE CA 95125

COPY MAILED

JUL 12 2002

OFFICE OF PETITIONS

In re Application of
Witkowski, et al.
Application No. 09/886,839
Filed: June 20, 2001
Attorney Docket No. 50277-1546

ON PETITION

This is a decision on the petition, filed April 15, 2002, to revive the instant nonprovisional application under the unintentional provisions of 37 CFR 1.137(f).

The petition is **GRANTED**.

Petitioner states that the instant nonprovisional application is the subject of a PCT international application filed on June 20, 2001. However, the US Patent and Trademark Office was unintentionally not notified of this filing within 45 days subsequent to the filing of the PCT application.

In view of the above, this application became abandoned pursuant to 35 USC 122(b)(2)(B)(iii) and 37 CFR 1.213(c) for failure to timely notify the Office of the filing of an application in a foreign country, or under a multilateral international agreement, that requires publication of applications 18 months after filing.

A petition under 37 CFR 1.137(f) must be accompanied by:

(1) the reply, which is met by the notification of such filing in a foreign country or under a multinational treaty;

(2) the petition fee as set forth in 37 CFR 1.17(m); and

(3) a statement that the entire delay in filing the required reply from the due date of the reply until the filing of a grantable petition was unintentional.

The instant petition has been found to be in compliance with 37 CFR 1.137(f). Accordingly, the failure to timely notify the Office of a foreign or international filing within 45 days after the date of filing of such foreign or international application as provided by 35 USC 122(b)(2)(B)(iii) and 37 CFR 1.213(c) is accepted as having been unintentionally delayed.

The previous Request and Certification under 35 USC 122(b)(2)(B)(i) has been rescinded.

The application is being returned to the Office of Initial Patent Examination Division for issuance of a corrected filing receipt indicating a projected publication date.

Telephone inquiries regarding this decision should be directed to the undersigned at (703) 305-0272.

Cliff Congo
Petitions Attorney
Office of Petitions
Office of the Deputy Commissioner
for Patent Examination Policy

UNITED STATES PATENT AND TRADEMARK OFFICE

COMMISSIONER FOR PATENTS
UNITED STATES PATENT AND TRADEMARK OFFICE
WASHINGTON, D.C. 20231
www.uspto.gov

Paper No. 10

Maria McCormack Sobirno
Blakely, Sokoloff, Taylor, & Zafman, L.L.P.
Seventh Floor
12400 Wilshire Boulevard
Los Angeles, CA 90025-1026

COPY MAILED

JAN 30 2002

OFFICE OF PETITIONS

In re Application of:
Franz, *et al.*
Application No. 09/886,850
Filed: June 20, 2001
Attorney Docket No. 80398.P178C

DECISION ~~GRANTING~~ DISMISSING
PETITION

I. BACKGROUND

This is a decision on the August 13, 2001 petition under 37 C.F.R. §1.10(c) requesting that the above-identified application be accorded a filing date of June 20, 2001, rather than the presently accorded filing date of June 21, 2001.

II. THE RULE

37 C.F.R. § 1.10 Filing of correspondence by "Express Mail."

(a)...

(b)...

(c) Any person filing correspondence under this section that was received by the Office and delivered by the "Express Mail Post Office to Addressee" service of the USPS, who can show that there is a discrepancy between the filing date accorded by the Office to the correspondence and the date of deposit as shown by the "date-in" on the "Express Mail" mailing label or other official USPS notation, may petition the Commissioner to accord the correspondence a filing date as of the "date-in" on the "Express Mail" mailing label or other official USPS notation, provided that:

(1) The petition is filed promptly after the person becomes aware that the Office has accorded, or will accord, a filing date other than the USPS deposit date;

(2) The number of the "Express Mail" mailing label was placed on the paper(s) or fee(s) that constitute the correspondence prior to the original mailing by "Express Mail;" and

(3) The petition includes a true copy of the "Express Mail" mailing label showing the "date-in," and of any other official notation by the USPS relied upon to show the date of deposit.

(d)...

...

IV. ANALYSIS

Petitioner alleges that the application was deposited in Express Mail service on June 20, 2001. In support, the petition is accompanied by a copy of Express Mail receipt no. EL234218104US (the same Express Mail number found on the original application papers located in the official file) showing a "date in" of June 20, 2001.

However, the application in the file wrapper bears a certificate of mailing that carries the Express Mail label number EL164806463US. Accordingly, the copy of Express Mail label number EL234218104US (the one provided with this petition) is of no relevance to the issue at hand.

V. CONCLUSION

In view of the above, *this petition is* ***dismissed***.

Any request for reconsideration of this decision must be submitted within TWO (2) MONTHS from the mail date of this decision. Extensions of time under 37 C.F.R. §1.136(a) are permitted. The reconsideration request should include a cover letter entitled "Renewed Petition under 37 C.F.R. §1.10(c)".

Further correspondence with respect to this matter should be addressed as follows:

By mail: Assistant Commissioner for Patents
Box DAC
Washington, D.C. 20231

By FAX: (703) 308-6916
Attn: Office of Petitions

By hand: Office of Petitions
Four Crystal Plaza, Suite 3C23
2201 South Clark Place
Arlington, VA 22202

Telephone inquiries concerning this matter may be directed to the undersigned in the Office of Petitions at (703) 306-5593.

Scott M. Ledford
Attorney
Office of Petitions
Office of the Deputy Assistant Commissioner
for Patent Examination Policy

SPE RESPONSE FOR CERTIFICATE OF CORRECTION

Paper No.: _____

DATE : 1/8/09

TO SPE OF : ART UNIT 2814 Fahmy Wael (Spe)

SUBJECT : Request for Certificate of Correction for Appl. No.: 09/886854 Patent No.: 7166910

Please respond to this request for a certificate of correction within 7 days.

FOR IFW FILES:

Please review the requested changes/corrections as shown in the **COCIN** document(s) in the IFW application image. No new matter should be introduced, nor should the scope or meaning of the claims be changed.

Please complete the response (see below) and forward the completed response to scanning using document code **COCX**.

FOR PAPER FILES:

Please review the requested changes/corrections as shown in the attached certificate of correction. Please complete this form (see below) and forward it with the file to:

Certificates of Correction Branch (CofC)
South Tower - 9A22
Palm Location 7580

Certificates of Correction Branch
703-308-9390 ext. _____

Thank You For Your Assistance

The request for issuing the above-identified correction(s) is hereby:
Note your decision on the appropriate box.

- ☒ **Approved** — **All** changes apply.
- ☐ **Approved in Part** — Specify below which changes **do not** apply.
- ☐ **Denied** — State the reasons for denial below.

Comments: The changes to the claims and drawings have not introduce any new matter nor change the scope or meaning of the claims.

/Thao X. Le/ — **SPE**

2892 — **Art Unit**

UNITED STATES PATENT AND TRADEMARK OFFICE

COMMISSIONER FOR PATENTS
UNITED STATES PATENT AND TRADEMARK OFFICE
P.O. BOX 1450
ALEXANDRIA, VA 22313-1450
WWW.USPTO.GOV

Paper No. None

COPY MAILED

APR 21 2005

OFFICE OF PETITIONS

Hanna Albert Awad
Ajaltown
Kesrowan LB LEBANON

In re Application of Hanna Albert Awad Application No. 09/886,862 Filed: November 20, 2001 Title: CONCEPTS AND THEIR APPLICATIONS, PUMPS, COMPRESSORS WORKING ON VALVES AND ENGINES WORKING ON THOSE COMPRESSORS	DECISION DISMISSING PETITION UNDER 37 C.F.R. §1.137(a)

This is a decision on the petition filed November 1, 2004, pursuant to 37 C.F.R. §1.137(a)[1], to revive the above-identified application.

The above-identified application became abandoned for failure to file an appeal brief within two months of the submission of the Notice of Appeal. On September 24, 2002, a final Office action was mailed. On February 11, 2003, a Notice of Appeal was received, along with the fee associated with the filing of the Notice of Appeal and a two-month extension of time to make timely this response. No appeal brief was received. Pursuant to 37 C.F.R. §1.192[2], the failure to

1 A grantable petition pursuant to 37 CFR §1.137(a) must be accompanied by:

(1) the required reply (in a nonprovisional application abandoned for failure to prosecute, the required reply may be met by the filing of a continuing application; in an application or patent, abandoned or lapsed for failure to pay the issue fee or any portion thereof, the required reply must be the payment of the issue fee or any outstanding balance thereof);

(2) the petition fee;

(3) a showing to the satisfaction of the Commissioner that the entire delay in filing the required reply from the due date for the reply until the filing of a grantable petition pursuant to this paragraph was unavoidable, and;

(4) a terminal disclaimer (and fee as set forth in §1.20(d)) required pursuant to paragraph (d) of this section.

2 37 CFR 1.192. Appellant's brief:

(a) Appellant must, within two months from the date of the notice of appeal under § 1.191 or within the time allowed for reply to the action from which the appeal was taken, if such time is later,

submit an appeal brief within two months from the date of the notice of appeal will result in the abandonment of the application. Accordingly, the above-identified application became abandoned on April 12, 2003. A Notice of Abandonment was mailed November 28, 2003.

The Changes of Correspondence Address, submitted on April 26, 2004 and May 3, 2004, have been entered and made of record.

Petition fee requirement

The fee for filing a petition to revive an unavoidably abandoned application under 37 C.F.R. § 1.137(a) is set forth in 37 C.F.R. §1.17(l) as being $500 for a large entity and $250 for a small entity. Therefore, requirement number (2) has not been met.

The payment of the required petition fee is a prerequisite to the filing of a petition to revive under 37 C.F.R. §1.137. Therefore, consideration of the merits of the petition before receipt of the filing fee would be premature. See M.P.E.P. 711.03(c)(III)(B)[3]

In view of the foregoing, this petition is **DISMISSED**.

Any reply must be submitted within **TWO (2) MONTHS** from the mail date of this decision. Extensions of time under 37 C.F.R. §1.136(a) are permitted. The reply should include a cover letter entitled "Renewed Petition Under 37 C.F.R. 1.137(a)," and should include the petition fee. This is not a final agency action within the meaning of 5 U.S.C 704.

The renewed petition should indicate in a prominent manner that the attorney handling this matter is Paul Shanoski.

To help assure prompt and proper attention to your response, please see Request for Alert Concerning Submitted Petitions, 1282 Official Gazette (May 18, 2004) for further information on how to assist the Office in delivering your submission to the correct location. The Petitioner may wish to consider telephoning the undersigned one month after the submission is made to confirm that the documents were properly delivered.

Any renewed petition may be submitted by mail[4], hand-delivery[5], or facsimile[6].

---

file a brief in triplicate. The brief must be accompanied by the fee set forth in § 1.17(c) and must set forth the authorities and arguments on which appellant will rely to maintain the appeal. Any arguments or authorities not included in the brief will be refused consideration by the Board of Patent Appeals and Interferences, unless good cause is shown.
(b) On failure to file the brief, accompanied by the requisite fee, within the time allowed, the appeal shall stand dismissed.

[3] "...[T]he payment of a petition fee to obtain the revival of an abandoned application is a statutory prerequisite to revival of the abandoned application and cannot be waived. In addition, the phrase '[o]n filing' in 35 U.S.C. §41(a)(7) means that the petition fee is required for the filing (and not merely the grant) of a petition under 37 C.F.R. §1.137. See H.R. Rep. No. 542, 97th Cong., 2nd Sess. 6 (1082), *reprinted in* 1982 U.S.C.C.A.N. 770 ('[t]he fees set forth in this section are due on filing the petition'). Therefore, the Office...will not reach the merits of any petition under 37 C.F.R. §1.137 lacking the requisite petition fee."

4 Mail Stop Petition, Commissioner for Patents, United States Patent and Trademark Office, P.O. Box 1450,

The application file will be retained in the Office of Petitions for two (2) months.

The general phone number for the Office of Petitions which should be used for status requests is (571) 272-3282. Telephone inquiries regarding *this decision* should be directed to the undersigned at (571) 272-3225.

Paul Shanoski
Senior Attorney
Office of Petitions
United States Patent and Trademark Office

Alexandria, VA, 22313-1450.

5 Customer Window, Randolph Building, 401 Dulaney Street, Alexandria, VA, 22314.

6 (703) 872-9306 - please note this is a central facsimile number, and as such, there will be a delay in the delivery of the facsimile to the undersigned, which could be as much as one month.

UNITED STATES PATENT AND TRADEMARK OFFICE

COMMISSIONER FOR PATENTS
UNITED STATES PATENT AND TRADEMARK OFFICE
P.O. BOX 1450
ALEXANDRIA, VA 22313-1450
WWW.USPTO.GOV

Paper No. None

Hanna Albert Awad
Ajaltown
Kesrowan LB LEBANON

COPY MAILED

JUN 0 2 2005

OFFICE OF PETITIONS

In re Application of
Hanna Albert Awad
Application No. 09/886,862
Filed: November 20, 2001
Title: CONCEPTS AND THEIR APPLICATIONS, PUMPS, COMPRESSORS WORKING ON VALVES AND ENGINES WORKING ON THOSE COMPRESSORS

DECISION DISMISSING RENEWED PETITION UNDER 37 C.F.R. §1.137(a)

This is a decision on the renewed petition filed May 19, 2005, pursuant to 37 C.F.R. §1.137(a)[1], to revive the above-identified application.

The above-identified application became abandoned for failure to file an appeal brief within two months of the submission of the Notice of Appeal. On September 24, 2002, a final Office action was mailed. On February 11, 2003, a Notice of Appeal was received, along with the fee associated with the filing of the Notice of Appeal and a two-month extension of time to make timely this response. No appeal brief was received. Pursuant to 37 C.F.R. §1.192[2], the failure to

1 A grantable petition pursuant to 37 CFR §1.137(a) must be accompanied by:

(1) the required reply (in a nonprovisional application abandoned for failure to prosecute, the required reply may be met by the filing of a continuing application; in an application or patent, abandoned or lapsed for failure to pay the issue fee or any portion thereof, the required reply must be the payment of the issue fee or any outstanding balance thereof);
(2) the petition fee;
(3) a showing to the satisfaction of the Commissioner that the entire delay in filing the required reply from the due date for the reply until the filing of a grantable petition pursuant to this paragraph was unavoidable, and;
(4) a terminal disclaimer (and fee as set forth in §1.20(d)) required pursuant to paragraph (d) of this section.

2 37 CFR 1.192. Appellant's brief.

(a) Appellant must, within two months from the date of the notice of appeal under § 1.191 or within the time allowed for reply to the action from which the appeal was taken, if such time is later, file a brief in triplicate. The brief must be accompanied by the fee set forth in § 1.17(c) and must set forth the authorities and arguments on which appellant will rely to maintain the appeal. Any arguments or authorities not included in the brief will be refused consideration by the Board of Patent Appeals and Interferences, unless good cause is shown.

(b) On failure to file the brief, accompanied by the requisite fee, within the time allowed, the appeal shall stand dismissed.

submit an appeal brief within two months from the date of the notice of appeal will result in the abandonment of the application. Accordingly, the above-identified application became abandoned on April 12, 2003. A Notice of Abandonment was mailed November 28, 2003.

The Changes of Correspondence Address, submitted on April 26, 2004 and May 3, 2004, were entered and made of record.

The original petition was submitted on November 1, 2004. On November 17, 2004, a one page statement of facts and an appeal brief were filed. The original petition was dismissed via the mailing of a decision on April 21, 2005, for failure to submit the petition fee.

With the instant petition, petitioner has included the petition fee, a submission which appears to be an appeal brief, and a statement of facts.

It is noted that Petitioner has written "I think I am not entitled to pay even the 250 $ for petition. It must be a petition under 1.181 but Mr. Shanoski told me to pay 250 $" on page 4 of the renewed petition. First, it is noted that both of the petitions Petitioner has filed were filed using the form for submitting a petition under 37 C.F.R. §1.137(a). Petitioner will note the heading "**PETITION FOR REVIVAL OF AN APPLICATION FOR PATENT ABANDONED UNAVOIDABLY UNDER 37 CFR 1.137(a)**" (emphasis included) which appears on each of his submissions. Nowhere in the original petition do the phrases "petition under 37 C.F.R. §1.181" or "petition to withdraw the holding of abandonment" appear.

Secondly, *assuming arguendo*, that the Office should have realized that it was Petitioner's intent to seek the withdrawal of the holding of abandonment, the petition submitted on November 1, 2004 was not timely filed. MPEP 711.03(c) sets forth that a petition to withdraw the holding of abandonment must be filed within two months of the mail date of the notice of abandonment[3]. Since the notice of abandonment was mailed on November 28, 2003, the submission of a petition to withdraw the holding of abandonment pursuant to 37 C.F.R. §1.181 was not possible after January 29, 2004 had passed.

The renewed petition under 37 C.F.R. §1.137(a) lacks items (1) and (3) above.

Regarding the first requirement, Petitioner has failed to submit the required response. Although he has submitted the petition fee along with what appears to be an appeal brief, Petitioner has not submitted the fee associated with the filing of a brief in support of an appeal, which is $250 for a small entity.

As to item (3), the showing of record is not sufficient to establish to the satisfaction of the Commissioner that the delay was unavoidable within the meaning of 37 CFR 1.137(a).

The Commissioner is responsible for determining the standard for unavoidable delay and for applying that standard.

"In the specialized field of patent law, . . . the Commissioner of Patent and Trademarks is primarily responsible for the application and enforcement of the various narrow and technical

3 See also 37 C.F.R. 1.181(f), which states, in part, "Any petition under this part not filed within two months of the mailing date of the action or notice from which relief is requested may be dismissed as untimely, except as otherwise provided. This two-month period is not extendable."

statutory and regulatory provisions. The Commissioner's interpretation of those provisions is entitled to considerable deference."[4]

"[T]he Commissioner's discretion cannot remain wholly uncontrolled, if the facts **clearly** demonstrate that the applicant's delay in prosecuting the application was unavoidable, and that the Commissioner's adverse determination lacked **any** basis in reason or common sense."[5]

"The court's review of a Commissioner's decision is 'limited, however, to a determination of whether the agency finding was arbitrary, capricious, an abuse of discretion, or otherwise not in accordance with the law.'"[6]

"The scope of review under the arbitrary and capricious standard is narrow and a court is not to substitute its judgment for that of the agency."[7]

The standard

"[T]he question of whether an applicant's delay in prosecuting an application was unavoidable must be decided on a case-by-case basis, taking all of the facts and circumstances into account."[8]

The general question asked by the Office is: "Did petitioner act as a reasonable and prudent person in relation to his most important business?"[9]

Nonawareness of a PTO rule will not constitute unavoidable delay[10]

---

4 Rydeen v. Quigg, 748 F.Supp. 900, 904, 16 U.S.P.Q.2d (BNA) 1876 (D.D.C. 1990), aff'd without opinion (Rule 36), 937 F.2d 623 (Fed. Cir.1991) (citing Morganroth v. Quigg, 885 F.2d 843, 848, 12 U.S.P.Q.2d (BNA) 1125 (Fed. Cir. 1989); Ethicon, Inc. v. Quigg 849 F.2d 1422, 7 U.S.P.Q.2d (BNA 1152 (Fed. Cir. 1988) ("an agency's interpretation of a statute it administers is entitled to deference"); see also Chevron U.S.A. Inc. v. Natural Resources Defence Council, Inc., 467 U.S. 837, 844, 81 L. Ed. 694, 104 S. Ct. 2778 (1984) ("if the statute is silent or ambiguous with respect to the specific issue, the question for the court is whether the agency's answer is based on a permissible construction of the statute.")

5 Commissariat A L'Energie Atomique et al. v. Watson, 274 F.2d 594, 597, 124 U.S.P.Q. (BNA) 126 (D.C. Cir. 1960) (emphasis added).

6 Haines v. Quigg, 673 F. Supp. 314, 316, 5 U.S.P.Q.2d (BNA) 1130 (N.D. Ind. 1987) (citing Camp v. Pitts, 411 U.S. 138, 93 S. Ct.1241, 1244 (1973) (citing 5 U.S.C. 706 (2)(A)); Beerly v. Dept. of Treasury, 768 F.2d 942, 945 (7th Cir. 1985); Smith v. Mossinghoff, 217 U.S. App. D.C. 27, 671 F.2d 533, 538 (D.C. Cir.1982)).

7 Ray v. Lehman, 55 F.3d 606, 608, 34 U.S.P.Q2d (BNA) 1786 (Fed. Cir. 1995) (citing Motor Vehicles Mfrs. Ass'n v. State Farm Mut. Auto. Ins. Co., 463 U.S. 29, 43, 77 L.Ed.2d 443, 103 S. Ct. 2856 (1983)).

8 Id.

9 See In re Mattulah, 38 App. D.C. 497 (D.C. Cir. 1912).

10 See Smith v. Mossinghoff, 671 F.2d 533, 538, 213 U.S.P.Q. (BNA) 977 (Fed. Cir. 1982) (citing Potter v. Dann, 201 U.S.P.Q. (BNA) 574 (D.D.C. 1978) for the proposition that counsel's nonawareness of PTO rules does not constitute "unavoidable" delay)). Although court decisions have only addressed the issue of lack of knowledge of an attorney, there is no reason to expect a different result due to lack of knowledge on the part of a pro se (one who prosecutes on his own) applicant. It would be inequitable for a court to determine that a client who spends his hard earned money on an attorney who happens not to know a specific rule should be held to a higher standard than a pro se applicant who makes (or is forced to make) the decision to file the application without the assistance of counsel.

The burden of showing the cause of the delay is on the person seeking to revive the application[11].

A delay caused by an applicant's lack of knowledge or improper application of the patent statute, rules of practice, or the MPEP is not rendered "unavoidable" due to either the applicant's reliance upon oral advice from USPTO employees or the USPTO's failure to advise the applicant to take corrective action[12].

The portion of the CFR and MPEP relevant to the abandonment of this application

37 C.F.R. § § 1.2 Business to be transacted in writing.

All business with the Patent and Trademark Office should be transacted in writing. The personal attendance of applicants or their attorneys or agents at the Patent and Trademark Office is unnecessary. The action of the Patent and Trademark Office will be based exclusively on the written record in the Office. No attention will be paid to any alleged oral promise, stipulation, or understanding in relation to which there is disagreement or doubt.

37 C.F.R. § 1.192 Appellant's brief.

(a) Appellant must, within two months from the date of the notice of appeal under § 1.191 or within the time allowed for reply to the action from which the appeal was taken, if such time is later, file a brief in triplicate. The brief must be accompanied by the fee set forth in § 1.17(c) and must set forth the authorities and arguments on which appellant will rely to maintain the appeal. Any arguments or authorities not included in the brief will be refused consideration by the Board of Patent Appeals and Interferences, unless good cause is shown.
(b) On failure to file the brief, accompanied by the requisite fee, within the time allowed, the appeal shall stand dismissed.

MPEP 1206, Appeal Brief, states, in part:

TIME FOR FILING APPEAL BRIEF

37 CFR 1.192(a) provides 2 months from the date of the notice of appeal for the appellant to file an appeal brief. In an ex parte reexamination proceeding, the time period can be extended only under the provisions of 37 CFR 1.550(c). See also MPEP § 2274.
The usual period of time in which appellant must file his or her brief is 2 months from the date of appeal. The Office date of receipt of the notice of appeal (and not the date indicated on any Certificate of Mailing under 37 CFR 1.8) is the date from which this 2 month time period is measured. See MPEP § 512. However, 37 CFR 1.192(a) alternatively permits the brief to be filed "within the time allowed for reply to the action from which the appeal was taken, if such time is later." These time periods may be extended under 37 CFR 1.136(a), and if 37 CFR 1.136(a) is not available, under 37 CFR 1.136(b) for extraordinary circumstances.

In the event that the appellant finds that he or she is unable to file a brief within the time period allotted by the rules, he or she may file a petition, with fee, to the Technology Center (TC), requesting additional time under 37 CFR 1.136(a). Additional time in excess of 5 months will not be granted unless extraordinary circumstances are involved

---

11 Id.

12 See In re Sivertz, 227 USPQ 255, 256 (Comm'r Pat. 1985).

under 37 CFR 1.136(b). The time extended is added to the calendar day of the original period, as opposed to being added to the day it would have been due when said last day is a Saturday, Sunday, or Federal holiday.

...

Although failure to file the brief within the permissible time will result in dismissal of the appeal, if any claims stand allowed, the application does not become abandoned by the dismissal, but is returned to the examiner for action on the allowed claims. See MPEP § 1215.04. **If there are no allowed claims, the application is abandoned as of the date the brief was due.** Claims which have been objected to as dependent from a rejected claim do not stand allowed. In a reexamination proceeding failure to file the brief will result in the issuance of the certificate under 37 CFR 1.570.

If the time for filing a brief has passed and the application has consequently become abandoned, the applicant may petition to revive the application, as in other cases of abandonment, and to reinstate the appeal; if the appeal is dismissed, but the application is not abandoned, the petition would be to reinstate the claims and the appeal, but a showing equivalent to that in a petition to revive under 37 CFR 1.137 is required. In either event, a proper brief must be filed before the petition will be considered on its merits.

Where the dismissal of the appeal is believed to be in error, filing a petition, pointing out the error, may be sufficient.

A fee under 37 CFR 1.17(c) is required when the brief is filed. 37 CFR 1.192(a) requires the submission of three copies of the appeal brief.

(Emphasis added)

Application of the standard to the current facts and circumstances

As indicated in the Final Rejection, mailed on September 24, 2002, claims 1-2 were pending, and claims 1-2 were rejected. No claims were indicated as being allowed. As such, pursuant to 37 C.F.R. §1.192 and MPEP 1206 reproduced above in part, the application became abandoned on April 12, 2003. In both the original and the renewed petitions, Petitioner has alleged that he sent numerous requests to have his correspondence address changed, and that he wished to "continue the patent even with an appeal[13]." Twenty-one months passed between the filing of the notice of appeal and the submission of the appeal brief. It is not clear how the mailing of a plurality of requests to have his address changed prevented the Petitioner from filing his appeal brief until this time.

With the renewed petition, Petitioner has asserted that a representative with the Patent Assistance center informed him that an appeal brief did not need to be submitted "because they have all the application[14]." It is not clear when Petitioner alleges this conversation to have taken place – was it before of after his submission of the appeal brief on November 17, 2004? Perhaps the discussion allegedly took place after the submission of the appeal brief, and Petitioner is attempting to convey the message that a duplicate copy of the appeal brief was deemed not to have been necessary because a copy was already received on November 17, 2004? Conversely, if Petitioner is alleging that the conversation took place prior to his submission of the appeal brief, and that he was instructed not to file an appeal brief, Petitioner is reminded that a delay that has been caused by an applicant's reliance upon oral advice from USPTO employees is not

13 Original petition, page 6.
14 Renewed petition, page 3.

unavoidable[15]. Furthermore, as set forth in 37 C.F.R. §1.2, no attention will be paid to any alleged oral understanding in relation to which there is disagreement or doubt.

In conclusion, it is not clear what prevented Petitioner from submitting the appeal brief in a timely manner. Petitioner has not established that the entire period of delay was unavoidable. Therefore, this renewed petition is **DISMISSED**.

Any request for reconsideration of this decision must be submitted within **TWO (2) MONTHS** from the mail date of this decision. Extensions of time under 37 CFR 1.136(a) are permitted. The reconsideration request should include a cover letter entitled "Second Renewed Petition under 37 C.F.R. §1.137(a)."

The renewed petition should indicate in a prominent manner that the attorney handling this matter is Paul Shanoski.

Any renewed petition may be submitted by mail[16], hand-delivery[17], or facsimile[18].

The general phone number for the Office of Petitions which should be used for status requests is (571) 272-3282. Telephone inquiries regarding *this decision* should be directed to the undersigned at (571) 272-3225.

Alternate venue

Petitioner may also wish to consider filing a petition under the unintentional standard, 37 CFR §1.137(b)[19]. Petitioner should be made aware that although the surcharge is significantly higher ($750 for a small entity), the standard associated with a petition filed under this section is far less stringent than the standard associated with a delay asserted to be "unavoidable". A form for this petition may be located at http://www.uspto.gov/web/forms/sb0064.pdf

Paul Shanoski
Senior Attorney
Office of Petitions
United States Patent and Trademark Office

15 In re Sivertz, *supra*.

16 Mail Stop Petition, Commissioner for Patents, United States Patent and Trademark Office, P.O. Box 1450, Alexandria, VA, 22313-1450.

17 Customer Window, Randolph Building, 401 Dulaney Street, Alexandria, VA, 22314.

18 (703) 872-9306 - please note this is a central facsimile number, and as such, there will be a delay in the delivery of the facsimile to the undersigned, which could be as much as one month.

19 A grantable petition pursuant to 37 CFR 1.137(b) must be accompanied by:

(1) The reply required to the outstanding Office action or notice, unless previously filed;
(2) The petition fee as set forth in § 1.17(m);
(3) A statement that the entire delay in filing the required reply from the due date for the reply until the filing of a grantable petition pursuant to this paragraph was unintentional. The Commissioner may require additional information where there is a question whether the delay was unintentional, and;
(4) Any terminal disclaimer (and fee as set forth in § 1.20(d)) required pursuant to paragraph (d) of this section.

UNITED STATES PATENT AND TRADEMARK OFFICE

DA-ZZW

COMMISSIONER FOR PATENTS
UNITED STATES PATENT AND TRADEMARK OFFICE
P.O. BOX 1450
ALEXANDRIA, VA 22313-1450
WWW.USPTO.GOV

Courtesy copy

Paper No. None

COPY MAILED

APR 21 2005

OFFICE OF PETITIONS

Hanna Albert Awad
Ajaltown
Kesrowan LB LEBANON

In re Application of
Hanna Albert Awad
Application No. 09/886,862
Filed: November 20, 2001
Title: CONCEPTS AND THEIR APPLICATIONS, PUMPS, COMPRESSORS WORKING ON VALVES AND ENGINES WORKING ON THOSE COMPRESSORS

DECISION DISMISSING PETITION UNDER 37 C.F.R. §1.137(a)

This is a decision on the petition filed November 1, 2004, pursuant to 37 C.F.R. §1.137(a)[1], to revive the above-identified application.

The above-identified application became abandoned for failure to file an appeal brief within two months of the submission of the Notice of Appeal. On September 24, 2002, a final Office action was mailed. On February 11, 2003, a Notice of Appeal was received, along with the fee associated with the filing of the Notice of Appeal and a two-month extension of time to make timely this response. No appeal brief was received. Pursuant to 37 C.F.R. §1.192[2], the failure to

1 A grantable petition pursuant to 37 CFR §1.137(a) must be accompanied by:
(1) the required reply (in a nonprovisional application abandoned for failure to prosecute, the required reply may be met by the filing of a continuing application; in an application or patent, abandoned or lapsed for failure to pay the issue fee or any portion thereof, the required reply must be the payment of the issue fee or any outstanding balance thereof);
(2) the petition fee;
(3) a showing to the satisfaction of the Commissioner that the entire delay in filing the required reply from the due date for the reply until the filing of a grantable petition pursuant to this paragraph was unavoidable, and;
(4) a terminal disclaimer (and fee as set forth in §1.20(d)) required pursuant to paragraph (d) of this section.

2 37 CFR 1.192. Appellant's brief:
(a) Appellant must, within two months from the date of the notice of appeal under § 1.191 or within the time allowed for reply to the action from which the appeal was taken, if such time is later,

RECEIVED
OIPE/IAP
JUL 01 2005

submit an appeal brief within two months from the date of the notice of appeal will result in the abandonment of the application. Accordingly, the above-identified application became abandoned on April 12, 2003. A Notice of Abandonment was mailed November 28, 2003.

The Changes of Correspondence Address, submitted on April 26, 2004 and May 3, 2004, have been entered and made of record.

Petition fee requirement

The fee for filing a petition to revive an unavoidably abandoned application under 37 C.F.R. § 1.137(a) is set forth in 37 C.F.R. §1.17(l) as being $500 for a large entity and $250 for a small entity. Therefore, requirement number (2) has not been met.

The payment of the required petition fee is a prerequisite to the filing of a petition to revive under 37 C.F.R. §1.137. Therefore, consideration of the merits of the petition before receipt of the filing fee would be premature. See M.P.E.P. 711.03(c)(III)(B)[3]

In view of the foregoing, this petition is **DISMISSED**.

Any reply must be submitted within **TWO (2) MONTHS** from the mail date of this decision. Extensions of time under 37 C.F.R. §1.136(a) are permitted. The reply should include a cover letter entitled "Renewed Petition Under 37 C.F.R. 1.137(a)," and should include the petition fee. This is not a final agency action within the meaning of 5 U.S.C 704.

The renewed petition should indicate in a prominent manner that the attorney handling this matter is Paul Shanoski.

To help assure prompt and proper attention to your response, please see Request for Alert Concerning Submitted Petitions, 1282 Official Gazette (May 18, 2004) for further information on how to assist the Office in delivering your submission to the correct location. The Petitioner may wish to consider telephoning the undersigned one month after the submission is made to confirm that the documents were properly delivered.

Any renewed petition may be submitted by mail[4], hand-delivery[5], or facsimile[6].

---

file a brief in triplicate. The brief must be accompanied by the fee set forth in § 1.17(c) and must set forth the authorities and arguments on which appellant will rely to maintain the appeal. Any arguments or authorities not included in the brief will be refused consideration by the Board of Patent Appeals and Interferences, unless good cause is shown.
(b) On failure to file the brief, accompanied by the requisite fee, within the time allowed, the appeal shall stand dismissed.

[3] "...[T]he payment of a petition fee to obtain the revival of an abandoned application is a statutory prerequisite to revival of the abandoned application and cannot be waived. In addition, the phrase '[o]n filing' in 35 U.S.C. §41(a)(7) means that the petition fee is required for the filing (and not merely the grant) of a petition under 37 C.F.R. §1.137. See H.R. Rep. No. 542, 97th Cong., 2nd Sess. 6 (1082), *reprinted in* 1982 U.S.C.C.A.N. 770 ('[t]he fees set forth in this section are due on filing the petition'). Therefore, the Office...will not reach the merits of any petition under 37 C.F.R. §1.137 lacking the requisite petition fee."

4 Mail Stop Petition, Commissioner for Patents, United States Patent and Trademark Office, P.O. Box 1450,

The application file will be retained in the Office of Petitions for two (2) months.

The general phone number for the Office of Petitions which should be used for status requests is (571) 272-3282. Telephone inquiries regarding *this decision* should be directed to the undersigned at (571) 272-3225.

Paul Shanoski
Senior Attorney
Office of Petitions
United States Patent and Trademark Office

Alexandria, VA, 22313-1450.

5 Customer Window, Randolph Building, 401 Dulaney Street, Alexandria, VA, 22314.

6 (703) 872-9306 - please note this is a central facsimile number, and as such, there will be a delay in the delivery of the facsimile to the undersigned, which could be as much as one month.

UNITED STATES PATENT AND TRADEMARK OFFICE

COMMISSIONER FOR PATENTS
UNITED STATES PATENT AND TRADEMARK OFFICE
P.O. BOX 1450
ALEXANDRIA, VA 22313-1450
WWW.USPTO.GOV

Paper No. None

Hanna Albert Awad
Ajaltown
Kesrowan LB LEBANON

COPY MAILED

JUL 28 2005

OFFICE OF PETITIONS

In re Application of Hanna Albert Awad Application No. 09/886,862 Filed: November 20, 2001 Title: CONCEPTS AND THEIR APPLICATIONS, PUMPS, COMPRESSORS WORKING ON VALVES AND ENGINES WORKING ON THOSE COMPRESSORS	DECISION DISMISSING SECOND RENEWED PETITION UNDER 37 C.F.R. §1.137(a)

This is a decision on the second renewed petition filed July 11, 2005, pursuant to 37 C.F.R. §1.137(a)[1], to revive the above-identified application.

The above-identified application became abandoned for failure to file an appeal brief within two months of the submission of the Notice of Appeal. On September 24, 2002, a final Office action was mailed. On February 11, 2003, a Notice of Appeal was received, along with the fee associated with the filing of the Notice of Appeal and a two-month extension of time to make timely this response. No appeal brief was received. Pursuant to 37 C.F.R. §1.192[2], the failure to

1 A grantable petition pursuant to 37 CFR §1.137(a) must be accompanied by:

(1) the required reply (in a nonprovisional application abandoned for failure to prosecute, the required reply may be met by the filing of a continuing application; in an application or patent, abandoned or lapsed for failure to pay the issue fee or any portion thereof, the required reply must be the payment of the issue fee or any outstanding balance thereof);

(2) the petition fee;

(3) a showing to the satisfaction of the Commissioner that the entire delay in filing the required reply from the due date for the reply until the filing of a grantable petition pursuant to this paragraph was unavoidable, and;

(4) a terminal disclaimer (and fee as set forth in §1.20(d)) required pursuant to paragraph (d) of this section.

2 37 CFR 1.192. Appellant's brief.

(a) Appellant must, within two months from the date of the notice of appeal under § 1.191 or within the time allowed for reply to the action from which the appeal was taken, if such time is later, file a brief in triplicate. The brief must be accompanied by the fee set forth in § 1.17(c) and must set forth the authorities and arguments on which appellant will rely to maintain the appeal. Any arguments or authorities not included in the brief will be refused consideration by the Board of Patent Appeals and Interferences, unless good cause is shown.

submit an appeal brief within two months from the date of the notice of appeal will result in the abandonment of the application. Accordingly, the above-identified application became abandoned on April 12, 2003. A Notice of Abandonment was mailed November 28, 2003.

The original petition was submitted on November 1, 2004. On November 17, 2004, a one page statement of facts and an appeal brief were filed. The original petition was dismissed via the mailing of a decision on April 21, 2005, for failure to submit the petition fee.

On May 19, 2005, a renewed petition was submitted, along with the petition fee, a submission which appears to be an appeal brief, and a statement of facts. The renewed petition was dismissed via the mailing of a decision on June 2, 2005. A courtesy copy was re-mailed to Petitioner on July 1, 2005.

With this second renewed petition, Petitioner has set forth "I have sent 10 faxes and three express mails to change my correspondence address nothing has been changed." This is not accurate. As set forth on page 2 of the previous decision: "The Changes of Correspondence Address, submitted on April 26, 2004 and May 3, 2004, were entered and made of record." Furthermore, Petitioner will note that the previous decision was mailed to the same address that appears on both of the requests to change the correspondence address. As such, it is clear that the correspondence address was changed. Perhaps Petitioner placed the wrong address on his requests to change the correspondence address?

With this second renewed petition, Petitioner has also submitted the required response – the $250 fee associated with the filing of a brief in support of an appeal. As such, Petitioner has met requirements (1) and (2) above. Requirement (4) does not apply.

This second renewed petition under 37 C.F.R. §1.137(a) lacks items (3) however. As to item (3), the showing of record is not sufficient to establish to the satisfaction of the Commissioner that the delay was unavoidable within the meaning of 37 CFR 1.137(a).

The Commissioner is responsible for determining the standard for unavoidable delay and for applying that standard.

"In the specialized field of patent law, . . . the Commissioner of Patent and Trademarks is primarily responsible for the application and enforcement of the various narrow and technical statutory and regulatory provisions. The Commissioner's interpretation of those provisions is entitled to considerable deference."[3]

"[T]he Commissioner's discretion cannot remain wholly uncontrolled, if the facts **clearly** demonstrate that the applicant's delay in prosecuting the application was unavoidable,

---

(b) On failure to file the brief, accompanied by the requisite fee, within the time allowed, the appeal shall stand dismissed.

3 Rydeen v. Quigg, 748 F.Supp. 900, 904, 16 U.S.P.Q.2d (BNA) 1876 (D.D.C. 1990), aff'd without opinion (Rule 36), 937 F.2d 623 (Fed. Cir.1991) (citing Morganroth v. Quigg, 885 F.2d 843, 848, 12 U.S.P.Q.2d (BNA) 1125 (Fed. Cir. 1989); Ethicon, Inc. v. Quigg 849 F.2d 1422, 7 U.S.P.Q.2d (BNA 1152 (Fed. Cir. 1988) ("an agency's interpretation of a statute it administers is entitled to deference"); see also Chevron U.S.A. Inc. v. Natural Resources Defence Council, Inc., 467 U.S. 837, 844, 81 L. Ed. 694, 104 S. Ct. 2778 (1984) ("if the statute is silent or ambiguous with respect to the specific issue, the question for the court is whether the agency's answer is based on a permissible construction of the statute.")

and that the Commissioner's adverse determination lacked **any** basis in reason or common sense."[4]

"The court's review of a Commissioner's decision is 'limited, however, to a determination of whether the agency finding was arbitrary, capricious, an abuse of discretion, or otherwise not in accordance with the law.'"[5]
"The scope of review under the arbitrary and capricious standard is narrow and a court is not to substitute its judgment for that of the agency."[6]

The standard

"[T]he question of whether an applicant's delay in prosecuting an application was unavoidable must be decided on a case-by-case basis, taking all of the facts and circumstances into account."[7]

The general question asked by the Office is: "Did petitioner act as a reasonable and prudent person in relation to his most important business?"[8]

Nonawareness of a PTO rule will not constitute unavoidable delay[9]
The burden of showing the cause of the delay is on the person seeking to revive the application[10].

A delay caused by an applicant's lack of knowledge or improper application of the patent statute, rules of practice, or the MPEP is not rendered "unavoidable" due to either the applicant's reliance upon oral advice from USPTO employees or the USPTO's failure to advise the applicant to take corrective action[11].

---

4 Commissariat A L'Energie Atomique et al. v. Watson, 274 F.2d 594, 597, 124 U.S.P.Q. (BNA) 126 (D.C. Cir. 1960) (emphasis added).

5 Haines v. Quigg, 673 F. Supp. 314, 316, 5 U.S.P.Q.2d (BNA) 1130 (N.D. Ind. 1987) (citing Camp v. Pitts, 411 U.S. 138, 93 S. Ct.1241, 1244 (1973) (citing 5 U.S.C. 706 (2)(A)); Beerly v. Dept. of Treasury, 768 F.2d 942, 945 (7th Cir. 1985); Smith v. Mossinghoff, 217 U.S. App. D.C. 27, 671 F.2d 533, 538 (D.C. Cir.1982)).

6 Ray v. Lehman, 55 F.3d 606, 608, 34 U.S.P.Q2d (BNA) 1786 (Fed. Cir. 1995) (citing Motor Vehicles Mfrs. Ass'n v. State Farm Mut. Auto. Ins. Co., 463 U.S. 29, 43, 77 L.Ed.2d 443, 103 S. Ct. 2856 (1983)).

7 Id.

8 See In re Mattulah, 38 App. D.C. 497 (D.C. Cir. 1912).

9 See Smith v. Mossinghoff, 671 F.2d 533, 538, 213 U.S.P.Q. (BNA) 977 (Fed. Cir. 1982) (citing Potter v. Dann, 201 U.S.P.Q. (BNA) 574 (D.D.C. 1978) for the proposition that counsel's nonawareness of PTO rules does not constitute "unavoidable" delay)). Although court decisions have only addressed the issue of lack of knowledge of an attorney, there is no reason to expect a different result due to lack of knowledge on the part of a pro se (one who prosecutes on his own) applicant. It would be inequitable for a court to determine that a client who spends his hard earned money on an attorney who happens not to know a specific rule should be held to a higher standard than a pro se applicant who makes (or is forced to make) the decision to file the application without the assistance of counsel.

10 Id.

11 See In re Sivertz, 227 USPQ 255, 256 (Comm'r Pat. 1985).

The portions of the CFR and MPEP relevant to the abandonment of this application

37 C.F.R. § § 1.2 Business to be transacted in writing.

All business with the Patent and Trademark Office should be transacted in writing. The personal attendance of applicants or their attorneys or agents at the Patent and Trademark Office is unnecessary. The action of the Patent and Trademark Office will be based exclusively on the written record in the Office. No attention will be paid to any alleged oral promise, stipulation, or understanding in relation to which there is disagreement or doubt.

37 C.F.R. § 1.192 Appellant's brief.

(a) Appellant must, within two months from the date of the notice of appeal under § 1.191 or within the time allowed for reply to the action from which the appeal was taken, if such time is later, file a brief in triplicate. The brief must be accompanied by the fee set forth in § 1.17(c) and must set forth the authorities and arguments on which appellant will rely to maintain the appeal. Any arguments or authorities not included in the brief will be refused consideration by the Board of Patent Appeals and Interferences, unless good cause is shown.
(b) On failure to file the brief, accompanied by the requisite fee, within the time allowed, the appeal shall stand dismissed.

MPEP 1206, Appeal Brief, states, in part:

TIME FOR FILING APPEAL BRIEF

37 CFR 1.192(a) provides 2 months from the date of the notice of appeal for the appellant to file an appeal brief. In an ex parte reexamination proceeding, the time period can be extended only under the provisions of 37 CFR 1.550(c). See also MPEP § 2274.
The usual period of time in which appellant must file his or her brief is 2 months from the date of appeal. The Office date of receipt of the notice of appeal (and not the date indicated on any Certificate of Mailing under 37 CFR 1.8) is the date from which this 2 month time period is measured. See MPEP § 512. However, 37 CFR 1.192(a) alternatively permits the brief to be filed "within the time allowed for reply to the action from which the appeal was taken, if such time is later." These time periods may be extended under 37 CFR 1.136(a), and if 37 CFR 1.136(a) is not available, under 37 CFR 1.136(b) for extraordinary circumstances.

In the event that the appellant finds that he or she is unable to file a brief within the time period allotted by the rules, he or she may file a petition, with fee, to the Technology Center (TC), requesting additional time under 37 CFR 1.136(a). Additional time in excess of 5 months will not be granted unless extraordinary circumstances are involved under 37 CFR 1.136(b). The time extended is added to the calendar day of the original period, as opposed to being added to the day it would have been due when said last day is a Saturday, Sunday, or Federal holiday.

...

Although failure to file the brief within the permissible time will result in dismissal of the appeal, if any claims stand allowed, the application does not become abandoned by the dismissal, but is returned to the examiner for action on the allowed claims. See MPEP § 1215.04. **If there are no allowed claims, the application is abandoned as of the date the brief was due.** (Emphasis added). Claims which have been objected to as dependent from a rejected claim do not stand allowed. In a reexamination proceeding failure to file the brief will result in the issuance of the certificate under 37 CFR 1.570.

If the time for filing a brief has passed and the application has consequently become abandoned, the applicant may petition to revive the application, as in other cases of abandonment, and to reinstate the appeal; if the appeal is dismissed, but the application is not abandoned, the petition would be to reinstate the claims and the appeal, but a showing equivalent to that in a petition to revive under 37 CFR 1.137 is required. In either event, a proper brief must be filed before the petition will be considered on its merits.

Where the dismissal of the appeal is believed to be in error, filing a petition, pointing out the error, may be sufficient.

A fee under 37 CFR 1.17(c) is required when the brief is filed. 37 CFR 1.192(a) requires the submission of three copies of the appeal brief.

Application of the standard to the current facts and circumstances

The decision on the renewed petition set forth the following:

As indicated in the Final Rejection, mailed on September 24, 2002, claims 1-2 were pending, and claims 1-2 were rejected. No claims were indicated as being allowed. As such, pursuant to 37 C.F.R. §1.192 and MPEP 1206 reproduced above in part, the application became abandoned on April 12, 2003. In both the original and the renewed petitions, Petitioner has alleged that he sent numerous requests to have his correspondence address changed, and that he wished to "continue the patent even with an appeal[12]." Twenty-one months passed between the filing of the notice of appeal and the submission of the appeal brief. It is not clear how the mailing of a plurality of requests to have his address changed prevented the Petitioner from filing his appeal brief until this time.

With the renewed petition, Petitioner has asserted that a representative with the Patent Assistance center informed him that an appeal brief did not need to be submitted "because they have all the application[13]." It is not clear when Petitioner alleges this conversation to have taken place – was it before of after his submission of the appeal brief on November 17, 2004? Perhaps the discussion allegedly took place after the submission of the appeal brief, and Petitioner is attempting to convey the message that a duplicate copy of the appeal brief was deemed not to have been necessary because a copy was already received on November 17, 2004? Conversely, if Petitioner is alleging that the conversation took place prior to his submission of the appeal brief, and that he was instructed not to file an appeal brief, Petitioner is reminded that a delay that has been caused by an applicant's reliance upon oral advice from USPTO employees is not unavoidable[14]. Furthermore, as set forth in 37 C.F.R. §1.2, no attention will be paid to any alleged oral understanding in relation to which there is disagreement or doubt.

In conclusion, it is not clear what prevented Petitioner from submitting the appeal brief in a timely manner.

With this second renewed petition, Petitioner has set forth "I did not file the hole appeal because I called the patent assistant <u>before the filing</u> (emphasis added) and they told me "they have the hole application" all you need is an appeal fee."

As set forth in the decision on the renewed petition, in the portion reproduced immediately above, a delay that has been caused by an applicant's reliance upon oral advice from USPTO employees cannot give rise to an unavoidable delay. Furthermore, as set forth in 37 C.F.R. §1.2 reproduced above, no attention will be paid to any alleged oral understanding in relation to which there is disagreement or doubt.

Petitioner has not established that the entire period of delay was unavoidable. Therefore, this renewed petition is **DISMISSED**.

---

12 Original petition, page 6.
13 Renewed petition, page 3.
14 <u>In re Sivertz</u>, *supra*.

The general phone number for the Office of Petitions which should be used for status requests is (571) 272-3282. Telephone inquiries regarding *this decision* should be directed to the undersigned at (571) 272-3225.

Petitioner's only relief is a petition under 37 C.F.R. §1.137(b), and - having been made aware of this reality – Petitioner's delay in promptly seeking relief under 37 C.F.R. §1.137(b) may be considered evidence of intentional delay and an absolute bar to revival.

NOTICE:

Any request for reconsideration of this decision under 37 C.F.R. §1.137(a) must be submitted within **TWO (2) MONTHS** from the mail date of this decision. Extensions of time under 37 C.F.R. §1.136(a) are permitted. Failure to respond will result in abandonment of the application. The request for reconsideration should include a cover letter entitled "Third Renewed Petition under 37 C.F.R. §1.137(a)," and should only address the deficiencies noted in this decision.

Thereafter, there will be no further reconsideration of this matter[15]. If, on third renewed petition, Petitioner fails to satisfy the showings burden required: (a) the resulting decision may be one viewed as final agency action; and (b) provisions for reconsideration, such as those at 37 C.F.R. §1.137(e), will **not** apply to that decision.

Any response should indicate in a prominent manner that the attorney handling this matter is Paul Shanoski, and may be submitted by mail[16], hand-delivery[17], or facsimile[18].

Paul Shanoski
Senior Attorney
Office of Petitions
United States Patent and Trademark Office

---

[15] For more than a century, punctuality and due diligence, equally with good faith, have been deemed essential requisites to the success of those who seek to obtain the special privileges of the patent law, and they are demanded in the interest of the public and for the protection of rival inventors. See: Porter v. Louden, 7 App.D.C. 64 (C.A.D.C. 1895), citing Wollensak v. Sargent, 151 U.S. 221, 228, 38 L. Ed. 137, 14 S. Ct. 291 (1894). An invention benefits no one unless it is made public, and the rule of diligence should be so applied as to encourage reasonable promptness in conferring this benefit upon the public. Automatic Electric Co. v. Dyson, 52 App. D.C. 82; 281 F. 586 (C.A.D.C. 1922). Generally, 35 U.S.C. §6; 37 C.F.R.§§1.181, 182, 183.

16 Mail Stop Petition, Commissioner for Patents, United States Patent and Trademark Office, P.O. Box 1450, Alexandria, VA, 22313-1450.

17 Customer Window, Randolph Building, 401 Dulaney Street, Alexandria, VA, 22314.

18 (703) 872-9306 - please note this is a central facsimile number, and as such, there will be a delay in the delivery of the facsimile to the undersigned, which could be as much as one month.

UNITED STATES PATENT AND TRADEMARK OFFICE

Commissioner for Patents
United States Patent and Trademark Office
P.O. Box 1450
Alexandria, VA 22313-1450
www.uspto.gov

WELSH & KATZ, LTD
120 S RIVERSIDE PLAZA
22ND FLOOR
CHICAGO, IL 60606

COPY MAILED

DEC 10 2007

OFFICE OF PETITIONS

In re Application of :
Ken Ikka :
Application No. 09/886,866 :
Filed: June 21, 2001 :
Attorney Docket No. 7104/94433 :

ON PETITION

This is a decision on the petition under 37 CFR 1.137(b), filed on December 26, 2006, to revive the above-identified application.

The above application became abandoned for failure to file a proper reply to the final Office action mailed July 19, 2005. A Notice of Abandonment was mailed on April 10, 2006.

37 CFR 1.137(b)(3) requires a statement that the entire delay in filing the required reply from the due date for the reply until the filing of a grantable petition pursuant to 37 CFR 1.137(b) was unintentional. Since the statement contained in the instant petition varies from the language required by 37 CFR 1.137(b)(3), the statement is being construed as the statement required by 37 CFR 1.137(b)(3) and petitioner must notify the Office if this is **not** a correct interpretation of the statement.

The petition satisfies the requirements of 37 CFR 1.137(b), in that, petitioner has supplied (1) the reply in the form of a Request for Continued Examination (RCE) under 37 CFR 1.114, with the $790 filing fee; (2) the petition fee of $1,500; and (3) an adequate statement of unintentional delay. Therefore, the petition is **GRANTED**.

This application is being revived for consideration of the RCE filed on January 19, 2006.

The application file is being referred to Technology Center Art Unit 1762, for further processing.

Telephone inquiries concerning this decision should be directed to the undersigned at (571) 272-3226.

Andrea Smith
Petitions Examiner
Office of Petitions

UNITED STATES PATENT AND TRADEMARK OFFICE

Commissioner for Patents
United States Patent and Trademark Office
P.O. Box 1450
Alexandria, VA 22313-1450
www.uspto.gov

RYAN, MASON & LEWIS, LLP
90 FOREST AVENUE
LOCUST VALLEY, NY 11560

COPY MAILED
DEC 20 2005
OFFICE OF PETITIONS

In re Application of

Hackbarth, et al. :

Application No. 09/886,876

: DECISION ON PETITION

Filed: June 21, 2001

:

Attorney Docket No. 2-3-12

This is a decision on the petition under 37 CFR 1.137(b), filed September 23, 2005, to revive the above-identified application.

The petition is **GRANTED**.

The above-cited application became abandoned for failure to reply in a timely manner to the non-final Office action mailed January 13, 2005, which set a shortened statutory period for reply of three (3) months from its mailing date. No extension of time pursuant to 37 CFR 1.136(a) was obtained within the allowable period. Accordingly, the application became abandoned on April 14, 2005.

The amendment filed September 23, 2005, is noted and made of record.

The request for an extension of time filed September 23, 2005, is noted, however; the request was made outside the maximum statutory period set for reply and cannot be granted. The amount of $2,160.00 will be refunded, in due course.

The application is being forwarded to Technology Center 2100, GAU 2174 for further processing.

Telephone inquiries concerning this decision should be directed to the undersigned at (571) 272-3222.

Kenya A. McLaughlin

Kenya A. McLaughlin
Petitions Attorney
Office of Petitions

UNITED STATES PATENT AND TRADEMARK OFFICE

Commissioner for Patents
United States Patent and Trademark Office
P.O. Box 1450
Alexandria, VA 22313-1450
www.uspto.gov

Marc D. Machtinger
Law Office of Marc D. Machtinger, Ltd.
750 W. Lake Cook Road, Suite 350
Buffalo Grove, IL 60089

COPY MAILED

JUN 0 1 2007

OFFICE OF PETITIONS

In re Application of:
Grant H. McGibney
Application No.: 09/886,885
Filed: June 21, 2001
Atty's Docket No.: 266 P004

DECISION ON PETITION UNDER
37 CFR 1.137(b)

This is a decision on the petition for revival of the above-entitled application under 37 CFR 1.137(b), filed November 22, 2006.

The petition is **DISMISSED**.

Any request for reconsideration of this decision must be submitted within **TWO (2) MONTHS** from the mail date of this decision. Extensions of time under 37 CFR 1.136(a) are permitted. The reconsideration request should include a cover letter entitled "Renewed Petition Under 37 CFR 1.137(b)."

The above-identified application became abandoned for failure to submit corrected drawings in a timely manner in reply to the Notice Of Allowance mailed October 21, 2005, which set a statutory period for reply of three (3) months. Accordingly, the above-identified application became abandoned at midnight on January 21, 2006.

On November 22, 2006, applicant filed the petition for revival under 37 CFR 1.137(b) considered herein.

A petition under 37 CFR 1.137(b) requesting that the application be revived on the grounds of unintentional abandonment must be accompanied by (1) the required reply, (2) the petition fee required by law, (3) a statement that the, "entire delay in filing the required reply from the due date for the reply until the filing of a grantable petition pursuant to this paragraph was unintentional" and (4) any terminal disclaimer and fee pursuant to 37 CFR 1.137(c) (where required).

The instant petition does not satisfy requirements (1). Specifically, while applicant has filed an amendment with corrected drawings, the drawings have been objected to by the Draftsperson under 37 CFR 1.84 or 1.152. A copy of the "Notice of Draftperson's Patent Drawing Review" (Form PTO-948) is enclosed.

Further correspondence with respect to this matter should be addressed as follows:

By mail: Mail Stop PETITIONS
Commissioner for Patents
Post Office Box 1450
Alexandria, VA 22313-1450

By hand: Customer Service Window
Mail Stop Petitions
Randolph Building
401 Dulany Street
Alexandria, VA 22314

By fax: (703) 872-9306
ATTN: Office of Petitions

This application remains **ABANDONED**.

Telephone inquiries concerning this decision should be directed to the undersigned.

Derek A. Putonen
Attorney Advisor
(571) 272-3294

Encl: Form PTO-948

UNITED STATES PATENT AND TRADEMARK OFFICE

Commissioner for Patents
United States Patent and Trademark Office
P.O. Box 1450
Alexandria, VA 22313-1450
www.uspto.gov

Marc D. Machtinger
Law Office of Marc D. Machtinger, Ltd.
750 W. Lake Cook Road, Suite 350
Buffalo Grove, IL 60089

COPY MAILED

DEC 03 2007

OFFICE OF PETITIONS

In re Application of:
Grant H. McGibney
Application No.: 09/886,885
Filed: June 21, 2001
Atty's Docket No.: 266 P004

DECISION ON RENEWED PETITION UNDER 1.137(b)

This is a decision on the renewed petition for revival of the above-entitled application under 37 CFR 1.137(b), filed June 22, 2007.

The renewed petition is **GRANTED**.

The above-identified application became abandoned for failure to submit corrected drawings in a timely manner in reply to the Notice of Allowance mailed October 21, 2005, which set a period for reply of three (3) months. (See Decision mailed June 01, 2007 dismissing applicant's original petition to revive).

On June 22, 2007, applicant filed the present renewed petition for revival under 37 CFR 1.137(b) considered herein. The petition satisfies the conditions for revival pursuant to the provisions of 37 CFR 1.137(b) in that it includes: (1) the petition fee; (2) the required statement of unintentional delay; and (3) the required reply in the form of corrected drawings. Accordingly, the corrected drawings are accepted as having been unintentionally delayed.

The application is being referred to the Office Of Publications.

Telephone inquiries concerning this decision should be directed to the undersigned.

Derek A. Putonen
Attorney Advisor
(571) 272-3294

UNITED STATES PATENT AND TRADEMARK OFFICE

Commissioner for Patents
United States Patent and Trademark Office
P.O. Box 1450
Alexandria, VA 22313-1450
www.uspto.gov

WELSH & KATZ, LTD
120 S RIVERSIDE PLAZA
22ND FLOOR
CHICAGO, IL 60606

COPY MAILED
DEC 10 2007
OFFICE OF PETITIONS

In re Application of	:	
Ken Ikka	:	
Application No. 09/886,866	:	ON PETITION
Filed: June 21, 2001	:	
Attorney Docket No. 7104/94433	:	

This is a decision on the petition under 37 CFR 1.137(b), filed on December 26, 2006, to revive the above-identified application.

The above application became abandoned for failure to file a proper reply to the final Office action mailed July 19, 2005. A Notice of Abandonment was mailed on April 10, 2006.

37 CFR 1.137(b)(3) requires a statement that the entire delay in filing the required reply from the due date for the reply until the filing of a grantable petition pursuant to 37 CFR 1.137(b) was unintentional. Since the statement contained in the instant petition varies from the language required by 37 CFR 1.137(b)(3), the statement is being construed as the statement required by 37 CFR 1.137(b)(3) and petitioner must notify the Office if this is **not** a correct interpretation of the statement.

The petition satisfies the requirements of 37 CFR 1.137(b), in that, petitioner has supplied (1) the reply in the form of a Request for Continued Examination (RCE) under 37 CFR 1.114, with the $790 filing fee; (2) the petition fee of $1,500; and (3) an adequate statement of unintentional delay. Therefore, the petition is **GRANTED**.

This application is being revived for consideration of the RCE filed on January 19, 2006.

The application file is being referred to Technology Center Art Unit 1762, for further processing.

Telephone inquiries concerning this decision should be directed to the undersigned at (571) 272-3226.

Andrea Smith
Petitions Examiner
Office of Petitions

UNITED STATES PATENT AND TRADEMARK OFFICE

COMMISSIONER FOR PATENTS
UNITED STATES PATENT AND TRADEMARK OFFICE
P.O. BOX 1450
ALEXANDRIA, VA 22313-1450
www.uspto.gov

BC
Paper Number __

Mailed:

In re application of
John J. Curro et al.
Serial No. 09/886,828
Filed: June 21, 2001
For: APPLICATIONS FOR LAMINATE WEB

: DECISION ON
: PETITION

DECISION

This is a decision on the PETITION, filed on November 4, 2003, requesting entry and consideration of Applicants' enclosed copy of a substitute photograph encompassing Figures 1 and 2. It is stated that the original photograph was erroneously submitted to the Office on October 29, 2003 as an attachment to John Curro's Declaration under 37 C.F.R. 1.132. The instant PETITION appears to contain only a request to the examiner for substitution of the enclosed photograph. Accordingly, there does not appear to be a petitionable issue detailed in the PETITION. Specifically, the request does not pertain to a specific "action or requirement" made by the examiner in the *ex parte* prosecution of the application, as required by a PETITION filed under 37 C.F.R. 1.181. Moreover, there does not appear to be an intention on considering the PETITION under 37 C.F.R. 1.59 to expunge papers from the patent application file, since none of the requirements under 37 C.F.R. 1.59 have been fulfilled. Thus, this PETITION is being forwarded to the examiner to treat the merits of the PETITION as a request.

Accordingly, this PETITION is **dismissed**.

JMStone

Jacqueline Stone, Director
Technology Center 1700
Chemical and Materials Engineering

Angela M. Stone
The Procter & Gamble Company
Intellectual Property Division
Winton Hill Technical Center – Box 161
6110 Center Hill Avenue
Cincinnati, OH 45224

UNITED STATES PATENT AND TRADEMARK OFFICE

COMMISSIONER FOR PATENTS
UNITED STATES PATENT AND TRADEMARK OFFICE
WASHINGTON, D.C. 20231
www.uspto.gov

Paper No. 6

I C I SEEDS
2369 330TH ST.
SLATER, IA 50244

COPY MAILED

MAR 2 6 2003

OFFICE OF PETITIONS

In re Application of :
Bullock, et al. :
Application No. 09/886,937 : ON PETITION
Filed: June 21, 2001 :
Attorney Docket No. 031-3 :

This is a decision on the petition under 37 CFR 1.137(b), filed January 24, 2003, to revive the above-identified application.

The petition is **GRANTED**.

The above-identified application became abandoned for failure to reply in a timely manner to the Notice to File Missing Parts of Application (Notice) mailed August 15, 2001. The Notice set a period for reply of two (2) months from the mail date of the Notice. No extensions of time under the provisions of 37 CFR 1.136(a) were obtained. Accordingly, the above-identified application became abandoned on October 16, 2001.

The file is being forwarded to the Office of Initial Patent Examination for further processing.

Telephone inquiries concerning this matter may be directed to the undersigned at (703) 306-9200.

Edward J. Tannouse
Petitions Attorney
Office of Petitions
United States Patent and Trademark Office

UNITED STATES PATENT AND TRADEMARK OFFICE

Commissioner for Patents
United States Patent and Trademark Office
P.O. Box 1450
Alexandria, VA 22313-1450
www.uspto.gov

PETER I. LIPPMAN
17900 MOCKINGBIRD DRIVE
RENO NV 89508

COPY MAILED

APR 2 2 2009

OFFICE OF PETITIONS

In re Application of	:	
Algirdas Avizienis	:	
Application No. 09/886,959	:	ON PETITION
Filing: June 20, 2001	:	
Attorney Docket No. xAAA-02	:	

This is a decision on the petition under 37 CFR 1.102(c)(1), filed March 26, 2009, to make the above-identified application special based on applicant's age as set forth in M.P.E.P. § 708.02, Section IV.

The petition is **GRANTED**.

A grantable petition to make an application special under 37 CFR 1.102(c)(1) and MPEP § 708.02, Section IV: Applicant's Age must be accompanied by evidence showing that at least one of the applicants is 65 years of age, or more, such as a birth certificate or a statement by applicant. No fee is required.

The instant petition includes a statement (PTO/SB/130 form) by the applicant that he is 65 years of age. Accordingly, the above-identified application has been accorded "special" status.

Telephone inquiries concerning this decision should be directed to the undersigned at 571-272-7751. All other inquiries concerning either the examination or status of the application should be directed to the Technology Center.

This matter is being referred to the Board of Appeals for action on the merits commensurate with this decision.

Joan Olszewski

Joan Olszewski
Petitions Examiner
Office of Petitions

UNITED STATES PATENT AND TRADEMARK OFFICE

COMMISSIONER FOR PATENTS
UNITED STATES PATENT AND TRADEMARK OFFICE
P.O. BOX 1450
ALEXANDRIA, VA 22313-1450
www.uspto.gov

Paper No. 5

Paul J. Skwierawski
ANTONELLI, TERRY, STOUT &
KRAUS, LLP
1300 North Seventeenth Street, Suite 1800
Arlington, VA 22209

MAILED

NOV 2 6 2003

Technology Center 2100

In re Application of:
Boom
Application No.: 09/886,975
Filed: June 25, 2001
For: SYSTEM, METHOD AND COMPUTER PROGRAM FOR THE DETECTION AND RESTRICTION OF THE NETWORK ACTIVITY OF DENIAL OF SERVICE ATTACK SOFTWARE

DECISION ON REQUEST FOR WITHDRAWAL AS ATTORNEY

This is a decision on the Request For Withdrawal As Attorney Under 37 CFR § 1. 36 and 10.40(c) filed September 25, 2003.

A Power Of Attorney Under 37 CFR § 1. 36 was filed on October 20, 2003. The Power Of Attorney revoked all prior Powers Of Attorney and appointed KENYON & KENYON as the attorneys of record of the instant application. The Power Of Attorney of October 20, 2003 was accepted. Accordingly, all communications from the U.S. Patent and Trademark Office to applicant are to be conducted by KENYON & KENYON.

For the above stated reasons, the request is DISMISSED AS MOOT.

No further communication to you regarding this application will be made.

James R. Matthews

701 Vincent N. Trans
Special Program Examiner
Technology Center 2100
Computer Architecture and Software
(703) 305-9750

cc: Shawn W. O'Dowd
KENYON & KENYON
1500 K Street, N.W.
Washington, DC 20005

UNITED STATES PATENT AND TRADEMARK OFFICE

COMMISSIONER FOR PATENTS
UNITED STATES PATENT AND TRADEMARK OFFICE
P.O. BOX 1450
ALEXANDRIA, VA 22313-1450
www.uspto.gov

MAILED

FEB - 9 2005

DIRECTOR'S OFFICE
TECHNOLOGY CENTER 2600

ANTONELLI, TERRY, STOUT & KRAUS, LLP
1300 NORTH SEVENTEENTH STREET
SUITE 1800
ARLINGTON VA 22209-9889

In re Application of :
Akira Yoshikawa, et al. :
Application No. 09/886,976 : DECISION ON PETITION TO
Filed: June 25, 2001 : MAKE SPECIAL
For: **INVESTIGATION DEVICE AND INVESTIGATION METHOD**

This is a decision on the petition filed December 3, 2004 under Manual of Patent Examination Procedure §708.02, VIII requesting accelerated examination.

The petition under Manual of Patent Examination Procedure §708.02, VIII, must:
(1) be filed prior to receiving any examination by the examiner,
(2) be accompanied by the required fee- $130,
(3) the claims should be directed to a single invention (if it is determined that the claims pertain to more than one invention, then applicant will have to make an election without traverse or forfeit accelerated examination status),
(4) state that a pre-examination search was made, and fully discuss the search method employed, such as classes and subclasses searched, publications, Chemical abstracts, patents, etc. A search made by a foreign patent office satisfies this requirement,
(5) be accompanied by a copy of each of the references most closely related to the subject matter encompassed by the claims if said references are not already of record,
(6) fully discuss the references, pointing out with the particularity required by 37 C.F.R. §1.111 (b) and (c), how the claimed subject matter is patentable over the references.

The petition does not fulfill the requirement in item (1) in that a non-final Office action was mailed on July 14, 2004. Thus, the subject petition was filed after receiving an examination by the examiner.

For the above stated reasons, the petition is **DENIED**.

Dwayne Bost
Special Program Examiner
Technology Center 2600
Communications

UNITED STATES PATENT AND TRADEMARK OFFICE

Commissioner for Patents
United States Patent and Trademark Office
P.O. Box 1450
Alexandria, VA 22313-1450
www.uspto.gov

Paper No. 12

Blank Rome
600 New Hampshire Avenue, NW
Washington, DC 20037

COPY MAILED

JAN 0 8 2004

OFFICE OF PETITIONS

In re Application of :
Jacob Malkin et al. :
Application No. 09/886,979 :
Filed: January 15, 2002 :
Attorney Docket No. 109289.00193 :

ON PETITION

This is a decision on the petition under 37 CFR 1.137(b), filed December 31, 2003, to revive the above-identified application.

The petition is granted.

The above-identified application became abandoned for failure to reply within the meaning of 37 CFR 1.113 in a timely manner in reply to the final Office action mailed September 25, 2002, which set a shortened statutory period for reply of three months from the mail date of the Notice. No extensions of time under the provisions of 37 CFR 1.136 were obtained. Accordingly, the above-identified application became abandoned on December 26, 2002.

The two-month period for filing an appeal brief in triplicate (accompanied by the fee required by 37 CFR 1.17(c)), runs from the date of this decision.

The application file is being forwarded to Technology Center AU 1756.

Telephone inquiries concerning this decision should be directed to Latrice Bond at (703) 308-6911.

Latrice Bond
Petitions Examiner
Office of Petitions
Office of the Deputy Commissioner
for Patent Examination Policy

UNITED STATES PATENT AND TRADEMARK OFFICE

Commissioner for Patents
United States Patent and Trademark Office
P.O. Box 1450
Alexandria, VA 22313-1450
www.uspto.gov

OBLON SPIVAK MCCLELLAND MAIER & NEUSTADT, P.C.
1940 DUKE STREET
ALEXANDRIA, VA 22314

COPY MAILED

FEB 15 2006

OFFICE OF PETITIONS

In re Application of	:	
Jaime Fuster Rufilanchas et al	:	
Application No. 09/887,001	:	DECISION ON PETITION
Filed: June 25, 2001	:	TO WITHDRAW
Attorney Docket No. 210331US2	:	FROM RECORD

This is a decision on the Request to Withdraw as attorney or agent of record under 37 C.F.R. § 1.36(b), filed November 23, 2005.

The request is **NOT APPROVED**.

A grantable request to withdraw as attorney/agent of record must be signed by every attorney/agent seeking to withdraw or contain a clear indication that one attorney is signing on behalf of another/others. A request to withdraw will not be approved unless at least 30 (thirty) days would remain between the date of approval and the later of the expiration date of a time to file a response or the expiration date of the maximum time period which can be extended under 37 C.F.R. § 1.136(a).

The request cannot be approved because there must be at least 30 days between approval of the withdrawal and the later of the expiration date of a time period for reply or the expiration date of the period which can be obtained by a petition and fee for extension of time under 37 CFR 1.136(a).

All future communications from the Office will continue to be directed to the above-listed address until otherwise notified by applicants.

Telephone inquiries concerning this decision should be directed to Wan Laymon at 571-272-3220.

Dean Potter for

Amelia Au
Petitions Examiner
Office of Petitions

UNITED STATES PATENT AND TRADEMARK OFFICE

COMMISSIONER FOR PATENTS
UNITED STATES PATENT AND TRADEMARK OFFICE
P.O. BOX 1450
ALEXANDRIA, VA 22313-1450
www.uspto.gov

Paper No. 7

MEI-LI CHUANG CHIEN
MIN-CHIH CHUANG & MIN-JAN CHUANG
P. O. BOX NO. 6-57
CHUNG-HO CITY
TAIPEI HSIEN, 235 TW TAIWAN

COPY MAILED

MAR 0 8 2004

OFFICE OF PETITIONS

In re Application of	:	
Mei-Li Chuang Chien, et al.	:	
Application No. 09/887, 044	:	ON PETITION
Filed: June 25, 2001	:	
Attorney Docket No. N/A	:	

This is a decision on the renewed petition under 37 CFR 1.137(b), filed February 24, 2004, to revive the above-identified application.

The petition is **GRANTED.**

The above-identified application became abandoned for failure to reply in a timely manner to the Notice to File Corrected Application Papers mailed September 10, 2001. The Notice set a period for reply of two (2) months from the mail date of the Notice. No extensions of time under the provisions of 37 CFR 1.136(a) were obtained. Accordingly, the above-identified application became abandoned on November 11, 2001.

Telephone inquiries concerning this decision should be directed to the undersigned at (703) 306-5594.

The application file is being forwarded to the Office of Initial Patent Examination for further processing.

Retta Williams

Retta Williams
Petitions Examiner
Office of Petitions
Office of the Deputy Commissioner
for Patent Examination Policy

UNITED STATES PATENT AND TRADEMARK OFFICE

COMMISSIONER FOR PATENTS
UNITED STATES PATENT AND TRADEMARK OFFICE
P.O. BOX 1450
ALEXANDRIA, VA 22313-1450
www.uspto.gov

Paper No. 5

MEI-LI CHUANG CHIEN
MIN-CHIH CHUANG & MIN-JAN CHUANG
P. O. BOX NO. 6-57
CHUNG-HO CITY
TAIPEI HSIEN, 235 TW TAIWAN

COPY MAILED

JAN 06 2004

OFFICE OF PETITIONS

In re Application of
Mei-Li Chuang Chien, et al.
Application No. 09/887, 044
Filed: June 25, 2001
Attorney Docket No. N/A

ON PETITION

This is a decision on the petition under 37 CFR 1.137(b), filed December 11, 2003, to revive the above-identified application.

The petition is **DISMISSED**.

Any request for reconsideration of this decision must be submitted within TWO (2) MONTHS from the mail date of this decision. Extensions of time under 37 CFR 1.136(a) are permitted. The reconsideration request should include a cover letter entitled "**Renewed Petition under 37 CFR 1.137(b).**" This is **not** a final agency action within the meaning of 5 U.S.C. § 704.

The petition for revival of an application for patent abandoned unintentionally under 37 CFR 1.137(b) submitted on December 11, 2003 was signed by one inventor. All communications must be signed by all three inventors. 37 CFR 1.33(b) states:

> "Amendments and other papers filed in the application must be signed by: (1) An attorney or agent of record appointed in compliance with § 1.34(b); (2) A registered attorney or agent not of record who acts in a representative capacity under the provisions of § 1.34(a); (3) The assignee of record of the entire interest, if there is an assignee of record of the entire interest; (4) An assignee of record of an undivided part interest, and any assignee(s) of the remaining interest and any applicant retaining an interest, if there is an assignee of record of an undivided part interest; or (5) All of the applicants (§§ 1.42. 1.43 and 1.47) for patent, unless there is an assignee of record of the entire interest and such assignee has taken action in the application in accordance with §§ 3.71 and 3.73."

Further correspondence with respect to this matter should be addressed as follows:

By mail: Mail Stop PETITION
Commissioner for Patents
Post Office Box 1450
Alexandria, VA 22313-1450

By hand: 2011 South Clark Place
Crystal Plaza Two, Lobby
Room 1B03
Arlington, VA 22202

By facsimile: (703) 872-9306
ATTN: Office of Petitions

Telephone inquiries concerning this decision should be directed to the undersigned at (703) 306-5594.

Retta Williams

Retta Williams
Petitions Examiner
Office of Petitions
Office of the Deputy Commissioner
for Patent Examination Policy

09/887049

SPE RESPONSE FOR CERTIFICATE OF CORRECTION

Paper N

DATE : 1-26-04

TO SPE OF : ART UNIT 2823

SUBJECT : Request for Certificate of Correction on Patent No.: 6,774,491

A response is requested with respect to the accompanying request for a certificate of corre

Please complete this form and return with file, within 7 days to:
Certificates of Correction Branch - PK 3-915
Palm location 7580 - Tel. No. 305-8309

With respect to the change(s) requested, correcting Office and/or Applicant's errors, should patent read as shown in the certificate of correction? No new matter should be introduced, nor the scope or meaning of the claims be changed.

Please check Drawings / other Pub.

Thank You For Your Assistance

Certificates of Correction Br

The request for issuing the above-identified correction(s) is hereby:
Note your decision on the appropriate box.

- ☑ Approved — All changes apply.
- ☐ Approved in Part — Specify below which changes do not ap
- ☐ Denied — State the reasons for denial below.

Comments:

All changes appear proper.

SPE

2823
Art U

PTOL-306 (REV. 7/03)

U.S. DEPARTMENT OF COMMERCE Patent and Tra

UNITED STATES PATENT AND TRADEMARK OFFICE

COMMISSIONER FOR PATENTS
UNITED STATES PATENT AND TRADEMARK OFFICE
WASHINGTON, D.C. 20231
www.uspto.gov

Paper No. 8

David Prashker, P.C.
P.O. Box 5387
Magnolia, MA 01930

COPY MAILED

MAY 28 2002

OFFICE OF PETITIONS

In re Application of :
Seung U. Kim :
Application No. 09/887,145 :
Filed: June 22, 2001 :
Attorney Docket No. UBC-002 :

ON PETITION

This is a decision on the petition under 37 CFR 1.137(b), filed March 14, 2002, to revive the above-identified application.

The petition is **GRANTED**.

The above-identified application became abandoned for failure to respond in a timely manner to the Notice To File Missing Parts of Non-Provisional Application mailed July 19, 2001, which set a shortened statutory period for reply of two(2) months. A two(2) month extension of time under the provisions of 37 CFR 1.136(a) was obtained. Accordingly, the application became abandoned on November 20, 2001.

37 CFR 1.137(b)(3) requires a statement that the entire delay in filing the required reply from the due date for the reply until the filing of a grantable petition pursuant to 37 CFR 1.137(b) was unintentional. If the statement contained in the instant petition varies from the language required by 37CFR 1.137(b)(3), the statement contained in the instant petition is being construed as the statement required by 37 CFR 1.137(b)(3) and petitioner must notify the Office if this is **not** a correct interpretation of the statement contained in the instant petition.

Telephone inquiries concerning this decision should be directed to Cheryl Gibson-Baylor at (703)308-5111, or in her absence, Sherry Brinkley at (703)305-9220.

The application file is being forwarded to Office of Initial Patent Examination for further processing.

Cheryl Gibson-Baylor
Petitions Examiner
Office of Petitions
Office of the Deputy Commissioner
for Patent Examination Policy

Sherry Brinkley
Petitions Examiner

UNITED STATES PATENT AND TRADEMARK OFFICE

COMMISSIONER FOR PATENTS
UNITED STATES PATENT AND TRADEMARK OFFICE
P.O. BOX 1450
ALEXANDRIA, VA 22313-1450
www.uspto.gov

Paper No.

Michael W. Farn
FENWICK & WEST LLP
SILICON VALLEY CENTER
801 California Street
Mountain View, CA 94041

MAILED
MAR 21 2005
Technology Center 2100

In re Application of:
Eng-Whatt Toh
Application No. 09/887,157
Filed: June 21, 2001
For: SECURE AND RELIABLE DATA DELIVERY

DECISION ON REQUEST TO WITHDRAW AS ATTORNEY OR AGENT

This is a decision on the Request To Withdraw from Representation filed November 16, 2004.

A grantable request to withdraw as attorney of record should indicate thereon the present mailing addresses of the attorney(s) who is/are withdrawing from the record and of the applicant. The request for withdrawal must be signed by every attorney seeking to withdraw or contain a clear indication that one attorney is signing on behalf of another/others. A request to withdraw will not be approved unless at least 30 (thirty) days would remain between the date of approval and the later of the expiration date of a time to file a response or the expiration date of the maximum time period which can be extended under 37 C.F.R. § 1. 136(a). The effective date of withdrawal being the date of decision and not the date of request. See M.P.E.P. § 402.06. 37 C.F.R. § 1.36 further requires that the applicant or patent owner be notified of the withdrawal of the attorney or agent.

The request filed November 16, 2004 meets all the requirements. Accordingly the request is **GRANTED**.

All future communications from the Office will be directed to the below-listed address until otherwise notified by applicant. This correspondence address is provided by the withdrawn attorney(s). Applicant is reminded of the obligation to promptly notify the Patent and Trademark Office (Office) of any change in correspondence address to ensure receipt of all communications from the Office.

James R. Matthews

for Vincent N. Trans
Special Program Examiner
Technology Center 2100
Computer Architecture, Software, and
Information Security
(571) 272-3613

cc: Robert N. Blackmon
MEREK, BLACKMORE & VOORHEES, LLC
673 S. Washington St.
Alexandria, VA 22314

UNITED STATES PATENT AND TRADEMARK OFFICE

Technology Center 1700

JUL 27 2004

Mailed:_____

rvk

Paper Number: ____

In re application of :
Calvin T. Gabriel al : DECISION ON
Serial No. 09/887,165 : PETITION
Filed: June 25, 2001 :
For: N-CONTAINING PLASMA ETCH PROCESS WITH REDUCED RESIST POISONING :

This is a response to the PETITION FOR RECONSIDERATION OF HOLDING OF ABANDONMENT, filed October 02, 2003. The petition requests that the abandonment, as set forth in the Notice of Abandonment of April 07, 2003, for failure to timely file a proper response to the Office letter dated October 03, 2002 be withdrawn. The petitioner asserts that the Office letter of October 03, 2002 was not received by applicants.

DECISION

The instant request is accepted as a petition under 37 C.F.R. 1.181 (no fee), and is evaluated under the procedures regarding an acceptable showing of non-receipt of an office action. See MPEP 711.03(c)(II).

The evidence presented is sufficient to establish that the Office letter of October 03, 2002 was not received by petitioner. The evidence provided includes a statement by the petitioner that the Office letter of October 03, 2002 was not received, a statement that a search of the file and docket records was made, and a statement that the search revealed the Office letter of October 03, 2002 was not received. Also provided are a copy of the attorney's automated docket of the Docketing Department and copies of the pages from the docket book of the the attorney's secretary for the due date of January 03, 2003, where the instant application 09/887,165 would have appeared had the Office letter of October 03, 2002 been timely received.

Therefore, the abandonment dated April 07, 2003 was in error. A review of the instant application file indicates that this error was administrately corrected via Notice of Rescinded Abandonment dated March 01, 2004. Therefore, no further action is required.

The Petition is **DISMISSED**.

Jacqueline Stone, Director
Technology Center 1700
Chemical and Materials Engineering

McDERMOTT, WILL & EMERY
600 13th STREET,N.W.
WASHINGTON, DC 20005-3096

UNITED STATES PATENT AND TRADEMARK OFFICE

COMMISSIONER FOR PATENTS
UNITED STATES PATENT AND TRADEMARK OFFICE
WASHINGTON, D.C. 20231
www.uspto.gov

Paper No. 9

Timothy C. Meece
BANNER & WITCOFF, LTD.
Ten South Wacker Drive, Suite 3000
Chicago IL 60606-7407

COPY MAILED

NOV 2 0 2002

OFFICE OF PETITIONS

In re Application of	:	
Burgess, Bertrand, Ciancaglini, Haff, Lannert, Levitt,	:	
Nichols, Poon, J. Smith, K. Smith, Zabloudi, Walsh,	:	
Willow, and Willis	:	
Application No.:09/887,188	:	
Filed: June 22, 2001	:	DECISION ACCORDING
Attorney Docket No:05222.00141	:	STATUS UNDER
For: SYSTEM, METHOD, AND ARTICLE ENABLES	:	RULE 47(a)
RETAIL MANAGEMENT TUTORIAL SYSTEM	:	

This is in response to the renewed petition under 37 CFR 1.47(a), filed June 13, 2002.

The petition is **GRANTED**.

The above-identified application and papers have been reviewed and found in compliance with 37 CFR 1.47(a). This application is hereby accorded Rule 1.47(a) status.

The above-cited application was filed without a properly executed oath or declaration, In response, the Office mailed a "Notice to File Missing parts of Nonprovisional Application (the :Notice") on August 15, 2001. The Notice set forth an extendable period for reply of two months from its mailing date. On March 15, 2002, petitioner filed a petition under 37 CFR 1.47(a) along with declarations for all inventors, except inventor Haff. By a decision mailed May 20, 2002, the petition of March 12, 2002, was dismissed because petitioner did not establish that inventor Haff indeed received a complete copy of the application papers.

Petitioner filed the instant petition along with several exhibits through which petitioner established that although the inventor Haff was mailed the complete application papers (specification, abstract, claims, and assignment) inventor Haff has constructively refused to join the prosecution of the application.

Petitioner has shown that the non-signing inventor has refused to join the filing of the above-identified application after having been presented with the application papers, and the above-identified application and papers have been reviewed and found in compliance with 37 CFR 1.47(a). This application is hereby accorded Rule 1.47(a) status.

As provided in Rule 1.47(c), this Office will forward notice of this application's filing to the non-

signing inventor at the address given in the petition. Notice of the filing of this application will also be published in the Official Gazette.

This application will be forwarded to the Office of Initial Patent Examination for further processing.

Telephone inquiries should be directed to the undersigned at (703) 305-0010.

Kenya A. McLaughlin

Kenya A. McLaughlin
Petitions Attorney
Office of Petitions
Office of the Deputy Commissioner
for Patent Examination Policy

UNITED STATES PATENT AND TRADEMARK OFFICE

Commissioner for Patents
United States Patent and Trademark Office
PO Box 1450
Arlington, VA 22313-1450
www.uspto.gov

Paper No. 6

Patent Administrator
Testa Hurwitz and Thibeault
High Street Tower
125 High Street
Boston, MA 02110

COPY MAILED

JUL 2 5 2003

OFFICE OF PETITIONS

In re Application of
Daniel R. Shephard
Application No. 09/887,201
Filed: June 22, 2001
Attorney Docket No. NUP-004(7959/6)

ON PETITION

This is a decision on the petition under 37 CFR 1.137(b) filed July 14, 2003, to revive the above-identified application.

The petition is granted.

The above-identified application became abandoned for failure to reply in a timely manner in reply to the Notice to File Corrected Application Papers (Notice) mailed August 14, 2001, which set a shortened statutory period for reply of TWO Months from the date of the Notice. No extensions of time under the provisions of 37 CFR 1.136(a) have been obtained. Accordingly, the application became abandoned on October 15, 2001.

The application is being forwarded to Technology Center AU 2818 for further processing.

Telephone inquiries regarding this decision should be directed to the undersigned at (703) 308-6911.

Latrice Bond

Latrice Bond
Paralegal Specialist
Office of Petitions
Office of the Deputy Commissioner
for Patent Examination Policy

UNITED STATES PATENT AND TRADEMARK OFFICE

Commissioner for Patents
United States Patent and Trademark Office
P.O. Box 1450
Alexandria, VA 22313-1450
www.uspto.gov

JAMES D. JACOBS
BAKER AND McKENZIE
805 THIRD AVENUE
NEW YORK, NY 10022

COPY MAILED

AUG 1 2 2004

OFFICE OF PETITIONS

ON PETITION

In re Application of :
Brendon Conlan et al :
Application No. 09/887,208 :
Filed: June 22, 2001 :
Attorney Docket No. 56104576-23 :

This is a decision on the petition, filed August 10, 2004, under 37 CFR 1.313(c)(2) to withdraw the above-identified application from issue after payment of the issue fee.

The petition is **GRANTED**.

The above-identified application is withdrawn from issue for consideration of a submission under 37 CFR 1.114 (request for continued examination). See 37 CFR 1.313(c)(2).

Petitioner is advised that the issue fee paid on July 12, 2004 in the above-identified application cannot be refunded. If, however, the above-identified application is again allowed, petitioner may request that it be applied towards the issue fee required by the new Notice of Allowance.

Telephone inquiries should be directed to Wan Laymon at (703) 306-5685.

This matter is being referred to Technology Center AU 1753 for processing of the request for continued examination under 37 CFR 1.114.

Wan Laymon
Petitions Examiner
Office of Petitions
Office of the Deputy Commissioner
for Patent Examination Policy

---

[1] The request to apply the issue fee to the new Notice may be satisfied by completing and returning the new Issue Fee Transmittal Form PTOL-85(b), which includes the following language thereon: "Commissioner for Patents is requested to apply the Issue Fee and Publication Fee (if any) or re-apply any previously paid issue fee to the application identified above." Petitioner is advised that, whether a fee is indicated as being due or not, the Issue Fee Transmittal Form **must** be completed and timely submitted to avoid abandonment. Note the language in bold text on the first page of the Notice of Allowance and Fee(s) Due (PTOL-85).

UNITED STATES PATENT AND TRADEMARK OFFICE

COMMISSIONER FOR PATENTS
UNITED STATES PATENT AND TRADEMARK OFFICE
WASHINGTON, D.C. 20231
www.uspto.gov
DIW 02-03

Paper No. 11

SCHWEGMAN, LUNDBERG, WOESSNER & KLUTH, P.A.
P.O. BOX 2938
MINNEAPOLIS MN 55402

COPY MAILED
MAR 0 4 2003
OFFICE OF PETITIONS

In re Application of	:
Katagiri et al.	: DECISION GRANTING
Application No. 09/887,272	: PETITION
Filed: 23 June, 2001	:
Att'y Dkt No. 1360.003US2	:

This is a decision on the communication filed on 20 September, 2001, styled "Request to Correct U.S. Patent and Trademark Office Error" which is treated as a petition under 37 CFR 1.10(c) requesting that the above-identified application be accorded a filing date of 23 June, 2001, rather than the presently accorded filing date of 22 June, 2001.

This is also a decision on the petition under 37 CFR 1.78(a)(3), filed on 21 November, 2001, to accept an unintentionally delayed claim under 35 U.S.C. § 120 for the benefit of prior-filed nonprovisional Application No. 09/887,271, filed on 22 June, 2001.

The Office apologizes for the delay in responding to the present petitions.

The petition under 37 CFR 1.10(c) is **granted**.

The petition under 37 CFR 1.78(a)(3) is **dismissed as moot**.

Petition Under 37 CFR 1.10(c)

Petitioners assert that an application was filed on 22 June, 2001, under Express Mail No. EL721275472US and Docket No. 1360.003US1, and that another application with the same invention title and first named inventor was filed on 23 June, 2001, under Express Mail No. EL671641675US and Docket No. 1360.003US2.

Petitioners further assert that the Office erroneously stamped the return receipt postcards for both applications with the above-identified application number and filing date, and request that the latter application (Docket No. 1360.003US2) be assigned a new application number and accorded a filing date of 23 June, 2001.

A review of Office PALM records reveals that the application filed under Docket No. 1360.003US1 has been assigned Application No. 09/887,271, and accorded a filing date of 22 June, 2001, while the application filed under Docket No. 1360.003US2 has been assigned Application No. 09/887,272 and accorded a filing date of 22 June, 2001. Thus, each application has already been assigned a separate Application Number.

Furthermore, a review of the papers located in the official file of Application No. 09/887,272 reveals that an itemized transmittal sheet bearing Express Mail No. EL671641675US was filed with the original application papers. Although a copy of the Express Mail label is not located among the papers filed with the present petition on 20 September, 2001, a search of the USPTO's USPS Express Mail Information Database reveals that this Express Mail Label No. was accepted by the USPS on 23 June, 2001.

In view of the above, the petition is granted to the extent that the filing date of Application No. 09/887,272 is corrected to 23 June, 2001. No petition fee is required and none has been charged.

Petition Under 37 CFR 1.78(a)(3)

A petition for acceptance of a claim for late priority under 37 CFR 1.78(a)(3) is only applicable to those applications filed on or after 29 November, 2000. Further, the petition is appropriate only after the expiration of the period specified in 37 CFR 1.78(a)(2). In addition, the petition under 37 CFR 1.78(a)(3) must be accompanied by:

> **(1)** the reference required by 35 U.S.C. § 120 and 37 CFR 1.78(a)(2) of the prior-filed application, unless previously submitted;[1]

[1]Any nonprovisional application or international application designating the United States of America claiming the benefit of one or more prior-filed copending applications or international applications designating the United States of America must contain or be amended to contain a reference (amendment to the first line of the

(2) the surcharge set forth in § 1.17(t); and

(3) a statement that the entire delay between the date the claim was due under 37 CFR 1.78(a)(2) and the date the claim was filed was unintentional. The Commissioner may require additional information where there is a question whether the delay was unintentional.

The present pending application was filed on 23 June, 2001, and was copending with the above-noted, prior-filed nonprovisional application, at the time of filing, for which priority is claimed. A reference to the above-noted, prior-filed nonprovisional application has been included in an amendment to the first sentence of the specification following the title, which was filed concurrently with the present petition under 37 CFR 1.78(a)(3).

The present nonprovisional application was filed after 29 November, 2000. Also, the reference to the prior-filed nonprovisional was submitted during the pendency of the nonprovisional application for which the benefit is sought.[2] However, since the claim for priority herein is submitted within the period specified in 37 CFR 1.78(a)(2), no petition under 37 CFR 1.78(a)(3) is necessary.[3]

In filing the preliminary amendment accompanying the petition filed on 21 November, 2001, it appears that petitioner is canceling all earlier claims to priority. Petitioner is reminded that if earlier benefit claims are cancelled, petitioner may not later re-assert the claims to benefit being cancelled, because the delay in asserting the claims would not be unintentional.

---

specification following the title or in an application data sheet (ADS) to each such prior-filed application, identifying it by application number (consisting of the series code and serial number) or international application number and international filing date and indicating the relationship of the applications. Cross references to other related applications may be made when appropriate. (*see* § 1.14).

[2] See 35 U.S.C. § 120.

[3] The petition and amendment claiming the benefit under 35 U.S.C. § 120 to Application No. 09/887,271, filed on 22 June, 2001, was filed on 21 November, 2001, which is within 16 months of the filing date of the application for which a claim for benefit under 37 CFR 1.78(a)(2) is made (Application No. 09/881,271).

The application is being returned to the Office of Initial Patent Examination (OIPE) for correction of the filing date to 23 June, 2001, for correction of the priority information, and for issuance of a corrected Filing Receipt.

Telephone inquiries specific to this matter should be directed to Senior Petitions Attorney Douglas I. Wood at (703) 308-6918.

Beverly M. Flanagan
Supervisory Petitions Examiner
Office of Petitions

UNITED STATES PATENT AND TRADEMARK OFFICE

Commissioner for Patents
United States Patent and Trademark Office
P.O. Box 1450
Alexandria, VA 22313-1450
www.uspto.gov

SYNGENTA BIOTECHNOLOGY, INC.
PATENT DEPARTMENT
3054 CORNWALLIS ROAD
P.O. BOX 12257
RESEARCH TRIANGLE PARK NC 27709-2257

COPY MAILED

AUG 06 2007

OFFICE OF PETITIONS

In re Application of :
Katagiri, et al. :
Application No. 09/887,272 :
Filed: June 23, 2001 :
Attorney Docket No. 50009USNP :
For: PLANT GENES INVOLVED IN DEFENSE AGAINST PATHOGENS

ON PETITION

This is a decision on the petition under 37 CFR 1.137(b), filed January 16, 2007, to revive the above-identified application.

The petition is **dismissed**.

Any request for reconsideration of this decision must be submitted within TWO (2) MONTHS from the mail date of this decision. Extensions of time under 37 CFR 1.136(a) are permitted. The reconsideration request should include a cover letter entitled "Renewed Petition under 37 CFR 1.137(b)." Petitioners are advised that this is not a final agency decision.

This application became abandoned for failure to timely reply to the non-final Office action, mailed July 3, 2006, which set an extendable three month period for reply. No extensions of time being obtained and no reply being filed, the application became abandoned on October 4, 2006. A Notice of Abandonment was mailed on February 12, 2007.

A grantable petition pursuant to 37 CFR 1.137(b) must be accompanied by:

(1) the required reply, unless previously filed.;

(2) the petition fee as set forth in 37 CFR 1.17(m);

(3) a statement that the **entire** delay in filing the required reply from the due date for the reply until the filing of a grantable petition pursuant to 37 CFR 1.137(b) was unintentional. The Commissioner may require additional information where there is a question whether the delay was unintentional; and

(4) any terminal disclaimer (and fee set forth in 37 CFR 1.20(d)) required pursuant to 37 CFR 1.137(d).

The instant petition does not satisfy requirement (1) above.

Petitioners assert that the reply filed with the present petition is a continuing application. A review of Office databases does not reveal that a **continuing** application was filed on January 16, 2007. Please provide the Office with the application number of the **continuing** application purportedly filed on January 16, 2007.

Further correspondence with respect to this matter should be addressed as follows:

By mail: Mail Stop PETITION
Commissioner for Patents
Post Office Box 1450
Alexandria, VA 22313-1450

By hand: U.S. Patent and Trademark Office
Customer Service Window, Mail Stop Petition
Randolph Building
401 Dulany Street
Alexandria, VA 22314

By FAX: (571) 273-8300 – ATTN: Office of Petitions

Telephone inquiries concerning this decision should be directed to the undersigned at (571) 272-3230.

Shirene Willis Brantley

Shirene Willis Brantley
Senior Petitions Attorney
Office of Petitions

UNITED STATES PATENT AND TRADEMARK OFFICE

Commissioner for Patents
United States Patent and Trademark Office
P.O. Box 1450
Alexandria, VA 22313-1450
www.uspto.gov
DRW Nov-07

SYNGENTA BIOTECHNOLOGY, INC.
PATENT DEPARTMENT
3054 CORNWALLIS ROAD
P.O. BOX 12257
RESEARCH TRIANGLE PARK NC 27709-2257

COPY MAILED
NOV 02 2007
OFFICE OF PETITIONS

In re Application of	:	
Katagiri et al.	:	
Application Number: 09/887272	:	DECISION ON PETITION
Filing Date: 06/23/2001	:	
Attorney Docket Number:	:	
1360.003US2	:	

This is a decision on the renewed petition under 37 CFR 1.137(b),[1] filed on 15 August, 2007, to revive the above-identified application.

The petition is **GRANTED**.

This application became abandoned on 4 October, 2006, for failure to file a timely reply to the non-final Office action mailed on 3 July, 2006, which set a three (3) month shortened statutory period for reply. No extensions of time under 37 CFR 1.136(a) were obtained. Notice of Abandonment was mailed on 12 February, 2007. The petition filed on 16 January, 2007, was dismissed on 6 August, 2007.

---

[1] Effective December 1, 1997, the provisions of 37 CFR 1.137(b) now provide that where the delay in reply was unintentional, a petition may be filed to revive an abandoned application or a lapsed patent pursuant to 37 CFR 1.137(b). A grantable petition filed under the provisions of 37 CFR 1.137(b) must be accompanied by:

(1) the required reply, unless previously filed. In a nonprovisional application abandoned for failure to prosecute, the required reply may be met by the filing of a continuing application. In a nonprovisional application filed on or after June 8, 1995, and abandoned for failure to prosecute, the required reply may also be met by the filing of a request for continued examination in compliance with § 1.114. In an application or patent, abandoned or lapsed for failure to pay the issue fee or any portion thereof, the required reply must be the payment of the issue fee or any outstanding balance thereof. In an application abandoned for failure to pay the publication fee, the required reply must include payment of the publication fee.

(2) the petition fee as set forth in 37 CFR 1.17(m);

(3) a statement that the entire delay in filing the required reply from the due date for the reply until the filing of a grantable petition pursuant to 37 CFR 1.137(b) was unintentional. The Commissioner may required additional information where there is a question whether the delay was unintentional; and

(4) any terminal disclaimer (and fee as set forth in 37 CFR 1.20(d)) required pursuant to 37 CFR 1.137(c)).

Petitioner requests that the application be revived for copendency with a subsequently filed continuing application. Petitioner states that continuing Application No. 11/654,358 was filed on 16 January, 2007.

Since this application is revived for purposes of continuity only with continuing Application No. 11/654,358, filed on 16 January, 2007, and since continuity has been established by this decision reviving the application, the application is again abandoned in favor of the above-referenced application.

Telephone inquiries concerning this matter may be directed to the undersigned at (571)272-3231.

DWood

Douglas I. Wood
Senior Petitions Attorney
Office of Petitions

#6
3/28/03

UNITED STATES PATENT AND TRADEMARK OFFICE

COMMISSIONER FOR PATEN
UNITED STATES PATENT AND TRADEMARK OFFI
WASHINGTON, D.C. 2023
www.uspto.g

MAILED

MAR 2 8 2003

TECHNOLOGY CENTER 2100

Paper No. 6

Wendi R. Schepler
CARR & FERRELL LLP
2225 Bayshore Road, Suite 200
Palo Alto, CA 94303

In re Application of:	)	
Andrew L. Norrell	)	
Application No. 09/887,283	)	**DECISION ON REQUEST FOR**
Filed: June 21, 2001	)	**WITHDRAWAL AS ATTORNEY**
For: APPARATUS AND METHOD FOR DETECTING PACKET ARRIVAL TIME	)	

This is a decision on the Request To Withdraw from Representation filed March 17, 2003.

A grantable request to withdraw as attorney of record should indicate thereon the present mailing addresses of the attorney(s) who is/are withdrawing from the record and of the applicant. The request for withdrawal must be signed by every attorney seeking to withdraw or contain a clear indication that one attorney is signing on behalf of another/others. A request to withdraw will not be approved unless at least 30 (thirty) days would remain between the date of approval and the later of the expiration date of a time to file a response or the expiration date of the maximum time period which can be extended under 37 C.F.R. § 1. 136(a). The effective date of withdrawal being the date of decision and not the date of request. See M.P.E.P. § 402.06. 37 C.F.R. § 1.36 further requires that the applicant or patent owner be notified of the withdrawal of the attorney or agent.

The request filed March 17, 2003 meets all the requirements. Accordingly the request is **GRANTED**.

All future communications from the Office will be directed to the below-listed address until otherwise notified by applicant. This correspondence address is provided by the withdrawn attorney(s). Applicant is reminded of the obligation to promptly notify the Patent and Trademark Office (Office) of any change in correspondence address to ensure receipt of all communications from the Office.

James R. Matthews
For Vincent N. Trans
Special Programs Examiner
Technology Center 2100
Computer Architecture and Software
(703) 305-9750

cc: Jim H. Salter
BLAKELY, SOKOLOFF, TAYLOR
and ZAFMAN LLP
1279 Oakmead Parkway
Sunnyvale, CA 94085

UNITED STATES PATENT AND TRADEMARK OFFICE

COMMISSIONER FOR PATENTS
UNITED STATES PATENT AND TRADEMARK OFFICE
P.O. BOX 1450
ALEXANDRIA, VA 22313-1450
www.uspto.gov

BLAKELY SOKOLOFF TAYLOR & ZAFMAN
12400 WILSHIRE BOULEVARD, SEVENTH FLOOR
LOS ANGELES, CA 90025

COPY MAILED
JUL 0 8 2004
OFFICE OF PETITIONS

In re Application of	:	
Luft, et al.	:	DECISION GRANTING
Application No. 09/887,303	:	PETITION UNDER 37 CFR
Filed: June 22, 2001	:	1.137(f)
Attorney Docket No.: 4906.P060	:	

This decision is in response to the petition under 37 CFR 1.137(f), filed June 18, 2004.

The petition is hereby **GRANTED**.

Petitioners state that the instant nonprovisional application is the subject of an application filed December 20, 2001 in a foreign country, or under a multinational treaty, that requires publication of applications eighteen months after filing. Petitioners' further state that petitioners unintentionally failed to notify the Office of this filing within 45 days of the filing of the subject application in a foreign country.

Hence, the application became abandoned pursuant to 35 USC 122(b)(2)(B)(iii) and 37 CFR 1.213(c) for failure to timely notify the Office of the filing of an application in a foreign country, or under a multilateral international agreement that requires publication of applications 18 months after filing.

A grantable petition under 37 CFR 1.137(f) must be accompanied by: (1) the reply; (2) the petition fee; (3) a statement that the entire delay in filing the required reply from the due date of the reply until the filing of a grantable petition was unintentional; and (4) any terminal disclaimer (and fee as set forth in § 1.20(d)) required pursuant to 37 CFR 1.137(d).

The instant petition has been reviewed and found to be in compliance with the provisions of 37 CFR 1.137(f). Accordingly, the failure to timely notify the Office of a foreign or international filing within 45 days after the date of filing of such foreign or international application as provided by 35 USC

122(b)(2)(B)(iii) and 37 CFR 1.213(c) is accepted as having been unintentionally delayed.

The previous Request and Certification under 35 USC 122(b)(2)(B)(i) has been rescinded. A Notice Regarding Rescission of Nonpublication Request which sets forth the projected publication date of the instant application is attached herewith.

This application is being forwarded to Technology Center 2600 for further processing.

Telephone inquiries related to this decision may be directed to the undersigned at (703) 305-0310.

Alesia M. Brown
Senior Petitions Attorney
Office of Petitions

Attachment: NOTICE OF NEW OR REVISED PROJECTED PUBLICATION DATE

Approved for use through 04/30/2009. OMB 0651-0016
U.S. Patent and Trademark Office: U.S. DEPARTMENT OF COMMERCE
Under the Paperwork Reduction Act of 1995, no persons are required to respond to a collection of information unless it displays valid OMB control number.

PETITION TO ACCEPT UNINTENTIONALLY DELAYED PAYMENT OF MAINTENANCE FEE IN AN EXPIRED PATENT (37 CFR 1.378(c))

Patent Number	Issue Date (YYYY-MM-DD)	Application Number	Filing Date (YYYY-MM-DD)	Docket Number (if applicable)
6832332	2004-12-14	09887312	2001-06-22	110-081

CAUTION: Maintenance fee (and surcharge, if any) payment must correctly identify: (1) the patent number and (2) the application number of the actual U.S. application leading to issuance of that patent to ensure the fee(s) is/are associated with the correct patent. 37 CFR 1.366(c) and (d).

SMALL ENTITY
☐ Patentee claims, or has previously claimed, small entity status. See 37 CFR 1.27.

LOSS OF ENTITLEMENT TO SMALL ENTITY STATUS
☐ Patentee is no longer entitled to small entity status. See 37 CFR 1.27(g)

NOT Small Entity		Small Entity	
Fee	Code	Fee	Code
◉ 3 ½ year	(1551)	○ 3 ½ year	(2551)
○ 7 ½ year	(1552)	○ 7 ½ year	(2552)
○ 11 ½ year	(1553)	○ 11 ½ year	(2553)

SURCHARGE
The surcharge required by 37 CFR 1.20(i)(2) (Fee Code 1558) must be paid as a condition of accepting unintentionally delayed payment of the maintenance fee.

MAINTENANCE FEE (37 CFR 1.20(e)-(g))
The appropriate maintenance fee must be submitted with this petition.

STATEMENT
THE UNDERSIGNED CERTIFIES THAT THE DELAY IN PAYMENT OF THE MAINTENANCE FEE TO THIS PATENT WAS UNINTENTIONAL

PETITIONER(S) REQUEST THAT THE DELAYED PAYMENT OF THE MAINTENANCE FEE BE ACCEPTED AND THE PATENT REINSTATED

THIS PORTION MUST BE COMPLETED BY THE SIGNATORY OR SIGNATORIES

37 CFR 1.378(d) states: "Any petition under this section must be signed by an attorney or agent registered to practice before the Patent and Trademark Office, or by the patentee, the assignee, or other party in interest."

I certify, in accordance with 37 CFR 1.4(d)(4) that I am

◉ An attorney or agent registered to practice before the Patent and Trademark Office

○ A sole patentee

○ A joint patentee; I certify that I am authorized to sign this submission on behalf of all the other patentees.

○ A joint patentee; all of whom are signing this e-petition

○ The assignee of record of the entire interest

Patent Practitioner			
A signature of the applicant or representative is required in accordance with 37 CFR 1.33 and 10.18. Please see 37 CFR 1.4(d) for the form of the signature			
Signature	/arbarkume/	Date (YYYY-MM-DD)	2009-02-11
Name	Anthony R Barkume	Registration Number	33831

This collection of information is required by 37 CFR 1.378(c). The information is required to obtain or retain a benefit by the public which is to file (and by the USPTO to process) an application. Confidentiality is governed by 35 U.S.C. 122 and 37 CFR 1.11 and 1.14. This collection is estimated to take 1 hour to complete, including gathering, preparing, and submitting the completed application form to the USPTO. Time will vary depending upon the individual case. Any comments on the amount of time you require to complete this form and/ or suggestions for reducing this burden, should be sent to the Chief Information Officer, U.S. Patent and Trademark Office, U.S. Department of Commerce, P.O. Box 1450, Alexandria, VA 22313-1450. DO NOT SEND FEES OR COMPLETED FORMS TO THIS ADDRESS. **This form can only be used when in conjunction with EFS-Web. If this form is mailed to the USPTO, it may cause delays in reinstating the patent.**

Privacy Act Statement

The Privacy Act of 1974 (P.L. 93-579) requires that you be given certain information in connection with your submission of the attached form related to a patent application or patent. Accordingly, pursuant to the requirements of the Act, please be advised that: (1) the general authority for the collection of this information is 35 U.S.C. 2(b)(2); (2) furnishing of the information solicited is voluntary; and (3) the principal purpose for which the information is used by the U.S. Patent and Trademark Office is to process and/or examine your submission related to a patent application or patent. If you do not furnish the requested information, the U.S. Patent and Trademark Office may not be able to process and/or examine your submission, which may result in termination of proceedings or abandonment of the application or expiration of the patent.

The information provided by you in this form will be subject to the following routine uses:

1. The information on this form will be treated confidentially to the extent allowed under the Freedom of Information Act (5 U.S.C. 552) and the Privacy Act (5 U.S.C. 552a). Records from this system of records may be disclosed to the Department of Justice to determine whether the Freedom of Information Act requires disclosure of these record s.

2. A record from this system of records may be disclosed, as a routine use, in the course of presenting evidence to a court, magistrate, or administrative tribunal, including disclosures to opposing counsel in the course of settlement negotiations.

3. A record in this system of records may be disclosed, as a routine use, to a Member of Congress submitting a request involving an individual, to whom the record pertains, when the individual has requested assistance from the Member with respect to the subject matter of the record.

4. A record in this system of records may be disclosed, as a routine use, to a contractor of the Agency having need for the information in order to perform a contract. Recipients of information shall be required to comply with the requirements of the Privacy Act of 1974, as amended, pursuant to 5 U.S.C. 552a(m).

5. A record related to an International Application filed under the Patent Cooperation Treaty in this system of records may be disclosed, as a routine use, to the International Bureau of the World Intellectual Property Organization, pursuant to the Patent Cooperation Treaty.

6. A record in this system of records may be disclosed, as a routine use, to another federal agency for purposes of National Security review (35 U.S.C. 181) and for review pursuant to the Atomic Energy Act (42 U.S.C. 218(c)).

7. A record from this system of records may be disclosed, as a routine use, to the Administrator, General Services, or his/her designee, during an inspection of records conducted by GSA as part of that agency's responsibility to recommend improvements in records management practices and programs, under authority of 44 U.S.C. 2904 and 2906. Such disclosure shall be made in accordance with the GSA regulations governing inspection of records for this purpose, and any other relevant (i.e., GSA or Commerce) directive. Such disclosure shall not be used to make determinations about individuals.

8. A record from this system of records may be disclosed, as a routine use, to the public after either publication of the application pursuant to 35 U.S.C. 122(b) or issuance of a patent pursuant to 35 U.S.C. 151. Further, a record may be disclosed, subject to the limitations of 37 CFR 1.14, as a routine use, to the public if the record was filed in an application which became abandoned or in which the proceedings were terminated and which application is referenced by either a published application, an application open to public inspections or an issued patent.

9. A record from this system of records may be disclosed, as a routine use, to a Federal, State, or local law enforcement agency, if the USPTO becomes aware of a violation or potential violation of law or regulation.

UNITED STATES PATENT AND TRADEMARK OFFICE

Commissioner for Patents
United States Patent and Trademark Office
P.O. Box 1450
Alexandria, VA 22313-1450
www.uspto.gov

In re Patent No. 6832332
Issue Date: December 14,2004
Application No. 09887312
Filed: June 22,2001
Attorney Docket No. 110-081

:
:DECISION GRANTING PETITION
:UNDER 37 CFR 1.378(c)
:

This is a decision on the electronic petition, filed February 11,2009 ,under 37 CFR 1.378(c) to accept the unintentionally delayed payment of the 3.5 year maintenance fee for the above-identified patent.

The petition is **GRANTED**.

The maintenance fee is accepted, and the above-identified patent reinstated as of February 11,2009 . This decision also constitutes notice that the fee has been accepted. An electronic copy of the petition and this decision has been created as an entry in the Image File Wrapper. Nevertheless, petitioner should print and retain an independent copy.

Telephone inquiries related to this electronic decision should be directed to the Electronic Business Center at 1-866-217-9197.

Approved for use through 04/30/2009. OMB 0651-0016
U.S. Patent and Trademark Office: U.S. DEPARTMENT OF COMMERCE
Under the Paperwork Reduction Act of 1995, no persons are required to respond to a collection of information unless it displays valid OMB control number.

PETITION TO ACCEPT UNINTENTIONALLY DELAYED PAYMENT OF MAINTENANCE FEE IN AN EXPIRED PATENT (37 CFR 1.378(c))

Patent Number	Issue Date (YYYY-MM-DD)	Application Number	Filing Date (YYYY-MM-DD)	Docket Number (if applicable)
6673830	2004-01-06	09887375	2001-06-22	CRA-105-CIP-US

CAUTION: Maintenance fee (and surcharge, if any) payment must correctly identify: (1) the patent number and (2) the application number of the actual U.S. application leading to issuance of that patent to ensure the fee(s) is/are associated with the correct patent. 37 CFR 1.366(c) and (d).

SMALL ENTITY
☐ Patentee claims, or has previously claimed, small entity status. See 37 CFR 1.27.

LOSS OF ENTITLEMENT TO SMALL ENTITY STATUS
☐ Patentee is no longer entitled to small entity status. See 37 CFR 1.27(g)

NOT Small Entity		Small Entity	
Fee	Code	Fee	Code
◉ 3 ½ year	(1551)	○ 3 ½ year	(2551)
○ 7 ½ year	(1552)	○ 7 ½ year	(2552)
○ 11 ½ year	(1553)	○ 11 ½ year	(2553)

SURCHARGE
The surcharge required by 37 CFR 1.20(i)(2) (Fee Code 1558) must be paid as a condition of accepting unintentionally delayed payment of the maintenance fee.

MAINTENANCE FEE (37 CFR 1.20(e)-(g))
The appropriate maintenance fee must be submitted with this petition.

STATEMENT
THE UNDERSIGNED CERTIFIES THAT THE DELAY IN PAYMENT OF THE MAINTENANCE FEE TO THIS PATENT WAS UNINTENTIONAL

PETITIONER(S) REQUEST THAT THE DELAYED PAYMENT OF THE MAINTENANCE FEE BE ACCEPTED AND THE PATENT REINSTATED

THIS PORTION MUST BE COMPLETED BY THE SIGNATORY OR SIGNATORIES

37 CFR 1.378(d) states: "Any petition under this section must be signed by an attorney or agent registered to practice before the Patent and Trademark Office, or by the patentee, the assignee, or other party in interest."

I certify, in accordance with 37 CFR 1.4(d)(4) that I am

◉ An attorney or agent registered to practice before the Patent and Trademark Office

○ A sole patentee

○ A joint patentee; I certify that I am authorized to sign this submission on behalf of all the other patentees.

○ A joint patentee; all of whom are signing this e-petition

○ The assignee of record of the entire interest

Patent Practitioner			
A signature of the applicant or representative is required in accordance with 37 CFR 1.33 and 10.18. Please see 37 CFR 1.4(d) for the form of the signature			
Signature	/ David I. Roche /	Date (YYYY-MM-DD)	2008-03-17
Name	David I. ROCHE	Registration Number	30797

This collection of information is required by 37 CFR 1.378(c). The information is required to obtain or retain a benefit by the public which is to file (and by the USPTO to process) an application. Confidentiality is governed by 35 U.S.C. 122 and 37 CFR 1.11 and 1.14. This collection is estimated to take 1 hour to complete, including gathering, preparing, and submitting the completed application form to the USPTO. Time will vary depending upon the individual case. Any comments on the amount of time you require to complete this form and/ or suggestions for reducing this burden, should be sent to the Chief Information Officer, U.S. Patent and Trademark Office, U.S. Department of Commerce, P.O. Box 1450, Alexandria, VA 22313-1450. DO NOT SEND FEES OR COMPLETED FORMS TO THIS ADDRESS. **This form can only be used when in conjunction with EFS-Web. If this form is mailed to the USPTO, it may cause delays in reinstating the patent.**

Privacy Act Statement

The Privacy Act of 1974 (P.L. 93-579) requires that you be given certain information in connection with your submission of the attached form related to a patent application or patent. Accordingly, pursuant to the requirements of the Act, please be advised that: (1) the general authority for the collection of this information is 35 U.S.C. 2(b)(2); (2) furnishing of the information solicited is voluntary; and (3) the principal purpose for which the information is used by the U.S. Patent and Trademark Office is to process and/or examine your submission related to a patent application or patent. If you do not furnish the requested information, the U.S. Patent and Trademark Office may not be able to process and/or examine your submission, which may result in termination of proceedings or abandonment of the application or expiration of the patent.

The information provided by you in this form will be subject to the following routine uses:

1. The information on this form will be treated confidentially to the extent allowed under the Freedom of Information Act (5 U.S.C. 552) and the Privacy Act (5 U.S.C. 552a). Records from this system of records may be disclosed to the Department of Justice to determine whether the Freedom of Information Act requires disclosure of these record s.

2. A record from this system of records may be disclosed, as a routine use, in the course of presenting evidence to a court, magistrate, or administrative tribunal, including disclosures to opposing counsel in the course of settlement negotiations.

3. A record in this system of records may be disclosed, as a routine use, to a Member of Congress submitting a request involving an individual, to whom the record pertains, when the individual has requested assistance from the Member with respect to the subject matter of the record.

4. A record in this system of records may be disclosed, as a routine use, to a contractor of the Agency having need for the information in order to perform a contract. Recipients of information shall be required to comply with the requirements of the Privacy Act of 1974, as amended, pursuant to 5 U.S.C. 552a(m).

5. A record related to an International Application filed under the Patent Cooperation Treaty in this system of records may be disclosed, as a routine use, to the International Bureau of the World Intellectual Property Organization, pursuant to the Patent Cooperation Treaty.

6. A record in this system of records may be disclosed, as a routine use, to another federal agency for purposes of National Security review (35 U.S.C. 181) and for review pursuant to the Atomic Energy Act (42 U.S.C. 218(c)).

7. A record from this system of records may be disclosed, as a routine use, to the Administrator, General Services, or his/her designee, during an inspection of records conducted by GSA as part of that agency's responsibility to recommend improvements in records management practices and programs, under authority of 44 U.S.C. 2904 and 2906. Such disclosure shall be made in accordance with the GSA regulations governing inspection of records for this purpose, and any other relevant (i.e., GSA or Commerce) directive. Such disclosure shall not be used to make determinations about individuals.

8. A record from this system of records may be disclosed, as a routine use, to the public after either publication of the application pursuant to 35 U.S.C. 122(b) or issuance of a patent pursuant to 35 U.S.C. 151. Further, a record may be disclosed, subject to the limitations of 37 CFR 1.14, as a routine use, to the public if the record was filed in an application which became abandoned or in which the proceedings were terminated and which application is referenced by either a published application, an application open to public inspections or an issued patent.

9. A record from this system of records may be disclosed, as a routine use, to a Federal, State, or local law enforcement agency, if the USPTO becomes aware of a violation or potential violation of law or regulation.

UNITED STATES PATENT AND TRADEMARK OFFICE

Commissioner for Patents
United States Patent and Trademark Office
P.O. Box 1450
Alexandria, VA 22313-1450
www.uspto.gov

In re Patent No. 6673830
Issue Date: January 6,2004
Application No. 09887375
Filed: June 22,2001
Attorney Docket No. 209953

:
:DECISION GRANTING PETITION
:UNDER 37 CFR 1.378(c)
:

This is a decision on the electronic petition, filed March 17,2008 ,under 37 CFR 1.378(c) to accept the unintentionally delayed payment of the 3.5 year maintenance fee for the above-identified patent.

The petition is GRANTED.

The maintenance fee is accepted, and the above-identified patent reinstated as of March 17,2008 . This decision also constitutes notice that the fee has been accepted. An electronic copy of the petition and this decision has been created as an entry in an Image File Wrapper. Nevertheless, petitioner should print and retain an independent copy

Telephone inquires related to this electronic decision should be directed to the Electronic Business Center at 1-866-217-9197.

UNITED STATES PATENT AND TRADEMARK OFFICE

Commissioner for Patents
United States Patent and Trademark Office
P.O. Box 1450
Alexandria, VA 22313-1450
www.uspto.gov

LEE & HAYES PLLC
421 W RIVERSIDE AVENUE SUITE 500
SPOKANE, WA 99201

COPY MAILED
SEP 04 2008

In re Application of Wang et al. :
Application No. 09/887,413 : Decision on Petition
Filing Date: June 21, 2001 :
Attorney Docket No. MS1-0752US :

This is a decision on the petition under 37 CFR 1.181 filed June 13, 2008, requesting the Office withdraw the holding of abandonment.

The petition is **granted.**

Facts:

On February 19, 2008, the Board of Appeals and Interferences issued a decision. The decision affirmed the Examiner's rejection of all the claims and entered a new ground of rejection for claims 35-42 under 35 U.S.C. § 101.

Quoting 37 CFR 41.50(b), the decision stated petitioner must take one of the following actions within two months in order to avoid termination of proceedings:

(1) "Reopen prosecution. Submit an appropriate amendment of the claims so rejected or new evidence relating to the claims so rejected, or both...."
(2) "Request rehearing."

Petitioner filed an amendment on Monday, April 21, 2008. The amendment amends claims 1-5, 7-14, 16, 18-22, 24-26, 28, 30, and 32-42.

The Office mailed a Notice of Abandonment on May 13, 2008. The Notice stated the application was abandoned because the period for seeking review of the Board decision had expired and no claims had been allowed.

Discussion:

Section IV of MPEP 1214.06 states,

> If the Board affirms the examiner's rejection, but also enters a new ground of rejection under 37 CFR 41.50(b), the subsequent procedure depends upon the action taken by the appellant with respect to the 37 CFR 41.50(b) rejection.

(A) If the appellant elects to proceed before the examiner with regard to the new rejection (see MPEP § 1214.01, paragraph I) the Board's affirmance will be treated as nonfinal, and no request for rehearing of the affirmance need be filed at that time. Prosecution before the examiner of the 37 CFR 41.50(b) rejection can incidentally result in overcoming the affirmed rejection even though the affirmed rejection is not open to further prosecution. Therefore, it is possible for the application to be allowed as a result of the limited prosecution before the examiner of the 37 CFR 41.50(b) rejection.

The fact the examiner's rejection of all the claims was affirmed did not prohibit petitioner from complying with 37 CFR 41.50(b)(1), by filing an amendment, in order to avoid abandonment.

The April 21, 2008 amendment improperly seeks to amend claims that were not rejected based on 35 U.S.C. § 101. The Board *only* entered a new ground of rejection for claims 35-42. The amendment seeks to amend claims 1-5, 7-14, 16, 18-22, 24-26, 28, 30, and 32-42. Although the amendment improperly seeks to amend claims not falling within the new ground of rejection, the amendment also seeks to amend claims that do fall within the new ground of rejection. Therefore, the timely filed amendment was sufficient to avoid abandonment of the application.

Technology Center Art Unit 2164 will be informed of the instant decision and the amendment filed April 21, 2008, will be examined in due course.

Telephone inquiries regarding this communication should be directed to Petitions Attorney Steven Brantley at (571) 272-3203.

Charles Steven Brantley
Senior Petitions Attorney
Office of Petitions

UNITED STATES PATENT AND TRADEMARK OFFICE

Commissioner for Patents
United States Patent and Trademark Office
P.O. Box 1450
Alexandria, VA 22313-1450
www.uspto.gov
DIW 08-04

Paper No. 21

JEFFREY J. KING, ESQ
GRAYBEAL JACKSON HALEY LLP
155- 108 th AVENUE, N.E.
SUITE 350
BELLEVUE WA 90884-5901

COPY MAILED

AUG 2 3 2004

OFFICE OF PETITIONS

In re Application of	:
Krempl et al.	: DECISION ON PETITIONS
Application No. 09/887,469	: UNDER 37 CFR 1.78(a)(3)
Filed: 22 June, 2001	: AND
Atty Docket No. NIH-013/E-225-00/1	: UNDER 37 CFR 1.78(a)(6)

This is a decision on the petition filed on 15 December, 2003, under 37 CFR §§ 1.78(a)(3), which is treated as a petition filed under 37 CFR §§ 1.78(a)(3) and 1.78(a)(6), to accept an unintentionally delayed claim under 35 U.S.C. §§ 120 and 119(e) for the benefit of the prior-filed nonprovisional and provisional applications set forth in the amendment filed on 25 August, 2003.

The petition is **DISMISSED**.

A petition for acceptance of a claim for late priority under 37 CFR §§ 1.78(a)(3) and 1.78(a)(6) is only applicable to those applications filed on or after 29 November, 2000. Further, the petition is appropriate only after the expiration of the period specified in 37 CFR §§ 1.78(a)(2)(ii) and 1.78(a)(5)(ii). In addition, the petition under 37 CFR §§ 1.78(a)(3) and 1.78(a)(6) must be accompanied by:

(1) the reference required by 35 U.S.C. §§ 120 and 119 and 37 CFR §§ 1.78(a)(2)(i) and 1.78(a)(5)(i) of the prior-filed application, unless previously submitted;[1]

---

[1]Any nonprovisional application or international application designated the United States of America claiming the benefit of one or more prior-filed copending applications or international applications designated the United States of America must contain or be amended to contain a reference (amendment to the first line of the

(2) the surcharge set forth in § 1.17(t); and

(3) a statement that the entire delay between the date the claim was due under 37 CFR §§ 1.78(a)(2)(ii) and 1.78(a)(5)(ii) and the date the claim was filed was unintentional. The Commissioner may require additional information where there is a question whether the delay was unintentional.

A reference to add the prior-filed applications on page one following the first sentence of the specification has been included in an amendment filed on 25 August, 2003. However, the amendment is not acceptable as drafted since it improperly incorporates by reference the prior application. Petitioner's attention is directed to Dart Industries v. Banner, 636 F.2d 684, 207 USPQ 273 (C.A.D.C. 1980) where the court drew a distinction between a permissible 35 U.S.C. § 120 statement and the impermissible introduction of new matter by way of incorporation by reference in a 35 U.S.C. § 120 statement. The court specifically stated:

> Section 120 merely provides mechanism whereby an application becomes entitled to benefit of the filing date of an earlier application disclosing the same subject matter. Common subject matter must be disclosed, in both applications, either specifically or by an express incorporation-by-reference of prior disclosed subject matter. Nothing in section 120 itself operates to carry forward any disclosure from an earlier application. In re de Seversky, supra at 674, 177 USPQ at 146-147. Section 120 contains no magical disclosure-augmenting powers able to piece new matter barriers. It cannot, therefore, "limit" the absolute and express prohibition against new matter contained in section 251.

Additionally, the amendment filed with the present petition does not properly state the relationship (*i.e.*, continuation, divisional, or continuation-in-part) between the present application and prior nonprovisional application 09/847,173 as required by (1) above. Petitioner must set forth the relationship between the applications in a new amendment.

---

specification following the title or in an application data sheet (ADS))to each such prior-filed application, identifying it by application number (consisting of the series code and serial number) or international application number and indicating the relationship of the applications. Cross references to other related applications may be made when appropriate (*see* § 1.14).

Accordingly, before the petitions under 37 CFR §§ 1.78(a)(3) and 1.78(a)(6) can be granted, a renewed petition and a substitute amendment to correct the above matters is required.

Further correspondence with respect to this matter should be addressed as follows:

By mail: Mail Stop Petition
Commissioner for Patents
P.O. Box 1450
Alexandria, VA 22313-1450

By FAX: (703)872-9306
Attn: Office of Petitions

By hand: U.S. Patent and Trademark Office
220 20th Street S.
Customer Window, Mail Stop Petitions
Crystal Plaza Two, Lobby, Room 1B03
Arlington, VA 22202

The application is being forwarded to Technology Center 1600 for consideration of the amendment filed under 37 CFR 1.116.

Telephone inquires should be directed to Senior Petitions Attorney Douglas I. Wood at 703-308-6918.

Charles A. Pearson
Director, Office of Petitions

UNITED STATES PATENT AND TRADEMARK OFFICE

Commissioner for Patents
United States Patent and Trademark Office
P.O. Box 1450
Alexandria, VA 22313-1450
www.uspto.gov
DIW 09-04

JEFFREY J. KING, ESQ.
GRAYBEAL JACKSON HALEY LLP
155 108TH AVENUE, N.E.
SUITE 350
BELLEVUE WA 90884-5901

COPY MAILED

SEP 14 2004

OFFICE OF PETITIONS

In re Application of	:
Krempl et al.	: DECISION ON PETITIONS
Application No. 09/887,469	: UNDER 37 CFR 1.78(a)(3) AND
Filed: 22 June, 2001	: UNDER 37 CFR 1.78(a)(6)
Atty Docket No. NIH-013/E-225-00/1	:

This is a decision on the twice renewed petition filed on 26 August, 2004, which is treated as a petition under 37 CFR 1.78(a)(3) and 1.78(a)(6), to accept an unintentionally delayed claim under 35 U.S.C. §§ 120 and 119(e) for the benefit of the prior-filed provisional and nonprovisional applications as set forth in the concurrently-filed amendment.

The petitions are **GRANTED**

A petition for acceptance of a late claim for benefit under 37 CFR 1.78(a)(3) and 1.78(a)(6) is only applicable to those applications filed on or after 29 November, 2000. Further, the petition is appropriate only after the expiration of the period specified in 37 CFR 1.78(a)(2)(ii) and 1.78(a)(5)(ii). In addition, the petition under 37 CFR 1.78(a)(3) and 1.78(a)(6) must be accompanied by:

> **(1)** the reference required by 35 U.S.C. §§ 120 and 119(e) and 37 CFR 1.78(a)(2)(i) and 1.78(a)(5)(i) of the prior-filed application, unless previously submitted;[1]

[1]Any nonprovisional application or international application designating the United States of America claiming the benefit of one or more prior-filed copending applications or international applications designating the United States of America must contain or be amended to contain a reference (amendment to the first line of the specification following the title or in an application data sheet (ADS) to each such prior-filed application, identifying it by application number (consisting of the series code and serial number) or international application number and international filing date and indicating the relationship of the applications. Cross references to other related applications may be made when appropriate. (*see* § 1.14).

(2) the surcharge set forth in § 1.17(t); and

(3) a statement that the entire delay between the date the claim was due under 37 CFR 1.78(a)(2)(ii) and 37 CFR 1.78(a)(5)(ii) and the date the claim was filed was unintentional. The Commissioner may require additional information where there is a question whether the delay was unintentional.

The instant application was filed on 22 June, 2001, and was pending at the time of filing of the instant petition. Additionally, the nonprovisional applications were filed within 12 months of the provisional applications to which priority under 35 U.S.C. § 119(e) is now being claimed. An amendment to insert a reference to the first sentence of the specification following the title, has been submitted as required by 37 CFR 1.78(a)(2)(iii) and 1.78(a)(5)(iii).

The instant nonprovisional application was filed after 29 November, 2000, and the claim for priority herein is submitted after the expiration of the period specified in 37 CFR 1.78(a)(2)(ii) and 1.78(a)(5)(ii).[2] Accordingly, having found that the instant petition satisfies the conditions of 37 CFR 1.78(a)(3) and 1.78(a)(6) for acceptance of an unintentionally delayed claim for priority under 35 U.S.C. §§ 120 and 119(e), the petition to accept an unintentionally delayed claim of benefit to the prior-filed nonprovisional and provisional applications is granted.

The granting of the petition to accept the delayed benefit claim to the prior-filed application under 37 CFR 1.78(a)(3) and 1.78(a)(6) should not be construed as meaning that the instant application is entitled to the benefit of the filing date of the prior-filed applications. In order for the instant application to be entitled to the benefit of the prior-filed application, all other requirements under 35 U.S.C. § 120 and 37 CFR 1.78(a)(1) and (a)(2) and 35 U.S.C. § 119(e) and 37 CFR 1.78(a)(4) and (a)(5) must be met. Similarly, the fact that the corrected Filing Receipt accompanying this decision on petition includes the prior-filed applications should ***not*** *be construed as meaning that applicant is entitled to the claim for benefit of the prior-filed application noted thereon. Accordingly, the examiner will, in due course, consider this benefit claim and determine whether*

---

[2] See 35 U.S.C. § 120 and 119(e).

the instant application is entitled to the benefit of the earlier filing date.

It is noted that the amendment filed on 26 August, 2004, incorrectly states the filing date of Application No. 09/847,173 as 1 May, 2001. According to Office records, the filing date for this application is 3 May, 2001. While the correct filing date has been entered in the priority data, petitioners should submit a new preliminary amendment correcting the priority information.

A corrected Filing Receipt, which includes the priority claim to the prior-filed applications, accompanies this decision on petition.

Any questions concerning this matter may be directed to Senior Petitions Attorney Douglas I. Wood at 703-308-6918.

The application is being referred to Technology Center Art Unit 1648 for appropriate action on the amendment submitted on 26 August, 2004, including consideration by the examiner of the claim under 35 U.S.C. § 120 and 37 CFR 1.78(a)(1) and (a)(2) for the benefit of the prior-filed nonprovisional applications, and for consideration of the claim under 35 U.S.C. § 119(e) and 37 CFR 1.78(a)(4) and (5) for the benefit of the prior-filed provisional applications.

Frances Hicks

Frances M. Hicks
Lead Petitions Examiner
Office of Petitions
Office of the Deputy Commissioner
for Patent Examination Policy

Encl: Corrected Filing Receipt

UNITED STATES
PATENT AND
TRADEMARK OFFICE

NOV 15 2002

UNDER SECRETARY OF COMMERCE FOR INTELLECTUAL PROPERTY
AND DIRECTOR OF THE UNITED STATES PATENT AND TRADEMARK OFFICE
WASHINGTON, D.C. 20231
WWW.USPTO.GOV

STEPHANIE L SIEDMAN ESQ
HELLER EHRMAN WHITE & MCAULIFFE LLP
4350 LA JOLLA VILLAGE DRIVE

#13

In re Application of	:
Partha S. Banerjee et al	:
Serial No.: 09/887,496	: PETITION DECISION
Filed: June 22, 2001	:
Attorney Docket No.: 7707	:

This is a decision on the petition under 37 CFR 1.144, filed June 17, 2002, to withdraw an improper restriction requirement. The delay in acting on this petition is regretted, however the petition was not correlated with the file for more than two months.

BACKGROUND

A review of the file history shows that this application was filed under 35 U.S.C. 111. The examiner mailed a first Office action to applicants on January 7, 2002, setting forth a four way restriction requirement, as follows:

> Group I , claims 1-83, 87-89, 99-112 and 117-119, drawn to pharmaceutical compositions comprising formoterol and a steroidal anti-inflammatory agent;
> Group II, claims 84-86 and 94-98, drawn to a method of treating bronchial disorders using pharmaceutical compositions comprising formoterol and a steroidal anti-inflammatory agent;
> Group III, claims 93, 113-116 and 120-121, drawn to pharmaceutical compositions comprising formoterol, a steroidal anti-inflammatory agent and another active agent;
> Group IV, claims 90-92, drawn to a method of treating bronchial disorders using pharmaceutical compositions comprising formoterol, a steroidal anti-inflammatory agent and another active agent.

The examiner reasoned that Groups I and II and Groups III and IV were related as product and process of use and were distinct and separate inventions giving appropriate reasoning. The examiner also indicated that Groups I and II (sic III) and Groups III (sic II) and IV were unrelated as they had different modes of operation. The examiner required further an election of species for each component of the composition - formoterols, anti-inflammatories and the third active agent.

Applicants replied to the Office action on January 31, 2002, electing the claims of Group I with traverse and the species formoterol and fluticasaone or fluticasone proprionate. Applicants canceled claims 84-86, 90-92 and 94-98 (the claims of Groups II and IV). Applicants traversed the requirement on the basis that Groups I and III (and Groups II and IV) are related as combination and subcombination and the examiner had not demonstrated the required two way distinctness.

The examiner mailed a non-Final Office action to applicants on April 24, 2002. The examiner maintained the restriction requirement, making it Final, and replied to applicants' traversal. The examiner reasoned that the two groups (I and III) are distinct because they have different numbers of active ingredients and therefor different modes of operation. The examiner made the requirement Final. The examiner also rejected claims 63-72 under 35 U.S.C. 112, second paragraph for indefiniteness and claims 1-64, 69-83, 87-89, 99-112 and 117-119 as obvious under 35 U.S.C. 103(a) over Hochrainer et al in view of Bartow et al and PDR.

Applicants filed this petition on June 17, 2002. Applicants also filed a reply to the rest of the Office action on July 24, 2002, by amending several parts of the specification and claims 1, 63, 95 and 117, and arguing the rejections of record. The restriction requirement was again traversed and the petition referenced.

DISCUSSION

Applicants argue that the claims as grouped by the examiner are related as two sets of combination-subcombination claims and that the examiner has not met the requirement for restricting claims in this relationship by showing two-way distinctness. The examiner reasons, conversely that the related claims have different modes of operation.

A review of the claims shows that the claims of Group I all depend directly or indirectly on claim 1 (composition), 77 (nebulized composition), 78 (kit comprising the composition and nebulizer) or 117 (combination of solutions). These claims are based on combining formoterol and an anti-inflammatory agent as active ingredients to which may be added a number of other components, such as buffers, tonicity agents, etc. The claims of Group III all depend directly or indirectly from Claim 1 and are based on a combination of formoterol, an anti-inflammatory agent and a third component (agonists, antagonists, inhibitors, etc.) all of which are also considered to be active agents. Clearly the claims of Group III are a combination of the composition of Group I and an additional ingredient. Thus the claims of Group I are a subcombination of the claims of Group III. As noted by applicants, claims in this relationship can only be restricted from each other where the combination does not require the particulars of the subcombination for patentability and the subcombination can be shown to have utility by itself or in other and different relations.

By definition a subcombination has less that all of the elements of the combination. Here the subcombination does not have or require the third active component for patentability and has utility in and of itself, thus meeting the second requirement noted above for restriction. The converse, however, is not true; the combination does require the elements of the subcombination for patentability. Assuming that the subcombination is a patentable composition of matter, adding an additional active element to it to make a new composition of matter wherein each component

retains its identity, as in the subcombination, must also create a patentable composition based on the patentability of the subcombination. It is possible that the subcombination could be determined not to be patentable, but that the addition of the third component to the first two components creates a patentable composition. In this instance patentability of the combination would not be dependant on the subcombination as it is unpatentable. As applicants have elected the subcombination for prosecution consideration of the combination is required as the examiner has not yet shown that the combination does not depend on the subcombination for patentability. The examiner's argument that the compositions would have different modes of operation is inapposite as only compositions are being claimed, not methods of use which would have a "mode of operation". Groups I and III are hereby rejoined as a single group encompassing all pending claims for examination purposes.

Applicants make similar arguments as to the claims of Groups II and IV. However, since the claims of these Groups have all been canceled no decision thereon is required. Applicants have not traversed the election of species requirement which remains in effect.

DECISION

Applicants' petition under 37 CFR 1.144 is **GRANTED** for the reasons set forth above.

As applicants have replied to the last Office action, and the response is a complete response, the application will be forwarded to the examiner for further action not inconsistent with this decision.

Should there be any questions with respect to this decision, please contact William R. Dixon, Jr., by mail addressed to: Director, Technology Center 1600, Washington, D.C. 20231, or by telephone at (703)308-3824 or by facsimile transmission at (703) 305-7230.

John Doll
Director, Technology Center 1600

UNITED STATES PATENT AND TRADEMARK OFFICE

Commissioner for Patents
United States Patent and Trademark Office
P.O. Box 1450
Alexandria, VA 22313-1450
www.uspto.gov

FOLEY & LARDNER
777 EAST WISCONSIN AVENUE
MILWAUKEE, WI 53202-5306

COPY MAILED

JUN 21 2006

OFFICE OF PETITIONS

In re Application of	:	
David William LaBrie et al	:	
Application No. 09/887,509	:	DECISION ON PETITION
Filed: June 22, 2001	:	TO WITHDRAW
Attorney Docket No. 053028-0102	:	FROM RECORD
	:	

This is a decision on the Request to Withdraw as attorney or agent of record under 37 C.F.R. § 1.36(b), filed December 16, 2005.

The petition is **APPROVED**.

A grantable request to withdraw as attorney/agent of record must be signed by every attorney/agent seeking to withdraw or contain a clear indication that one attorney is signing on behalf of another/others. A request to withdraw will not be approved unless at least 30 (thirty) days would remain between the date of approval and the later of the expiration date of a time to file a response or the expiration date of the maximum time period which can be extended under 37 C.F.R. § 1.136(a).

The request was signed by Walter E. Zimmerman on behalf of all attorneys/agents of record who are associated with customer No. 26371.

All attorneys/agents associated with customer No. 26371 have been withdrawn.

Applicants are reminded that there is no attorney of record at this time.

All future communications from the Office will continue to be directed to the first named inventor at the below-listed address.

Telephone inquires concerning this decision should be directed to Wan Laymon at 571-272-3220.

This application is being referred to Technology Center AU 3622.

David Bucci
Petitions Examiner
Office of Petitions

cc: MR. DAVID LABRIE
CI TERRA TECHNOLOGIES
4627 EAST COUNTY DOWN DR.
CHANDLER, AZ 85249

UNITED STATES PATENT AND TRADEMARK OFFICE

UNDER SECRETARY OF COMMERCE FOR INTELLECTUAL PROPERTY AND
DIRECTOR OF THE UNITED STATES PATENT AND TRADEMARK OFFICE
WASHINGTON, DC 20231
www.uspto.gov

JUL 22 2005

MORRISON & FOERSTER LLP
1650 TYSONS BOULEVARD
SUITE 300
MCLEAN, VA 22102

In re application of
Jon C. Evans et al.
Application No. 09/887,526 :
Filed: June 25, 2001 :
For: SYSTEM AND METHOD FOR COMPUTER –CREATED ADVERTISEMENTS :

DECISION ON REQUEST FOR WITHDRAWAL OF ATTORNEY

This is a decision on the request filed on February 22, 2005, under 37 CFR 1.36 and MPEP 402.06, requesting permission to withdraw as the attorney of record in the above-identified application.

The request is **NOT APPROVED**.

Under 37 CFR 1.36 an attorney may withdraw only upon application to and approval by the Commissioner. It should be noted that a withdrawal is effective when approved, not when filed. Besides giving due notice to his or her client and delivering to the client all papers and property to which the client is entitled as specified under 37 CFR 10.40, approval of such a request requires that the following conditions be met:

A) Each attorney of record must sign the notice of withdrawal, or the notice must contain a clear indication of one attorney signing on behalf of another, because the Office does not recognize law firms;

B) A proper reason for the withdrawal as enumerated in 37 CFR 10.40(b) or subsection (1)-(6) of 37 CFR 10.40(c) must be provided; and

C) If withdrawal is requested in accordance with 37 CFR 10.40(c) above, there must be at least 30 days between approval of the withdrawal and the later of the expiration date of a time period for reply or the expiration date of the period which can be obtained by a petition and fee for extension of time under 37 CFR 1.136(a).

The request to withdraw as attorney in the above-identified application is not approved because the request does not comply with Items A) and B).

As to condition A), In the original declaration, Paul Booth, Colin Sandercock, Patricia Granados, John Isacson, Ronald Kamis, Marvin Motsenbocker, Susan Mcbee, Joe Puttlitz, and Stephen Yoder were also given power in this application. These attorney are not listed under the customer number given in the request. If only the attorneys listed in the request are to have power withdrawn and the other attorneys listed above are intended to remain having power of attorney for this case, this needs to be made clear in any supplemental request; otherwise the above-noted attorneys would need to be added to the request.

As to condition B), The statement included in the request, "Application is being transferred to another attorney," does not satisfy one of the valid reasons for withdrawal under 37 CFR 10.40 (b)(1)-(4) or (1)-(6). The assignee, eComSystems, Inc. may not transfer the application to another attorney on his own accord.

Kenneth J. Dorner
Special Programs Examiner
Patent Technology Center 3600
(571) 272-6587
Facsimile No.: (571) 273-8300

KJD/slb: 07/19/05

UNITED STATES PATENT AND TRADEMARK OFFICE

Commissioner for Patents
United States Patent and Trademark Office
P.O. Box 1450
Alexandria, VA 22313-1450
www.uspto.gov

JAMES REMENICK
NOVAK, DRUCE & QUIGG, LLP
1300 I STREET NW
SUITE 1000, WEST TOWER
WASHINGTON, DC 20005

COPY MAILED

OCT 04 2007

OFFICE OF PETITIONS

In re Application of	:	
Jon C. Evans, et al.	:	
Application No. 09/887,526	:	DECISION GRANTING PETITION
Filed: June 25, 2001	:	UNDER 37 CFR 1.313(c)(2)
Attorney Docket No. 8116.002.US	:	

This is a decision on the petition under 37 CFR 1.313(c)(2), filed October 1, 2007, to withdraw the above-identified application from issue after payment of the issue fee.

The petition is **GRANTED**.

The above-identified application is withdrawn from issue for consideration of a submission under 37 CFR 1.114 (request for continued examination). *See* 37 CFR 1.313(c)(2).

Petitioner is advised that the issue fee paid on July 17, 2007 cannot be refunded. If, however, this application is again allowed, petitioner may request that it be applied towards the issue fee required by the new Notice of Allowance.[1]

Telephone inquiries regarding this decision should be directed to April Wise at (571) 272-1642.

This application is being referred to Technology Center AU 3627 for processing of the request for continued examination under 37 CFR 1.114 and for consideration of the concurrently filed information disclosure statement.

Frances Hicks

Frances M. Hicks
Petitions Examiner
Office of Petitions

---

[1] *The request to apply the issue fee to the new Notice may be satisfied by completing and returning the new Part B – Fee(s) Transmittal Form (along with any balance due at the time of submission). Petitioner is advised that the Issue Fee Transmittal Form* ***must*** *be completed and timely submitted to avoid abandonment of the application.*

UNITED STATES PATENT AND TRADEMARK OFFICE

COMMISSIONER FOR PATENTS
UNITED STATES PATENT AND TRADEMARK OFFICE
P.O. BOX 1450
ALEXANDRIA, VA 22313-1450
www.uspto.gov

Jay Finkelstein
Browdy and Neimark, P.L.L.C.
624 Ninth Street, NW
Suite 300
Washington, DC 20001-5303

MAILED

NOV 30 2005

TECHNOLOGY CENTER 2100

In re Application of: Loy, et al.
Application No. 09/887,549
Attorney Docket No. LOY=4
Filed: June 25, 2001
For: **IMPLEMENTING DATA MANAGEMENT APPLICATION PROGRAMMING INTERFACE ACCESS RIGHTS IN A PARALLEL FILE SYSTEM**

SUA SPONTE
WITHDRAWAL OF HOLDING OF ABANDONMENT

The request for withdrawal of the notice of abandonment, issued in error, filed November 7, 2005 is being treated as a petition under 37 CFR 1.181 for withdrawal of the holding of abandonment.

A review of the application reveals that a notice of abandonment was mailed to the applicant on October 31, 2005. The notice incorrectly indicated that the instant application was being held abandoned for failure to respond to the Office communication (Advisory Action) mailed on November 30, 2004. The notice of abandonment also indicates that the Examiner phoned to confirm that the application was abandoned (i.e. that no amendment had been filed in response to the Office action) however, the indication does not list an attorney *currently of record* and does not include an interview summary. Note, an amendment was filed on February 17, 2005, ***within the three months shortened statutory period set forth in the November 18, 2004 non-final Office action***. Accordingly, the amendment/response was timely filed.

In view of these facts, the abandonment of the application was clearly in error and is hereby **VACATED**.

The application is being forwarded to the Supervisory Legal Instruments Examiner with instructions to **WITHDRAW** the holding of abandonment, restore the instant application to pending status and to **ENTER** the response filed February 17, 2005. The application will then be forwarded to the Examiner of record for prompt action on the merits.

Inquiries to this decision may be directed to Special Programs Examiner Brian Johnson at (571) 272-3595.

Brian L. Johnson
Special Program Examiner
Technology Center 2100
Computer Architecture, Software, and Information Security

UNITED STATES PATENT AND TRADEMARK OFFICE

Commissioner for Patents
United States Patent and Trademark Office
P.O. Box 1450
Alexandria, VA 22313-1450
www.uspto.gov

BROWDY AND NEIMARK, P.L.L.C.
624 NINTH STREET, NW, SUITE 300
WASHINGTON, DC 20001-5303

COPY MAILED

AUG 30 2005

OFFICE OF PETITIONS

ON PETITION

In re Application of :
Irit Loy et al :
Application No. 09/887,550 :
Filed: June 25, 2001 :
Attorney Docket No. Loy=1 :

This is a decision on the petition under 37 CFR 1.137(b), filed July 21, 2005, to revive the above-identified application.

The petition is **GRANTED**.

The two-month period for filing an appeal brief in triplicate (accompanied by the fee required by 37 CFR 1.17(c)), runs from the date of this decision.

The above-identified application became abandoned for failure to reply in a timely manner to the final Office action mailed January 6, 2005, which set a shortened statutory period for reply of three (3) months. No extensions of time under the provisions of 37 CFR 1.136(a) were obtained. Accordingly, the above-identified application became abandoned on April 7, 2005.

An extension of time under 37 CFR 1.136 must be filed prior to the expiration of the maximum extendable period for reply. See In re Application of S., 8 USPQ2d 1630, 1631 (Comm'r Pats. 1988). Accordingly, since the $1020 extension of time submitted July 21, 2005 was subsequent to the maximum extendable period for reply, this fee is unnecessary and will be credited to petitioner's deposit account.

Telephone inquiries concerning this decision should be directed to Irvin Dingle at (571) 272-3210.

This matter is being forwarded to Technology Center AU 2192 for further processing.

Irvin Dingle
Petitions Examiner
Office of Petitions
Office of the Deputy Commissioner
for Patent Examination Policy

S/SECTOR

OIPE JC55 JAN 18 2002 PATENT & TRADEMARK OFFICE

CERTIFICATE OF MAILING

I hereby certify that this correspondence is being deposited with the United States Postal Service as first class mail in an envelope addressed to: **BOX MISSING PARTS,** Commissioner for Patents, Washington, DC 20231 on **November 15, 2001**

By: _____ / **Ruth Montalvo** Date: **11/15/01**

OIPE JC55 JAN 18 2002 PATENT & TRADEMARK OFFICE

IN THE UNITED STATES PATENT AND TRADEMARK OFFICE

Customer No.	026418		
Docket No.	JG-YY-5090 / 500569.20069		
Applicant(s):	Yoshihiko MAKINO, et al.		
Application No.:	09/887,625	Group:	1645
Filed:	June 22, 2001	Examiner:	
For:	METHOD OF DETECTING NUCLEIC ACIDS		

COPY OF PAPERS ORIGINALLY FILED

BOX MISSING PARTS
Commissioner for Patents
Washington, D. C. 20231

COMPLETION OF APPLICATION

Sir:

Applicant submits herewith the following in order to complete the above application:

(X) Executed Declaration and Power of Attorney;
( ) Verified English Translation;
( ) Applicant is entitled to claim Small Entity Status [See 37 CFR 1.27];
(X) Japanese Priority Document(s) No(s). 2000-187486 filed June 22, 2000, the priority(ies) of which is(are) claimed under 35 USC 119;
(X) Other: One month Extension of Time;
(X) Formalities Letter dated August 15, 2000 as required);
(X) Two checks in the amounts of $ 130.00 (Late Decl.) and $ 110.00 (Ext)
The Commissioner is hereby authorized to charge any other fees required with this submission to Deposit Account No: 50-1529.

With the filing of these documents, it is submitted that the application is now complete and in form for examination. Accordingly, such examination and favorable action are earnestly solicited.

Respectfully submitted,

November 15, 2001
Tel.No. (212) 521-5400

Jules E. Goldberg - Reg. No. 24,408
Reed Smith LLP
375 Park Avenue
New York, NY 10152

Enclosures:
- as listed above -

UNITED STATES PATENT AND TRADEMARK OFFICE

COMMISSIONER FOR PATENTS
UNITED STATES PATENT AND TRADEMARK OFFICE
WASHINGTON, D.C. 20231
www.uspto.gov

APPLICATION NUMBER	FILING/RECEIPT DATE	FIRST NAMED APPLICANT	ATTORNEY DOCKET NUMBER
09/887,625	06/22/2001	Yoshihiko Makino	JG-YY-5090 / 500569.20069

OIPE JC55
JAN 1 0 2002
PATENT & TRADEMARK OFFICE

CONFIRMATION NO. 7410

FORMALITIES LETTER

OC000000006426671

REED SMITH LLP
375 Park Avenue
New York, NY 10152

Date Mailed: 08/15/2001

NOTICE TO FILE MISSING PARTS OF NONPROVISIONAL APPLICATION

FILED UNDER 37 CFR 1.53(b)

Filing Date Granted

An application number and filing date have been accorded to this application. The item(s) indicated below, however, are missing. Applicant is given **TWO MONTHS** from the date of this Notice within which to file all required items and pay any fees required below to avoid abandonment. Extensions of time may be obtained by filing a petition accompanied by the extension fee under the provisions of 37 CFR 1.136(a).

- The oath or declaration is missing.
  A properly signed oath or declaration in compliance with 37 CFR 1.63, identifying the application by the above Application Number and Filing Date, is required.
- To avoid abandonment, a late filing fee or oath or declaration surcharge as set forth in 37 CFR 1.16(e) of $130 for a non-small entity, must be submitted with the missing items identified in this letter.
- **The balance due by applicant is $ 130.**

A copy of this notice MUST be returned with the reply.

COPY OF PAPERS ORIGINALLY FILED

Customer Service Center
Initial Patent Examination Division (703) 308-1202
PART 2 - COPY TO BE RETURNED WITH RESPONSE

01/24/2002 AWABI1 00000039 09887625
02 FC:105 130.00 OP

UNITED STATES PATENT AND TRADEMARK OFFICE

COMMISSIONER FOR PATENTS
UNITED STATES PATENT AND TRADEMARK OFFICE
WASHINGTON, D.C. 20231
www.uspto.gov

Paper No. 4

COPY MAILED

APR 17 2002

OFFICE OF PETITIONS

COATS & BENNETT, P.L.L.C.
PO BOX 5
RALEIGH, NC 27602

In re Application of
Carlsson et al.
Application No. 09/887,630
Filed: June 22, 2001
Attorney Docket No. 4015-955

DECISION ON PETITION

This is a decision on the "Request for Filing Receipt Correction," filed on August 27, 2001, requesting a corrected filing receipt for the above-identified application that contains the correct priority date of February 13, 2001, instead of February 14, 2001.[1] This Request is being treated as a petition under 37 CFR 1.10(c).

The petition is **DISMISSED AS MOOT.**

The instant application was filed on June 22, 2001. On July 16, 2001, Applicants filed a Preliminary Amendment which inserted a new paragraph in the June 22, 2001 Specification, thereby claiming benefit of U.S. provisional application No. 60/268,468 which had been filed on February 13, 2001.[2] A filing receipt mailed on August 14, 2001 indicates February 14, 2001 as the priority date under 35 U.S.C. 119(e).[3] The instant petition requests a corrected filing receipt showing February 13, 2001, rather than February 14, 2001, as the priority date.

The Office notes that, subsequent to the November 9, 2001 Decision according the February 13, 2001 filing date to provisional application No. 60/268,468,[4] the official records for the instant application were corrected accordingly. The petition is unnecessary and is dismissed as moot. A corrected filing receipt reflecting the February 13, 2001 priority date is attached as requested. No petition fee is owed.

This application is being forwarded to Technology Center 2600 for examination in due course.

Telephone inquiries concerning this Decision may be directed to Petitions Attorney RC Tang at (703) 308-0763.

Christina Donnell for

Beverly M. Flanagan
Supervisory Petitions Attorney
Office of Petitions
Office of the Deputy Commissioner
for Patent Examination Policy

---

[1] The Office sincerely apologizes for any inconvenience caused by the delay in processing the 8/27/01 Request.

[2] Provisional application No. 60/268,468 was originally accorded a filing date of 2/14/01, as indicated in a 6/24/01 filing receipt. However, a petition under 37 CFR 1.10(c) requesting a filing date of 2/13/01, filed on 7/16/01 for that provisional application, was granted on 11/9/01. Under 35 U.S.C. 119(e), a nonprovisional application is entitled to the benefit of an earlier-filed provisional application, i.e., it is treated as having been filed on the date the provisional application was filed, **if it contains or is amended to contain** specific reference to that earlier-filed provisional application. Thus, the 7/16/01 Preliminary Amendment filed for the instant application renders this application eligible, under 35 U.S.C. 119(e), for claiming benefit of the 2/13/01 filing date of provisional application No. 60/268,468.

[3] The petition under 37 CFR 1.10(c) was forwarded to the Office of Petitions, while the 8/14/01 filing receipt was generated by the Office of Initial Patent Examination (OIPE), based on the reference to the provisional application contained in the Preliminary Amendment, prior to the 11/9/01 Decision on the petition.

[4] See *supra* note 2.

UNITED STATES PATENT AND TRADEMARK OFFICE

COMMISSIONER FOR PATENTS
UNITED STATES PATENT AND TRADEMARK OFFICE
WASHINGTON, D.C. 20231
www.uspto.gov

Paper No. 22

CHRISTOPHER E. CHALSEN
MORGAN & FINNEGAN
345 PARK AVENUE
NEW YORK, NY 10154

COPY MAILED

SEP 18 2001

OFFICE OF PETITIONS

In re Application of
Ikeda et al.
Application No. 08/842,394
Filed: April 23, 1997
Attorney Docket No. 1232-4349

DECISION GRANTING PETITION

In re Application of
Ikeda et al.
Application No. 09/887,659
Filed: April 24, 2001
For: IMAGE SENSING APPARATUS, IMAGE PROCESSING APPARATUS AND IMAGE SENSING SYSTEM

This is a decision on petition under 37 CFR § 1.53(e) filed July 3, 2001, requesting that an improper Continued Prosecution Application (CPA) under 37 CFR § 1.53(d) be treated as an application under 37 CFR § 1.53(b) and be accorded a filing date of April 24, 2001.

On October 25, 2000, a nonfinal Office action was mailed in application No. 08/842,394, which set a three (3) month shortened statutory period for reply. In response, a petition for a three (3) month extension of time and a request for a CPA under 37 CFR § 1.53(d) based on prior application No. 08/842,394 were deposited on April 24, 2001. However, CPA practice no longer applies to applications, other than design applications, if the prior application was filed on or after May 29, 2000.[1] Accordingly, the CPA request was improper because the prior application was filed on or after May 29, 2000.

---

[1] An earlier CPA was filed in application No. 08/842,394 on August 7, 2000. Thus, 37 CFR 1.53(d)(1)(i) does not permit the filing of a further CPA.

In the event that an applicant files a request for a CPA of a utility or plant application that was filed on or after May 29, 2000 (to which CPA practice no longer applies), the Office will automatically treat the improper CPA as a request for continued examination of the prior application (identified in the request for CPA) under new 37 CFR § 1.114.

On May 4, 2001, a Notice of Improper Request For Continued Examination (RCE) was mailed, stating that the RCE was improper because continued examination under 37 CFR § 1.114 does not apply to an application unless prosecution in the application is closed. The Notice further indicated that if the RCE was <u>not</u> accompanied by a reply, the time period set forth in the last Office action continues to run from the mailing date of the action. Because applicants did not submit a reply to the nonfinal Office action with the RCE, the application became abandoned on April 26, 2001. A Notice of Abandonment was mailed on August 7, 2001.

On July 3, 2001, applicants filed the present petition under 37 CFR § 1.53(e). Applicants stated that they inadvertently filed a request for a CPA in the above-identified application instead of a continuation application under 37 CFR 1.53(b). Applicants requested that the improper CPA be converted to an application under 37 CFR § 1.53(b). With the present petition, applicants submitted a complete copy of the prior application, a copy of the executed declaration and power of attorney and assignment as filed, drawings, a preliminary amendment, and an authorization to charge the Deposit Account for the petition fee.

The petition is <u>granted</u>.

The application under 37 CFR 1.53(b) filed on April 24, 2001, has been assigned application No. 09/887,659. The CPA request, the present petition, the copy of the executed declaration and power of attorney and assignment as filed, drawings, and the preliminary amendment have been removed from the file of application No. 08/842,394 and have been placed in application No. 09/887,659. A copy of the CPA request and the present petition will be retained in application No. 08/842,394 to complete the record therein.

All further correspondence concerning the application under 37 CFR 1.53(b) should be directed to application No. 09/887,659 <u>not application No. 08/842,394.</u>

The Office finance records will be corrected to show that the $130.00 petition fee, the $710.00 filing fee, and the additional claim fees totaling $1,098.00 paid on April 24, 2001, were paid in application No. 09/887,659, not in application No. 08/842,394.

Application No. 08/842,394 will be forwarded to Files Repository.

Application No. 09/887,659 will be forwarded to the Office of Initial Patent Examination for further processing as an application filed under 37 CFR 1.53(b), not under 37 CFR 1.53(d), with a filing date of April 24, 2001, using the copy of the original application papers submitted on July 3, 2001.

Telephone inquiries concerning this matter may be directed to Petitions Attorney Christina T. Tartera at (703)306-5589.

Eugenia A. Jones

Eugenia A. Jones
Legal Advisor
Office of Patent Legal Administration
Office of the Deputy Commissioner
for Patent Examination Policy

CTT

UNITED STATES PATENT AND TRADEMARK OFFICE

Commissioner for Patents
United States Patent and Trademark Office
Washington, D.C. 20231
www.uspto.gov

PRAMOD ARORA
5144 PINCKNEYA DRIVE
NORTH ROYALTON, OH 44133

COPY MAILED

APR 19 2002

OFFICE OF PETITIONS

In re Application of
Arora, et al.
Application No. 09/887,661
Filed: August 3, 2001
Title: COMPOSITION WITH FILM FORMING ALKYLSILSESQUIOXANE POLYMER AND METHOD FOR APPLYING HYDROPHOBIC FILMS TO SURFACES

LETTER

Dear Mr. Arora:

You are named as a joint inventor in the above-identified United States patent application filed under the provisions of 35 U.S.C. 116 (United States Code) and 37 CFR 1.47(a), Rules of Practice in Patent Cases. Should a patent be granted on the application you will be designated therein as a joint inventor.

As a named inventor you are entitled to inspect any paper in the file wrapper of the application, order copies of all or any part thereof (at a prepaid cost per 37 CFR 1.19) or make your position of record in the application. Alternatively, you may arrange to do any of the preceding through a registered patent attorney or agent presenting written authorization from you. If you care to join the application, counsel of record (see below) would presumably assist you. Joining in the application would entail the filing of an appropriate oath or declaration by you pursuant to 37 CFR 1.63.

Telephone inquiries regarding this communication should be directed to Petitions Attorney Nancy Johnson at (703) 305-0309. Requests for information regarding your application should be directed to the File Information Unit at (703) 308-2733. Information regarding how to pay for and order a copy of the application, or a specific paper in the application, should be directed to Certification Division at (703) 308-9726 or 1-800-972-6382 (outside the Washington D.C. area).

Patricia Faison-Ball for

Beverly M. Flanagan
Supervisory Petitions Examiner
Office of Petitions
Office of the Deputy Commissioner
for Patent Examination Policy

Jones, Day, Reavis and Pogue
North Point
901 Lakeside Avenue
Cleveland, OH 44114

UNITED STATES PATENT AND TRADEMARK OFFICE

Commissioner for Patents
United States Patent and Trademark Office
Washington, D.C. 20231
www.uspto.gov

Paper No. 8

Jones, Day, Reavis and Pogue
North Point
901 Lakeside Avenue
Cleveland, OH 44114

COPY MAILED

APR 19 2002

OFFICE OF PETITIONS

In re Application of
Arora, et al.
Application No. 09/887,661
Filed: August 3, 2001
Title: COMPOSITION WITH FILM FORMING ALKYLSILSESQUIOXANE POLYMER AND METHOD FOR APPLYING HYDROPHOBIC FILMS TO SURFACES

DECISION ACCORDING STATUS UNDER 37 C.F.R. §1.47(a)

This is a decision on the "Petition Under 37 C.F.R. 1.47(a)," filed January 23, 2002.

The petition is **GRANTED**.

The above-identified application was filed on August 3, 2001 without an executed oath or declaration, but named Pramod Arora and Brij Singh as joint inventors. Accordingly, on October 9, 2001, a "Notice to File Missing Parts of Nonprovisional Application" was mailed, requiring an executed oath or declaration, and a surcharge for late filing. This Notice set a period for reply of two months from the mailing date of the notice.

On January 23, 2002, (certificate of mailing November 14, 2001), applicant responded filing a copy of a petition under §1.47(a) that applicant maintains was originally filed on August 1, 2001 (certificate of mailing date); a declaration for patent application signed by joint inventor Singh on behalf of himself and on behalf of non-signing inventor Arora; and payment of the surcharge for late filing.

Rule 47 applicant maintains that status under 37 C.F.R. §1.47(a) is proper because joint inventor Pramod Arora refuses to join in the application for patent. A grantable petition under 37 C.F.R. §1.47(a) requires: (1) proof that the non-signing inventor cannot be reached or refuses to sign the oath or declaration after having been presented with the application papers (specification, claims and drawings); (2) an acceptable oath or declaration in compliance with 35 U.S.C. §§ 115 and 116; (3) the petition fee; and (4) a statement of the last known address of the non-signing inventor.

Petitioner has shown that the non-signing inventor has refused to join in the filing of the above-identified application after

having been presented with the application papers. On petition, patent attorney H. Duane Switzer provides the last known address of inventor Arora and states that the inventor has been presented the application papers by certified mail and has refused to sign the declaration. Attorney Switzer has made of record a copy of the certified mail letter transmitting all of the application papers to the inventor, as well as, a copy of a letter from inventor Arora acknowledging receipt of the application papers and expressing his intent not to join in the application.

The declaration filed January 23, 2002, and the petition have been reviewed and found in compliance with 37 C.F.R. §1.47(a).

This application is hereby accorded Rule 1.47(a) status.

As provided in new Rule 1.47(c), this Office will forward notice of this application's filing to the non-signing inventor at the address given in the petition. Notice of the filing of this application will also be published in the Official Gazette.

The application file is being forwarded to Technology Center 1762 for examination in due course.

Telephone inquiries regarding this decision should be directed to Petitions Attorney Nancy Johnson at (703) 305-0309.

Patricia Larson Ball
for

Beverly M. Flanagan
Supervisory Petitions Examiner
Office of Petitions
Office of the Deputy Commissioner
for Patent Examination Policy

UNITED STATES PATENT AND TRADEMARK OFFICE

OIPE JC67
JUN 1 0 2004
PATENT & TRADEMARK OFFICE

Commissioner for Patents
United States Patent and Trademark Office
Washington, D.C. 20231
www.uspto.gov

Paper No. 8

Jones, Day, Reavis and Pogue
North Point
901 Lakeside Avenue
Cleveland, OH 44114

COPY MAILED

APR 1 9 2002

OFFICE OF PETITIONS

In re Application of Arora, et al. Application No. 09/887,661 Filed: August 3, 2001 Title: COMPOSITION WITH FILM FORMING ALKYLSILSESQUIOXANE POLYMER AND METHOD FOR APPLYING HYDROPHOBIC FILMS TO SURFACES	: : : : : : : : :	DECISION ACCORDING STATUS UNDER 37 C.F.R. §1.47(a)

This is a decision on the "Petition Under 37 C.F.R. 1.47(a)," filed January 23, 2002.

The petition is **GRANTED**.

The above-identified application was filed on August 3, 2001 without an executed oath or declaration, but named Pramod Arora and Brij Singh as joint inventors. Accordingly, on October 9, 2001, a "Notice to File Missing Parts of Nonprovisional Application" was mailed, requiring an executed oath or declaration, and a surcharge for late filing. This Notice set a period for reply of two months from the mailing date of the notice.

On January 23, 2002, (certificate of mailing November 14, 2001), applicant responded filing a copy of a petition under §1.47(a) that applicant maintains was originally filed on August 1, 2001 (certificate of mailing date); a declaration for patent application signed by joint inventor Singh on behalf of himself and on behalf of non-signing inventor Arora; and payment of the surcharge for late filing.

Rule 47 applicant maintains that status under 37 C.F.R. §1.47(a) is proper because joint inventor Pramod Arora refuses to join in the application for patent. A grantable petition under 37 C.F.R. §1.47(a) requires: (1) proof that the non-signing inventor cannot be reached or refuses to sign the oath or declaration after having been presented with the application papers (specification, claims and drawings); (2) an acceptable oath or declaration in compliance with 35 U.S.C. §§ 115 and 116; (3) the petition fee; and (4) a statement of the last known address of the non-signing inventor.

Petitioner has shown that the non-signing inventor has refused to join in the filing of the above-identified application after

having been presented with the application papers. On petition, patent attorney H. Duane Switzer provides the last known address of inventor Arora and states that the inventor has been presented the application papers by certified mail and has refused to sign the declaration. Attorney Switzer has made of record a copy of the certified mail letter transmitting all of the application papers to the inventor, as well as, a copy of a letter from inventor Arora acknowledging receipt of the application papers and expressing his intent not to join in the application.

The declaration filed January 23, 2002, and the petition have been reviewed and found in compliance with 37 C.F.R. §1.47(a).

This application is hereby accorded Rule 1.47(a) status.

As provided in new Rule 1.47(c), this Office will forward notice of this application's filing to the non-signing inventor at the address given in the petition. Notice of the filing of this application will also be published in the Official Gazette.

The application file is being forwarded to Technology Center 1762 for examination in due course.

Telephone inquiries regarding this decision should be directed to Petitions Attorney Nancy Johnson at (703) 305-0309.

Patricia Faison-Ball

for

Beverly M. Flanagan
Supervisory Petitions Examiner
Office of Petitions
Office of the Deputy Commissioner
for Patent Examination Policy

OIPE JC97
JUN 1 0 2004
PATENT & TRADEMARK OFFICE

PATENT

IN THE UNITED STATES PATENT AND TRADEMARK OFFICE

Applicants	:	Pramod K. Arora and Brij P. Singh
Serial No.	:	Unknown
Filed	:	Unknown
Title	:	COMPOSITION WITH FILM FORMING ALKYLSILSESQUIOXANE POLYMER AND METHOD FOR APPLYING HYDROPHOBIC FILMS TO SURFACES
Attorney Docket No.	:	495263010035

I hereby certify that this correspondence is being deposited today with the United States Postal Service as first class mail in an envelope addressed to: Assistant Commissioner for Patents Washington, D.C. 20231 on AUGUST 1, 2001

By: H. Duane Switzer

DECLARATION

H. Duane Switzer declares:

THAT he is an attorney in the State of Ohio and is registered to practice before the U.S. Patent and Trademark Office;

THAT he sent the attached letter dated June 26, 2001, to Pramod K. Arora with enclosed copies of formal papers and a patent application for a COMPOSITION WITH FILM FORMING ALKYLSILSESQUIOXANE POLYMER AND METHOD FOR APPLYING HYDROPHOBIC FILMS TO SURFACES;

THAT he received the attached email dated June 26, 2001, from Pramod K. Arora indicating that Mr. Arora would not sign the papers and would return the application;

THAT he received the application and unsigned formal papers from Mr. Arora on July 6, 2001;

THAT Pramod K. Arora contends that he is owed money by nanoFILM, Ltd. for patents, a contention that is denied by nanoFILM, Ltd.; and

THAT in his opinion, the conduct of Pramod K. Arora constitutes a refusal to sign the application papers.

I HEREBY DECLARE THAT all statements made herein of my own knowledge are true and that all statements made on information and belief are believed to be true; and further that these statements were made with the knowledge that wilful false statements and the like so made are punishable by fine or imprisonment, or both, under 18 U.S.C. 1001 and that such willful false statements may jeopardize the validity of the application or any patent issued thereon.

H Duane Switzer

H. Duane Switzer
Reg. No. 22,431

JONES, DAY, REAVIS & POGUE
NORTH POINT • 901 LAKESIDE AVENUE
CLEVELAND, OHIO 44114-1190
TELEPHONE: 216-586-3939 • FACSIMILE: 216-579-0212

WRITER'S DIRECT NUMBER:

June 26, 2001

216-586-7283
hswitzer@jonesday.com

495263-010-035

CERTIFIED MAIL NO. 7099 3400 0000 7911 0761
RETURN RECEIPT REQUESTED

Mr. Pramod K. Arora
5144 Pinckneya Drive
North Royalton, OH 44133

Re: Proposed U.S. Patent Application For:
COMPOSITION WITH FILM FORMING ALKYLSILSESQUIOXANE POLYMER AND METHOD FOR APPLYING HYDROPHOBIC FILMS TO SURFACES
Our File: 495263-010-035

Dear Mr. Arora:

Enclosed please find a patent application related to the solid state alkylsilsesquioxane polymers that you helped to develop while employed at nanoFILM. Copies of the literature and patents referred to in the patent specification are enclosed for your file.

Please review the application carefully and let me know of any changes that you consider appropriate. If the application is satisfactory, please sign and date all of the formal papers, and return them to me at your earliest convenience.

We would be pleased to answer any questions that you may have, and also remind you that this patent application and its subject matter are covered by the confidentiality agreement that you signed while employed by nanoFILM. Your cooperation is appreciated.

Very truly yours,

H Duane Switzer

H. Duane Switzer

Enclosures:
Application/Drawing
Formal Papers (Declaration & Power of Atty/Assignment)
Prior Art References

CL: 599667v1

"Pramod Arora"
<parora@core.com>

07/03/01 10:15 AM

To: <hswitzer@jonesday.com>
cc:
Subject: patent application 6/26/01

Dear Mr. Switzer,

It is my pleasure talking to you first time in my life. I am sorry that I could not get chance nor given a chance to communicate with you with patent related matters while employed at Nanofilm.

I am also sorry that I could not get back to you earlier as I was out of town for couple of days. Yesterday, my wife told me that you called and it was late to contact. I did received a patent application to review and was asked to sign. I do not have time to go through and to see what you have wrote.

In my earlier patent Brij has added his name in my work, which leads to patent. It seem that Brij and Scott decides whose name should be included in the patent without a inventor or attorney consent. Nanofilm also promised to pay me $3000 each patent once they get published or awarded. Now they have changed their policy and refused to pay me patent reward. I am seeking legal advice and therefore have no interest to go through this or any future patent to Nanofilm from my work. I do also fully understand that I will keep all subject matters confidential according to my employment agreement with Nanofilm.

If you have any question please reply to this e-mail and I will be very happy to discuss anything you might have.

Thanks,

Pramod Arora

P.S. I will return all documents file (which you sent on 6/26/01) to you tomorrow as it is not appropriate for me keep.

OIPE JC67
JUN 1 0 2004
PATENT & TRADEMARK OFFICE

PATENT

IN THE UNITED STATES PATENT AND TRADEMARK OFFICE

Applicants	:	Pramod K. Arora and Brij P. Singh
Serial No.	:	Unknown
Filed	:	Unknown
Title	:	COMPOSITION WITH FILM FORMING ALKYLSILSESQUIOXANE POLYMER AND METHOD FOR APPLYING HYDROPHOBIC FILMS TO SURFACES
Attorney Docket No.	:	495263010035

I hereby certify that this correspondence is being deposited today with the United States Postal Service as first class mail in an envelope addressed to: Assistant Commissioner for Patents Washington, D.C. 20231 on AUGUST 1, 2001

By: H Duane Switzer

PETITION UNDER 37 CFR 1.47(a)

Commissioner for Patents
Washington, D. C. 20231

Sir:

Acceptance of this application for filing under 37 CFR 1.47(a) is requested because one of the joint inventors, Pramod K. Arora, has refused to sign the Declaration.

This patent application has joint inventors Pramod K. Arora and Brij P. Singh, who invented the subject matter that is disclosed and claimed in the application while employed by nanoFILM, Ltd., an Ohio Limited Liability Company.

Brij P. Singh has signed a Declaration, Power of Attorney and Assignment for this patent application.

Pramod K. Arora no longer is employed by nanoFILM, Ltd., and has refused to join in this application for patent.

A copy of this application with formal papers for signature by Pramod K. Arora were sent to Pramod K. Arora by H. Duane Switzer with a letter dated June 26, 2001. TAB A

Pramod K. Arora replied to H. Duane Switzer by an email dated June 26, 2001, indicating that Mr. Arora had "no interest to go through this or any future patent to Nanofilm, Ltd. from my work." TAB B Mr. Arora then returned the application and formal papers to H. Duane Switzer by priority mail.

Pramod K. Arora resigned his employment with nanoFILM, Ltd. by a letter dated September 19, 2000, to Brij Singh, Vice President, Technology, for nanoFILM, Ltd. TAB C

By a letter dated September 22, 2000, Brij Singh responded to Pramod K. Arora's contentions concerning payments for patents. TAB D

Caryn M. Groedel, attorney for Pramod K. Arora, sent a letter dated July 10, 2001, to Scott Rickert, President of nanoFILM, Ltd., demanding payment for Mr. Arora's patents and threatening litigation. TAB E

Copies of assignments to nanoFILM, Ltd. that are recorded in the U.S. Patent and Trademark Office for other patent applications filed by Pramod K. Arora are attached. TAB F

The last known address for Pramod K. Arora is 5144 Pinckneya Drive, North Royalton, Ohio 44133.

Respectfully submitted,

H. Duane Switzer

H. Duane Switzer
Reg. No. 22,431
Jones, Day, Reavis & Pogue
North Point
901 Lakeside Avenue
Cleveland, Ohio 44114-1190
216-586-7283

JONES, DAY, REAVIS & POGUE
NORTH POINT • 901 LAKESIDE AVENUE
CLEVELAND, OHIO 44114-1190
TELEPHONE: 216-586-3939 • FACSIMILE: 216-579-0212

WRITER'S DIRECT NUMBER:

June 26, 2001

216-586-7283
hswitzer@jonesday.com

495263-010-035

CERTIFIED MAIL NO. 7099 3400 0000 7911 0761
RETURN RECEIPT REQUESTED

Mr. Pramod K. Arora
5144 Pinckneya Drive
North Royalton, OH 44133

Re: Proposed U.S. Patent Application For:
COMPOSITION WITH FILM FORMING ALKYLSILSESQUIOXANE POLYMER AND METHOD FOR APPLYING HYDROPHOBIC FILMS TO SURFACES
Our File: 495263-010-035

Dear Mr. Arora:

Enclosed please find a patent application related to the solid state alkylsilsesquioxane polymers that you helped to develop while employed at nanoFILM. Copies of the literature and patents referred to in the patent specification are enclosed for your file.

Please review the application carefully and let me know of any changes that you consider appropriate. If the application is satisfactory, please sign and date all of the formal papers, and return them to me at your earliest convenience.

We would be pleased to answer any questions that you may have, and also remind you that this patent application and its subject matter are covered by the confidentiality agreement that you signed while employed by nanoFILM. Your cooperation is appreciated.

Very truly yours,

H Duane Switzer

H. Duane Switzer

Enclosures:
Application/Drawing
Formal Papers (Declaration & Power of Atty/Assignment)
Prior Art References

Under the Paperwork Reduction Act of 1995, no persons are required to respond to a collection of information unless it contains a valid OMB control number.

DECLARATION FOR UTILITY OR DESIGN PATENT APPLICATION (37 CFR 1.63)

[X] Declaration Submitted with Initial Filing OR [ ] Declaration Submitted after Initial Filing (surcharge (37 CFR 1.16 (e)) required)

Attorney Docket Number	495263010035
First Named Inventor	Pramod K. Arora
COMPLETE IF KNOWN	
Application Number	/
Filing Date	
Group Art Unit	
Examiner Name	

As a below named inventor, I hereby declare that:

My residence, mailing address, and citizenship are as stated below next to my name.

I believe I am the original, first and sole inventor (if only one name is listed below) or an original, first and joint inventor (if plural names are listed below) of the subject matter which is claimed and for which a patent is sought on the invention entitled:

COMPOSITION WITH FILM FORMING ALKYLSILSESQUIOXANE POLYMER AND METHOD FOR APPLYING HYDROPHOBIC FILMS TO SURFACES

(Title of the Invention)

the specification of which

[X] is attached hereto

OR

[ ] was filed on (MM/DD/YYYY) [ ] as United States Application Number or PCT International Application Number [ ] and was amended on (MM/DD/YYYY) [ ] (if applicable).

I hereby state that I have reviewed and understand the contents of the above identified specification, including the claims, as amended by any amendment specifically referred to above.

I acknowledge the duty to disclose information which is material to patentability as defined in 37 CFR 1.56, including for continuation-in-part applications, material information which became available between the filing date of the prior application and the national or PCT international filing date of the continuation-in-part application.

I hereby claim foreign priority benefits under 35 U.S.C. 119(a)-(d) or (f), or 365(b) of any foreign application(s) for patent, inventor's or plant breeder's rights certificate(s), or 365(a) of any PCT international application which designated at least one country other than the United States of America, listed below and have also identified below, by checking the box, any foreign application for patent, inventor's or plant breeder's rights certificate(s), or any PCT international application having a filing date before that of the application on which priority is claimed.

Prior Foreign Application Number(s)	Country	Foreign Filing Date (MM/DD/YYYY)	Priority Not Claimed	Certified Copy Attached? YES	NO
			[ ]	[ ]	[ ]
			[ ]	[ ]	[ ]
			[ ]	[ ]	[ ]
			[ ]	[ ]	[ ]

[ ] Additional foreign application numbers are listed on a supplemental priority data sheet PTO/SB/02B attached hereto:

Burden Hour Statement: This form is estimated to take 21 minutes to complete. Time will vary depending upon the needs of the individual case. Any comments on the amount of time you are required to complete this form should be sent to the Chief Information Officer, U.S. Patent and Trademark Office, Washington, DC 20231. DO NOT SEND FEES OR COMPLETED FORMS TO THIS ADDRESS. SEND TO: Assistant Commissioner for Patents, Washington, DC 20231.

PTO/SB/01 (03-01)
Approved for use through 10/31/2002. OMB 0651-0032
U.S. Patent and Trademark Office; U.S. DEPARTMENT OF COMMERCE
Under the Paperwork Reduction Act of 1995, no persons are required to respond to a collection of information unless it contains a valid OMB control number.

DECLARATION — Utility or Design Patent Application

Direct all correspondence to: [X] Customer Number or Bar Code Label [ ] OR [X] Correspondence address below

Name: H. Duane Switzer
Jones, Day, Reavis & Pogue

Address: North Point
901 Lakeside Avenue

City: Cleveland | State: OH | ZIP: 44114-1190

Country: US | Telephone: 216-586-7283 | Fax: 216-579-0212

I hereby declare that all statements made herein of my own knowledge are true and that all statements made on information and belief are believed to be true; and further that these statements were made with the knowledge that willful false statements and the like so made are punishable by fine or imprisonment, or both, under 18 U.S.C. 1001 and that such willful false statements may jeopardize the validity of the application or any patent issued thereon.

NAME OF SOLE OR FIRST INVENTOR: [ ] A petition has been filed for this unsigned inventor

Given Name (first and middle [if any]): PRAMOD K. | Family Name or Surname: ARORA

Inventor's Signature | Date

Residence: City: North Royalton | State: OH | Country: US | Citizenship: India

Mailing Address: 5144 Pinckneya Drive

City: North Royalton | State: OH | ZIP: 44133 | Country: US

NAME OF SECOND INVENTOR: [ ] A petition has been filed for this unsigned inventor

Given Name (first and middle [if any]): BRIJ P. | Family Name or Surname: SINGH

Inventor's Signature | Date

Residence: City: North Royalton | State: OH | Country: US | Citizenship: US

Mailing Address: 13010 Morning Star Drive

City: North Royalton | State: OH | ZIP: 44133 | Country: US

[ ] Additional inventors are being named on the ____supplemental Additional Inventor(s) sheet(s) PTO/SB/02A attached hereto.

Please type a plus sign (+) inside this box → [+]

PTO/SB/81 (02-01)

Approved for use through 10/31/2002. OMB 0651-0035

U.S. Patent and Trademark Office; U.S. DEPARTMENT OF COMMERCE

Under the Paperwork Reduction Act of 1995, no persons are required to respond to a collection of information unless it display a valid OMB control number.

POWER OF ATTORNEY OR AUTHORIZATION OF AGENT

Application Number	
Filing Date	
First Named Inventor	Pramod K. Arora
Title	
Group Art Unit	
Examiner Name	
Attorney Docket Number	495263010035

24325

PATENT TRADEMARK OFFICE

I hereby appoint:

[X] Practitioners at Customer Number 24325

OR

[ ] Practitioner(s) named below:

Name	Registration Number

as my/our attorney(s) or agent(s) to prosecute the application identified above, and to transact all business in the United States Patent and Trademark Office connected therewith.

Please change the correspondence address for the above-identified application to:

[ ] The above-mentioned Customer Number.

OR

[ ] Practitioners at Customer Number [ ] → *Place Customer Number Bar Code Label here*

OR

[ ] Firm or Individual Name					
Address					
Address					
City		State		Zip	
Country					
Telephone		Fax			

I am the:

[X] Applicant/Inventor.

[ ] Assignee of record of the entire interest. See 37 CFR 3.71.
Statement under 37 CFR 3.73(b) is enclosed. (Form PTO/SB/96).

SIGNATURE of Applicant or Assignee of Record

Name	Pramod K. Arora
Signature	X
Date	X

NOTE: Signatures of all the inventors or assignees of record of the entire interest or their representative(s) are required. Submit multiple forms if more than one signature is required, see below*.

[X] *Total of 2 forms are submitted.

Burden Hour Statement: This form is estimated to take 3 minutes to complete. Time will vary depending upon the needs of the individual case. Any comments on the amount of time you are required to complete this form should be sent to the Chief Information Officer, U.S. Patent and Trademark Office, Washington, DC 20231. DO NOT SEND FEES OR COMPLETED FORMS TO THIS ADDRESS. SEND TO: Assistant Commissioner for Patents, Washington, DC 20231.

DOCKET NO. 495263010035

JOINT

ASSIGNMENT

In consideration of One Dollar and other good and valuable consideration, receipt of which is hereby acknowledged, I, **PRAMOD K. ARORA**, ("ASSIGNOR"), a citizen of India, residing in North Royalton, Ohio, hereby sell, transfer, set over and assign unto **nanoFILM, Ltd.** ("ASSIGNEE"), an Ohio Limited Liability Company of the State of Ohio, having a principal place of business at 10111 Sweet Valley Drive, Valley View, Ohio 44125-4250, its successors, assigns, nominees, or other legal representatives, the entire worldwide right, title and interest in and to the invention **COMPOSITION WITH FILM FORMING ALKYLSILSESQUIOXANE POLYMER AND METHOD FOR APPLYING HYDROPHOBIC FILMS TO SURFACES** invented jointly by me and **BRIJ P. SINGH,** and the application for United States patent therefor, executed concurrently herewith, and all original and reissued patents granted therefor, and all divisions and continuations thereof, including the subject matter of any and all claims which may be obtained in every such patent, and the right to apply for and obtain patents in countries foreign to the United States, and in and to any Letters Patent which may be granted thereon in such foreign countries, and authorize and request the Commissioner of Patents and Trademarks of the United States, and any official of any country or countries foreign to the United States whose duty it is to issue patents on applications as aforesaid, to issue the said Letters Patent to the said ASSIGNEE, its successors, assigns, nominees or other legal representatives, as assignee and owner of the entire interest, and covenant that I have full right to convey the entire interest herein assigned and that I have not executed and will not execute any agreement in conflict herewith, and agree that I will communicate to said ASSIGNEE, its successors, assigns, nominees or other legal representatives, all facts known to me respecting said invention, whenever requested, and testify in any legal proceedings, sign all lawful papers, execute and deliver all divisional, continuing and reissue applications, make lawful papers, execute and deliver all divisional, continuing and reissue applications, make all rightful oaths and do all lawful acts requisite for the application for such divisional, continuing or reissue applications, or the procuring thereof, and that if and when said ASSIGNEE, its successors, assigns, nominees or other legal representatives desire to file a disclaimer relating thereto I will, upon request, sign and deliver all

lawful papers requisite for the filing of such disclaimer, and I further covenant and agree that I will, at any time upon request, do everything legally possible to aid said ASSIGNEE, its successors, assigns, nominees or other legal representatives, either in its or my own name, to apply for, obtain and enforce proper patent protection in all countries, including priority rights granted to patents in foreign countries according to all the laws and treaties in force, all without further consideration but at the expense of said ASSIGNEE, its successors, assigns, nominees or other legal representatives.

_____
Pramod K. Arora

STATE OF OHIO)
)SS.
COUNTY OF_____)

This _____ day of _____, 2001 before me personally came the above-named Pramod K. Arora, to me personally known as the individual who executed the foregoing Assignment, and who acknowledged to me that he executed the same of his own free will for the purpose therein set forth.

_____
Notary Public

(SEAL)

COMPOSITION WITH FILM FORMING ALKYLSILSESQUIOXANE POLYMER AND METHOD FOR APPLYING HYDROPHOBIC FILMS TO SURFACES

RELATED APPLICATIONS

This application claims subject matter disclosed in U.S. provisional application Serial No. 60/241,504 filed October 18, 2000, the benefit of the filling date of which is hereby claimed.

BACKGROUND OF THE INVENTION

This application relates to the art of film forming compositions and to methods for applying films to substrates. The invention is particularly applicable to film forming compositions that contain solid state alkylsilsesquioxane polymers and to methods for applying such polymers to substrates, and will be described with particular reference thereto. However, it will be appreciated that the application has broader aspects and that at least certain features can be used with other polymers and methods.

Polymerizable amphiphilic molecules having the intrinsic ability to self-assemble into a thin film are well known in both solution phase and gas phase. By way of example, descriptions of such materials and their ability to form thin films are contained in: W.C. Bigelow et al, J. Colloid. Sci., 1,513-538 (1946); L.H. Lee, J. Colloid. & Interface Sci., 27, 751-760 (1968); E.E. Polymeropoulos et al, J. Chem. Phys., 69, 1836-1847 (1978); J. Sagiv, U.S. Patent No. 4,539,061; J. Phys. Chem. 70, 2937 (1966); Trans. Faraday. Soc., 63, 2549 (1967); J. Phys. Chem., 73, 2372 (1969); Langmuir, 7, 923 (1991); Langmuir, 9, 3518 (1993) and Langmuir, 13, 1877 (1997).

Disclosures of molecular beam deposition of coatings on substrates are found in the following U.S. patents: 4,001,858; 4,181,544; 4,330,360; 4,681,773; 4,800,100; and 5,064,520. The disclosures of these publications and patents are hereby incorporated herein by reference. Compositions and methods for applying hydrophobic ultra thin films of self-assembling amphiphilic molecules to substrates are described in commonly assigned U.S. Patent Nos. 5,078,791; 5,166,000; 5,173,365; 5,204,126; 5,219,654; 5,300,561; 5,766,698; and 5,897,918. The disclosures of these patents are hereby incorporated herein by reference.

Use of the compositions and methods disclosed in the above literature and patents typically results in the formation of a mono-layer thin film on a substrate surface. Inter-molecular interactions in both solution phase and gas phase under a low vacuum make it difficult to use these compositions and methods to form multi-layer films. In addition, the use of these compositions requires cleaning of the substrate surface and/or the vacuum chamber after formation of the film.

Compositions and methods disclosed in the above literature and patents are very sensitive to moisture, and require special packaging, handling and processing. These prior art processes also expose the entire substrate surface to the film forming substance and result in a film over the entire surface of the substrate. There is no choice of selecting a certain substrate surface or shape for film formation other than by masking.

In the compositions and methods disclosed in the above literature and patents, highly reactive self-assembling amphiphilic monomer substances are used to form the films. It would be desirable if these

monomers could be partially polymerized to reduce their high reactivity to moisture while still being capable of acting as self-assembling amphiphilic molecules to form thin films.

Compositions with organic polymer molecules and self-assembling amphiphilic polymer substances for use in forming multi-layer thin films have been reported in the literature. By way of example, silsesquioxanes made from different monomer silanes and alkylsilanes are disclosed in Chem. Rev., 95 1431-1442 (1995) and Chem. Rev., 95, 1409-1430 (1995), and references cited therein and in J. Am. Chem. Soc., 119, 3135-3143 (1997). The disclosures of these publications are hereby incorporated herein by reference.

Methods for applying multi-layer thin films of organic polymers and self-assembling amphiphilic polymer substances inside ultra high vacuum chambers are known in the fields of optoelectronics, flat panel displays, thin film transistors and lasers as disclosed in J. Am. Chem. Soc., 120, 8563-8564 (1998) and Chem. Rev., 97, 1793-1896 (1997), and references cited therein. The disclosures of these publications are hereby incorporated herein by reference.

Use of the above methods and compositions requires the use of materials having extremely high purity. Therefore, a very complicated purification procedure is required that includes the use of a vacuum chamber at an ultra high vacuum of 1×10^{-7} to 1×10^{-11} torr.

It would be desirable to have a process and composition for use in applying hydrophobic thin films of self-assembling amphiphilic polymer substances to surfaces in a manner that is very fast, efficient and cost

effective. It also would be desirable to have a process that is capable of coating only one surface at a time with a film of controlled thickness. It also would be desirable to have a process that could be used at a much lower vacuum than the ultra high vacuum mentioned in the previous references. It also would be desirable to have a process where cleaning of the excess coating material inside the vacuum chamber automatically takes place during the coating process. It would be desirable to have a coating composition of self-assembling amphiphilic polymer substances that is easy to handle and use. It also would be desirable to have a composition that is very stable at room temperature and humidity, and does not require special protection from temperature or moisture. It would be yet another desirable characteristic to have a composition and process that is user friendly and environmentally safe. It would be another desirable characteristic to have a composition and process in which a single component material of very high purity is not required. It further would be desirable to have a coating composition that is easy to dispose of after it has been used.

SUMMARY OF THE INVENTION

In accordance with the present application a stable solid state coating composition includes a solid state film forming polymer having self-assembling amphiphilic molecules. In one arrangement, the film forming polymers are alkylsilsesquioxanes which are prepared in accordance with known procedures, such as disclosed in J. Am. Chem. Soc., 119, 3135-3143 (1997), the disclosure of which is hereby incorporated herein by reference.

A pure film forming substance in accordance with the present application evaporates very rapidly when heated and this makes it difficult to control the thickness of a film that is formed by the evaporated molecules. Therefore, the film forming substance preferably is mixed with an inert carrier, such as a metal oxide, that is stable at high temperatures and does not react with moisture or with the film forming substance.

The composition of film forming polymer powder mixed with a metal oxide powder is compressed into a tablet or compressed into a metal cup. The film forming polymer preferably is 10-50% by weight of the composition.

The amount of film forming substance in the composition that is compressed into a tablet or compressed into a metal cup usually is in the range of 0.5 to 5.0 grams, and more preferably 0.5 to 1.0 grams. Obviously, larger or smaller amounts may be used for some purposes.

When a metal cup is used and packed with compressed composition according to the present application, the volume of the cup usually is 0.5 to 2.0 milliliters. Obviously, other sizes may be used for some purposes.

A substrate is coated with a thin film of amphiphilic molecules in accordance with the present application by placing the composition of the present application in a vacuum chamber with a substrate to be coated. A high vacuum of 1×10^{-4} to 1×10^{-6} torr is established and maintained within the vacuum chamber during the coating process. When the desired vacuum is established, the composition is heated within the vacuum chamber to evaporate the film forming substance from a solid state to a vapor state by

sublimation. The evaporated material forms a molecular beam of amphiphilic molecules that settle on the substrate surface and self-assemble into a continuous thin film that bonds to the substrate surface. The thickness of the film is controlled by the evaporation rate of the film forming substance and time.

A variety of different substrate materials can be coated with thin films of amphiphilic polymer molecules by using the method and composition of the present application. Suitable substrate materials include, but are not necessarily limited to, glass, ceramic, porcelain, plastics, glass or plastic lenses, glass slides, sun glasses, safety glasses, precision optical parts, lenses with anti-reflective coatings, or flat sheets or other surfaces, and certain polished metal surfaces such as silicon, aluminum, germanium, chromium, titanium and zirconium.

It is a principal object of the present invention to provide an improved coating composition that contains a solid state film forming substance of amphiphilic molecules for use in providing hydrophobic thin films on substrate surfaces.

It is also a principal object of the invention to provide an improved method for providing hydrophobic thin films on substrate surfaces.

It is another object of the invention to provide a method that permits coating of substrate surfaces one side at a time.

It is a further object of the invention to provide a method that can be used to provide substrate surfaces with multi-layer self-assembled films of controlled thickness.

It is also an object of the invention to provide a method that does not require an ultra high vacuum.

It is an additional object of the invention to provide a composition of the type described that is easy to handle, transport and use.

It is another object of the invention to provide such a composition that is very stable at normal temperature and humidity.

It is yet another object of the invention to provide a method and composition that is user friendly and environmentally safe.

It is also an object of the invention to provide a method wherein excess coating material is removed from the vacuum chamber during the coating process.

It is also an object of the present invention to provide a coating composition that is easy and safe to dispose of.

It is also an object of the invention to use a mixture of amphiphilic polymers to create good hydrophobic films on surfaces.

BRIEF DESCRIPTION OF THE DRAWING

The drawing is a diagrammatic illustration of a vacuum chamber in which the coating method of the present application as carried out.

DESCRIPTION OF REPRESENTATIVE EMBODIMENTS

It will be understood that the explanations provided herein are for purposes of disclosing representative embodiments of the invention and not for purposes of limiting same.

As used in the context of this application, a film forming substance is one containing amphiphilic polymeric molecules that are capable of self-assembly on a substrate surface and of bonding thereto by virtue of the high affinity that the polar groups in the polymeric molecules have for the polar groups on the substrate surface. An amphiphile contains a polar region and a non-polar region, and amphiphiles that can be used to form film in accordance with the present application include, but are not necessarily limited to, the following:

The polar segment of the amphiphile can be a corboxylic acid, alcohols, thiols, amides, primary, secondary, tertiary amines, silane derivatives and sulfonates.

The non-polar or apolar component typically consists mainly of alkyl and alkyl ether or fluorinated alkyl and alkyl ether groups. The alkyl chain also may have other polymerizable moieties in it.

In one arrangement, the film forming substance is prepared by the hydrolysis and polymerization of monomers using known procedures as disclosed in the aforementioned literature. The typical monomers used in the present application consist essentially of RmSiXn where the non-polar R is a substituted silane or siloxane, or an alkyl, a per-fluorinated alkyl, an alkyl ether, or a per-fluorinated alkyl ether group of 6-20 carbon atoms and most preferably 10-20 carbon atoms, where X is selected from the group consisting of halogens, hydroxy, alkoxy and acetoxy groups, and where m is 1-3, n is 1-3 and m+n equal 4.

In another example, the monomer used to make the stable solid state film forming alkylsilsesquioxane polymer is RmSiXn, where R is C_{18}, X is an ethoxy group, m is 1-3, n is 1-3 and m+n equal 4.

By way of example, octadecyltrichlorosilane is used to make a stable solid state film forming amphiphilic polymer substance. Octadecyltrichlorosilane is added dropwise to a stoichometric excess of water held at about 5°C and with good stirring. In the beginning, the material hydrolyzes and suspends in the water solution. After about 15 minutes it rises to the top of the water as a white flaky material and is left standing for 30-45 minutes. The precipitate is collected by suction filtration, thoroughly washed with water to remove residual hydrochloric acid, and dried under a vacuum at room temperature which usually is in the range of 18-32°C. A mixture of different siloxane polymers is obtained as mentioned in the literature, and the polymers still have some unreacted active hydroxy groups.

The white flaky material is then heated at 160-180°C for 1 hour at a vacuum not lower than 1×10^{-2} to 5×10^{-2} torr. A lower vacuum would be 1×10^{-1} torr, and higher vacuums would be 1×10^{-3} to 1×10^{-7}. During this process, most of the residual water and possibly the water between different polymer layers is removed. This step is necessary to obtain a polymer that provides a very uniform film deposition rate in the high vacuum process. Without this dehydration step, the deposition rate is not constant due to the release of excess water from the substance during the coating process. However, it is not desirable to obtain nearly 100% dehydration as might be obtained if the vacuum and/or temperature are too high, or if the dehydration time is too long.

The cooled solid polymer material is crushed to a fine powder and mixed with an inert binder such as a metal oxide powder to obtain a homogeneous mixture. Titanium dioxide powder, such as P25 available from Degussa Corporation, is a suitable binder. Other binders that may be useable include silica and alumina. The important characteristic of the binder is that it should be one that does not react to moisture or with the film forming substance, and is stable at high temperatures of 300°C and greater so that it does not evaporate when the composition is heated to evaporate the film forming polymer by sublimation.

The thoroughly mixed polymer powder and metal oxide powder are combined so that the polymer powder is 10-50% by weight of the composition, more preferably 20-40% by weight of the composition, and most preferably 25-30% by weight of the composition. The homogeneous mixture is compressed into a tablet or placed in a container such as a small metal cup and compressed therein. The tablet or the homogeneous mixture compressed into the cup is used inside the vacuum chamber for coating substrates with thin films. The metal cup may be of such metals as copper, aluminum and tin, but is not necessarily limited thereto.

In the method of the present application, substrates to be coated are placed inside the vacuum chamber, along with the composition of the present application, and a high vacuum of 1×10^{-4} to 1×10^{-6} torr is established inside the vacuum chamber. The substrate preferably is rotated while the composition is heated to evaporate the solid state film forming substance by sublimation. This establishes a molecular beam of amphiphilic molecules which settle on the substrate surface and attach or bond thereto by

crucible within the vacuum chamber and similarly heated to evaporate the solid state film forming substance by sublimation. Preferably, neither the substrate nor the vacuum chamber are heated before or during the deposition process, and the only heat produced within the chamber is that used to evaporate the film forming substance. Thus, the temperature within the vacuum chamber during the entire process normally is well below 100°C.

The drawing shows a typical vacuum chamber A having a suitable door for providing access to the interior 10 thereof in a known manner. A conduit 12 communicating with the vacuum chamber interior 10 is connected with a vacuum pump for establishing and maintaining a desirable vacuum within the vacuum chamber.

A rotatable shaft 14 extends through a packing gland 16 to interior 10 of chamber A and has a mechanical gripping device 18 thereon for gripping the outer periphery of a substrate B. Any of the known mechanical clips and holders may be used for holding one or more substrates to be coated, as well as vacuum holders in which one or more substrates, such as lenses, are held to a rotatable support by a vacuum acting on the rear surfaces of the substrates, the vacuum being applied through a hollow shaft 14 and a plurality of spaced-apart ports in a hollow disc holder.

A metal cup 20 containing the composition of the present application, or a crucible holding a composition tablet, is positioned on a support 22 having a suitable heater associated therewith for heating the composition to a temperature of 100-300°C and more preferably 150-200°C. After establishing a desirable vacuum of 1×10^{-4} to 1×10^{-6} torr in the vacuum chamber, the heater is energized and the solid state film forming substance in

way of covalent bonding, hydrogen bonding and/or van der Waals forces while self-assembling into a continuous thin film. The rate of the deposition is set at 0.1-1.0 nm/sec by controlling the heat and evaporation rate, and is monitored by the use of an optical balance located within the vacuum chamber or by other deposition rate monitors such as a vacuum microbalance or quartz-crystal oscillator. A multi-layer thin film having a uniform thickness of 3-100 nm may be obtained. When the film has reached the desired thickness, heating of the coating composition is stopped and the chamber is vented so that the coated substrates can be removed. This method provides a very uniform hydrophobic thin film on substrate surfaces.

The method of the present application may be used to provide a thin film over other coatings such as anti-reflective coatings and mirror coatings. For example, the composition of the present application may be placed within a vacuum chamber at the same time as a composition for forming an anti-reflective coating or a mirror coating. The anti-reflective or mirror coating is first evaporated to provide the substrates, such as lenses, with an anti-reflective or mirror coating. The composition of the present application then is evaporated to provide a continuous thin film over the anti-reflective coating or mirror coating. Thus, the substrate is sequentially coated with different films without removing it from the vacuum chamber.

A vacuum chamber used to practice the method of the present application may be of the type manufactured by Satis, Denton or Zeiss for use in depositing anti-reflective coatings on lenses. The metal cup containing the composition may be heated with an electron beam gun, a resistance heater, an induction heater or another heat source. The tablet may be placed in a

the composition evaporates by sublimation to form a molecular beam 24 of amphiphilic molecules which settle on substrate surface 26 that faces toward the source 20 of the molecular beam. The opposite surface 28 of the substrate B is not coated with the film forming substance. The amphiphilic molecules settle on substrate surface 26 and bond thereto as by covalent bonding, hydrogen bonding and/or van der Waals forces while simultaneously self-assembling into a continuous thin film. The operation is continued for a period required to form a desired film thickness. the chamber is then vented and the coated substrates are removed.

Controlling the heat source used to evaporate the film forming substance controls the evaporation rate which in turn controls the deposition rate of the amphiphilic molecules on the substrate surface. The percent of film forming substance in the composition also may be varied to vary the evaporation and deposition rates.

The substrate preferably is located between the source of the molecular beam and the vacuum port with the surface to be coated facing toward the molecular beam so that the molecules in the beam engage the substrate surface as they travel toward the vacuum port. The substrate is rotated at a rate of one revolution per 1-10 seconds (6-60 revolutions per minute), and more preferably one revolution per 2-5 seconds (12-30 revolutions per minute). Removal of excess coating material from the substrate or the vacuum chamber is not necessary. The used composition cup or tablet is simply removed and replaced for coating a new batch of substrates.

By way of example, the film forming substance that is made from RmSiXn may be one in which R is an alkyl chain containing 12 carbon

atoms and X is Cl. R also may be a per fluorinated alkyl group containing 12 carbon atoms. R also may be a per fluorinated alkyl chain with X being chloride. R also may be an alkyl chain with 16 carbon atoms. A mixture of different monomers containing alkyl chains ranging from 6 to 12 carbon atoms may be hydrolyzed to provide a film forming substance that is a mixture of different materials that are then mixed with an inert binder powder. Durable and uniform films with excellent hydrophobic properties are obtained using such materials.

Although the invention has been shown and described with reference to representative embodiments, it is obvious that alterations and modifications will occur to others skilled in the art upon reading and understanding of this application. Therefore, it is to be understood that the invention may be practiced otherwise than as specifically described herein while remaining within the scope of the claims.

We Claim:

1. A composition that includes a solid state film forming alkylsilsesquioxane polymer and an inert binder.

2. The composition of claim 1 wherein said solid state film forming alkylsilsesquioxane polymer comprises 10-50% by weight of said composition.

3. The composition of claim 1 pressed into a tablet.

4. The composition of claim 1 pressed into a metal cup.

5. The composition of claim 1 wherein said solid state film forming alkylsilsesquioxane polymer is derived from RmSiXn where the non-polar R is a substituted silane or siloxane, an alkyl, a per-fluorinated alkyl, an alkyl ether, or a per-fluorinated alkyl ether group of 6-20 carbon atoms and most preferably 10-20 carbon atoms, where X is selected from the group consisting of halogens, hydroxy, alkoxy and acetoxy groups, and where m is 1-3, n is 1-3 and m+n equal 4.

6. The composition of claim 1 wherein said solid state film forming alkylsilsesquioxane polymer is derived from RmSiXn, where R is C_{18}, X is an ethoxy group, m is 1-3, n is 1-3 and m+n equal 4.

7. The composition of claim 1 wherein said solid state film forming alkylsilsesquioxane polymer is derived from alkylsilanes.

8. The composition of claim 1 wherein said solid state film forming alkylsilsesquioxane polymer is derived from RmSiXn where R is an alkyl and alkyl ether or a fluorinated alkyl and fluorinated alkyl ether chain containing C6-C20, where X is C1, Br, I, an alkoxy group or an acetoxy group, and where m is 1-3, n is 1-3 and m+n equal 4.

9. The composition of claim 1 wherein said solid state film forming alkylsilsesquioxane is derived from octadecyltrichlorosilane.

10. The composition of claim 1 wherein said binder includes one or more of titanium dioxide, silica and alumina.

11. The composition of claim 1 wherein said binder comprises metal oxide powder.

12. A composition containing a metal oxide powder and 10-50% by weight of solid state film forming alkylsilsesquioxane polymer powder.

13. The composition of claim 12 wherein said composition is compressed into a tablet.

14. The composition of claim 12 wherein said composition is compressed into a metal cup.

15. A composition containing a metal oxide powder and 10-50% by weight of a solid state film forming substance having amphiphilic molecules that are capable of self-assembly into a thin film on a substrate surface.

16. A method of coating substrate surfaces with a hydrophobic thin film of amphiphilic molecules comprising the steps of positioning a substrate and a solid state film forming substance of amphiphilic molecules within a vacuum chamber, evaporating the film forming substance to form a molecular beam of amphiphilic molecules, and allowing the amphiphilic molecules in the molecular beam to settle on the substrate surface and self-assemble thereon into a hydrophobic thin film.

17. The method of claim 16 including the step of rotating said substrate while said amphiphilic molecules in said molecular beam settle thereon within said vacuum chamber.

18. The method of claim 16 including the step of maintaining the temperature within said vacuum chamber at less than 100°C.

19. The method of claim 16 wherein said step of evaporating is carried out to provide a film formation on the substrate surface at a rate of 0.1-1.0 nanometers of film thickness per second.

20. The method of claim 19 wherein the film formation rate is 0.4-0.6 nanometers of film thickness per second.

21. The method of claim 16 wherein said method is carried out for a time to provide the substrate with a film having a thickness of 3-100 nanometers.

22. The method of claim 21 wherein the method is carried out for a time to provide the substrate with a film having a thickness of 6-15 nanometers.

23. The method of claim 16 including the step of maintaining the vacuum chamber at a vacuum of 1×10^{-4} to 1×10^{-6} torr.

24. The method of claim 16 wherein the step of positioning a solid state film forming substance of amphiphilic molecules within a vacuum chamber is carried out by positioning within the vacuum chamber a composition that includes a mixture of an inert powder and a powdered film forming substance of amphiphilic molecules.

25. The method of claim 24 wherein the step of positioning a composition in the chamber is carried out by positioning the composition in the form of a compressed tablet.

26. The method of claim 24 wherein the step of positioning a composition in the chamber is carried out by positioning the composition compressed within a metal cup.

27. The method of claim 24 wherein the step of positioning a composition is carried out positioning a composition that includes a mixture of a metal oxide powder and a powdered film forming substance of amphiphilic molecules.

28. The method of claim 27 wherein the step of positioning a composition is carried out by positioning a composition that contains 10-50% by weight of the powdered film forming substance of amphiphilic molecules.

29. A method of coating substrate surfaces with a hydrophobic thin film of amphiphilic molecules comprising the steps of positioning within a vacuum chamber a substrate and a solid composition that contains a solid state film forming substance of amphiphilic molecules, heating the composition to evaporate the film forming substance and form a molecular beam of amphiphilic molecules, allowing the amphiphilic molecules in the molecular beam to settle on the substrate surface and self-

assemble thereon into a hydrophobic thin film, and maintaining the temperature within the vacuum chamber below 100°C.

30. The method of claim 29 including the step of maintaining the vacuum chamber at a vacuum of 1×10^{-4} to 1×10^{-6} torr.

31. In a method of producing a solid state film forming alkylsilsesquioxane polymer of amphiphilic molecules by the hydrolysis and polymerization of monomers, the step of heating the alkylsilsesquioxane polymer in a vacuum to remove residual water therefrom and provide a dehydrated product.

32. The method of claim 31 wherein the step of heating in a vacuum is carried out at a temperature of 160-180°C.

33. The method of claim 32 wherein the step of heating in a vacuum is carried out at a vacuum at least as low as 1×10^{-2} torr.

34. The method of claim 33 wherein the step of heating in a vacuum is carried out for at least one hour.

35. The method of claim 31 including the step of crushing the dehydrated alkylsilsesquioxane polymer product to a fine powder.

COMPOSITION WITH FILM FORMING ALKYLSILSESQUIOXANE POLYMER AND METHOD FOR APPLYING HYDROPHOBIC FILMS TO SURFACES

ABSTRACT OF THE DISCLOSURE

A solid composition having a solid state film forming substance mixed with an inert carrier. The composition is heated in a vacuum chamber to evaporate the film forming substance by sublimation to form a molecular beam of amphiphilic molecules which settle on a substrate surface within the chamber and bond thereto while self-assembling into a thin film.

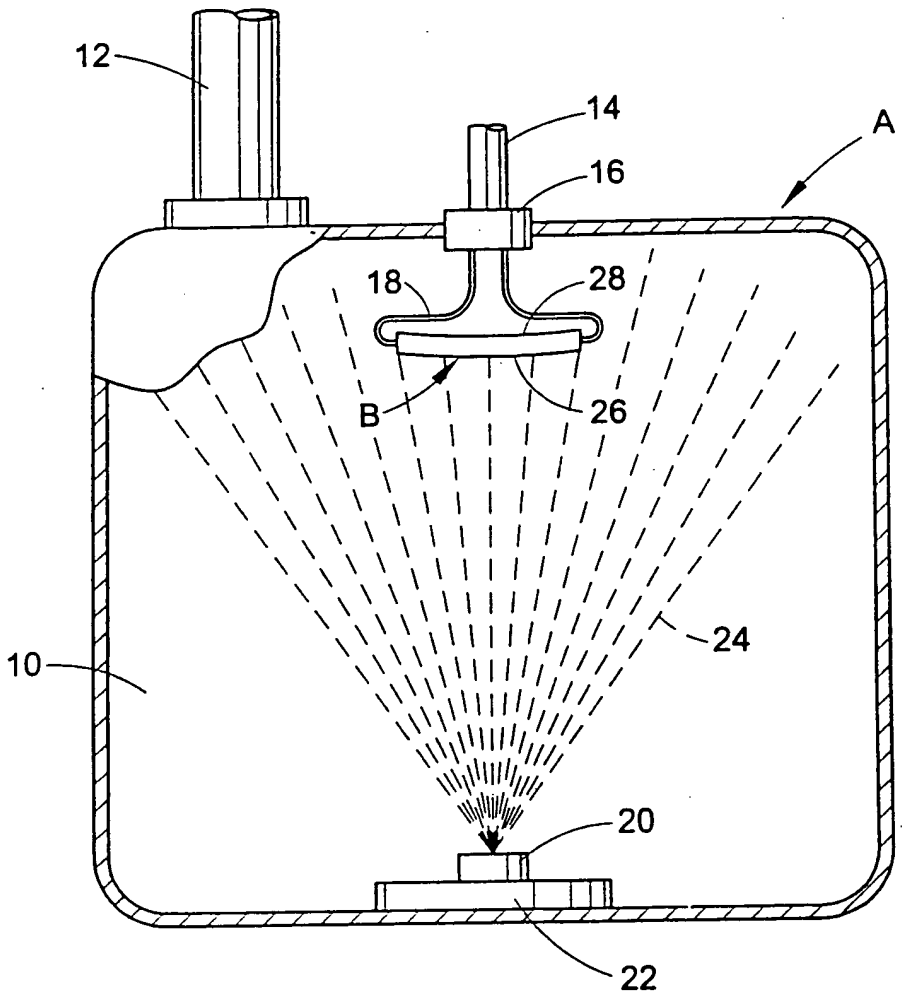
12
14
A
16
18
28
B
26
24
10
20
22

"Pramod Arora"
<parora@core.com>

07/03/01 10:15 AM

To: <hswitzer@jonesday.com>
cc:
Subject: patent application 6/26/01

Dear Mr. Switzer,

It is my pleasure talking to you first time in my life. I am sorry that I could not get chance nor given a chance to communicate with you with patent related matters while employed at Nanofilm.

I am also sorry that I could not get back to you earlier as I was out of town for couple of days. Yesterday, my wife told me that you called and it was late to contact. I did received a patent application to review and was asked to sign. I do not have time to go through and to see what you have wrote.

In my earlier patent Brij has added his name in my work, which leads to patent. It seem that Brij and Scott decides whose name should be included in the patent without a inventor or attorney consent. Nanofilm also promised to pay me $3000 each patent once they get published or awarded. Now they have changed their policy and refused to pay me patent reward. I am seeking legal advice and therefore have no interest to go through this or any future patent to Nanofilm from my work. I do also fully understand that I will keep all subject matters confidential according to my employment agreement with Nanofilm.

If you have any question please reply to this e-mail and I will be very happy to discuss anything you might have.

Thanks,

Pramod Arora

P.S. I will return all documents file (which you sent on 6/26/01) to you tomorrow as it is not appropriate for me keep.

September 19, 2000

To: Dr. Brij Singh
VP, Technology
NANOFILM

From: Dr. Pramod Arora
Director, Thin Film Technology

Sub: Resignation from employment

Dear Dr. Singh,

Over the years working at NANOFILM was very exiting and challenging and I tried to be a loyal employee. It was a great experience working under your supervisions and some time it was very difficult to perform my duties under very tight schedule without getting an award. I have always enjoyed my profession, no matter where I have worked with true devotion and honesty. I can not fool others or myself. I am a person who always respect peoples and helps them when they needed the most. Last year, I was told that company will provide all the resources and instrumentation to perform my duties and finish a project in a scientific and systematic manner. But due to limited resources and not having proper instrumentation in hand my performance was always judged on the basis of accomplishment of a project.

A manager or a company representative should give all the resources and required instrumentation to a project director and let the person do his job in a best possible manner. Project director is required to submit monthly report.

I am submitting my resignation effective immediately. I will be cleaning my office and give all the necessary notebook and papers to you by the end of this week. Therefore, this Friday, September 22, 2000 will be my last day at NANOFILM.

I also understand that I will be rewarded for each patents a sum of $3000 each once they get approved or published. We have submitted two patents (1998 and 1999) and there are two more to be submitted and these are Plasma Cup and Anti-fog hard coating. Pelisse on car windows, PermaSeal for AR lenses and InkBeGone products should also be rewarded as well if company market them in the next 12 months.

Thank you for your help and co-operation during my stay at NANOFILM. If I can be any helpful to you or anyone while not employed by NANOFILM please never hesitate to contact me at any time.

With sincere regards,

Pramod Arora

To: Pramod Arora

From: Brij Singh

Date: September 22, 2000

RE: Resignation Effective on September 22, 2000

Dear Pramod,

First I want to thank you for 10 years of service to Nanofilm. You have made many contributions, and I wish you the very best in your future endeavors.

In your letter of resignation, you mentioned a potential future cash bonus for two potential patents at a future time when the patents are approved. Nanofilm realizes that there is a possible misunderstanding regarding our current incentive plan in R & D, and we wish to resolve that misunderstanding in a manner that works for both you and the company. The plan with which we are currently operating provides a potential salary increase at the time a new product is commercialized, not a cash bonus. This plan is somewhat different than some of our practices in the past, such as in 1998 and 1999. We would like to resolve this misunderstanding in the following way.

In return for your agreements outlined below, we will continue your salary for two additional pay periods and maintain your enrollment in company benefits. This would result in a normal direct deposit in the amount of your regular two week salary on October 6 and again on October 20. The agreements are as follows.

You agree to fully honor your non-disclosure agreement with the Company. You agree not to compete with our Company in our direct lines of product for a period of one year by working for or consulting with our current customers on our specific products. The specific customers covered by this agreement are Satis Vacuum, Barberini, Pentax Optical, Denton Vacuum, and other current customers for our direct lines of products. Please acknowledge your agreement to these terms by signing a copy of this letter below. Should you wish some time to think about this agreement, it can remain open up to September 26, 2000. After that date it will no longer be valid.

In addition, we want to clarify the purchase of your 1,900 Equity Credits by Nanofilm. Per the Equity Credit plan, Nanofilm will buy back your shares at the current price of $3.00 per share. The total current value of these shares is $5,700. You have purchased these shares in 3 purchase transactions for a total cost of $2,238. As a result, the $3,462 difference between your cost and the current value is recognized compensation and will be subject to normal payroll taxes. Nanofilm will be paying you $5,700 minus the tax withholdings required on the recognized compensation portion no later than October 6. You will also be receiving a refund of $206.25 for withholdings that you authorized for this year.

Thanks again for your many years of contribution and good luck in your future.

Sincerely,

Brij Singh
Vice President, Technology

Agreed to by: _____

Date: _____

CARYN M. GROEDEL
Attorney at Law

3681 Green Road
Suite 410
Beachwood, Ohio 44122

Phone: (216) 831-7077
Fax: (216) 831-2135
email: cgroedel@aol.com

July 10, 2001

via facsimile: 216-447-1199

Dr. Scott Rickert
10111 Sweet Valley Drive
Valley View, OH 44125

Dear Dr. Rickert:

I am writing on behalf of Pramod Arora, who has sought my legal advice and counsel in connection with Nanofilm's non-payment of certain performance incentives he was promised during his employment with Nanofilm.

Specifically, Dr. Arora is entitled to $1,000 for each patent obtained on his work as well as $2,000 for each process and product he developed that is sold in the marketplace, for a total of $3,000 for each patent. Thus far, he was paid $3,000 for the gel patent. However, he is still owed the $3,000 bonus for the MgF2 patent obtained in November of 2000, as well as $3,000 for the Ampoule patent obtained in January 2001, and $3,000 for the Container patent obtained in March 2001, for a total of $9,000. Moreover, if the Plasma Cup patent is obtained, which was recently submitted for approval by Nanofilm, Dr. Arora will be entitled to an additional $3,000.

We have your promises in writing, and are willing to litigate this matter if full payment is not made within two weeks from today.

I urge you or your attorney to contact me promptly in an effort to resolve this issue amicably.

Very truly yours,

Caryn M. Groedel

Caryn M. Groedel

CMG:ji

UNITED S'. ES DEPARTMENT OF COMME
Patent and ..ademark Office
ASSISTANT SECRETARY AND COMMISSIONER
OF PATENTS AND TRADEMARKS
Washington, D.C. 20231

APRIL 04, 1997

PTAS

100351144A

BARBARA E. ARNDT, PH.D.
JONES, DAY, REAVIS & POGUE
NORTH POINT - 901 LAKESIDE AVENUE
CLEVELAND, OH 44114-1190

UNITED STATES PATENT AND TRADEMARK OFFICE
NOTICE OF RECORDATION OF ASSIGNMENT DOCUMENT

THE ENCLOSED DOCUMENT HAS BEEN RECORDED BY THE ASSIGNMENT DIVISION OF THE U.S. PATENT AND TRADEMARK OFFICE. A COMPLETE MICROFILM COPY IS AVAILABLE AT THE ASSIGNMENT SEARCH ROOM ON THE REEL AND FRAME NUMBER REFERENCED BELOW.

PLEASE REVIEW ALL INFORMATION CONTAINED ON THIS NOTICE. THE INFORMATION CONTAINED ON THIS RECORDATION NOTICE REFLECTS THE DATA PRESENT IN THE PATENT AND TRADEMARK ASSIGNMENT SYSTEM. IF YOU SHOULD FIND ANY ERRORS OR HAVE QUESTIONS CONCERNING THIS NOTICE, YOU MAY CONTACT THE EMPLOYEE WHOSE NAME APPEARS ON THIS NOTICE AT 703-308-9723. PLEASE SEND REQUEST FOR CORRECTION TO: U.S. PATENT AND TRADEMARK OFFICE, ASSIGNMENT DIVISION, BOX ASSIGNMENTS, NORTH TOWER BUILDING, SUITE 10C35, WASHINGTON, D.C. 20231.

RECORDATION DATE: 11/25/1996

REEL/FRAME: 8330/0684
NUMBER OF PAGES: 3

BRIEF: ASSIGNMENT OF ASSIGNOR'S INTEREST (SEE DOCUMENT FOR DETAILS).

ASSIGNOR:
SINGH, BRIJ P.

DOC DATE: 11/22/1996

ASSIGNOR:
ARORA, PRAMOD K.

DOC DATE: 11/22/1996

ASSIGNEE:
NANOFILM CORPORATION
10111 SWEET VALLEY DRIVE
VALLEY VIEW, OHIO 44125-4250

SERIAL NUMBER: 08755964
PATENT NUMBER:

FILING DATE: 11/25/1996
ISSUE DATE:

KIMBERLY BARNES, EXAMINER
ASSIGNMENT DIVISION
OFFICE OF PUBLIC RECORDS

(Rev. 6-93)
OMB No. 0651-0011 (exp. 4/94)
495263010018
Tab settings

02-07-1997

U.S. DEPARTMENT OF COMMERCE
Patent and Trademark Office
08/755964

To the Honorable Commissioner of Pate... 100351144 ...ched original documents or copy thereof.

NOV 26 1996 TRADEMARK OFF.

1. Name of conveying party(ies):

Brij P. Singh and
Pramod K. Arora

Additional name(s) of conveying party(ies) attached? ☐ Yes ☒ No

2. Name and address of receiving party(ies)

Name: NanoFilm Corporation

Internal Address: 10111 Sweet Valley Drive
Valley View, Ohio 44125-4250

Street Address: (same as above)

City: _____ State: _____ ZIP: _____

Additional name(s) & address(es) attached? ☐ Yes ☒ No

3. Nature of conveyance: MRD 11-25-96

☒ Assignment ☐ Merger

☐ Security Agreement ☐ Change of Name

☐ Other _____

Execution Date: November 22, 1996

4. Application number(s) or patent number(s):

If this document is being filed together with a new application, the execution date of the application is: November 21, 1996

A. Patent Application No.(s)

B. Patent No.(s)

70189 U.S. PTO
02/05/97

Additional numbers attached? ☐ Yes ☒ No

5. Name and address of party to whom correspondence concerning document should be mailed:

Name: Barbara E. Arndt, Ph.D.

Internal Address: Jones, Day, Reavis & Pogue
North Point - 901 Lakeside Avenue
Cleveland, Ohio 44114-1190

Street Address: (same as above)

City: _____ State: _____ ZIP: _____

6. Total number of applications and patents involved: 1

7. Total fee (37 CFR 3.41).....$ 40.00

☒ Enclosed

☒ Authorized to be charged to deposit account for any deficit.

8. Deposit account number:

10-1202

(Attach duplicate copy of this page if paying by deposit account)

DO NOT USE THIS SPACE

40-E

9. Statement and signature.
To the best of my knowledge and belief, the foregoing information is true and correct and any attached copy is a true copy of the original document.

Barbara E. Arndt
Name of Person Signing

Barbara E. Arndt
Signature

November 25, 1996
Date

Total number of pages including cover sheet, attachments, and document: 3

Mail documents to be recorded with required cover sheet information to:
Commissioner of Patents & Trademarks, Box Assignments
Washington, D.C. 20231

DOCKET NO. 495263010018

JOINT

A S S I G N M E N T

In consideration of One Dollar and other good and valuable consideration, receipt of which is hereby acknowledged, we, **BRIJ P. SINGH** and **PRAMOD K. ARORA**, ("ASSIGNORS"), citizens of the United States and India, respectively, residing in North Royalton, Ohio, respectively, hereby sell, transfer, set over and assign unto **NanoFilm Corporation** ("ASSIGNEE"), a corporation of the State of Ohio, having a principal place of business at 10111 Sweet Valley Drive, Valley View, Ohio 44125-4250, its successors, assigns, nominees, or other legal representatives, the entire right, title and interest in and to the invention **METHOD FOR MODIFYING SURFACES WITH ULTRA THIN FILMS** invented by us and the application for United States patent therefor, executed concurrently herewith, and all original and reissued patents granted therefor, and all divisions and continuations thereof, including the subject matter of any and all claims which may be obtained in every such patent, and the right to apply for and obtain patents in countries foreign to the United States, and in and to any Letters Patent which may be granted thereon in such foreign countries, and authorize and request the Commissioner of Patents and Trademarks of the United States, and any official of any country or countries foreign to the United States whose duty it is to issue patents on applications as aforesaid, to issue the said Letters Patent to the said ASSIGNEE, its successors, assigns, nominees or other legal representatives, as assignee and owner of the entire interest, and covenant that we have full right to convey the entire interest herein assigned and that we have not executed and will not execute any agreement in conflict herewith, and agree that we will communicate to said ASSIGNEE, its successors, assigns, nominees or other legal representatives, all facts known to us respecting said invention, whenever requested, and testify in any legal proceedings, sign all lawful papers, execute and deliver all divisional, continuing and reissue applications, make lawful papers, execute and deliver all divisional, continuing and reissue applications, make all rightful oaths and do all lawful acts requisite for the application for such divisional, continuing or reissue applications, or the procuring thereof, and that if and when said ASSIGNEE, its successors, assigns, nominees or other legal representatives desire to file a disclaimer relating thereto we will, upon request, sign and deliver all lawful papers requisite for the filing of such disclaimer, and we further covenant and agree that we will, at any time upon request, do everything legally possible to aid said ASSIGNEE, its successors, assigns, nominees or other legal representatives, either in its or our own

DOCKET NO. 495263010018

names, to apply for, obtain and enforce proper patent protection in all countries, including priority rights granted to patents in foreign countries according to all the laws and treaties in force, all without further consideration but at the expense of said ASSIGNEE, its successors, assigns, nominees or other legal representatives.

BRIJ P. SINGH

PRAMOD K. ARORA

STATE OF OHIO)
) SS.
COUNTY OF CUYAHOGA)

This 22 day of Nov, 1996 before me personally came the above-named BRIJ P. SINGH and PRAMOD K. ARORA, to me personally known as the individuals who executed the foregoing Assignment, and who acknowledged to me that they executed the same of their own free will for the purpose therein set forth.

Notary Public

JANET REED - JAMES, Notary Public
State of Ohio, Cuyahoga County
My Commission Expires Nov. 5, 2000

(SEAL)

UNITED ST 'S DEPARTMENT OF COMMERCE
Patent ar. .demark Office
ASSISTANT SECRETARY AND COMMISSIONER
OF PATENTS AND TRADEMARKS
Washington, D.C. 20231

OCTOBER 01, 1998

PTAS

100771999A

JONES, DAY, REAVIS & POGUE
JACQUELINE M. O'BRIEN
NORTH POINT
901 LAKESIDE AVENUE
CLEVELAND, OH 44114

UNITED STATES PATENT AND TRADEMARK OFFICE
NOTICE OF RECORDATION OF ASSIGNMENT DOCUMENT

THE ENCLOSED DOCUMENT HAS BEEN RECORDED BY THE ASSIGNMENT DIVISION OF THE U.S. PATENT AND TRADEMARK OFFICE. A COMPLETE MICROFILM COPY IS AVAILABLE AT THE ASSIGNMENT SEARCH ROOM ON THE REEL AND FRAME NUMBER REFERENCED BELOW.

PLEASE REVIEW ALL INFORMATION CONTAINED ON THIS NOTICE. THE INFORMATION CONTAINED ON THIS RECORDATION NOTICE REFLECTS THE DATA PRESENT IN THE PATENT AND TRADEMARK ASSIGNMENT SYSTEM. IF YOU SHOULD FIND ANY ERRORS OR HAVE QUESTIONS CONCERNING THIS NOTICE, YOU MAY CONTACT THE EMPLOYEE WHOSE NAME APPEARS ON THIS NOTICE AT 703-308-9723. PLEASE SEND REQUEST FOR CORRECTION TO: U.S. PATENT AND TRADEMARK OFFICE, ASSIGNMENT DIVISION, BOX ASSIGNMENTS, CG-4, 1213 JEFFERSON DAVIS HWY, SUITE 320, WASHINGTON, D.C. 20231.

RECORDATION DATE: 07/20/1998

REEL/FRAME: 9322/0889
NUMBER OF PAGES: 3

BRIEF: ASSIGNMENT OF ASSIGNOR'S INTEREST (SEE DOCUMENT FOR DETAILS).

ASSIGNOR:
SINGH, BRIJ P.

DOC DATE: 07/07/1998

ASSIGNOR:
ARORA, PRAMOD K.

DOC DATE: 07/07/1998

ASSIGNEE:
NANOFILM, LTD.
10111 SWEET VALLEY DRIVE
VALLEY VIEW, OHIO 44125

SERIAL NUMBER: 09084944
PATENT NUMBER:

FILING DATE: 05/26/1998
ISSUE DATE:

JEEVON JONES, EXAMINER
ASSIGNMENT DIVISION
OFFICE OF PUBLIC RECORDS

FORM PTO-1595
(Rev. 6-93)
OMB No. 0651-0011 (exp. 4/94)

Patent and Trademark Office

JUL 20 1998

100771999

Tab settings ▭ ▭ ▭ ▼

To the Honorable Commissioner of Patents and Trademarks: Please record the attached original documents or copy thereof.

1. Name of conveying party(ies):

Brij P. Singh
Pramod K. Arora

Additional name(s) of conveying party(ies) attached? ☐ Yes XX No

2. Name and address of receiving party(ies)

Name: nanoFILM, Ltd.

Internal Address:

Street Address: 10111 Sweet Valley Drive

City: Valley View State: OH ZIP: 44125

Additional name(s) & address(es) attached? ☐ Yes XX No

3. Nature of conveyance:

XX Assignment ☐ Merger

☐ Security Agreement ☐ Change of Name

☐ Other

Execution Date: July 7, 1998

4. Application number(s) or patent number(s):

If this document is being filed together with a new application, the execution date of the application is:

A. Patent Application No.(s)

09/084,944 filed May 26, 1998

B. Patent No.(s)

Additional numbers attached? ☐ Yes X No

5. Name and address of party to whom correspondence concerning document should be mailed:

Name: Jacqueline M. O'Brien

Internal Address: JONES, DAY, REAVIS & POGUE
North Point

Street Address: 901 Lakeside Avenue

City: Cleveland State: OH ZIP: 44114

6. Total number of applications and patents involved: 1

7. Total fee (37 CFR 3.41).....$ 40.00

XX Enclosed

XX Authorized to be charged to deposit account if over or underpayment

8. Deposit account number:

10-1202

(Attach duplicate copy of this page if paying by deposit account)

07/23/1998 DHOUTEN 00000238 09084944
01 FC:581 40.00 OP

DO NOT USE THIS SPACE

9. Statement and signature.

To the best of my knowledge and belief, the foregoing information is true and correct and any attached copy is a true copy of the original document.

Jacqueline M. O'Brien
Name of Person Signing

Jacqueline M O'Brien
Signature

July 15, 1998
Date

Total number of pages including cover sheet, attachments, and document: 3

Mail documents to be recorded with required cover sheet information to:
Commissioner of Patents & Trademarks, Box Assignments
Washington, D.C. 20231

DOCKET NO. 495263010019

JOINT

A S S I G N M E N T

In consideration of One Dollar and other good and valuable consideration, receipt of which is hereby acknowledged, we, **BRIJ P. SINGH** and **PRAMOD K. ARORA**, ("ASSIGNORS"), citizens of the United States and India, respectively, residing in North Royalton, Ohio, respectively, hereby sell, transfer, set over and assign unto **nanoFILM, Ltd.** ("ASSIGNEE"), an Ohio Limited Liability Company, having a principal place of business at 10111 Sweet Valley Drive, Valley View, Ohio 44125-4250, its successors, assigns, nominees, or other legal representatives, the entire right, title and interest in and to the invention **METHOD FOR MODIFYING SURFACES WITH ULTRA THIN FILMS** invented by us and United States Patent Application Serial No. 09/084,944, filed May 26, 1998 therefor, and all original and reissued patents granted therefor, and all divisions and continuations thereof, including the subject matter of any and all claims which may be obtained in every such patent, and the right to apply for and obtain patents in countries foreign to the United States, and in and to any Letters Patent which may be granted thereon in such foreign countries, and authorize and request the Commissioner of Patents and Trademarks of the United States, and any official of any country or countries foreign to the United States whose duty it is to issue patents on applications as aforesaid, to issue the said Letters Patent to the said ASSIGNEE, its successors, assigns, nominees or other legal representatives, as assignee and owner of the entire interest, and covenant that we have full right to convey the entire interest herein assigned and that we have not executed and will not execute any agreement in conflict herewith, and agree that we will communicate to said ASSIGNEE, its successors, assigns, nominees or other legal representatives, all facts known to us respecting said invention, whenever requested, and testify in any legal proceedings, sign all lawful papers, execute and deliver all divisional, continuing and reissue applications, make lawful papers, execute and deliver all divisional, continuing and reissue applications, make all rightful oaths and do all lawful acts requisite for the application for such divisional, continuing or reissue applications, or the procuring thereof, and that if and when said ASSIGNEE, its successors, assigns, nominees or other legal representatives desire to file a disclaimer relating thereto we will, upon request, sign and deliver all lawful papers requisite for the filing of such disclaimer, and we further covenant and agree that we will, at any time upon request, do everything legally possible to aid said ASSIGNEE, its successors, assigns, nominees or other legal representatives, either in its or our own

DOCKET NO. 495263010019

names, to apply for, obtain and enforce proper patent protection in all countries, including priority rights granted to patents in foreign countries according to all the laws and treaties in force, all without further consideration but at the expense of said ASSIGNEE, its successors, assigns, nominees or other legal representatives.

BRIJ P. SINGH

PRAMOD K. ARORA

STATE OF OHIO)
) SS.
COUNTY OF CUYAHOGA)

This 7TH day of July, 1998 before me personally came the above-named BRIJ P. SINGH and PRAMOD K. ARORA, to me personally known as the individuals who executed the foregoing Assignment, and who acknowledged to me that they executed the same of their own free will for the purpose therein set forth.

Eric J. Burmeister
Notary Public

ERIC BURMEISTER, Notary Public
State of Ohio, Cuyahoga County
My Commission Expires Oct. 7, 2002

(SEAL)

UNITED ST. .S DEPARTMENT OF COMMERCE
Patent and Trademark Office
ASSISTANT SECRETARY AND COMMISSIONER
OF PATENTS AND TRADEMARKS
Washington, D.C. 20231

FEBRUARY 02, 1999

PTAS

100850569A

JONES, DAY, REAVIS & POGUE
H. DUANE SWITZER
NORTH POINT
901 LAKESIDE AVENUE
CLEVELAND, OHIO 44114

UNITED STATES PATENT AND TRADEMARK OFFICE
NOTICE OF RECORDATION OF ASSIGNMENT DOCUMENT

THE ENCLOSED DOCUMENT HAS BEEN RECORDED BY THE ASSIGNMENT DIVISION OF THE U.S. PATENT AND TRADEMARK OFFICE. A COMPLETE MICROFILM COPY IS AVAILABLE AT THE ASSIGNMENT SEARCH ROOM ON THE REEL AND FRAME NUMBER REFERENCED BELOW.

PLEASE REVIEW ALL INFORMATION CONTAINED ON THIS NOTICE. THE INFORMATION CONTAINED ON THIS RECORDATION NOTICE REFLECTS THE DATA PRESENT IN THE PATENT AND TRADEMARK ASSIGNMENT SYSTEM. IF YOU SHOULD FIND ANY ERRORS OR HAVE QUESTIONS CONCERNING THIS NOTICE, YOU MAY CONTACT THE EMPLOYEE WHOSE NAME APPEARS ON THIS NOTICE AT 703-308-9723. PLEASE SEND REQUEST FOR CORRECTION TO: U.S. PATENT AND TRADEMARK OFFICE, ASSIGNMENT DIVISION, BOX ASSIGNMENTS, CG-4, 1213 JEFFERSON DAVIS HWY, SUITE 320, WASHINGTON, D.C. 20231.

RECORDATION DATE: 10/01/1998

REEL/FRAME: 9498/0980
NUMBER OF PAGES: 3

BRIEF: ASSIGNMENT OF ASSIGNOR'S INTEREST (SEE DOCUMENT FOR DETAILS).

ASSIGNOR:
SINGH, BRIJ P.

DOC DATE: 10/01/1998

ASSIGNOR:
ARORA, PRAMOD K.

DOC DATE: 10/01/1998

ASSIGNEE:
NANOFILM, LTD.
10111 SWEET VALLEY DRIVE
VALLEY VIEW, OHIO 44125

SERIAL NUMBER: 09164489
PATENT NUMBER:

FILING DATE: 10/01/1998
ISSUE DATE:

KIMBERLY WHITE, EXAMINER
ASSIGNMENT DIVISION
OFFICE OF PUBLIC RECORDS

FORM PTO-1595
(Rev. 6-93)
OMB No. 0651-0011 (exp. 4/94)
495263010020
Tab settings ▼

10-14-1998
100850569

VER SHEET
LY

U.S. DEPARTMENT OF COMMERCE
Patent and Trademark Office

To the Honorable Commissioner of Patents and Trademarks: ...ord the attached original documents or copy thereof.

1. Name of conveying party(ies):

Brij P. Singh and
Pramod K. Arora

Additional name(s) of conveying party(ies) attached? ☐ Yes ☐ No

2. Name and address of receiving party(ies)

Name: nanoFILM, Ltd.

Internal Address:

Street Address: 10111 Sweet Valley Drive

City: Valley View State: Ohio ZIP: 44125

Additional name(s) & address(es) attached? ☐ Yes ☒ No

jc518 U.S. PTO 09/164489 10/01/98

3. Nature of conveyance:

☒ Assignment ☐ Merger

☐ Security Agreement ☐ Change of Name

☐ Other

Execution Date: October 1, 1998

4. Application number(s) or patent number(s):

If this document is being filed together with a new application, the execution date of the application is: Sept. 30, 1998

A. Patent Application No.(s)

B. Patent No.(s)

Additional numbers attached? ☐ Yes ☒ No

5. Name and address of party to whom correspondence concerning document should be mailed:

Name: H. Duane Switzer

Internal Address: Jones, Day, Reavis & Pogue

Street Address: North Point
901 Lakeside Avenue

City: Cleveland State: Ohio ZIP: 44114

6. Total number of applications and patents involved: 1

7. Total fee (37 CFR 3.41).....$ 40.00

☒ Enclosed

☒ Authorized to be charged to deposit account for any deficit.

8. Deposit account number:

10-1202

(Attach duplicate copy of this page if paying by deposit account)

10/13/1998 TTOWII 00000314 09164489
01 FC:581 40.00 OP

DO NOT USE THIS SPACE

9. Statement and signature.
To the best of my knowledge and belief, the foregoing information is true and correct and any attached copy is a true copy of the original document.

H. Duane Switzer
Name of Person Signing

H. Duane Switzer
Signature

October 1, 1998
Date

Total number of pages including cover sheet, attachments, and document: 3

Mail documents to be recorded with required cover sheet information to:
Commissioner of Patents & Trademarks, Box Assignments
Washington, D.C. 20231

DOCKET NO. 495263010020

JOINT

ASSIGNMENT

In consideration of One Dollar and other good and valuable consideration, receipt of which is hereby acknowledged, we, **BRIJ P. SINGH** and **PRAMOD K. ARORA**, ("ASSIGNORS"), citizens of the United States and India, respectively, residing in North Royalton, Ohio, respectively, hereby sell, transfer, set over and assign unto **nanoFILM, Ltd.** ("ASSIGNEE"), an Ohio Limited Liability Company of the State of Ohio, having a principal place of business at 10111 Sweet Valley Drive, Valley View, Ohio 44125-4250, its successors, assigns, nominees, or other legal representatives, the entire right, title and interest in and to the invention **HYDROPHOBIC THIN FILMS ON MAGNESIUM FLUORIDE SURFACES** invented by us and the application for United States patent therefor, executed concurrently herewith, and all original and reissued patents granted therefor, and all divisions and continuations thereof, including the subject matter of any and all claims which may be obtained in every such patent, and the right to apply for and obtain patents in countries foreign to the United States, and in and to any Letters Patent which may be granted thereon in such foreign countries, and authorize and request the Commissioner of Patents and Trademarks of the United States, and any official of any country or countries foreign to the United States whose duty it is to issue patents on applications as aforesaid, to issue the said Letters Patent to the said ASSIGNEE, its successors, assigns, nominees or other legal representatives, as assignee and owner of the entire interest, and covenant that we have full right to convey the entire interest herein assigned and that we have not executed and will not execute any agreement in conflict herewith, and agree that we will communicate to said ASSIGNEE, its successors, assigns, nominees or other legal representatives, all facts known to us respecting said invention, whenever requested, and testify in any legal proceedings, sign all lawful papers, execute and deliver all divisional, continuing and reissue applications, make lawful papers, execute and deliver all divisional, continuing and reissue applications, make all rightful oaths and do all lawful acts requisite for the application for such divisional, continuing or reissue applications, or the procuring thereof, and that if and when said ASSIGNEE, its successors, assigns, nominees or other legal representatives desire to file a disclaimer relating thereto we will, upon request, sign and deliver all lawful papers requisite for the filing of such disclaimer, and we further covenant and agree that we will, at any time upon request, do everything legally possible to aid said ASSIGNEE, its successors, assigns, nominees or other legal representatives, either in its or our own names, to apply for, obtain and enforce proper patent protection in all countries, including priority rights granted to patents in foreign countries according to all the laws and treaties in force, all without further consideration but at

DOCKET NO. 495263010020

the expense of said ASSIGNEE, its successors, assigns, nominees or other legal representatives.

BRIJ P. SINGH

PRAMOD K. ARORA

STATE OF OHIO)
) SS.
COUNTY OF CUYAHOGA)

This 1ST day of October, 1998 before me personally came the above-named BRIJ P. SINGH and PRAMOD K. ARORA, to me personally known as the individuals who executed the foregoing Assignment, and who acknowledged to me that they executed the same of their own free will for the purpose therein set forth.

Notary Public

(SEAL)

BRIAN L. PERDUE, Notary Public
State of Ohio, Cuyahoga County
My Commission Expires Feb. 13, 2002

FORM PTO-1595 (Rev. 6-93) 6-30-98
OMB No. 0651-0011 (exp. 4/94)

RE(07-15-1998 SHEET 6-30-98

U.S. DEPARTMENT OF COMMERCE
Patent and Trademark Office

Tab settings ⇨ ⇨ ⇨ ▼

100764414

To the Honorable Commissioner of Pa... ...ached original documents or copy thereof.

1. Name of conveying party(ies):

NanoFilm Corporation

Additional name(s) of conveying party(ies) attached? ☐ Yes ☒ No

2. Name and address of receiving party(ies)

Name: nanoFILM, Ltd.

Internal Address:

Street Address: 10111 Sweet Valley Drive

City: Valley View State: Ohio ZIP: 44125

Additional name(s) & address(es) attached? ☐ Yes ☒ No

3. Nature of conveyance:

☐ Assignment ☒ Merger

☐ Security Agreement ☐ Change of Name

☐ Other

Execution Date: June 30, 1995

4. Application number(s) or patent number(s):

If this document is being filed together with a new application, the execution date of the application is:

A. Patent Application No.(s)

See Attachment A

B. Patent No.(s)

See Attachment A

Additional numbers attached? ☒ Yes ☐ No

5. Name and address of party to whom correspondence concerning document should be mailed:

Name: Jacqueline M. O'Brien

Internal Address: JONES DAY REAVIS & POGUE
North Point

Street Address: 901 Lakeside Avenue

City: Cleveland State: Ohio ZIP: 44114

6. Total number of applications and patents involved: 11

7. Total fee (37 CFR 3.41).....$ 440.00 E

☒ Enclosed

☒ Authorized to be charged to deposit account, if over or underpayment

8. Deposit account number:

10-1202

(Attach duplicate copy of this page if paying by deposit account)

07/14/1998 JBNGBAZZ 00000106 5078791

DO NOT USE THIS SPACE

01 FC:581 440.00 OP

9. Statement and signature.

To the best of my knowledge and belief, the foregoing information is true and correct and any attached copy is a true copy of the original document.

Jacqueline M. O'Brien — Name of Person Signing

Jacqueline M O'Brien — Signature

6/30/98 — Date

Total number of pages including cover sheet, attachments, and document: 9

Mail documents to be recorded with required cover sheet information to:
Commissioner of Patents & Trademarks, Box Assignments
Washington, D.C. 20231

ATTACHMENT A

U.S. Patent No.	Title	Issue Date
5,078,791	Film Forming Composition and Method for Modifying Surfaces with Ultra-Thin Films	01/07/92
5,106,561	Ultra-Thin Molecular Film	04/21/92
5,166,000	Solution Containing Amphiphilic Molecules	11/24/92
5,173,365	Ultra-Thin Molecular Film	12/22/92
5,204,126	Thin Films	04/20/93
5,219,654	Film Forming Composition and Method for Modifying Surfaces with Ultra-Thin Films	06/15/93
5,300,561	Solution Containing Amphiphilic Molecules	04/05/94
5,766,698	Method for Modifying Surfaces with Ultra Thin Films	06/16/98

U.S. Patent Application No.	Title	Filing Date
08/321,088	Ultra-Thin Molecular Film	03/09/89
08/992,146	Method for Modifying Surfaces with Ultra Thin Films	12/17/97
09/084,944	Method for Modifying Surfaces with Ultra Thin Films	05/26/98

Canadian Patent Application No.	Title	Filing Date
2,120,252	Solution Containing Amphiphilic Molecules	03/29/94
2,217,576	Method for Modifying Surfaces with Ultra Thin Films	10/07/97

European Patent Application No.		
92906253.7	Thin Films	11/20/91
92918168.3	Solution Containing Amphiphilic Molecules	08/12/92
97202777.5	Thin Films	09/10/97
97309401.4	Method for Modifying Surfaces with Ultra Thin Films	11/21/97

Japanese Patent Application No.		
297244/89	Ultra-Thin Molecular Film	11/15/89

Patent Cooperation Treaty Application No.		
PCT/US91/08748	Thin Films	11/20/91

Prescribed by
Bob Taft, Secretary of State
30 East Broad Street, 14th Floor
Columbus, Ohio 43266-0418
Form MER (July 1994)

Approved_____
Date_____
Fee_____

CERTIFICATE OF MERGER

In accordance with the requirements of Ohio law, the undersigned corporations, limited liability companies and/or limited partnerships, desiring to effect a merger, set forth the following facts:

I. SURVIVING ENTITY

A. The name of the entity surviving the merger is:

nanoFILM, Ltd.

(if the surviving entity is an Ohio limited partnership or qualified foreign limited partnership, its registration number must be provided)

B. Name change: As a result of this merger, the name of the surviving entity has been changed to the following: _____

_____ (complete only if the name of surviving entity is changing through the merger)

C. The surviving entity is a: *(Please check the appropriate box and fill in the appropriate blanks)*

[ ] Domestic (Ohio) corporation

[ ] Foreign (Non-Ohio) corporation incorporated under the laws of the state/ country of _____ and licensed to transact business in the state of Ohio.

[ ] Foreign (Non-Ohio) corporation incorporated under the laws of the state/country of _____, and NOT licensed to transact business in the state of Ohio.

XXXXXX Domestic (Ohio) limited liability company

[ ] Foreign (Non-Ohio) limited liability company organized under the laws of the state/country of _____, and registered to do business in the state of Ohio.

[ ] Foreign (Non-Ohio) limited liability company organized under the laws of the state/country of _____, and NOT registered to do business in the state of Ohio.

[ ] Domestic (Ohio) limited partnership, registration number _____

[ ] Foreign (Non-Ohio) limited partnership organized under the laws of the state/country of _____, and registered to do business in the state of Ohio, under registration number _____

[ ] Foreign (Non-Ohio) limited partnership organized under the laws of the state/country of _____, and NOT registered to do business in the state of Ohio.

II. Merging Entities

The name, type of entity, and state/country of incorporation or organization, respectively, of each entity, other than the survivor, which is a party to the merger are as follows: *(If insufficient space to enter this data, please attach a separate sheet listing the merging entities. Ohio registered or foreign qualified limited partnerships must include registration number)*

Name	State/ Country of Organization	Type of Entity
NanoFilm Corporation	Ohio	corporation

III. Merger Agreement on File

The name and mailing address of the person or entity from whom/which eligible persons may obtain a copy of the agreement of merger upon written request:

Name	Address
Scott E. Rickert	10111 Sweet Valley Drive (street and number) Valley View, OH 44125-4250 (city, village or township) (state) (zip code)

IV. Effective Date of Merger

This merger is to be effective:

On June 30, 1995 *(if a date is specified, the date must be a date on or after the date of filing; the effective date of the merger cannot be earlier than the date of filing; if no date is specified, the date of filing will be the effective date of the merger).*

V. Merger Authorized

The laws of the state or country under which each constituent entity exists, permits this merger.

This merger was adopted, approved and authorized by each of the constituent entities in compliance with the laws of the state under which it is organized, and the persons signing this certificate on behalf of each of the constituent entities are duly authorized to do so .

VI. Statutory Agent

The name and address of the surviving entity's statutory agent upon whom any process, notice or demand may be served is:

Name	Address
A.G.C. Co.	1900 East Ninth Street, Suite 3200 (complete street address) Cleveland, OH 44114 (city, village or township) (zip code)

(This item MUST be completed if the surviving entity is a foreign entity which is not licensed, registered or otherwise authorized to conduct or transact business in the State of Ohio)

Acceptance of Agent

The undersigned, named herein as the statutory agent for the above referenced surviving entity, hereby acknowledges and accepts the appointment of statutory agent for said entity.

_____

Signature of Agent

(The acceptance of agent must be completed by domestic surviving entities if through this merger the statutory agent for the surviving entity has changed, or the named agent differs in any way from the name reflected on the Secretary of State's records.)

VII. Statement of Merger

Upon filing, or upon such later date as specified herein, the merging entity/entities listed herein shall merge into the listed surviving entity.

VIII. Amendments

The articles of incorporation, articles of organization or certificate of limited partnership (strike the inapplicable terms) of the surviving domestic entity herein, are amended as set forth in the attached "Exhibit A"

(Please note that any amendments to articles of incorporation, articles of organization or to a certificate of limited partnership MUST be attached if the surviving entity is a DOMESTIC corporation, limited liability company, or limited partnership.)

The undersigned constituent entities have caused this certificate of merger to be signed by its duly authorized officers, partners and representatives on the date(s) stated below.

nanoFILM, Ltd.
exact name of entity

By: Scott E. Rickert
Its: Scott E. Rickert, President

Date:

NanoFilm Corporation
exact name of entity

By: Scott E. Rickert
Its: Scott E. Rickert, President

Date:

exact name of entity

By:
Its:

Date:

exact name of entity

By:
Its:

Date:

exact name of entity

By:
Its:

Date:

exact name of entity

By:
Its:

Date:

exact name of entity

By:
Its:

Date:

exact name of entity

By:
Its:

Date:

exact name of entity

By:
Its:

Date:

exact name of entity

By:
Its:

Date:

(Please note that the chairman of the board, the president, vice president, secretary or an assistant secretary must sign on behalf of each constituent corporation, and at least a general partner must sign on behalf of each constituent limited partnership. If insufficient space for signature, a separate sheet should be attached containing such signatures)

CERTIFICATION

I hereby certify that the attached Certificate of Merger of NanoFilm Corporation into nanoFILM, Ltd., an Ohio Limited Liability Company, is a true and exact copy of the original.

STATE OF OHIO)
) ss.
COUNTY OF CUYAHOGA)

Jacqueline M O'Brien

Jacqueline M. O'Brien - Notary Public

Date: June 30, 1998

My Commission Expires:

JACQUELINE M. O'BRIEN
Notary Public, State of Ohio, Cuy. Cty.
My Commission Expires Aug. 2, 1999

UNITED STATES PATENT AND TRADEMARK OFFICE

COMMISSIONER FOR PATENTS
UNITED STATES PATENT AND TRADEMARK OFFICE
WASHINGTON, D.C. 20231
www.uspto.gov

Paper No. 5

BIRCH STEWART KOLASCH & BIRCH LLP
PO BOX 747
FALLS CHURCH VIRGINIA 22040-0747

COPY MAILED
SEP 5 2001
OFFICE OF PETITIONS

In re Application of
Minami et al.
Application No. 09/481,391
Filed: January 12, 2000
Attorney Docket No.n/a

AND

CORRECTED DECISION
ON PETITION AND
NOTICE OF MISSING PARTS

In re Application of
Minami et al.
Application No. 09/887,665
Filed: January 12, 2000
Attorney Docket No. 0925-0154P

The decision of July 17, 2001, in application No. 09/481,391 contained a typographical error in the filing date to be accorded the '391 application. Further, the decision did not take into consideration that the examination of the English language papers originally filed in the '391 application had commenced by way of the Office action of November 22, 2000.

Accordingly, the decision of November 22, 2000 is **vacated**.

The petition under 37 CFR 1.182 filed April 9, 2001, in the '391 application and resubmitted April 23, 2001 to disregard the originally filed English language papers in the '391 application is being treated as a petition to accord a filing date of January 12, 2000 to Japanese priority document 11-079518 present in the USPTO on that date as a separate application filed under 35 USC 111(a) and 37 CFR 1.53(b) in a language other than English, which claims benefit of Japanese 11-079518 filed March 24, 1999.

So construed, the petition is granted.

The originally filed declaration does not execute the current specification, and only

executes the incorrect English language papers filed on January 12, 2000. The substitute declaration filed with the petition executes application No 09./481,391. Accordingly, since no declaration yet filed executes the application papers present on filing in the '665 application, this application is considered to have been filed without an oath or declaration. Applicant is given TWO MONTHS from this mailing to file an oath or declaration specifically identifying application No. 09/887,665, filed January 11, 2000, and also submit the fee for late completion of an application, both Addressed to Box Missing Parts. Extensions of time are available under 37 CFR 1.136(a).[1]

In essence, petitioner's seek relief from their inadvertent error in submitting an English language specification, drawings, and claims in the '391 application on January 12., 2000 that did not correspond to the Japanese priority document that was also present in the '391 application on that date, so that they can retain the filing date of January 12, 2000 for an original English language application that corresponds to the Japanese priority document. Inspection of the certified translation of the Japanese priority document that was submitted with the petition reveals that the Japanese language priority document, present in the USPTO on January 12, 2000 included a specification, all drawings referenced in that specification, and at least one (3) claim(s). As such, applicants are entitled to a filing date of January 12, 2001 based on the non-English specification represented by that priority document This decision grants the requested relief, subject to certain conditions noted *infra*.

Pursuant to 37 CFR 1.182, this favorable decision may be, and is, conditioned on the requirement that the Japanese priority document be transferred to a new file wrapper which has been assigned application No. 09/887,665, and accorded a filing date of January 12, 2000. This is particularly so in this case as the English language papers that were present on filing (albeit incorrectly submitted) were processed by the USPTO and properly accorded a filing date and *ex parte* examination has already ensued on the claimed invention presented by those papers. Further, as pointed out at 65 *Fed. Reg.* 50098 (Aug. 16, 2000) the basic filing fee did not cover the Office's costs of processing and examination of the '391 application, which were incurred by applicant's filing error. It also should be noted that *inter alia*, 37 CFR 1.145 renders it problematic as to whether the examination in the '391 application could properly continue on the merits of the newly presented claims to the correct invention, after issuance of an Office action on the merits of the originally claimed (in English) invention.

The originally filed English language papers have been retained in the '391 file.

---

[1] Petitioner may also wish to submit an assignment, under separate cover to Assignment Branch, that specifically identifies application No. 09/887,665 filed January 11, 2000.

The priority document, and all the subsequently filed English language papers have been transferred to the '665 application file, and the filing fees charged as authorized in the petition.

Application No. 09/481,391 is being returned to Technology Center AU 2614, for further processing as an abandoned application.

Application No. 09/887,665 is being forwarded to the Office of Initial Patent Examination for further processing as an application filed on January 12, 2000, under 35 USC 111(a) and 37 CFR 1.53(b) in a language other than English, using the photocopy of the Japanese priority document, previously prepared by the undersigned, with an indication that, on filing, 3 claims and four sheets of drawings were present. The preliminary amendment of May 22, 2001, has been modified by the undersigned to reflect that it is directed to the '665 application and that original claims 1 through 3 (present in the priority document) have been canceled (not 1 through 10) and that new claims 11 through 17 have been renumbered (pursuant to 37 CFR 1.121), as 4 through 10, respectively.

The marked-up copy of the original (albeit incorrect) English language specification will not be further employed in the '665 application. The examiner is authorized to consider, during examination, pages 1 through 24, and 27 of the English language specification and abstract filed May 22, 2001, as a substitute specification corresponding to the verified translation of the Japanese priority document. The 7 claims appearing on pages 25, 26 have been superceded by claims 4 through 10 of the preliminary amendment of May 22, 2001.

Fees totaling $820 (the $690 filing fee due 1/12/00, authorized on the same date in the '391 application and the $130 fee for filing a non-English specification), have been charged to deposit account No. 02-2448 for the '665 application.

Telephone inquiries related to this decision should be directed to the undersigned. Telephone inquiries related to OIPE processing should be directed to their hotline at (703) 308-1202.

Brian Hearn

Brian Hearn
Senior Petitions Examiner
Office of Petitions
Office of the Deputy Commissioner
for Patent Examination Policy

UNITED STATES PATENT AND TRADEMARK OFFICE

COMMISSIONER FOR PATENTS
UNITED STATES PATENT AND TRADEMARK OFFICE
WASHINGTON, D.C. 20231
www.uspto.gov

MILTON OLIVER
WARE, FRESSOLA, VAN DER SLUYS & ADOLPHSON LLP
P.O. BOX 224
MONROE, CT 06468

Paper No. 4

COPY MAILED

OCT 2 2 2001

OFFICE OF PETITIONS

In re Application of	:	
Volkmar Heuer	:	DECISION GRANTING
Application No. 09/887,676	:	PETITION
Filed: January 23, 2001	:	
Attorney Docket No. 902.739-1	:	

This is a decision on the petition filed July 30, 2001, requesting that a Continued Prosecution Application (CPA) deposited January 23, 2001, based on prior application No. 09/150,150 be treated as an application under 37 CFR 1.53(b) and be accorded a filing date of January 23, 2001.

A request for a CPA based on prior application No. 09/150,150 was deposited on January 23, 2001. Fortunately, the CPA papers were not entered into the record of 09/150,150. The issue fee was paid in the prior application on January 22, 2001 and the prior application issued as Patent No. 6,236,660 on May 22, 2001. The present petition requests that the CPA request be treated as an application filed under 37 CFR 1.53(b).

The petition is granted.

Office records will be corrected to show that the $710.00 filing fee and the $130.00 fee for suspension of prosecution paid on January 23, 2001, and the $130.00 petition fee paid on July 30, 2001 have been applied in application No. 09/887,676, not in application No. 09/150,150.

The application is being forwarded to the Office of Initial Patent Examination for processing as an application under 37 CFR 1.53(b), not under 37 CFR 1.53(d), with a filing date of January 23, 2001, using the specification, drawings, and declaration filed on that date.[1]

---

[1] The IDS and a copy of an assignment document, filed January 23, 2001, have also been placed in the file of the above-identified application.

Telephone inquiries specific to this matter should be directed to Petitions Attorney E. Shirene Willis at (703) 308-6712.

Beverly M. Flanagan
Supervisory Petitions Examiner
Office of Petitions
Office of the Deputy Commissioner
for Patent Examination Policy

UNITED STATES PATENT AND TRADEMARK OFFICE

COMMISSIONER FOR PATENTS
UNITED STATES PATENT AND TRADEMARK OFFICE
P.O. BOX 1450
ALEXANDRIA, VA 22313-1450
www.uspto.gov

John S. Pratt, Esq.
Kilpatrick Stockton, LLP
1100 Peachtree Street
Atlanta, GA 30309

COPY MAILED

FEB 16 2005

OFFICE OF PETITIONS

In re Application of	:	
Richard N. Terry, et al.	:	
Application No. 09/887,680	:	ON PETITION
Filed: October 26, 2001	:	
Attorney Docket No. 02706-0421 (42276-265479)	:	

This is a decision on the petition under 37 CFR 1.137(b), filed January 7, 2005, to revive the above-identified application.

The petition is **GRANTED**.

Telephone inquiries concerning this decision should be directed to the undersigned at (571) 272-3223.

The application file is being referred to the Publishing Division to be processed into a patent.

Marianne E. Jenkins
Petitions Examiner
Office of Petitions
Office of the Deputy Commissioner
for Patent Examination Policy

UNITED STATES PATENT AND TRADEMARK OFFICE

COMMISSIONER FOR PATENTS
UNITED STATES PATENT AND TRADEMARK OFFICE
WASHINGTON, D.C. 20231
www.uspto.gov

GOWLING LAFLEUR HENDERSON LLP
160 Elgin Street, Suite 2600
Ottawa, Ontario, Canada, K1P 1C3

COPY MAILED

DEC 07 2001

OFFICE OF PETITIONS

In re Application of
Luca R. Diaconescu et al.
Application No. 09/887685
Filed: September 21, 2000
Attorney Docket No.: 08-886705US

: DECISION GRANTING
: PETITION

This is a decision on the paper styled "History of Missing File" filed September 19, 2001 and the paper filed December 3, 2001 which are being construed collectively as a petition requesting that a patent application of Luca R. Diaconescu and Ronald J. Gagnon (attorney docket No. 08-886705US) be accorded a filing date of September 21, 2000.

Petitioner alleges that the original application papers were filed in the Patent and Trademark Office (Office) on September 21, 2000, and subsequently misplaced in the Office. In support, the petition is accompanied by a copy of petitioner's postcard receipt acknowledging receipt in the Office on September 21, 2000 of 10 pages of specification, 5 claims, an abstract page, 3 sheets of drawings, a declaration, and an assignment page. A copy of the original application papers purportedly filed on September 21, 2000 was also supplied.

The original utility application papers identified on the postcard receipt cannot be located. However, in view of the evidence presented, the petition to accord the application a filing date of September 21, 2000 is granted.

Applicants should notify this office if the original application papers are subsequently discovered in the Office so that the present duplicate file can be merged with the original papers and any duplicate filing fee refunded.

The petition and duplicate papers received September 19, 2001 have been placed in a new file wrapper and assigned application No. 09/887,685. The duplicate papers will be used for examination purposes.

The $690.00 large entity application filing fee will be charged to applicant's deposit account No. 07-1750 after mailing of this decision.

The application is being forwarded to the Office of Initial Patent Examination for further processing with a filing date of September 21, 2000, using the copy of the application papers supplied September 19, 2001.

Any inquiries related to this decision should be directed to Legal Advisor Darnell M. Jayne at (703) 305-3310.

James J. Engel
Legal Advisor
Office of Patent Legal Administration
Office of the Deputy Commissioner
for Patent Examination Policy

dmj

UNITED STATES PATENT AND TRADEMARK OFFICE

Commissioner for Patents
United States Patent and Trademark Office
Washington, D.C. 20231
www.uspto.gov
DIW 01-02

Paper No. 3

DONALD W. MARGOLIS
MARGOLIS AND ASSOCIATES
3405 PENROSE PLACE, SUITE 105
BOULDER, CO 80301

COPY MAILED

FEB 14 2002

OFFICE OF PETITIONS

In re Application of	:	
Jackson et al.	:	
Application No. 09/887,692	:	DECISION GRANTING PETITION
Filed: 18 June, 2001	:	
Attorney Docket No. P4136-DIV	:	

This is a decision on the petition filed on 27 December, 2001, requesting that the Continued Prosecution Application (CPA) filed on 18 June, 2001, and based on prior application No. 09/438,333 (issued as U.S. Patent No. 6,248,796 on 19 June, 2001) be treated as a continuation application under 37 CFR 1.53(b), rather than under 37 CFR 1.53(d), and be accorded a filing date of 18 June, 2001.

The petition **GRANTED**.

A review of the file of prior application No. 09/438,333 reveals that a request for a continued prosecution application (CPA) under 37 CFR 1.53(d) based on prior application No. 09/438,333 was filed in the above-identified patent application on 18 June, 2001. The prior application, however, issued as U.S. Patent No. 6,248,796 on 19 June, 2001, as a result of applicant's payment of the issue fee on 12 April, 2001. Since the prior application has issued as a patent, the original application papers present in the file of Application No. 09/438,333 are no longer available for processing under 37 CFR 1.53(d).

In view of the decision and improper CPA request, the CPA request and other papers filed on 18 June, 2001, have been removed from the file of application No. 09/438,333 and have been assigned application No. 09/887,692 for identification purposes. The present petition has also been placed in the file of Application No. 09/887,692. All further correspondence concerning the

application deposited on 18 June, 2001, should be directed to Application No. 09/887,692, not Application No. 09/438,333.

The present petition requests that the CPA request be treated as an application under 37 CFR 1.53(b). A petition to accept and treat an improper application filed under 37 CFR 1.53(d) as a proper application under 37 CFR 1.53(b) must include: (1) the $130.00 petition fee, and (2) a true copy of the complete nonprovisional application, as filed, designated as the prior nonprovisional application in the application papers filed under 37 CFR 1.53(d). The petition filed on 27 December, 2000, states that it is accompanied by a true copy of the specification, drawings, and declaration filed in the prior application.

As the two (2) month time limit as specified in the decision mailed on 19 July, 2001, is discretionary, the two (2) month time period for response is waived under the circumstances of this case.

The application file is being forwarded to Initial Patent Examination Division for further processing with a filing date of 18 June, 2001.

Telephone inquiries concerning this matter may be directed to Petitions Attorney Douglas I. Wood at (703)308-6918.

Beverly M. Flanagan
Supervisory Petitions Examiner
Office of Petitions
Office of the Deputy Commissioner
for Patent Examination Policy

UNITED STATES PATENT AND TRADEMARK OFFICE

Under Secretary of Commerce for Intellectual Property and
Director of the United States Patent and Trademark Office
Washington, D.C. 20231
www.uspto.gov

Paper No. 5

FRANK C. PRICE
13812 SANDHURST PLACE
SANTA ANA, CA 92705

COPY MAILED
JAN 29 2002
OFFICE OF PETITIONS

In re Application of
Joseph L. Waisman et al
Application No. 09/348,142
Filed: July 2, 1999
Attorney Docket No. CIP-1

AND

In re Application of
Joseph L. Waisman et al
Application No. **09/887,693**
Filed: September 18, 2001
Attorney Docket No. CIP-2

DECISION ON PETITION
GRANTING FILING DATE

This is in response to the informal communication received October 9, 2001, which is a marked-up copy of a filing receipt. The informal communication of October 9, 2001 is being treated as a petition requesting that an application number and filing date of September 18, 2001 be assigned to "CIP-2" papers filed pursuant to the provisions of 37 CFR 1.53(b) in the name of Joseph L. Waisman et al.

The petition is granted.

The application papers indicated as being for a "CIP-2" and received in the PTO on September 18, 2001 were inadvertently placed in the filewrapper of parent Application No. 09/348,142. These papers have been removed from parent Application No. 09/348,142 and placed in a new filewrapper with an assigned application number of 09/887,693 and accorded a filing date of September 18, 2001. All future communications regarding this file should be directed to Application No. 09/887,693.

Along with the informal communication of October 9, 2001, petitioner submitted a "Nonpublication Request Under 35 U.S.C. 122(b)(2)(B)(i)" for the CIP-2 application

papers filed on September 18, 2001, which by this decision, was assigned Application No. 09/887,693 and accorded a filing date of September 18, 2001.

The statute at 35 U.S.C. 122(b) requires the United States Patent and Trademark Office (USPTO) to publish utility and plant applications filed on or after November 29, 2000, unless applicant makes a nonpublication request **upon filing**. The requirement that a nonpublication request must be made upon filing of the application is set forth in the statute. *See* 35 U.S.C. 122(b)(2)(B)(i). Therefore, the USPTO does not have the authority to accept a nonpublication request after the filing of an application. Accordingly, the nonpublication request filed on October 9, 2001 for Application No. 09/887,693 will not be recognized.

If applicants desire to avoid publication of Application No. 09/887,693, applicants may wish to file a continuation application under 37 CFR 1.53(b) claiming benefit to the above-identified applications under 35 U.S.C. 120 with a nonpublication request and, thereafter, abandon Application No. 09/887,693 by filing a petition under 37 CFR 1.138(c) for express abandonment to avoid publication, including a petition fee ($130.00). This petition should be mailed to Box PGPUB-ABD or faxed to the Pre-Grant Publication Division at (703) 305-8568.

Parent Application No. 09/348,142 is being forwarded to Technology Center AU 3641 for processing as an abandoned application

Application No. 09/887,693 is being forwarded to the Office of Initial Patent Examination for preexamination processing with a filing date of September 18, 2001 and for mailing of a filing receipt with a projected publication date.

Telephone inquiries regarding this communication should be directed to Frances Hicks at (703) 305-8680.

Brian Hearn

Brian Hearn
Senior Petitions Examiner
Office of Petitions
Office of the Deputy Commissioner
for Patent Examination Policy

UNITED STATES PATENT AND TRADEMARK OFFICE

COMMISSIONER FOR PATENTS
UNITED STATES PATENT AND TRADEMARK OFFICE
WASHINGTON, D.C. 20231
www.uspto.gov

Paper No.

JOEL E. LUTZKER, ESQ.
SCHULTE ROTH & ZABEL LLP
919 THIRD AVENUE
New York, NY 10022

COPY MAILED

FEB 1 4 2002

OFFICE OF PETITIONS

In re Application of
Obara et al.
Application No. 09/608,260
Filed: June 30, 2000
Attorney Docket No. 861975/32

In re Application of
Obara et al.
Application No. 09/887,695
Filed: September 24, 2001
For: ANTI-FRICTION BEARING

DECISION GRANTING PETITION

This is a decision on petition under 37 CFR § 1.53(e),[1] filed October 30, 2001, requesting that an improper Continued Prosecution Application (CPA) under 37 CFR § 1.53(d) be treated as an application under 37 CFR § 1.53(b) and be accorded a filing date of September 24, 2001.

On March 22, 2001, a nonfinal Office action was mailed in application No. 09/608,260, which set a three (3) month shortened statutory period for reply. In response, on Monday, September 24, 2001, applicants submitted a petition for a three (3) month extension of time and a request for a CPA under 37 CFR § 1.53(d) based on prior application No. 09/608,260. However, CPA practice no longer applies to applications, other than design applications, if the prior application was filed on

[1] The instant petition is being treated as a petition under 37 CFR 1.53(e). Accordingly, the petition under 37 CFR 1.137(b), filed in the alternative, is dismissed as moot.

or after May 29, 2000.[2] Accordingly, the CPA request was improper because the prior application was filed on or after May 29, 2000.

In the event that an applicant files a request for a CPA of a utility or plant application that was filed on or after May 29, 2000 (to which CPA practice no longer applies), the Office will automatically treat the improper CPA as a request for continued examination of the prior application (identified in the request for CPA) under new 37 CFR § 1.114.

On September 27, 2001, a Notice of Abandonment was mailed. In this instance, prosecution was not closed because the last office action was nonfinal. Because the RCE was not accompanied by a reply, the time period set forth in the last Office action continued to run from the mail date of that action. Therefore, since the RCE was improper and the statutory period for reply expired, the application became abandoned.

On October 30, 2001, applicants filed the present petition. Applicants requested that the improper CPA be converted to an application under 37 CFR § 1.53(b). With the present petition, applicant submitted a complete copy of the prior application as filed, an amendment not previously entered in the prior application, an executed declaration, and an authorization to charge the necessary fees to counsel's Deposit Account.

The petition is granted.

The application under 37 CFR 1.53(b) has been assigned application No. 09/887,695 with a filing date of September 24, 2001. The CPA request, the present petition, the copy of the prior application, the declaration, and the amendment have been removed from the file of application No. 09/608,260 and have been placed in application No. 09/887,695. A copy of the CPA request and the present petition will be retained in application No. 09/608,260 to complete the record therein.

All further correspondence concerning the application under 37 CFR 1.53(b) should be directed to application No. 09/887,695 not application No. 09/608,260.

---

[2] Applicants filed Application No. 09/608,260 on June 30, 2000. Thus, 37 CFR 1.53(d)(1)(i) does not permit the filing of the CPA on September 24, 2001.

The Office finance records will be corrected to show that applicants paid the $130.00 petition fee, $168.00 claim fees, and the $710.00 basic filing fee in application No. 09/887,695, not in application No. 09/608,260. Additionally, the $1,280.00 petition fee to revive an application abandoned unintentionally, will be credited to Deposit Account No. 50-0675.

Application No. 09/608,260 will be forwarded to Files Repository.

Application No. 09/887,695 will be forwarded to the Office of Initial Patent Examination for processing as an application filed under 37 CFR 1.53(b), not under 37 CFR 1.53(d). **Additionally, the Office of Initial Patent Examination is directed to accord Application No. 09/887,695 a filing date of September 24, 2001, using the copy of the original application papers submitted on October 30, 2001.**

Telephone inquiries concerning this matter may be directed to Petitions Attorney Christina Tartera Donnell at (703)306-5589.

Eugenia A. Jones

Eugenia A. Jones
Senior Legal Advisor
Office of Patent Legal Administration
Office of the Deputy Commissioner
for Patent Examination Policy

CTD

UNITED STATES PATENT AND TRADEMARK OFFICE

Commissioner for Patents
United States Patent and Trademark Office
P.O. Box 1450
Alexandria, VA 22313-1450
www.uspto.gov

Seagate Technology
c/o Mofo Nova
1650 Tysons Boulevard
Suite 300
Mclean, VA 22102

COPY MAILED

JUN 07 2007

OFFICE OF PETITIONS

In re Application of	:	
Shih-Fu Lee et al.	:	
Application No. 09/887,697	:	DECISION ON PETITION
Filed: November 01, 2001	:	TO WITHDRAW
Attorney Docket No. 146712013800	:	FROM RECORD
	:	

This is a decision on the Request to Withdraw as attorney or agent of record under 37 C.F.R. § 1.36(b), filed March 30, 2007.

The request is **NOT APPROVED**.

A grantable request to withdraw as attorney/agent of record must be signed by every attorney/agent seeking to withdraw or contain a clear indication that one attorney is signing on behalf of another/others. A request to withdraw will not be approved unless at least 30 (thirty) days would remain between the date of approval and the later of the expiration date of a time to file a response or the expiration date of the maximum time period which can be extended under 37 C.F.R. § 1.136(a).

The request cannot be approved because the customer number listed on the request to withdraw is not of record.

Applicant is advised that a Revocation of Power of Attorney submitted on June 23, 2006 by the assignee, appointed customer number 50268 as attorneys of record.

All future communications from the Office will continue to be directed to the above-listed address until otherwise notified by applicant. A courtesy copy will be mailed to the address noted on the request to withdraw. If this firm would like to receive future correspondence regarding this application, the proper power of documents must be submitted.

A non-final rejection was filed on January 25, 2007. Failure to timely respond will result in the abandonment of this application.

Telephone inquiries concerning this decision should be directed to Kimberly Inabinet at 571-272- 4618.

Frances Hicks
Petitions Examiner
Office of Petitions

cc: Raj S. Dave
Darby & Darby P.C.
1500 K Street, N.W.
Suite 250
Washington, DC 20005-1714

UNITED STATES PATENT AND TRADEMARK OFFICE

COMMISSIONER FOR PATENTS
UNITED STATES PATENT AND TRADEMARK OFFICE
WASHINGTON, D.C. 20231
www.uspto.gov

Paper No.

PAMELA J. CURBELO
CANTOR COLBURN, LLP
55 GRIFFIN ROAD SOUTH
BLOOMFIELD, CT 06002

COPY MAILED

JAN 25 2002

OFFICE OF PETITIONS

In re Application of
Raphael Mestanza
Application No. 09/313,063
Filed: May 17, 1999
Attorney Docket No. 8CL-7194

DECISION GRANTING PETITION

In re Application of
Raphael Mestanza
Application No. 09/887,698
Filed: September 22, 2000
Attorney Docket No. 8CL-7194(GP1-0075)

This is a decision on the petition filed January 9, 2002, requesting that a Continued Prosecution Application (CPA) filed September 22, 2000, based on prior application No. 09/313,063 be treated as an application under 37 CFR 1.53(b) and accorded a filing date of September 22, 2000.

The request for a CPA based on prior application No. 09/313,063 was deposited on September 22, 2000[1]. Since the issue fee was paid in the prior application on July 19, 2000, a petition to withdraw the application from issue was also filed on September 22, 2000. However, the petition and the file of the prior application were not received by the appropriate official within sufficient time to avert issuance of the prior application as U.S. Patent No. 6,136,945 on October 24, 2000. Accordingly, the CPA request cannot be processed as a proper CPA.

The present petition is filed in response to the decision mailed October 22, 2001, in the prior application. Petitioner requests that the request for a CPA be treated as a continuation application filed under 37 CFR 1.53(b). The petition is accompanied by, inter alia, a specification, drawings and a copy of a signed declaration from the prior application.

The petition is granted. Under the circumstances of this case, no petition fee has been charged to counsel's deposit account, nor is one due.

---

[1]A copy of the papers filed on September 22, 2000 were provided on October 16, 2001. While the original papers cannot be located, the evidence is convincing that the papers were filed on September 22, 2000, and subsequently misplaced in the PTO.

The continuation application under 37 CFR 1.53(b) has been assigned application No. 09/887,698. All further correspondence concerning the continuation application filed on February 20, 2001, should be directed to application No. 09/887,698.

In view of this decision, a copy of the CPA request and post card receipt dated September 22, 2000 provided on October 16, 2001, and the petition filed on January 9, 2002, have been removed from the file of Application No. 09/313,063 and placed in the file of application No. 09/887,698. The CPA filing fee paid in Application No. 09/313,063 on September 22, 2000 will be applied to Application No. 09/887,698.

Since the petition under 37 CFR 1.313(c) was timely filed but a decision thereon was not rendered prior to the parent application issuing as a patent, the procedures set forth below should be followed.

> If the information disclosure statement (IDS) filed along with or referred to in the petition under 37 CFR 1.313(c) complies with the requirements of 37 CFR 1.97 and 1.98, it will be considered by the examiner in the continuing application filed under 37 CFR 1.53(b).
>
> The examiner should make all applicable prior art rejections in the 37 CFR 1.53(b) application (not just include a statutory double patenting rejection under 35 U.S.C. 101) based on the information cited in the IDS, alone or with other information, including any new art found in updating an old search or performing a new search.
>
> If the examiner determines that the information cited in the IDS, alone or in combination with other information does not raise a question of unpatentability with respect to the claims in the continuing application (which are identical to the claims in the parent patent), then the examiner should make a statutory double patenting rejection under 35 U.S.C. 101. Applicant may then abandon the continuing application.
>
> If the examiner determines that the information cited in the IDS, alone or in combination with other information raises a prima facie case of unpatentability with respect to the claims in the continuing application (which are identical to the claims in the parent patent), then the examiner should make the appropriate prior art rejection along with the statutory double patenting rejection under 35 U.S.C. 101. If prosecution of the continuing application results in an amendment of the claims due to unpatentability, a statutory disclaimer of the unpatentable claims must be filed in the parent patent, and a terminal disclaimer can be filed in the continuing application if the amended claims would have been obvious over any claim of the parent patent so as to permit the continuing application to issue with the amended claims.

Prior Application No. 09/313,063 is being returned to the files repository.

Application No. 09/887,698 is being forwarded to Initial Patent Examination Division for processing as a continuation application under 37 CFR 1.53(b), <u>not as a CPA under 37 CFR 1.53(d)</u>, with a filing date of September 22, 2000, using the copy of the specification, drawings and declaration supplied on January 9, 2002.

Telephone inquires related to this decision should be directed to the undersigned at (703) 305-9220. Telephone inquiries related to OIPE processing should be directed to their hotline at (703) 308-1202.

Sherry D. Brinkley

Sherry D. Brinkley
Petitions Examiner
Office of Petitions
Office of the Deputy Assistant Commissioner
for Patent Policy and Projects

Paper No.

JOHN O'TOOLE
PO BOX 1113
MINNEAPOLIS, MN 55440

In re Patent No. 6,197,355 :
Issued: March 6, 2001 :
Application No. 09/392,182 :
Filed: September 9, 1999 : DECISION GRANTING
Attorney Docket No. GMI 5183 : PETITION
FOR: METHOD FOR PROCESSING AN :
AERATED CONFECTIONERY FOAM ROPE :
:
In re Application of :
Zietlow, et al. :
Application No. 09/887,702 :
Filed: March 1, 2001 :
Attorney Docket No. GMI 5183D1 :
FOR: METHOD FOR PROCESSING AN
AERATED CONFECTIONERY FOAM ROPE

This is a decision on the petition, filed September 7, 2001, requesting that a Continued Prosecution Application (CPA) deposited March 1, 2001, based on prior application No. 09/392,182 be treated as an application under 37 CFR 1.53(b) and be accorded a filing date of March 1, 2001. The petition was forwarded to the Office of Petitions on February 19, 2002. The Office apologizes for any inconvenience caused by the delay in addressing the present petition.

A request for a CPA based on prior application No. 09/392,182 was submitted on March 1, 2001. The issue fee was paid in the prior application on January 9, 2001 and the prior application issued as Patent No. 6,197,355 on March 6, 2001.

Because the CPA was filed after payment of the issue fee, it is improper and the CPA request cannot be processed as a proper CPA. 37 CFR 1.53(d)(1)(ii)(A). Also, since the prior application has issued as a patent, the CPA request cannot be processed as a proper CPA.

However, the CPA request was filed while the prior application was still pending and was accompanied by a specification, drawings, a copy of the signed declaration filed in the prior application, the filing fee, and a preliminary amendment. Petitioners state that the application was mistakenly filed as a CPA under 37 CFR 1.53(d), when it was intended to be filed under 37 CFR 1.53(b). The present petition requests that the application filed as a CPA under 37 CFR 1.53(d) be treated as a divisional application filed under 37 CFR 1.53(b).

The petition is **granted**.

The divisional application papers filed on March 1, 2001 have been removed from the file of application No. 09/392,182, and have been assigned Application No. 09/887,702. All future correspondence relating to the divisional application should be directed to Application No. 09/887,702.

The $130.00 petition has been charged to Deposit Account No. 07-0900 as authorized in the petition. The $710.00 filing fee paid March 1, 2001 will be transferred to the divisional application No. 09/887,702. It appears that a one month extension of time was charged on March 1, 2001. This fee is unnecessary and will be refunded to petitioners' deposit account No. 07-0900.

After mailing of this decision, PTO records will be corrected to show that the $710.00 filing fee paid on March 1, 2001, was paid in application No. 09/887,702, not in application No. 09/392,182.

The patented file (Application No. 09/392,182; Patent No. 6,197,355) is being forwarded to Files Repository.

Application No. 09/887,702 is being returned to the Office of Initial Patent Examination for further processing as a divisional application filed under 37 CFR 1.53(b), not under 37 CFR 1.53(d), with a filing date of March 1, 2001, using the copy of the specification, drawings and declaration filed on March 1, 2001. The Office of Initial Patent Examination will issue a filing receipt in due course.

Telephone inquiries specific to this matter should be directed to Petitions Attorney E. Shirene Willis at (703) 308-6712.

Beverly M. Flanagan
Supervisory Petitions Examiner
Office of Petitions
Office of the Deputy Commissioner
for Patent Examination Policy

UNITED STATES PATENT AND TRADEMARK OFFICE

COMMISSIONER FOR PATENTS
UNITED STATES PATENT AND TRADEMARK OFFICE
WASHINGTON, D.C. 20231
www.uspto.gov

Paper No. 4

COPY MAILED

MAR 0 7 2002

OFFICE OF PETITIONS

WESLEY W. WHITMYER, JR.
ST. ONGE STEWARD JOHNSTON
& REENS, LLC
986 BEDFORD STREET
STAMFORD, CT 06905-5619

In re Application of
DiCesare, et al
Application No. 09/887,703
Filed: March 29, 2001
Attorney Docket No. 03141-P0349A

: DECISION GRANTING
: PETITION

This is a decision on the petition filed January 29, 2002 (certificate of mailing October 26, 2001) under 37 CFR 1.10(e), requesting that the above-identified application be accorded a filing date of March 29, 2001.

Petitioners request a March 29, 2001 filing date on the basis that the application was deposited in Express Mail service on March 29, 2001, pursuant to the requirements of 37 CFR 1.10. The petition is accompanied a complete copy of petitioners' file, including a fee transmittal form, 47 pages of specification, 6 pages of drawings, 2 pages of declaration, 2 pages of a patent assignment recordation form cover sheet, and 2 pages of an assignment. In addition, petitioner submitted a copy of Express Mail label EL574209483US showing an illegible date-in, a copy of check No. 042843 for $750.00, a copy of check No. 45760 for $130.00, two postcard receipts for the October 26, 2001 petition and the March 29, 2001 initial filing, and a letter from the United States Postal Office stating that Express Mail package EL574209483US was delivered to the addressee on March 30, 2001. The same Express Mail label number is found on the original application papers. The petition is supported by the declaration of Lori J. Giuffirda, who attests to the fact that she deposited the original application as Express Mail with the USPS on March 29, 2001. Ms. Giuffirda states that the papers submitted with the instant petition are copies of the original application papers.

Paragraph (e) of 37 CFR 1.10 states that:

> Any person mailing correspondence addressed as set out in 1.1(a) to the Office with sufficient postage utilizing the "Express Mail Post Office to Addressee" service of the USPS, but not received by the Office, may petition the Commissioner to consider such correspondence as filed in the Office on the USPS deposit date, provided that:
>
> (1) The petition is filed promptly after the person becomes aware that the Office has no evidence of receipt of the correspondence;
>
> (2) The number of the "Express Mail" mailing label was placed on the paper(s) or fee(s) that constitute the correspondence prior to the original

mailing by "Express Mail";

(3) The petition includes a copy of the originally deposited paper(s) or fee(s) that constitute the correspondence showing the number of the "Express Mail" mailing label thereon, a copy of any returned postcard receipt, a copy of the "Express Mail" mailing label showing the "date-in," a copy of any other official notation by the USPS relied upon to show the date of deposit, and, if the requested filing date is a date other than the "date-in" on the "Express Mail" mailing label or other official notation entered by the USPS, a showing pursuant to paragraph (d)(3) of this section that the requested filing date was the date the correspondence was deposited in the "Express Mail Post Office to Addressee" service prior to the last scheduled pickup for that day; and

(4) The petition includes a statement which establishes, to the satisfaction of the Commissioner, the original deposit of the correspondence and that the copies of the correspondence, the copy of the "Express Mail" mailing label, the copy of any returned postcard receipt, and any official notation entered by the USPS are true copies of the originally mailed correspondence, original "Express Mail" mailing label, returned postcard receipt, and official notation entered by the USPS.

While the "date-in" on petitioners' Express Mail mailing label is illegible, an independent search of the USPTO's USPS Express Mail Information Database revealed that Express Mail package EL574209483US was accepted by the USPS on March 29, 2001 at 6:21 pm. This information, considered in conjunction with the declaration of Lori J. Giuffirda, and the fact that the original application papers contain the Express Mail number EL574209483US affixed thereto, establishes to the satisfaction of the Commissioner that the application was deposited in Express Mail on March 29, 2001 prior to the last scheduled pickup.

Accordingly, the petition is granted.

Petitioners' checks, check no. 042843 for $750.00 and check No. 45760 for $130.00, cannot be located. Pursuant to petitioners' authorization, deposit account No. 19-4516 will be charged the $710.00 filing fee and the $40.00 recordation of assignment fee. No fee has been or will be charged for the filing of the instant petition.

The application is being forwarded to the Office of Initial Patent Examination for further processing with a filing date of **March 29, 2001.**

Thereafter, the application will be forwarded to the appropriate Technology Center for examination in due course.

Any inquiries related to this decision should be directed to the undersigned at (703) 308-6712.

E. Shirene Willis

E. Shirene Willis
Petitions Attorney
Office of Petitions
Office of the Deputy Commissioner
for Patent Examination Policy

UNITED STATES PATENT AND TRADEMARK OFFICE

COMMISSIONER FOR PATENTS
UNITED STATES PATENT AND TRADEMARK OFFICE
WASHINGTON, D.C. 20231
www.uspto.gov

Wesley W. Whitmyer, Jr.
St. Onge Steward Johnston
& Reens LLC
986 Bedford Street
Stamford, CT 06905-5619

COPY MAILED

MAY 0 2 2002

OFFICE OF PETITIONS

In re Application of
Joseph L. DiCesare et al.
Application No. 09/645,977
Filed: March 29, 2001
Attorney Docket No. 03141-P0349A

: DECISION GRANTING PETITION

This is a decision on the petition filed February 6, 2002, requesting that a patent application of Joseph L. DiCesare et al. (attorney docket No. 03141-P0349A) be accorded a filing date of March 29, 2001, as a nonprovisional application under 37 CFR 1.53(b).

Petitioner alleges that the original application papers were deposited in Express Mail service in accordance with the procedures set forth in 37 CFR 1.10 and that the application is entitled to the date of deposit in Express Mail service as the filing date. In support, petitioners have supplied a copy of the original application papers showing the Express Mail label No. EL 574209483US thereon. The petition is accompanied by a copy of Express Mail receipt No. EL 574209483US (the same Express Mail number found on the original application papers). However, the legibility of the copy of Express Mail receipt No. EL 574209483US is such that the USPS "date-in" entry cannot be positively identified.

A review of USPS records conducted at the U.S. Patent and Trademark Office prior to this decision using "USPTO's USPS Express Mail Information Database" reveals that the date and time the package identified by Express Mail receipt No. EL 574209483US was accepted by the USPS was March 29, 2001 at 6:21 p.m. A copy of a printout of the relevant USPS records is being provided with this decision.

Based on the evidence above, the petition to accord the nonprovisional application a filing date of March 29, 2001 is granted. No petition fee is due, and none has been charged.

The original application papers for the 03141-P0349A application cannot be located. The petition and the duplicate papers received February 6, 2002, have been placed in a new nonprovisional application file wrapper, and assigned application No. 09/645977.

Applicants should notify this office if the original application papers are subsequently discovered in the Office so that the present duplicate file can be merged with the original papers and any duplicate filing fee refunded.

The $ 710.00 nonprovisional application filing fee will be charged to applicant's deposit account No. 19-4516 after mailing of this decision.

The nonprovisional application is being forwarded to the Office of Initial Patent Examination for further processing with a filing date of March 29, 2001, using the copy of the application papers supplied February 6, 2002.

Any inquiries related to this decision should be directed to Darnell M. Jayne at (703) 305-3310.

James J. Engel
Legal Advisor
Office of Patent Legal Administration
Office of the Deputy Commissioner
for Patent Examination Policy

dmj
Attachment: Printout from "USPTO's USPS Express Mail Information Database"

OIPE
SEP 0 3 2002
JC65
PATENT & TRADEMARK OFFICE

UNITED STATES PATENT AND TRADEMARK OFFICE

COMMISSIONER FOR PATENTS
UNITED STATES PATENT AND TRADEMARK OFFICE
WASHINGTON, D.C. 20231
www.uspto.gov

RECEIVED
St. OngeSteward Johnston & Reens
MAY 1 0 2002
FILE
DKT

Wesley W. Whitmyer, Jr.
St. Onge Steward Johnston
& Reens LLC
986 Bedford Street
Stamford, CT 06905-5619

COPY MAILED
MAY 0 2 2002
OFFICE OF PETITIONS

In re Application of
Joseph L. DiCesare et al.
Application No. 09/645,977
Filed: March 29, 2001
Attorney Docket No. 03141-P0349A

DECISION GRANTING PETITION

This is a decision on the petition filed February 6, 2002, requesting that a patent application of Joseph L. DiCesare et al. (attorney docket No. 03141-P0349A) be accorded a filing date of March 29, 2001, as a nonprovisional application under 37 CFR 1.53(b).

Petitioner alleges that the original application papers were deposited in Express Mail service in accordance with the procedures set forth in 37 CFR 1.10 and that the application is entitled to the date of deposit in Express Mail service as the filing date. In support, petitioners have supplied a copy of the original application papers showing the Express Mail label No. EL 574209483US thereon. The petition is accompanied by a copy of Express Mail receipt No. EL 574209483US (the same Express Mail number found on the original application papers). However, the legibility of the copy of Express Mail receipt No. EL 574209483US is such that the USPS "date-in" entry cannot be positively identified.

A review of USPS records conducted at the U.S. Patent and Trademark Office prior to this decision using "USPTO's USPS Express Mail Information Database" reveals that the date and time the package identified by Express Mail receipt No. EL 574209483US was accepted by the USPS was March 29, 2001 at 6:21 p.m. A copy of a printout of the relevant USPS records is being provided with this decision.

Based on the evidence above, the petition to accord the nonprovisional application a filing date of March 29, 2001 is granted. No petition fee is due, and none has been charged.

The original application papers for the 03141-P0349A application cannot be located. The petition and the duplicate papers received February 6, 2002, have been placed in a new nonprovisional application file wrapper, and assigned application No. 09/645977.

Applicants should notify this office if the original application papers are subsequently discovered in the Office so that the present duplicate file can be merged with the original papers and any duplicate filing fee refunded.

The $ 710.00 nonprovisional application filing fee will be charged to applicant's deposit account No. 19-4516 after mailing of this decision.

The nonprovisional application is being forwarded to the Office of Initial Patent Examination for further processing with a filing date of March 29, 2001, using the copy of the application papers supplied February 6, 2002.

Any inquiries related to this decision should be directed to Darnell M. Jayne at (703) 305-3310.

James J. Engel
Legal Advisor
Office of Patent Legal Administration
Office of the Deputy Commissioner
for Patent Examination Policy

dmj
Attachment: Printout from "USPTO's USPS Express Mail Information Database"

SEP 0 3 2002
PATENT & TRADEMARK OFFICE

UNITED STATES PATENT AND TRADEMARK OFFICE

RECEIVED
St. OngeSteward Johnston & Reens
MAR 1 5 2002
FILE
DKT

COMMISSIONER FOR PATENTS
UNITED STATES PATENT AND TRADEMARK OFFICE
WASHINGTON, D.C. 20231
www.uspto.gov

Paper No. 4

WESLEY W. WHITMYER, JR.
ST. ONGE STEWARD JOHNSTON
& REENS, LLC
986 BEDFORD STREET
STAMFORD, CT 06905-5619

COPY MAILED
MAR 0 7 2002
OFFICE OF PETITIONS

In re Application of
DiCesare, et al
Application No. 09/887,703
Filed: March 29, 2001
Attorney Docket No. 03141-P0349A

: DECISION GRANTING
: PETITION

This is a decision on the petition filed January 29, 2002 (certificate of mailing October 26, 2001) under 37 CFR 1.10(e), requesting that the above-identified application be accorded a filing date of March 29, 2001.

Petitioners request a March 29, 2001 filing date on the basis that the application was deposited in Express Mail service on March 29, 2001, pursuant to the requirements of 37 CFR 1.10. The petition is accompanied a complete copy of petitioners' file, including a fee transmittal form, 47 pages of specification, 6 pages of drawings, 2 pages of declaration, 2 pages of a patent assignment recordation form cover sheet, and 2 pages of an assignment. In addition, petitioner submitted a copy of Express Mail label EL574209483US showing an illegible date-in, a copy of check No. 042843 for $750.00, a copy of check No. 45760 for $130.00, two postcard receipts for the October 26, 2001 petition and the March 29, 2001 initial filing, and a letter from the United States Postal Office stating that Express Mail package EL574209483US was delivered to the addressee on March 30, 2001. The same Express Mail label number is found on the original application papers. The petition is supported by the declaration of Lori J. Giuffirda, who attests to the fact that she deposited the original application as Express Mail with the USPS on March 29, 2001. Ms. Giuffirda states that the papers submitted with the instant petition are copies of the original application papers.

Paragraph (e) of 37 CFR 1.10 states that:

> Any person mailing correspondence addressed as set out in 1.1(a) to the Office with sufficient postage utilizing the "Express Mail Post Office to Addressee" service of the USPS, but not received by the Office, may petition the Commissioner to consider such correspondence as filed in the Office on the USPS deposit date, provided that:
>
> (1) The petition is filed promptly after the person becomes aware that the Office has no evidence of receipt of the correspondence;
>
> (2) The number of the "Express Mail" mailing label was placed on the paper(s) or fee(s) that constitute the correspondence prior to the original

mailing by "Express Mail";

(3) The petition includes a copy of the originally deposited paper(s) or fee(s) that constitute the correspondence showing the number of the "Express Mail" mailing label thereon, a copy of any returned postcard receipt, a copy of the "Express Mail" mailing label showing the "date-in," a copy of any other official notation by the USPS relied upon to show the date of deposit, and, if the requested filing date is a date other than the "date-in" on the "Express Mail" mailing label or other official notation entered by the USPS, a showing pursuant to paragraph (d)(3) of this section that the requested filing date was the date the correspondence was deposited in the "Express Mail Post Office to Addressee" service prior to the last scheduled pickup for that day; and

(4) The petition includes a statement which establishes, to the satisfaction of the Commissioner, the original deposit of the correspondence and that the copies of the correspondence, the copy of the "Express Mail" mailing label, the copy of any returned postcard receipt, and any official notation entered by the USPS are true copies of the originally mailed correspondence, original "Express Mail" mailing label, returned postcard receipt, and official notation entered by the USPS.

While the "date-in" on petitioners' Express Mail mailing label is illegible, an independent search of the USPTO's USPS Express Mail Information Database revealed that Express Mail package EL574209483US was accepted by the USPS on March 29, 2001 at 6:21 pm. This information, considered in conjunction with the declaration of Lori J. Giuffirda, and the fact that the original application papers contain the Express Mail number EL574209483US affixed thereto, establishes to the satisfaction of the Commissioner that the application was deposited in Express Mail on March 29, 2001 prior to the last scheduled pickup.

Accordingly, the petition is granted.

Petitioners' checks, check no. 042843 for $750.00 and check No. 45760 for $130.00, cannot be located. Pursuant to petitioners' authorization, deposit account No. 19-4516 will be charged the $710.00 filing fee and the $40.00 recordation of assignment fee. No fee has been or will be charged for the filing of the instant petition.

The application is being forwarded to the Office of Initial Patent Examination for further processing with a filing date of **March 29, 2001.**

Thereafter, the application will be forwarded to the appropriate Technology Center for examination in due course.

Any inquiries related to this decision should be directed to the undersigned at (703) 308-6712.

E. Shirene Willis
Petitions Attorney
Office of Petitions
Office of the Deputy Commissioner
for Patent Examination Policy

UNITED STATES PATENT AND TRADEMARK OFFICE

COMMISSIONER FOR PATENT
UNITED STATES PATENT AND TRADEMARK OFFIC
WASHINGTON, D.C. 2023
www.uspto.go

McLEOD & MOYNE, P.C.
2190 Commons Parkway
Okemos, Michigan 48864

COPY MAILED

MAR 1 8 2003

OFFICE OF PETITIONS

In re Application of
Joseph DiCesare et al
Application No. 09/887,703
Filed: March 29, 2001
Attorney Docket No. 03141-P0349A

~~In re Application of~~
~~Joseph DiCesare et al~~
~~Application No. 09/645,977~~
~~Filed: March 29, 2001~~
~~Attorney Docket No. 03141-P0349A~~

DECISION MERGING FILES

This is in response to the "Request to Merge Pending Patent Applications" filed September 3, 2002, which is being treated as a petition requesting that the file of application No. 09/645,977 be merged into the file of application No. 09/887,703 and that any duplicate fees be refunded.

The petition is granted.

On January 29, 2002 petitioners filed a 37 CFR 1.10(e) petition requesting that duplicate application papers accompanying the petition be accorded a filing date of March 29, 2001 (the date corresponding original application papers were filed). The January 29, 2002 petition is an additional copy of the original petition deposited in the mail on October 26, 2001 according to its 37 CFR 1.8 certificate of mailing. The certificate of mailing date (October 26, 2001) is during a period when the Office was being affected by USPS mail delays. See Processing of, and Requirements for, the Filing of Duplicate Applications and Papers in Patent Applications in view of USPS Mail Delays; Notice, 1254 Off. Gaz. Pat. Office 92 (January 15, 2002).

On February 6, 2002 the original petition under 37 CFR 1.10(e) with the October 26, 2001 certificate of mailing was received in the Office after a delay in the mail.

On March 7, 2002, a Decision referencing the duplicate petition was mailed according a March 29, 2001 filing date to the duplicate application papers supplied on January 29, 2002, and indicating 09/887,703 as the application number for those papers.

On May 2, 2002 a Decision referencing the later-received original petition was mailed which granted the same request under 37 CFR 1.10(e) previously granted on March 7, 2002. As a result, the May 2, 2002 Decision assigned application number 09/645,977 to duplicate application papers identical to those already contained in the file of application No. 09/887,703.

As requested, the papers present in the file of application No. 09/645,977 will be merged into the file of application No. 09/887,703. All fees relating to application No. 09/645,977 are being credited to counsel's deposit account no. 13-0610.

Receipt is acknowledged in application No. 09/887,703 of the December 23, 2002 new power of attorney by the assignee of the entire interest and revocation of the previous power of attorney.

The applications are being forwarded to the Office of Initial Patent Examination for merging the file of application No. 09/645,977 into the file of application No. 09/887,703. The merged application No. 09/887,703 will maintain the presently accorded filing date of March 29, 2001. In addition, the correspondence address in merged application No. 09/887,703 will be changed in accordance with the new power of attorney filed on December 23, 2002. Application No. 09/645,977 will no longer be an active application number.

Application No. 09/887,703 will then be forwarded to the Technology Center 1743 for examination in due course.

Any inquiries related to this decision should be directed to Legal Advisor James Engel at (703) 308-5106.

Eugenia Jones

Eugenia Jones
Senior Legal Advisor
Office of Patent Legal Administration
Office of the Deputy Commissioner
for Patent Examination Policy

JJE

UNITED STATES PATENT AND TRADEMARK OFFICE

COMMISSIONER FOR PATENTS
UNITED STATES PATENT AND TRADEMARK OFFICE
WASHINGTON, D.C. 20231
www.uspto.gov

Paper No. 3

James F. Haley, Jr.
Fish & Neave
1251 Avenue of the Americas
New York, NY 10020-1104

In re Application of
Lauffer et al.
Application No. 08/942,989
Filed: October 2, 1997
Attorney Docket No. MET - 7
For: CONTRAST-ENHANCED DIAGNOSTIC IMAGING METHOD FOR MONITORING INTERVENTIONAL THERAPIES

COPY MAILED
MAR - 4 2002
OFFICE OF PETITIONS

In re Application of
Lauffer et al.
Application No. 09/887,706
Filed: September 8, 2000
For: CONTRAST-ENHANCED DIAGNOSTIC IMAGING METHOD FOR MONITORING INTERVENTIONAL THERAPIES

DECISION GRANTING PETITION
AND
ASSIGNMENT OF APPLICATION NUMBER AND NOTICE OF OMITTED ITEMS

This is a decision on the petition under 37 CFR 1.10(d) filed September 29, 2000, requesting that a continuation application of application No. 08/942,989, be accorded a filing date of September 8, 2000, rather than the presently accorded filing date of September 11, 2000. The petition is properly treated under 37 CFR 1.10(c).

Petitioners allege the application was deposited in Express Mail service on September 8, 2000. In support, the petition is accompanied by Express Mail receipt No. EM390216125US (the same Express Mail number found on the original application papers located in the official file) showing a "date-in" of September 8, 2000.

In view of the above, the petition is granted.

The transmittal letter accompanying the application papers filed on September 8, 2000, indicates that an application under 37 CFR 1.53(b) was being filed. The application papers were **not** in any way designated as a CPA filing under 37 CFR 1.53(d). However, the Office erroneously processed the application as a Continued Prosecution Application (CPA) under 37 CFR 1.53(d). Since the application was processed as a CPA, it was assigned the application number of the prior application. Thereafter, a non-final Office action was mailed in application No. 08/942,989 on October 10, 2000. On April 13, 2001, an amendment was filed. A second non-final Office action was mailed on May 29, 2001, and on November 29, 2001, a response was submitted by facsimile. A confirmation copy of the response submitted on November 29, 2001, along with references, was received on December 17, 2001.

Since the transmittal letter clearly indicated that the application was being filed under 37 CFR 1.53(b), the application papers filed September 8, 2000, must be processed as an application under 37 CFR 1.53(b). Accordingly, the application papers filed on September 8, 2000, including the transmittal letter, specification including claims, declaration, small entity statement, and preliminary amendment, have been removed from application No. 08/942,989 and have been assigned a new application number, application No. **09/887,706**. All further communications concerning the continuation application filed on September 8, 2000, should be directed to that application number.

A Notice of Appeal was filed on February 15, 2000, in application No. 08/942,989. A petition for a five month extension of time with the requisite fee was filed on September 8, 2000. Since no appeal brief was filed within the time prescribed by 37 CFR 1.192, the appeal stands dismissed. Because of the dismissal of the appeal, application No. 08/942,989 is **abandoned** because there are no allowed claims. The non-final Office actions mailed on October 10, 2000, and May 29, 2001, were sent in error and are hereby **vacated**. The Office actions will be retained in application No. 08/942,989, but, because application No. 08/942,989 was abandoned prior to the mailing of such Office actions, they are of no effect. See *Lorenz v. Finkl*, 333 F.2d 885, 142 USPQ 26 (CCPA 1964) The amendments filed on April 13, 2001 and November 29, 2001 in response to those Office actions will likewise be retained in application No. 08/942,989. A copy of the transmittal letter for the continuation application and the preliminary amendment filed therewith have also been retained in application No. 08/942,989 in order to complete the record therein.

A review of the application papers filed September 8, 2000, reveals that Figures 1-3 described in the specification appear to have been omitted from the application. 35 USC 113, first sentence states, "the applicant shall furnish a drawing were necessary for the understanding of the subject matter sought to be patented." The application, as filed, includes method claims. It is the current practice of the U.S. Patent and Trademark Office to accept an application having a process or a method claim which is filed without a drawing. Since claims 36-63 are method claims, which by

Office practice do not require a drawing for filing date purposes, the application is entitled to a filing date of September 8, 2000.

As per MPEP 601.01(f), a nonprovisional application having at least one claim directed to subject matter for which a drawing is usually not considered essential for a filing date, which describes drawing figure(s) in the specification but which is filed without drawings, will be treated as an application filed without all of the drawing figures referred to in the specification as discussed in MPEP 601.01(g).

A review of the postcard receipt for the filing of the application, which accompanied the petition, reveals that no sheets of drawings were listed as being among the items being filed. Furthermore, it is noted that the transmittal letter, while only evidence of what was intended to be filed, did not indicate that any sheets of drawings were being filed even though a check box was available to indicate if drawings were being filed.

I. Should applicant contend that the omitted drawings were in fact deposited in the USPTO with the application papers, a petition accompanied by the $130.00 petition fee (37 CFR 1.17(h)) with evidence of such deposit must be filed within **TWO MONTHS** of the date of this Notice. The petition fee will be refunded if it is determined that the drawings were received by the USPTO.

II. Should applicant desire to supply the omitted drawings and accept the date that such omitted drawings were filed in the USPTO as the filing date of the above-identified application, the omitted drawings (with a supplemental oath or declaration in compliance with 37 CFR 1.63 and 1.64 referring to such drawings), and a petition under 37 CFR 1.182, accompanied by the $130.00 petition fee (37 CFR 1.17(h)), requesting the later filing date must be filed within **TWO MONTHS** of the date of this Notice.

III. The failure to file a petition (and petition fee) under the above options (I) or (II) within **TWO MONTHS** of the date of this Notice will be treated as constructive acceptance by the application of the application as deposited in the USPTO. **THIS TWO MONTH PERIOD IS NOT EXTENDABLE UNDER 37 CFR 1.136(a) or (b).** In the absence of a timely filed petition in reply to this Notice, the application will maintain a filing date as of the date of deposit of the application papers in the USPTO, and the original application papers (i.e., the original disclosure of the invention) will include only those application papers present in the USPTO on the date of deposit.

In the event that applicant elects not to take action pursuant to options (I) or (II) above (thereby constructively electing option III), amendment of the specification to cancel all references to any omitted drawings is required. Such amendment should be by way of preliminary amendment submitted prior to the first Office action to avoid delays in the prosecution of the application.

A courtesy copy of this decision is being mailed to the address contained in the "Revocation and New Power of Attorney" filed in application No. 08/942,989 by facsimile on November 29, 2001. No further communications regarding application No. 09/887,706 will be mailed to such address unless a new power of attorney is filed in application No. 09/887,706.

After mailing of this decision, Office records will be corrected to show that filing fees ($345.00 basic filing fee, $72.00 for 8 claims in excess of 20, and $130.00 multiple dependent claim fee) paid on September 8, 2000, were paid in application No. 09/887,706, not in application No. 08/942,989.

Application No. 08/942,989 is being returned to Technology Center Art Unit 1619 for further processing as an abandoned application. As noted above, since an appeal brief was not timely filed, the appeal stands dismissed and the application is abandoned because there are no allowed claims. The amendment filed November 29, 2001, will not be entered or considered by the examiner.

Application No. 09/887,706 is being forwarded to Initial Patent Examination Division for further processing as a continuation application under 37 CFR 1.53(b) with a filing date of **September 8, 2000**, using the application papers filed on that date and to await any reply to the Notice of Omitted Items. If no reply is timely filed within **TWO MONTHS** of this Notice, then the application will be forwarded to the technology center. The PALM bib-data sheet will indicate that 0 sheets of drawings were present on filing.

Telephone inquiries specific to this matter should be directed to the undersigned at (703)306-5586.

Eugenia A. Jones

Eugenia A. Jones
Senior Legal Advisor
Office of Patent Legal Administration
Office of the Deputy Commissioner
for Patent Examination Policy

cc: MARK S. ELLINGER, PH.D
FISH & RICHARDSON P.C., P.A.
60 SOUTH SIXTH STREET
SUITE 3300
MINNEAPOLIS, MN 55402

UNITED STATES PATENT AND TRADEMARK OFFICE

COMMISSIONER FOR PATENTS
UNITED STATES PATENT AND TRADEMARK OFFICE
WASHINGTON, D.C. 20231
www.uspto.gov

JJGJr: 07-02

Paper No. 7

MARK S. ELLINGER
FISH & RICHARDSON P.C., P.A.
60 SOUTH SIXTH ST./SUITE 3300
MINNEAPOLIS, MN 55402

COPY MAILED

AUG 1 9 2002

OFFICE OF PETITIONS

In re Application of
Lauffer, et al.
Application No. 09/887,706
Filed: 8 September, 2000
Attorney Docket No.:
13498-009002/MET-7/Continuation

DECISION ON PETITION

This is a decision on the petition filed on 6 June, 2002, under 37 C.F.R. §1.53(e)[1] and §1.181[2] "To Accord a Filing Date"--notably, however, Petitioners contend that the drawings found to be

---

[1] The regulations at 37 C.F.R. §1.53 provide in pertinent part:
§ 1.53 Application number, filing date, and completion of application.

* * *

(e) *Failure to meet filing date requirements.*
(1) If an application deposited under paragraph (b), (c), or (d) of this section does not meet the requirements of such paragraph to be entitled to a filing date, applicant will be so notified, if a correspondence address has been provided, and given a time period within which to correct the filing error.
(2) Any request for review of a notification pursuant to paragraph (e)(1) of this section, or a notification that the original application papers lack a portion of the specification or drawing(s), must be by way of a petition pursuant to this paragraph accompanied by the fee set forth in § 1.17(h). In the absence of a timely (§ 1.181(f)) petition pursuant to this paragraph, the filing date of an application in which the applicant was notified of a filing error pursuant to paragraph (e)(1) of this section will be the date the filing error is corrected.
(3) If an applicant is notified of a filing error pursuant to paragraph (e)(1) of this section, but fails to correct the filing error within the given time period or otherwise timely (§ 1.181(f)) take action pursuant to this paragraph, proceedings in the application will be considered terminated. Where proceedings in an application are terminated pursuant to this paragraph, the application may be disposed of, and any filing fees, less the handling fee set forth in § 1.21(n), will be refunded.

* * *

[2] The regulations at 37 C.F.R. §1.181 provide, in pertinent part:
§1.181 Petition to the Commissioner.
(a) Petition may be taken to the Commissioner: (1) From any action or requirement of any examiner in the *ex parte* prosecution of an application which is not subject to appeal to the Board of Patent Appeals and Interferences or to the court; (2) In cases in which a statute or the rules specify that the matter is to be determined directly by or reviewed by the Commissioner; and (3) To invoke the supervisory authority of the Commissioner in appropriate circumstances. * * *
(b) Any such petition must contain a statement of the facts involved and the point or points to be reviewed and the action requested. Brief or memoranda, if any, in support thereof should accompany or be embodied in the petition; and where facts are to be proven, the proof in the form of affidavits or declaration (and exhibits, if any) must accompany the petition.
(c) When a petition is taken from an action or requirement of an examiner in the *ex parte* prosecution of an application, it may be required that there have been a proper request for reconsideration (§1.111) and a repeated action by the examiner. The examiner may be directed by the Commissioner to furnish a written statement, within a specified time, setting forth the reasons for his decision upon the matters averred in the petition, supplying a copy thereof to the petitioner.
(d) Where a fee is required for a petition to the Commissioner the appropriate section of this part will so indicate. If any required fee does not accompany the petition, the petition will be dismissed. * * *
(f) Except as otherwise provided in these rules, any such petition not filed within 2 months from the action complained of, may be dismissed as untimely. The mere filing of a petition will not stay the period for reply to an Examiner's action which may be running against an application, nor act as a stay of other proceedings.

* * *

missing from the application "are not necessary for the understanding of the subject matter as sought to be patented."

For the reasons set forth below, the petition is **GRANTED in part**.[3]

The application was filed on 8 September, 2001.

Following a 4 March, 2002, Decision under 37 C.F.R. §1.10, on 29 March, 2002, the Office mailed a "Notice of Incomplete Nonprovisional Application" indicating that the application was filed without drawings as required under 35 U.S.C. §113 (first sentence). Petitioners respond with the instant petition stating that:

- the drawings found to be missing from the application "are not necessary for the understanding of the subject matter as sought to be patented"; and
- with regard to the absent Figures 1 - 3, Petitioners refer each figure to a comparable table in the specification, with the table and the figure as representing the same information set forth in the specification by the tables at page 58 (for Figure 1), pages 60 and 61 (for Figure 2) and pages 62 and 63 (for Figure 3).

Thus, Petitioners contend, the drawings are not necessary for the understanding of the subject matter as sought to be patented.

It is the practice of the Office to treat an application that contains at least one process or method claim as an application for which a drawing is not necessary for the understanding of the invention under 35 U.S.C. §113 (first sentence). (See: MPEP §601.01[4])

---

[3] Pursuant to Petitioner's authorization, the petition fee ($130.00) is refunded to Deposit Account 06-1050.

[4] The commentary at MPEP §601.01 provides in pertinent part:

* * *

601.01(f) Applications Filed Without Drawings

35 U.S.C. 111(a)(2)(B) and 35 U.S.C. 111(b)(1)(B) each provide, in part, that an "application shall include . . . a drawing as prescribed by section 113 of this title" and 35 U.S.C. 111(a)(4) and 35 U.S.C. 111(b)(4) each provide, in part, that the "filing date . . . shall be the date on which . . . any required drawing are received in the Patent and Trademark Office." 35 U.S.C. 113 (first sentence) in turn provides that an "applicant shall furnish a drawing where necessary for the understanding of the subject matter sought to be patented.

Applications filed without drawings are initially inspected to determine whether a drawing is referred to in the specification, and if not, whether a drawing is necessary for the understanding of the invention. 35 U.S.C. 113 (first sentence).

It has been USPTO practice to treat an application that contains at least one process or method claim as an application for which a drawing is not necessary for an understanding of the invention under 35 U.S.C. 113 (first sentence). The same practice has been followed in composition applications.

* * *

A nonprovisional application having at least one claim, or a provisional application having at least some disclosure, directed to the subject matter discussed above for which a drawing is usually not considered essential for a filing date, not describing drawing figures in the specification, and filed without drawings will simply be processed for examination, so long as the application contains something that can be construed as a written description. A nonprovisional application having at least one claim, or a provisional application having at least some disclosure, directed to the subject matter discussed above for which a drawing is usually not considered essential for a filing date, describing drawing figure(s) in the specification, but filed without drawings will be treated as an application filed without all of the drawing figures referred to in the specification as discussed in MPEP § 601.01(g), so long as the application contains something that can be construed as a written description. In a situation in which the appropriate Technology Center (TC) determines that drawings are necessary under 35 U.S.C. 113 (first sentence) the filing date issue will be reconsidered by the

This application contains method claims, e.g., claims 36 - 63. Therefore, the application should have been treated as an application filed without all of the drawing figures referred to in the specification as discussed in MPEP §601.01(g).[5]

It appears that a "Notice of Omitted Items" should have been mailed instead of the "Notice of Incomplete Nonprovisional Application."

Therefore, the 29 March, 2002, "Notice of Incomplete Nonprovisional Application" hereby is vacated.

The application is accorded a filing date of 8 September, 2000.

The petition is granted in part, to the extent that the application will be accorded the filing date of 8 September, 2000, without the drawings containing Figures 1 - 3 as part of the original disclosure of the application.

The application file is being returned to the Office of Initial Patent Examination for further processing with a corrected filing date of 8 September, 2000, indicating in the Office records that "0" sheets of drawings were present on filing, and the mailing of a corrected filing receipt.

The Revocation and Power of Attorney filed 20 May, 2002, hereby is acknowledged and accepted.

USPTO.

* * *

[5] The commentary at MPEP §601.01 provides in pertinent part:

* * *

601.01(g) Applications Filed Without All Figures of Drawings

The Office of Initial Patent Examination (OIPE) reviews application papers to determine whether all of the figures of the drawings that are mentioned in the specification are present in the application. If the application is filed without all of the drawing figure(s) referred to in the specification, and the application contains something that can be construed as a written description, at least one drawing, if necessary under 35 U.S.C. 113 (first sentence), and, in a nonprovisional application, at least one claim, OIPE will mail a "Notice of Omitted Item(s)" indicating that the application papers so deposited have been accorded a filing date, but are lacking some of the figures of drawings described in the specification. The mailing of a "Notice of Omitted Item(s)" will permit the applicant to either: (1) promptly establish prior receipt in the USPTO of the drawing(s) at issue (generally by way of a date-stamped postcard receipt (MPEP § 503)); or (2) promptly submit the omitted drawing(s) in a nonprovisional application and accept the date of such submission as the application filing date. An applicant asserting that the drawing(s) was in fact deposited in the USPTO with the application papers must, within 2 months from the date of the "Notice of Omitted Item(s)," file a petition under 37 C.F.R. 1.53(e) with the petition fee set forth in 37 C.F.R. 1.17(h), along with evidence of such deposit (37 C.F.R. 1.181(f)). The petition fee will be refunded if it is determined that the drawing(s) was in fact received by the USPTO with the application papers deposited on filing.

* * *

Telephone inquiries concerning this matter may be directed to John J. Gillon, Jr., Senior Attorney, Office of Petitions, at (703)305-9199.

John J. Gillon, Jr.
Senior Attorney
Office of Petitions
Office of the Deputy Commissioner
for Patent Examination Policy

Beverly M. Flanagan
Supervisory Petitions Examiner
Office of Petitions
Office of the Deputy Commissioner
for Patent Examination Policy

UNITED STATES PATENT AND TRADEMARK OFFICE

Commissioner for Patents
United States Patent and Trademark Office
P.O. Box 1450
Alexandria, VA 22313-1450
www.uspto.gov

FISH & RICHARDSON PC
3300 DAIN RAUSCHER PLAZA
60 SOUTH SIXTH ST
MINNEAPOLIS MN 55402

COPY MAILED

JAN 0 4 2005

OFFICE OF PETITIONS

In re Application	:	
Lauffer, et al.	:	
Application No. 09/887,706	:	DECISION ON APPLICATION
Filed: September 8, 2000	:	FOR PATENT TERM ADJUSTMENT
Atty Docket No. MET/7 CON	:	

This is a decision on the "APPLICATION FOR PATENT TERM ADJUSTMENT UNDER 37 CFR 1.705(B)," filed October 6, 2004. Applicants request that the initial determination of patent term adjustment under 35 U.S.C. 154(b) be corrected from three hundred twelve (312) days to four hundred two (402) days.

The application for patent term adjustment is **GRANTED** to the extent indicate herein.

The Office has updated the PAIR screen to reflect that the correct Patent Term Adjustment (PTA) determination at the time of the mailing of the Notice of Allowance is **four hundred one (401) days**. A copy of the updated PAIR screen, showing the correct determination, is enclosed.

On July 9, 2004, the Office mailed the Determination of Patent Term Adjustment under 35 U.S.C. 154(b) in the above identified application. The Notice stated that the patent term adjustment (PTA) to date is three hundred twelve (312) days. On October 6, 2004, Applicants timely[1] submitted the instant application for patent term adjustment, asserting that the correct number of days of PTA at the time of the mailing of the Notice of Allowance is four hundred two (402) days.

Applicants assert entitlement to a patent term adjustment of four hundred two (402) days on the basis that the PTO improperly assessed Applicants a delay of sixty-one (61) days for responding to a Notice of Incomplete Nonprovisional Application mailed on March 29, 2002. Applicants assert that they timely filed a response within the three month period pursuant to 37 C.F.R. 1.704(b), as they filed a petition under 37 CFR 1.53(e) on June 6, 2002.[2] In addition, Applicants assert that the PTO improperly assessed Applicants a delay of thirty (30) days for filing an amendment after final office action pursuant to 37 C.F.R. 1.703(a)(3). Applicants state their after final amendment was timely filed on September 22, 2003, not November 20, 2003. Applicants also argue that they should not have been assessed delay of thirty-six (36) days for filing an amendment on May 27, 2003; rather they should have only been assessed delay of thirty-five (35) days. Finally, applicants point the Office's attention to the fact that they should have been assessed two (2) days of applicant delay for the filing of an RCE on March 11, 2004, where a Notice of Allowance was mailed on December 9, 2003.

Applicants state that the patent issuing from the application is not subject to a terminal disclaimer.

The Office initially determined a patent term adjustment of three hundred twelve (312) days based on an adjustment for PTO delay of four hundred thirty-nine (439) days pursuant to 35 U.S.C. 154(b)(1)(A)(i) and 37 C.F.R. § 1.703(a)(1), reduced by Applicants' delays of sixty one (61), thirty-six (36), and thirty (30) days pursuant to 35 U.S.C. 154(b)(2)(C)(ii) and 37 C.F.R. § 1.704(b). The adjustments of 61, 36, and 30 days are at issue.

---

[1] Applicants filed the application for patent term adjustment prior to the filing of the issue fee.

[2] A decision granting the petition was mailed on August 19, 2002.

The adjustment of 61 days has been found to be incorrect. A review of the application file reveals that a Notice of Incomplete Nonprovisional Application was mailed on March 29, 2002. Applicants timely filed a response to this Notice in the form of a petition under 37 CFR 1.53(e) on June 6, 2002. As this was timely pursuant to 37 CFR 1.704(b), no applicant delay should have been assessed.

The adjustment of 30 days has been found to be correct. A final Office action was mailed on July 21, 2003. Applicants have submitted a copy of a postcard receipt for the instant application, itemizing an amendment and bearing a USPTO date stamp of September 22, 2002. A postcard receipt which itemizes and properly identifies the items which are being filed serves as prima facie evidence of receipt in the USPTO of all the items listed thereon on the date stamped thereon by the USPTO.[3]

With respect to Applicants' delay of 36 days, Applicants cite to the Official Gazette Notice dated January 15, 2002, referencing mail delay associated with the dates October 13, 2001 through December 1, 2001. "Applicants respectfully submit that the timeframe for postal delays indicated by the Notice - three business days - is suggestive of the PTO's view of an acceptable postal service delay." Applicants' argument is not persuasive.[4]

Regarding the additional Applicant delay of 2 days, the Office thanks Applicants for their good faith and candor in bringing this matter to the attention of the Office.

In view thereof, the correct determination of patent term adjustment at the time of the mailing of the Notice of Allowance is **four hundred one (401) days** (439 days of PTO delay and 38 (36 +2) days of applicant delay).

The Office acknowledges submission of the $200.00 fee set forth in 37 CFR 1.18(e).

The application file is being forwarded to the Office of Patent Publication for processing into a patent.

---

[3] MPEP 503.

[4] See Changes to Implement Patent Term Adjustment Under Twenty-Year Patent Term, Comment 10, 1239 O.G. 14 (Oct. 3, 2000).

Telephone inquiries specific to this matter should be directed to Cliff Congo, Petitions Attorney, at (571)272-3207.

Kery A. Fries
for

Karin Ferriter
Senior Legal Advisor
Office of Patent Legal Administration
Office of Deputy Commissioner
for Patent Examination Policy

Enclosure: Copy of Revised PAIR Screen

UNITED STATES PATENT AND TRADEMARK OFFICE

Commissioner for Patents
United States Patent and Trademark Office
P.O. Box 1450
Alexandria, VA 22313-1450
www.uspto.gov

PHILIPS INTELLECTUAL PROPERTY & STANDARDS
P O BOX 3001
BRIARCLIFF MANOR, NY 10510

COPY MAILED

APR 0 7 2006

OFFICE OF PETITIONS

In re Application of	:
Mihaela Van Der Schaar et al	:
Application No. 09/887,747	: DECISION ON PETITION
Filed: June 21, 2001	: UNDER 37 CFR 1.78(a)(3)
Attorney Docket No. US 000168	:

This is a decision on the petition under 37 CFR 1.78(a)(3), filed February 6, 2006, to accept an unintentionally delayed claim under 35 U.S.C. § 120 for the benefit of priority to prior-filed nonprovisional Application No. 09/347,882, filed July 6, 1999.

The petition is **GRANTED**.

The present nonprovisional application was filed after November 29, 2000, and the claim herein for the benefit of priority to the above-noted prior-filed nonprovisional application is submitted after expiration of the period specified in 37 CFR 1.78(a)(2)(ii). Therefore, this is a proper petition under 37 CFR 1.78(a)(3).

A petition for acceptance of a claim for late priority under 37 CFR 1.78(a)(3) is only applicable to those applications filed on or after November 29, 2000. Further, the petition is appropriate only after the expiration of the period specified in 37 CFR 1.78(a)(2)(ii). In addition, the petition under 37 CFR 1.78(a)(3) must be accompanied by:

(1) the reference required by 35 U.S.C. § 120 and 37 CFR 1.78(a)(2)(i) of the prior-filed application, unless previously submitted;
(2) the surcharge set forth in § 1.17(t); and
(3) a statement that the entire delay between the date the claim was due under 37 CFR 1.78(a)(2)(ii) and the date the claim was filed was unintentional. The Commissioner may require additional information where there is a question whether the delay was unintentional.

The petition complies with the requirements for a grantable petition under 37 CFR 1.78(a)(3) in that (1) a reference to the above-noted, prior-filed nonprovisional application has been included in an amendment to the first sentence of the specification following the title, as provided by 37

CFR 1.78(a)(2)(iii); (2) the surcharge fee required by 37 CFR 1.17(t) has been submitted; and (3) the petition contains a proper statement of unintentional delay. Accordingly, having found that the instant petition for acceptance of an unintentionally delayed claim for the benefit of priority under 35 U.S.C. § 120 to the above-noted, prior-filed nonprovisional application satisfies the conditions of 37 CFR 1.78(a)(3), the petition is granted.

The granting of the petition to accept the delayed benefit claim to the prior-filed application under 37 CFR 1.78(a)(3) should not be construed as meaning that this application is entitled to the benefit of the prior-filed application. In order for this application to be entitled to the benefit of the prior-filed application, all other requirements under 35 U.S.C. § 120 and 37 CFR 1.78(a)(1) and (a)(2) must be met. Similarly, the fact that the corrected Filing Receipt accompanying this decision on petition includes the prior-filed application should not be construed as meaning that applicant is entitled to the claim for benefit of priority to the prior-filed application noted thereon. Accordingly, the examiner will, in due course, consider this benefit claim and determine whether this application is entitled to the benefit of the earlier filing date.

A corrected Filing Receipt, which includes the priority claim to the prior-filed nonprovisional application, accompanies this decision on petition.

Any inquiries concerning this decision may be directed to the undersigned at (571) 272-3218. All other inquiries concerning either the examination procedures or status of the application should be directed to the Technology Center.

This matter is being referred to Technology Center Art Unit 2621 for consideration by the examiner of applicant's entitlement to claim benefit of priority under 35 U.S.C. § 120 to the prior-filed nonprovisional application.

Frances Hicks
Petitions Examiner
Office of Petitions

ATTACHMENT: Corrected Filing Receipt

UNITED STATES PATENT AND TRADEMARK OFFICE

UNITED STATES DEPARTMENT OF COMMERCE
United States Patent and Trademark Office
Address: COMMISSIONER FOR PATENTS
P.O. Box 1450
Alexandria, Virginia 22313-1450
www.uspto.gov

APPL NO.	FILING OR 371 (c) DATE	ART UNIT	FIL FEE REC'D	ATTY.DOCKET NO	DRAWINGS	TOT CLMS	IND CLMS
09/887,747	06/21/2001	2621	1320	US 000168	11	45	5

CONFIRMATION NO. 7494

CORRECTED FILING RECEIPT

OC000000018481745

24737
PHILIPS INTELLECTUAL PROPERTY & STANDARDS
P.O. BOX 3001
BRIARCLIFF MANOR, NY 10510

Date Mailed: 04/07/2006

Receipt is acknowledged of this regular Patent Application. It will be considered in its order and you will be notified as to the results of the examination. Be sure to provide the U.S. APPLICATION NUMBER, FILING DATE, NAME OF APPLICANT, and TITLE OF INVENTION when inquiring about this application. Fees transmitted by check or draft are subject to collection. Please verify the accuracy of the data presented on this receipt. **If an error is noted on this Filing Receipt, please mail to the Commissioner for Patents P.O. Box 1450 Alexandria Va 22313-1450. Please provide a copy of this Filing Receipt with the changes noted thereon. If you received a "Notice to File Missing Parts" for this application, please submit any corrections to this Filing Receipt with your reply to the Notice. When the USPTO processes the reply to the Notice, the USPTO will generate another Filing Receipt incorporating the requested corrections (if appropriate).**

Applicant(s)

Mihaela Van Der Schaar, Ossining, NY;
Hayder Radha, East Lansing, MI;

Power of Attorney: The patent practitioners associated with Customer Number **24737**.

Domestic Priority data as claimed by applicant

This appln claims benefit of 60/217,827 07/12/2000
and is a CIP of 09/347,882 07/06/1999 PAT 6,263,022

Foreign Applications

If Required, Foreign Filing License Granted: 08/15/2001

The country code and number of your priority application, to be used for filing abroad under the Paris Convention, is US09/887,747

Projected Publication Date: Not Applicable

Non-Publication Request: No

Early Publication Request: No

Title

Method and apparatus for improved efficiency in transmission of fine granular scalable selective enhanced images

Preliminary Class

375

PROTECTING YOUR INVENTION OUTSIDE THE UNITED STATES

Since the rights granted by a U.S. patent extend only throughout the territory of the United States and have no effect in a foreign country, an inventor who wishes patent protection in another country must apply for a patent in a specific country or in regional patent offices. Applicants may wish to consider the filing of an international application under the Patent Cooperation Treaty (PCT). An international (PCT) application generally has the same effect as a regular national patent application in each PCT-member country. The PCT process **simplifies** the filing of patent applications on the same invention in member countries, but **does not result** in a grant of "an international patent" and does not eliminate the need of applicants to file additional documents and fees in countries where patent protection is desired.

Almost every country has its own patent law, and a person desiring a patent in a particular country must make an application for patent in that country in accordance with its particular laws. Since the laws of many countries differ in various respects from the patent law of the United States, applicants are advised to seek guidance from specific foreign countries to ensure that patent rights are not lost prematurely.

Applicants also are advised that in the case of inventions made in the United States, the Director of the USPTO must issue a license before applicants can apply for a patent in a foreign country. The filing of a U.S. patent application serves as a request for a foreign filing license. The application's filing receipt contains further information and guidance as to the status of applicant's license for foreign filing.

Applicants may wish to consult the USPTO booklet, "General Information Concerning Patents" (specifically, the section entitled "Treaties and Foreign Patents") for more information on timeframes and deadlines for filing foreign patent applications. The guide is available either by contacting the USPTO Contact Center at 800-786-9199, or it can be viewed on the USPTO website at http://www.uspto.gov/web/offices/pac/doc/general/index.html.

For information on preventing theft of your intellectual property (patents, trademarks and copyrights), you may wish to consult the U.S. Government website, http://www.stopfakes.gov. Part of a Department of Commerce initiative, this website includes self-help "toolkits" giving innovators guidance on how to protect intellectual property in specific countries such as China, Korea and Mexico. For questions regarding patent enforcement issues, applicants may call the U.S. Government hotline at 1-866-999-HALT (1-866-999-4158).

LICENSE FOR FOREIGN FILING UNDER
Title 35, United States Code, Section 184
Title 37, Code of Federal Regulations, 5.11 & 5.15

GRANTED

The applicant has been granted a license under 35 U.S.C. 184, if the phrase "IF REQUIRED, FOREIGN FILING LICENSE GRANTED" followed by a date appears on this form. Such licenses are issued in all applications where the conditions for issuance of a license have been met, regardless of whether or not a license may be required as set forth in 37 CFR 5.15. The scope and limitations of this license are set forth in 37 CFR 5.15(a) unless an earlier license has been issued under 37 CFR 5.15(b). The license is subject to revocation upon written notification. The date indicated is the effective date of the license, unless an earlier license of similar scope has been granted under 37 CFR 5.13 or 5.14.

This license is to be retained by the licensee and may be used at any time on or after the effective date thereof unless it is revoked. This license is automatically transferred to any related applications(s) filed under 37 CFR 1.53(d). This license is not retroactive.

The grant of a license does not in any way lessen the responsibility of a licensee for the security of the subject matter as imposed by any Government contract or the provisions of existing laws relating to espionage and the national security or the export of technical data. Licensees should apprise themselves of current regulations especially with respect to certain countries, of other agencies, particularly the Office of Defense Trade Controls, Department of State (with respect to Arms, Munitions and Implements of War (22 CFR 121-128)); the Bureau of Industry and Security, Department of Commerce (15 CFR parts 730-774); the Office of Foreign Assets Control, Department of Treasury (31 CFR Parts 500+) and the Department of Energy.

NOT GRANTED

No license under 35 U.S.C. 184 has been granted at this time, if the phrase "IF REQUIRED, FOREIGN FILING LICENSE GRANTED" DOES NOT appear on this form. Applicant may still petition for a license under 37 CFR 5.12, if a license is desired before the expiration of 6 months from the filing date of the application. If 6 months has lapsed from the filing date of this application and the licensee has not received any indication of a secrecy order under 35 U.S.C. 181, the licensee may foreign file the application pursuant to 37 CFR 5.15(b).

UNITED STATES PATENT AND TRADEMARK OFFICE

Commissioner for Patents
United States Patent and Trademark Office
P.O. Box 1450
Alexandria, VA 22313-1450
www.uspto.gov

PERKINS COIE
PATENT-SEA
P.O. BOX 1247
SEATTLE, WA 98111-1247

COPY MAILED

DEC 0 7 2005

OFFICE OF PETITIONS

In re Application of	:	
Whonchee Lee et al	:	
Application No. 09/887,767	:	ON PETITION
Filed: June 21, 2001	:	
Attorney Docket No. 108298515US2	:	

This is a decision on the petition under 37 CFR 1.313(c)(2), filed November 30, 2005, to withdraw the above-identified application from issue after payment of the issue fee.

The petition is **GRANTED**.

The above-identified application is withdrawn from issue for consideration of a submission under 37 CFR 1.114 (request for continued examination). See 37 CFR 1.313(c)(2).

Petitioner is advised that the issue fee paid on November 10, 2005 in the above-identified application cannot be refunded. If, however, the above-identified application is again allowed, petitioner may request that it be applied towards the issue fee required by the new Notice of Allowance.[1]

Telephone inquiries should be directed to Wan Laymon at (571) 272-3220.

This matter is being referred to Technology Center AU 3723 for processing of the request for continued examination under 37 CFR 1.114 and for consideration of the concurrently filed IDS.

Wan Laymon
Petitions Examiner
Office of Petitions

[1] The request to apply the issue fee to the new Notice may be satisfied by completing and returning the new Issue Fee Transmittal Form PTOL-85(b), which includes the following language thereon: "Commissioner for Patents is requested to apply the Issue Fee and Publication Fee (if any) or re-apply any previously paid issue fee to the application identified above." Petitioner is advised that, whether a fee is indicated as being due or not, the Issue Fee Transmittal Form **must** be completed and timely submitted to avoid abandonment. Note the language in bold text on the first page of the Notice of Allowance and Fee(s) Due (PTOL-85).

UNITED STATES PATENT AND TRADEMARK OFFICE

Commissioner for Patents
United States Patent and Trademark Office
P.O. Box 1450
Alexandria, VA 22313-1450
www.uspto.gov

LISA J. ULRICH
INTERNATIONAL BUSINESS MACHINES CORPORATION
ZIP 482
2070 ROUTE 52
HOPEWELL JUNCTION, NY 12533

COPY MAILED

DEC 0 1 2004

OFFICE OF PETITIONS

In re Patent No. 6,730,237	:
Michael R. Sievers et al.	: DECISION ON APPLICATION FOR
Issue Date: May 4, 2004	: PATENT TERM ADJUSTMENT
Application No. 09/887,791	: AND
Filed: June 22, 2001	: NOTICE OF INTENT TO ISSUE
Attorney Docket No.	: CERTIFICATE OF CORRECTION
FIS920000409US1	:

This is a decision on the "APPLICATION FOR PATENT TERM ADJUSTMENT," filed May 28, 2004. Patentees request that the determination of patent term adjustment under 35 U.S.C. 154(b) be corrected from thirteen (13) days to one hundred thirty-three (133) days.

The request for reconsideration of the patent term adjustment indicated on the patent is **GRANTED**.

The patent term adjustment indicated on the patent is to be corrected by issuance of a certificate of correction showing a revised Patent Term Adjustment of one hundred thirty-three **(133)** days.

On May 4, 2004, the above-identified application matured into U.S. Patent No. 6,730,237. The instant request for reconsideration considered filed May 28, 2004 was timely filed within 30 days of the date the patent issued. See § 1.705(d). The Patent issued with a revised Patent Term Adjustment of 13 days. Patentees state that the initial determination of patent term adjustment of 133 days should not have been reduced by 120 days for the submission of a "Miscellaneous Incoming Paper" after the Notice of Allowance, as the only paper filed after the mailing of the Notice of Allowance was a Comments on Statement of Reasons for Allowance.

Patentees' argument is well-taken. By Official Gazette Notice dated June 26, 2001, the Director has advised applicants and patentees that the filing after the mailing of a Notice of Allowance of a response to the examiner's reasons for allowance will not be considered a "failure to engage in reasonable efforts" to conclude processing or

examination of an application and will not result in reduction of a patent term adjustment pursuant to 37 CFR 1.704(c)(10) *Clarification of 37 CFR 1.704(c)(10) - Reduction of Patent Term Adjustment for Certain Types of Papers Filed After a Notice of Allowance*, 1247 OG 111 (June 26, 2001). A review of the application record reveals that the reduction of 120 days was based on the filing after allowance of a "Comments on Statement of Reasons for Allowance" filed November 24, 2003. Thus, it is concluded that the patent term adjustment should not have been reduced by 120 days.

Furthermore, there were no other bases for reduction of the patent term adjustment.

In view thereof, the patent term adjustment indicated on the patent should have been one hundred thirty-three **(133)** days.

The $200.00 fee set forth in 37 CFR 1.18(e) has been charged to Deposit Account No. 09-0458, as authorized. No additional fees are required.

The application file is being forwarded to the Certificates of Correction Branch for issuance of a certificate of correction in order to rectify this error. See 35 U.S.C. § 254 and 37 CFR § 1.322. The Office will issue a certificate of correction indicating that the term of the above-identified patent is extended or adjusted by one hundred thirty-three (133) days.

Telephone inquiries specific to this matter should be directed to Petitions Attorney, Patricia Faison-Ball at (571) 272-3212.

Kery A. Fries
per

Karin Ferriter
Senior Legal Advisor
Office of Patent Legal Administration
Office of Deputy Commissioner
for Patent Examination Policy

Enclosure: Copy of DRAFT Certificate of Correction

UNITED STATES PATENT AND TRADEMARK OFFICE

CERTIFICATE OF CORRECTION

PATENT : 6,730,237

DATED : May 4, 2004

INVENTOR(S) : Michael R. Sievers

It is certified that error appears in the above-identified patent and that said Letters Patent is hereby corrected as shown below:

On the cover page,

[*] Notice: Subject to any disclaimer, the term of this patent is extended or adjusted under 35 USC 154(b) by (13) days

Delete the phrase "by 13 days" and insert – by 133 days--

UNITED STATES PATENT AND TRADEMARK OFFICE

COMMISSIONER FOR PATENTS
UNITED STATES PATENT AND TRADEMARK OFFICE
P.O. BOX 1450
ALEXANDRIA, VA 22313-1450
WWW.USPTO.GOV

Paper No. 15

Glen E. Books, Esq.
Lowenstein Sandler, PC
65 Livingston Avenue
Roseland, NJ 07068

COPY MAILED
JUN 2 6 2003
OFFICE OF PETITIONS

In re Application of
Joseph A. Abys, et. al.
Application No. 09/887,827
Filed: June 22, 2001
Attorney Docket No. Abys 52-14-6-6

ON PETITION

This is a decision on the petition under 37 CFR 1.137(b), filed June 18, 2003, to revive the above-identified application.

The above-identified application became abandoned for failure to reply in a timely manner to the non-final Office action mailed July 17, 2002, which set a shortened statutory period for reply of three (3) months. No extensions of time under the provisions of 37 CFR 1.136(a) were obtained. Accordingly, the above-identified application became abandoned after midnight October 17, 2002.

The petition is **GRANTED**.

An extension of time under 37 CFR 1.136 must be filed prior to the expiration of the maximum extendable period for reply. See In re Application of S., 8 USPQ2d 1630, 1631 (Comm'r Pats. 1988). Accordingly, since the $930 extension of time submitted with the petition on June 18, 2003, was subsequent to the maximum extendable period for reply, this fee is unnecessary and will be credited to petitioner's deposit account.

The application is being forwarded to Technology Center 2800, for consideration of the amendment filed with the instant petition.

Telephone inquiries concerning this decision should be directed to Andrea Smith at (703) 308-6711.

Andrea Smith
Petitions Examiner
Office of Petitions
Office of the Deputy Commissioner
for Patent Examination Policy

UNITED STATES PATENT AND TRADEMARK OFFICE

Commissioner for Patents
United States Patent and Trademark Office
P.O. Box 1450
Alexandria, VA 22313-1450
www.uspto.gov

PATENT DEPARTMENT
LUTRON ELECTRONICS COMPANY, INC.
7200 SUTER ROAD
COOPERSBURG PA 18036-1299

COPY MAILED

JUL 11 2006

OFFICE OF PETITIONS

In re Application of	:	
Robert C. Newman, Jr. et al	:	
Application No. 09/887,848	:	ON PETITION
Filed: June 22, 2001	:	
Attorney Docket No. P99-16	:	

This is a decision on the petition under 37 CFR 1.137(b), filed November 28, 2005, to revive the above-identified application.

The petition is **DISMISSED**.

Any request for reconsideration of this decision must be submitted within TWO (2) MONTHS from the mail date of this decision. Extensions of time under 37 CFR 1.136(a) are permitted. The reconsideration request should include a cover letter entitled "Renewed Petition under 37 CFR 1.137(b)." This is **not** final agency action within the meaning of 5 U.S.C. § 704.

A grantable petition under 37 CFR 1.137(b)[1] must be accompanied by: (1) the required reply,[2] unless previously filed; (2) the petition fee as set forth in 37 CFR 1.17(m); (3) a statement that the entire delay in filing the required reply from the due date for the reply until the filing of a grantable petition pursuant to 37 CFR 1.137(b) was unintentional; and (4) any terminal disclaimer (and fee as set forth in 37 CFR 1.20(d)) required by 37 CFR 1.137(c). Where there is a question as to whether either the abandonment or the delay in filing a petition under 37 CFR 1.137 was unintentional, the Commissioner may require additional information. See MPEP 711.03(c)(III)(C) and (D). The instant petition lack(s) item(s) 1.

There is no evidence that the required issue fee has been received. If, the above-identified application is again allowed, petitioner may request that the issue fee be applied towards the

---

[1] As amended effective December 1, 1997. See Changes to Patent Practice and Procedure; Final Rule Notice, 62 Fed. Reg. 53131, 53194-95 (October 10, 1997), 1203 Off. Gaz. Pat. Office 63, 119-20 (October 21, 1997).

[2] In a nonprovisional application abandoned for failure to prosecute, the required reply may be met by the filing of a continuing application. In an application or patent, abandoned or lapsed for failure to pay the issue fee or any portion thereof, the required reply must be the payment of the issue fee or any outstanding balance thereof.

issue fee required by the new Notice of Allowance.[3]

Further correspondence with respect to this matter should be addressed as follows:

By mail: Mail Stop PETITIONS
Commissioner for Patents
Post Office Box 1450
Alexandria, VA 22313-1450

By hand: Customer Window located at:

Randolph Building
401 Dulany Street
Alexandria, VA 22314

By fax: (571) 273-8300
ATTN: Office of Petitions

Telephone inquiries concerning this decision should be directed to the undersigned at (571) 272-3208.

Karen Creasy

Karen Creasy
Petitions Examiner
Office of Petitions

[3]The request to apply the issue fee to the new Notice may be satisfied by completing and returning the new Issue Fee Transmittal Form PTOL-85(b), which incudes the following language thereon: "Commissioner for Patents is requested to apply the Issue Fee and Publication Fee (if any) or re-apply any previously paid issue fee to the application identified above."

UNITED STATES PATENT AND TRADEMARK OFFICE

Commissioner for Patents
United States Patent and Trademark Office
P.O. Box 1450
Alexandria, VA 22313-1450
www.uspto.gov

PATENT DEPARTMENT
LUTRON ELECTRONICS COMPANY, INC.
7200 SUTER ROAD
COOPERSBURG PA 18036-1299

COPY MAILED

JAN 0 9 2007

OFFICE OF PETITIONS

In re Application of	:	
Robert C. Newman Jr. et al	:	
Application No. 09/887,848	:	DECISION GRANTING PETITION
Filed: June 22, 2001	:	UNDER 37 CFR 1.137(b)
Attorney Docket No. P99-16	:	

This is a decision on the renewed petition under 37 CFR 1.137(b), filed August 18, 2006, to revive the above-identified application.

The petition is **GRANTED**.

The petition satisfies the conditions for revival pursuant to the provisions of 37 CFR 1.137(b) in that (1) the reply in the form of the issue fee and publication fee (2) the petition fee; and (3) the required statement of unintentional delay have been received. Accordingly, the reply to the Notice of Allowance of June 13, 2005, is accepted as having been unintentionally delayed.

Telephone inquiries concerning this decision should be directed to the undersigned at (571) 272-3208.

This matter is being referred to Technology Center AU 2821 to consider the Request For Continued Examination (RCE) filed November 28, 2005.

Karen Creasy

Karen Creasy
Petitions Examiner
Office of Petitions

UNITED STATES
PATENT AND
TRADEMARK OFFICE

UNDER SECRETARY OF COMMERCE FOR INTELLECTUAL PROPERTY
AND DIRECTOR OF THE UNITED STATES PATENT AND TRADEMARK OFFICE
WASHINGTON, D.C. 20231
WWW.USPTO.GOV

JUL 29 2002

Dahna S. Pasternak
ROBINS & PASTERNAK LLP
545 Middlefield Road, Suite 180
Menlo park, CA 94025

#8

In re Application of	:	
BANKIEWICZet al.	:	
Serial No. 09/887,854	:	PETITION DECISION
Filed: June 21, 2001	:	
Attorney Docket: 0800-0014.01	:	

This is in response to applicants' "Petition to Make Special Under MPEP 708.02, XII, filed July 08, 2002.

Based on the statements and evidence provided it is concluded the application meets the requirements for special status under MPEP § 708.02(XII).

Applicants' petition is **GRANTED**.

Should there be any questions regarding this decision, please contact Cecilia Tsang by mail addressed to Director, Technology Center 1600, Washington, D.C. 20231, or by telephone at (703) 308-0254 or by facsimile transmission at (703) 305-7230.

Cecilia Tsang for
John Doll
Director, Technology Center 1600

UNITED STATES PATENT AND TRADEMARK OFFICE

Commissioner for Patents
United States Patent and Trademark Office
Washington, D.C. 20231
www.uspto.gov
DIW 11-01

Paper No. 5

HOGAN & HARTSON L.L.P.
500 S. GRAND AVENUE
SUITE 1900
LOS ANGELES, CA 90071-2611

COPY MAILED

NOV 0 6 2001

OFFICE OF PETITIONS

In re Application of	:	
Natsuki Kushiyama	:	
Application No. 09/887,875	:	DECISION GRANTING PETITION
Filed: 22 June, 2001	:	
Attorney Docket No. 81790.0204	:	

This is a decision on the petition filed on 5 October, 2001, which is treated as a petition under 37 CFR 1.10(c) requesting that the above-identified application be accorded a filing date of 22 June, 2001, rather than the presently accorded filing date of 25 July, 2001.

Petitioner alleges that the application was deposited in Express Mail service on 22 June, 2001. Petitioners have provided a copy of an Express Mail customer receipt showing Label No. EL849945091US (the same Express Mail number found on the itemized transmittal sheet accompanying the original application papers located in the official file). Although the Express Mail customer receipt provided with the petition does not have the "date-in" completed, a review of the USPTO's USPS Express Mail Information Database reveals that the package bearing the above-referenced Label No. was accepted by the USPS on (i.e. given a "date-in" of) 22 June, 2001.

In view of the above, the petition is granted. The $130.00 petition fee will be refunded to counsel's deposit acocount, No. 50-1314.

The application is being forwarded to the Office of Initial Patent Examination for further processing **with a filing date of 22 June, 2001.**

Telephone inquiries specific to this matter should be directed to the undersigned at (703) 308-6918.

D Wood

Douglas I. Wood
Petitions Attorney
Office of Petitions
Office of the Deputy Commissioner
for Patent Examination Policy

UNITED STATES PATENT AND TRADEMARK OFFICE

Commissioner for Patents
United States Patent and Trademark Office
P.O. Box 1450
Alexandria, VA 22313-1450
www.uspto.gov
DIW Jan-07

GENENTECH, INC.
1 DNA WAY
SOUTH SAN FRANCISCO CA 94080

COPY MAILED

JAN 11 2007

OFFICE OF PETITIONS

In re Application of	:	
Ashkenazi et al.	:	DECISION ON PETITION TO
Application No. 09/887879	:	WITHDRAW HOLDING OF
Filed: 06/21/2001	:	ABANDONMENT
Attorney Docket No. P1110P1C1	:	

This is a decision on the petition filed on 17 October, 2006, to withdraw the holding of abandonment in the above-identified application.

The petition is **GRANTED**.

The application was held abandoned for failure to timely reply to the non-final Office action mailed on 23 December, 2005, which set a three (3)-month shortened statutory period for reply. Notice of Abandonment was mailed on 22 August, 2006.

Petitioners assert that the Notice mailed on 23 December, 2005, was never received.

In the absence of any irregularity in the mailing of the non-final Office action, there is a strong presumption that the non-final Office action was properly mailed to practitioner at the address of record. This presumption may be overcome by a showing that the non-final Office action was not in fact received. The showing required to establish the failure to receive an Office communication must include a statement from the practitioner stating that the Office communication was not received by the practitioner and attesting to the fact that a search of the file jacket and docket records indicates that the Office action was not received. A copy of the docket record where the non-received Office action would have been entered had it been received and docketed must be attached to and referenced in practitioner's statement. See "Withdrawing the Holding of Abandonment When

Office Actions Are Not Received" 1156 Official Gazette 53 (November 16, 1993) and M.P.E.P. § 711.03(c). The showing outlined above may not be sufficient if there are circumstances that point to a conclusion that the non-final Office action may have been lost after receipt rather than a conclusion that the non-final Office action was lost in the mail.

A review of the record indicates that the Office action was properly mailed to petitioners at the correspondence address of record at the time of mailing. Thus, there was no irregularity in mailing the Office action on the part of the United States Patent and Trademark Office.

In support of the petition, the petitioners' counsel, registered patent attorney Diane L. Marschang, asserts that counsel inspected the file wrapper and docketing records and found no evidence that the Office action was ever received. Additionally, a copy of the docket report where the Office action would have been docketed and entered had it been received has been provided and has been referenced in the practitioner's statement.

The petitioners have made a sufficient showing of nonreceipt of the Office action. Accordingly, the holding of abandonment is withdrawn.

The petition is **GRANTED.**

The application file is being referred to the Technology Center's Technical Support Staff for remailing of the Notices of Allowance and Allowability. The period for reply will be reset from the mailing date thereof.

Telephone inquiries concerning this matter may be directed to the undersigned at (571)272-3231.

D Wood

Douglas I. Wood
Senior Petitions Attorney
Office of Petitions

UNITED STATES PATENT AND TRADEMARK OFFICE

Commissioner for Patents
United States Patent and Trademark Office
P.O. Box 1450
Alexandria, VA 22313-1450
www.uspto.gov
DIW Jan-07

GENENTECH, INC.
1 DNA WAY
SOUTH SAN FRANCISCO CA 94080

COPY MAILED

JAN 26 2007

OFFICE OF PETITIONS

In re Application of	:	CORRECTED
Ashkenazi et al.	:	DECISION ON PETITION TO
Application No. 09/887879	:	WITHDRAW HOLDING OF
Filed: 06/21/2001	:	ABANDONMENT
Attorney Docket No. P1110P1C1	:	

This is a corrected decision on the petition filed on 17 October, 2006, to withdraw the holding of abandonment in the above-identified application.

The petition is **GRANTED**.

The application was held abandoned for failure to timely reply to the non-final Office action mailed on 23 December, 2005, which set a three (3)-month shortened statutory period for reply. Notice of Abandonment was mailed on 22 August, 2006.

Petitioners assert that the Notice mailed on 23 December, 2005, was never received.

In the absence of any irregularity in the mailing of the non-final Office action, there is a strong presumption that the non-final Office action was properly mailed to practitioner at the address of record. This presumption may be overcome by a showing that the non-final Office action was not in fact received. The showing required to establish the failure to receive an Office communication must include a statement from the practitioner stating that the Office communication was not received by the practitioner and attesting to the fact that a search of the file jacket and docket records indicates that the Office action was not received. A copy of the docket record where the non-received Office action would have been entered had it been received and docketed must be attached to and referenced in practitioner's statement. See "Withdrawing the Holding of Abandonment When

Office Actions Are Not Received" 1156 Official Gazette 53 (November 16, 1993) and M.P.E.P. § 711.03(c). The showing outlined above may not be sufficient if there are circumstances that point to a conclusion that the non-final Office action may have been lost after receipt rather than a conclusion that the non-final Office action was lost in the mail.

A review of the record indicates that the Office action was properly mailed to petitioners at the correspondence address of record at the time of mailing. Thus, there was no irregularity in mailing the Office action on the part of the United States Patent and Trademark Office.

In support of the petition, the petitioners' counsel, registered patent attorney Diane L. Marschang, asserts that counsel inspected the file wrapper and docketing records and found no evidence that the Office action was ever received. Additionally, a copy of the docket report where the Office action would have been docketed and entered had it been received has been provided and has been referenced in the practitioner's statement.

The petitioners have made a sufficient showing of nonreceipt of the Office action. Accordingly, the holding of abandonment is withdrawn.

The petition is **GRANTED.**

The application file is being referred to the Technology Center's Technical Support Staff for remailing of the non-final Office action. The period for reply will be reset from the mailing date thereof.

Telephone inquiries concerning this matter may be directed to the undersigned at (571)272-3231.

D Wood

Douglas I. Wood
Senior Petitions Attorney
Office of Petitions

UNITED STATES PATENT AND TRADEMARK OFFICE

Technology Center 1700.

Mailed: AUG 2 5 2004 rvk

Paper No. _____

In re application of:
Vincenzo Tomarchio et al
Serial No.: 09/887,887
Filed: June 22, 2001
For: FLUSHABLE HARD SURFACE CLEANING WET WIPE:

DECISION ON PETITION

This is a response to the PETITION TO WITHDRAW HOLDING OF ABANDONMENT under 37 C.F.R. 1.181, filed January 20, 2004. The petition requests that the abandonment, as set forth in the Notice of Abandonment of September 22, 2003, for failure to timely file a proper response to the Office letter dated February 10, 2003 be withdrawn. The petitioner asserts that applicants timely filed a proper response and a Petition for Extension of Time on July 30, 2003.

DECISION

The instant request is accepted as a petition under 37 C.F.R. 1.181 (no fee).

A review of the petitioner's evidence provided with the instant petition dated January 20, 2004 indicates that the applicants filed a response along with a Petition for Two-Month Extension of Time on July 30, 2003.

A review of the facts in this case shows that the Examiner mailed a non-final Office action on February 10, 2003, setting a 3-month shortened statutory period for reply. Thus a timely response, coupled with the two-month extension of time, would have had to be filed by July 10, 2003. Since applicants did not respond until July 30, 2003, the Reply dated July 30, 2003 is untimely. Accordingly, this application stands abandoned.

Applicants may file a new Petition to the Deputy Commissioner for Patent Examination Policy under 37 CFR 1.137(b) to revive the instant abandoned application based on unintentional delay.

The Petition is **DENIED.**

Jacqueline Stone, Director
Technology Center 1700
Chemical and Materials Engineering

THE PROCTER & GAMBLE COMPANY
INTELLECTUAL PROPERTY DIVISION
WINSTON HILL TECHNICAL CENTER – BOX 161
CINCINNATI, OH 45224

UNITED STATES PATENT AND TRADEMARK OFFICE

COMMISSIONER FOR PATENTS
UNITED STATES PATENT AND TRADEMARK OFFICE
P.O. BOX 1450
ALEXANDRIA, VA 22313-1450
www.uspto.gov

THE PROCTER & GAMBLE COMPANY
INTELLECTUAL PROPERTY DIVISION
WINTON HILL BUSINESS CENTER - BOX 161
6110 CENTER HILL AVENUE
CINCINNATI, OH 45224

COPY MAILED
SEP 29 2006
OFFICE OF PETITIONS

In re Application of	:	
Vincenzo Tomarchio, et. al.	:	
Application No. 09/887,887	:	ON PETITION
Filed: June 22, 2001	:	
Attorney Docket No. CM2385	:	
	:	

This is a decision on the petition under 37 CFR 1.137(b), filed by facsimile transmission on May 30, 2006, to revive the above-identified application.

The application became abandoned for failure to respond to the non-final Office action mailed February 10, 2003. A Notice of Abandonment was mailed on September 22, 2003.

Since $1,500 is needed for treatment of the instant petition, that fee has been charged to petitioner's deposit account, as authorized in the petition filed on January 20, 2004.

The petition satisfies the requirements of 37 CFR 1.137(b) in that petitioner has supplied (1) the reply in the form of an amendment; (2) the petition fee of $1,500; and (3) an adequate statement of unintentional delay. Therefore, the petition is **GRANTED**.

The application file is being referred to Technology Center Art Unit 1771, for review of the amendment filed on January 20, 2004.

Telephone inquiries concerning this decision should be directed to the undersigned at (571) 272-3226.

Andrea Smith
Petitions Examiner
Office of Petitions

UNITED STATES PATENT AND TRADEMARK OFFICE

Commissioner for Patents
United States Patent and Trademark Office
P.O. Box 1450
Alexandria, VA 22313-1450
www.uspto.gov

COPY MAILED

AUG 23 2007

OFFICE OF PETITIONS

THE PROCTER & GAMBLE COMPANY
INTELLECTUAL PROPERTY DIVISION - WEST BLDG.
WINTON HILL BUSINESS CENTER - BOX 412
6250 CENTER HILL AVENUE
CINCINNATI, OH 45224

In re Application of	:	
Vincenzo Tomarchio, et. al.	:	
Application No. 09/887,887	:	ON PETITION
Filed: June 22, 2001	:	
Attorney Docket No. CM2385	:	

This is a decision on the petition under 37 CFR 1.137(b), filed February 8, 2007, to revive the above-identified application.

The application became abandoned for failure to respond to the Notice of Non-Compliant Amendment mailed on November 17, 2006.

It is not apparent whether the statement of unintentional delay was signed by a person who would have been in a position of knowing that the entire delay in filing the required reply from the due date for the reply until the filing of a grantable petition pursuant to 37 CFR 1.137(b) was unintentional. Nevertheless, in accordance with 37 CFR 10.18, the statement is accepted as constituting a certification of unintentional delay. However, in the event that petitioner has no knowledge that the delay was unintentional, petitioner must make such an inquiry to ascertain that, in fact, the delay was unintentional. If petitioner discovers that the delay was intentional, petitioner must so notify the Office.

Also, there is no indication that the person signing the instant petition was ever given a power of attorney or authorization of agent to prosecute the above-identified application. In accordance with 37 CFR 1.34(a), the signature appearing on the petition shall constitute a representation to the United States Patent and Trademark Office that he/she is authorized to represent the particular party in whose behalf he/she acts.

Further, 37 CFR 1.137(b)(3) requires a statement that the entire delay in filing the required reply from the due date for the reply until the filing of a grantable petition pursuant to 37 CFR 1.137(b) was unintentional. Since the statement contained in the instant petition varies from the language required by 37 CFR 1.137(b)(3), the statement is being construed as the statement required by 37 CFR 1.137(b)(3) and petitioner must notify the Office if this is **not** a correct interpretation of the statement.

The petition satisfies the requirements of 37 CFR 1.137(b), in that, petitioner has supplied (1) the reply in the form of an amendment; (2) the petition fee of $1,500; and (3) an adequate statement of unintentional delay. Therefore, the petition is **GRANTED**.

If petitioner desires to receive future correspondence regarding this application, the appropriate power of attorney or authorization of agent must be submitted. A courtesy copy of this decision is being mailed to petitioner. Nevertheless, all future correspondence regarding this application file will be directed solely to the address of record until otherwise instructed.

The application file is being referred to Technology Center Art Unit 1771, for review of the amendment filed with the instant petition.

Telephone inquiries concerning this decision should be directed to the undersigned at (571) 272-3226.

Andrea Smith
Petitions Examiner
Office of Petitions

CC: Dinsmore & Shohl, LLP
1900 Chemed Center
255 East Fifth Street
Cincinnati, OH 45202

UNITED STATES PATENT AND TRADEMARK OFFICE

Commissioner for Patents
United States Patent and Trademark Office
P.O. Box 1450
Alexandria, VA 22313-1450
www.uspto.gov

Paper No. 8

Dominik J. Schmidt
P.O. Box 20541
Standford, CA 94309

COPY MAILED
MAY 2 1 2004
OFFICE OF PETITIONS

In re Application of	:	ON PETITION
Dominik J. Schmidt	:	
Application No. 09/887,908	:	
Filed: June 22, 2001	:	
Attorney Docket No. N/A	:	

This is a decision on the petition under 37 CFR 1.137(b), filed May 10, 2004, to revive the above-identified application.

The above-identified application became abandoned for failure to reply in a timely manner to the non-final Office action mailed September 26, 2003, which set a shortened statutory period for reply of three (3) months. No extensions of time under the provisions of 37 CFR 1.136(a) were obtained. Accordingly, the above-identified application became abandoned after midnight December 26, 2003.

In response to the non-final Office action, petitioner submitted with the instant petition $650 for the petition to revive fee, and an amendment. However, effective October 1, 2003, the small entity petition to revive fee was increased to $665. Therefore, the deficiency of $15 has been charged to petitioner's deposit account.

37 CFR 1.137(b)(3) requires a statement that the entire delay in filing the required reply from the due date for the reply until the filing of a grantable petition pursuant to 37 CFR 1.137(b) was unintentional. Since the statement contained in the instant petition varies from the language required by 37 CFR 1.137(b)(3), the statement is being construed as the statement required by 37 CFR 1.137(b)(3) and petitioner must notify the Office if this is **not** a correct interpretation of the statement.

It is not apparent whether the statement of unintentional delay was signed by a person who would have been in a position of knowing that the entire delay in filing the required reply from the due date for the reply until the filing of a grantable petition pursuant to 37 CFR 1.137(b) was unintentional. Nevertheless, in accordance with 37 CFR 10.18, the statement is accepted as constituting a certification of unintentional delay. However, in the event that petitioner has no knowledge that the delay was unintentional, petitioner must make such an inquiry to ascertain that, in fact, the delay was unintentional. If petitioner discovers that the delay was intentional, petitioner must so notify the Office.

Since there is no indication that the person signing the instant petition was ever given a power of attorney or authorization of agent to prosecute the above-identified application, in accordance with 37 CFR 1.34(a), the signature appearing on the petition shall constitute a representation to

the United States Patent and Trademark Office that he/she is authorized to represent the particular party in whose behalf he/she acts. However, if petitioner desires to receive future correspondence regarding this application, the appropriate power of attorney or authorization of agent must be submitted. A courtesy copy of this decision is being mailed to petitioner. Nevertheless, all future correspondence regarding this application file will be directed solely to the address of record until otherwise instructed.

Since the requirements for a grantable petition have been met, the petition is **GRANTED**.

The application file is being forwarded to Technology Center Art Unit 2636, for further review of the amendment filed with the instant petition.

Telephone inquiries concerning this decision should be directed to the undersigned at (703) 308-6711.

Andrea Smith
Petitions Examiner
Office of Petitions
Office of the Deputy Commissioner
for Patent Examination Policy

CC: Bao Tran
Tran & Associates
6768 Meadow Vista Court
San Jose, CA 95135

UNITED STATES PATENT AND TRADEMARK OFFICE

Commissioner for Patents
United States Patent and Trademark Office
P.O. Box 1450
Alexandria, VA 22313-1450
www.uspto.gov

Paper No. 11

BLAKELY, SOKOLOFF, TAYLOR & ZAFMAN
SEVENTH FLOOR
12400 WILSHIRE BOULEVARD
LOS ANGELES CA 90025-1030

COPY MAILED
AUG 3 0 2004
OFFICE OF PETITIONS

In re Application of	:
Siegfried Luft et al	:DECISION GRANTING PETITION
Application No. 09/887,957	:UNDER 37 CFR 1.137(b)
Filed: June 22, 2001	:
Attorney Docket No. 4906.P028	:

This is a decision on the petition, filed June 18, 2004, which is being treated as a petition under 37 CFR 1.137(b) to revive the instant nonprovisional application for failure to timely notify the U.S. Patent and Trademark (USPTO) of the filing of an application in a foreign country, or under a multinational treaty that requires publication of applications eighteen months after filing. *See* 37 CFR 1.137(f).

The petition is **GRANTED**.

Petitioner states that the instant nonprovisional application is the subject of an application filed in a foreign country on December 20, 2001. However, the USPTO was unintentionally not notified of this filing within 45 days subsequent to the filing of the subject application in a foreign country.

Petitioner contends that "the USPTO has misinterpreted the requirements of 35 U.S.C. § 122, causing the needless filing of the subject Petition, and respectfully requests a refund under 37 CFR § 1.26 for the fees under 37 CFR § 1.17(m) mistakenly required to be paid."

The petition fails to state with any specificity as to how the USPTO misinterpreted the rules.

However, petitioner's attention is directed to 35 U.S.C. 122(b)(2)(B) which states, in pertinent part:

(i) If an applicant makes a request upon filing, certifying that the invention disclosed in the application has not and will not be the subject of an application filed in another country, or under a multilateral international agreement, that requires publication of applications 18 months after filing, the application shall not be published as provided in paragraph (1).

(ii) **An applicant may rescind a request made under clause (i) at any time**.

(iii) An applicant who has made a request under clause (i) but who subsequently files, in a foreign country or under a multilateral international agreement specified in clause (i), an application directed to the invention disclosed in the application filed in the Patent and Trademark Office, shall notify the Director of such filing not later than 45 days after the date of the filing of such foreign or international application. **A failure of the applicant to provide such notice within the prescribed period shall result in the application being regarded as abandoned**, unless it is shown to the satisfaction of the Director that the delay in submitting the notice was unintentional.

(iv) If an applicant rescinds a request made under clause (i) **or** notifies the Director that an application was filed in a foreign country or under a multilateral international agreement specified in clause (i), the application shall be published in accordance with the provisions of paragraph (1) on or as soon as is practical after the date that is specified in clause (i).

The Congressional record explains that, if applicant has requested nonpublication because the application will not be filed "in a foreign country with a publication requirement, subparagraph (B)(iii) imposes a duty on the applicant to notify the Director of this fact. An unexcused failure to notify the Director will result in abandonment of the application." See 145 Cong. Rec. S14,718 (November 17, 1999).

A review of the file record discloses that this application was filed with a proper nonpublication request. As noted above, on December 20, 2001, applicant filed a counterpart international application relating to the subject matter of

the above-identified application. Notification of the filing of the counterpart international application as required by 35 U.S.C. 122(b)(2)(B)(iii) and 37 CFR 1.213(c) was provided at the time of filing of the instant petition.

The American Inventors Protection Act of 1999 required publication of certain patent applications filed on or after November 29, 2000, and allowed applicants to request nonpublication if the invention disclosed in the application had not been and would not be the subject of an application filed in another country, or pursuant to an international agreement that required publication of patent applications eighteen months after filing. The Act permitted applicants to rescind the nonpublication request at any time, but also required applicants to notify the USPTO if they had made a nonpublication request (with the certification that the invention disclosed in the application had not been and would not be "foreign filed," and then did foreign file). If an applicant requested nonpublication, and then did not provide notice of foreign filing no later than 45 days of the foreign filing, the statute provides that the application would be regarded as abandoned. An applicant who rescinded a nonpublication request after filing the U.S. application but before foreign filing the application is not understood to be required to also file a notice of foreign filing, since the rescinding of the nonpublication request prior to foreign filing would nullify the nonpublication request (if received in the USPTO prior to the date of foreign filing).

In view of the above and as the notification to the USPTO of the foreign filing on December 20, 2001 of the counterpart international application did not occur within 45 days of such filing, this application is regarded as abandoned as of midnight on February 3, 2002 pursuant to 35 U.S.C. § 122(b)(2)(B)(iii) and 37 CFR 1.213(c). Therefore, the appropriate relief from the abandoned status of this application is the filing of a petition under 37 CFR 1.137(b).

A petition to revive an application abandoned pursuant to 35 U.S.C. § 122(b)(2)(B)(iii) for failure to notify the USPTO of a foreign filing must be accompanied by:

(1) the reply which is met by the notification of such filing in a foreign country or under a multinational treaty;

(2) the petition fee as set forth in 37 CFR 1.17(m); and

(3) a statement that the entire delay in filing the required reply

from the due date of the reply until the filing of a grantable petition was unintentional.

The instant petition has been found to be in compliance with 37 CFR 1.137(b). Accordingly, the failure to timely notify the Office of a foreign or international filing within 45 days after the date of filing of such foreign or international application as provided by 35 U.S.C. § 122(b)(2)(B)(iii) and 37 CFR 1.213(c) is accepted as having been unintentionally delayed.

The rules and statutory provisions governing the operations of the U.S. Patent and Trademark Office require payment of a fee on filing each petition. 35 U.S.C. § 41(c)(7). Therefore, the $1,300 petition fee submitted is not refundable.

The previous Request and Certification under 35 U.S.C. § 122(b)(2)(B)(i) has been rescinded. A Notice Regarding Rescission of Nonpublication Request which sets forth the projected publication date of December 9, 2004 accompanies this decision on petition.

Any inquiries concerning this decision may be directed to the undersigned at (703) 305-8680.

This application is being forwarded to Technology Center Art Unit 2664 for examination in due course.

Frances Hicks

Frances Hicks
Petitions Examiner
Office of Petitions
Office of the Deputy Commissioner
for Patent Examination Policy

ATTACHMENT: Notice Regarding Rescission of Nonpublication Request

UNITED STATES PATENT AND TRADEMARK OFFICE

Commissioner for Patents
United States Patent and Trademark Office
Washington, D.C. 20231
www.uspto.gov

Paper No. 11

FISH & NEAVE
1251 AVENUE OF THE AMERICAS
50TH FLOOR
NEW YORK, NY 10020-1105

COPY MAILED

APR 1 6 2003

OFFICE OF PETITIONS

In re Application of	:	
Babak Rezvani et al	:	
Application No. 09/887,982	:	DECISION GRANTING PETITION
Filed: June 22, 2001	:	UNDER 37 CFR 1.137(f)
Attorney Docket No. CT/6	:	

This is a decision on the petition, filed April 8, 2003, to revive the instant nonprovisional application under the unintentional provisions of 37 CFR 1.137(f).

The petition is **GRANTED**.

Petitioner states that the instant nonprovisional application is the subject of an application filed in a foreign country on September 6, 2001. However, the U.S. Patent and Trademark Office was unintentionally not notified of this filing within 45 days subsequent to the filing of the subject application in a foreign country.

In view of the above, this application became abandoned pursuant to 35 U.S.C. § 122(b)(2)(B)(iii) and 37 CFR 1.213(c) for failure to timely notify the Office of the filing of an application in a foreign country, or under a multilateral international agreement, that requires publication of applications 18 months after filing.

A petition under 37 CFR 1.137(f) must be accompanied by:

(1) the reply which is met by the notification of such filing in a foreign country or under a multinational treaty;

(2) the petition fee as set forth in 37 CFR 1.17(m); and

(3) a statement that the entire delay in filing the required reply from the due date of the reply until the filing of a grantable petition was unintentional.

The instant petition has been found in compliance with 37 CFR 1.137(f). However, while the statement of unintentional delay does not comply with the rule, the statement presented will be construed as meaning that "the entire delay in filing the required reply [Notice to Rescind Previous Nonpublication Request Under 35 U.S.C. § 122(b)(2)(B)(ii)] until the filing of a grantable petition was unintentional." Accordingly, the failure to timely notify the Office of a foreign or international filing within 45 days as provided by 35 U.S.C. § 122(b)(2)(B)(iii) is accepted as having been unintentionally delayed.

The previous Request and Certification under 35 U.S.C. § 122(b)(2)(B)(i) has been rescinded. A corrected Filing Receipt which sets forth the projected publication date of July 24, 2003 accompanies this decision on petition.

Any inquiries concerning this decision may be directed to the undersigned at (703) 305-8680.

This application is being forwarded to Technology Center Art Unit 2155 for examination in due course.

Frances Hicks

Frances Hicks
Petitions Examiner
Office of Petitions
Office of the Deputy Commissioner
for Patent Examination Policy

ATTACHMENT: Corrected Filing Receipt

UNITED STATES PATENT AND TRADEMARK OFFICE

Commissioner for Patents
United States Patent and Trademark Office
P.O. Box 1450
Alexandria, VA 22313-1450
www.uspto.gov

DELPHI TECHNOLOGIES, INC.
M/C 480-410-202
P O BOX 5052
TROY, MI 48007

COPY MAILED

FEB 2 8 2005

OFFICE OF PETITIONS

In re Application of :
Roy Alan Visser :
Application No. 09/887,993 : ON PETITION
Filed: June 25, 2001 :
Attorney Docket No. DP-304278 :

This is a decision on the petition under 37 CFR 1.137(b), filed November 15, 2004, to revive the above-identified application.

The petition is **GRANTED.**

The above-identified application became abandoned for failure to reply in a timely manner to the non-final Office action mailed July 21, 2003, which set a shortened statutory period for reply of three (3) months. No extensions of time under the provisions of 37 CFR 1.136(a) were obtained. An office communication was mailed February 24, 2004 indicating that a reply filed on December 5, 2003 was not fully responsive to the prior Office Action. Since the above mentioned reply appeared to be *bona fide,* petitioner was given a time period of one (1) month or thirty (30) days from the mailing date of the notice, whichever is longer, within to supply the omission or correction in order to avoid abandonment. Accordingly, the application became abandoned on March 25, 2004.

Telephone inquiries concerning this decision should be directed to the undersigned at (571) 272-3229.

The application matter is being referred to Technology Center 3700, Art Unit 3753 for further processing.

Retta Williams

Retta Williams
Petitions Examiner
Office of Petitions
Office of the Deputy Commissioner
for Patent Examination Policy

UNITED STATES PATENT AND TRADEMARK OFFICE

COMMISSIONER FOR PATENTS
UNITED STATES PATENT AND TRADEMARK OFFICE
P.O. BOX 1450
ALEXANDRIA, VA 22313-1450
www.uspto.gov

Paper No. 4

Richard E. Kurtz
WOODCOCK WASHBURN LLP
One Liberty Place – 46th Floor
Philadelphia, PA 19103

MAILED
SEP 0 2 2004
Technology Center 2100

In re Application of:
Shawn Ray Isaacson, et al.
Application No. 09/888,001
Filed: June 21, 2001
For: METHOD AND SYSTEM FOR PROVIDING SECURE DIGITAL SOUND RECORDING

DECISION ON REQUEST TO WITHDRAW AS ATTORNEY OR AGENT

This is a decision on the Request To Withdraw from Representation filed August 16, 2004.

A grantable request to withdraw as attorney of record should indicate thereon the present mailing addresses of the attorney(s) who is/are withdrawing from the record and of the applicant. The request for withdrawal must be signed by every attorney seeking to withdraw or contain a clear indication that one attorney is signing on behalf of another/others. A request to withdraw will not be approved unless at least 30 (thirty) days would remain between the date of approval and the later of the expiration date of a time to file a response or the expiration date of the maximum time period which can be extended under 37 C.F.R. § 1. 136(a). The effective date of withdrawal being the date of decision and not the date of request. See M.P.E.P. § 402.06. 37 C.F.R. § 1.36 further requires that the applicant or patent owner be notified of the withdrawal of the attorney or agent.

The request filed August 16, 2004 meets all the requirements. Accordingly the request is **GRANTED**.

All future communications from the Office will be directed to the below-listed address until otherwise notified by applicant. This correspondence address is provided by the withdrawn attorney(s). Applicant is reminded of the obligation to promptly notify the Patent and Trademark Office (Office) of any change in correspondence address to ensure receipt of all communications from the Office.

James R. Matthews

for Vincent N. Trans
Special Program Examiner
Technology Center 2100
Computer Architecture, Software, and
Information Security
703-305-9750

cc: James Hagler
IOMEGA CORPORATION
Patent Department
10955 Vista Sorrento Parkway
San Diego, CA 92008

UNITED STATES PATENT AND TRADEMARK OFFICE

Commissioner for Patents
United States Patent and Trademark Office
P.O. Box 1450
Alexandria, VA 22313-1450
www.uspto.gov

Paper No. 10

PATRICK R. SCANLON
PIERCE ATWOOD
ONE MONUMENT SQUARE
PORTLAND, ME 04101

COPY MAILED
APR 2 8 2004
OFFICE OF PETITIONS

In re Application of	:	
King et al.	:	
Application No. 09/888,013	:	ON PETITION
Filed: June 22, 2001	:	
Attorney Docket No. 18938-2363001	:	

This is a decision on the petition under 37 C.F.R. § 1.137(b), filed April 19, 2004, to revive the above-identified application.

The petition is **granted.**

This application became abandoned for failure to timely reply within three months to the final Office action mailed February 26, 2003. No extensions of time under the provisions of 37 CFR 1.136(a) were obtained. Accordingly, this application became abandoned on May 27, 2003. A Notice of Abandonment was mailed on September 16, 2003.

Petitioner has met the requirements to revive the above-identified application pursuant to 37 CFR 1.137(b).

The file is now being forwarded to Technology Center 3600 for processing of the Request for Continued Examination under 37 CFR 1.114 filed with the instant petition.

Telephone inquiries should be directed to the undersigned at (703) 306-0482.

Liana Chase
Petitions Examiner
Office of Petitions
Office of the Deputy Commissioner
for Patent Examination Policy

UNITED STATES PATENT AND TRADEMARK OFFICE

COMMISSIONER FOR PATENTS
UNITED STATES PATENT AND TRADEMARK OFFICE
P.O. BOX 1450
ALEXANDRIA, VA 22313-1450
www.uspto.gov

Paper No. 9

CONLEY ROSE, P.C.
5700 GRANITE PARKWAY, SUITE 330
PLANO, TX 75024

COPY MAILED
MAR 1 2 2004
OFFICE OF PETITIONS

In re Application of
Tarbet, Kenneth H.
Application No. 09/888,031
Filed: June 25, 2001
Attorney Docket No. 4001-00800

ON PETITION

This is a decision on the petition under 37 C.F.R. § 1.137(b), filed March 1, 2004, to revive the above-identified application.

The petition is **granted.**

The above-identified application became abandoned for failure to reply in a timely manner to the Notice to File Corrected Application Papers (Notice) mailed August 24, 2001. The Notice set a period for reply of two (2) months from the mail date of the Notice. No extensions of time under the provisions of 37 CFR 1.136(a) were obtained. Accordingly, the above-identified application became abandoned on October 25, 2001. A Notice of Abandonment was mailed on February 2, 2004.

Petitioner has met the requirements to revive the above-identified application pursuant to 37 CFR 1.137(b).

The file is now being forwarded to the Office of Initial Patent Examination for further processing.

Telephone inquiries should be directed to the undersigned at (703) 306-0482.

Liana Chase
Petitions Examiner
Office of Petitions
Office of the Deputy Commissioner
for Patent Examination Policy

UNITED STATES PATENT AND TRADEMARK OFFICE

Commissioner for Patents
United States Patent and Trademark Office
P.O. Box 1450
Alexandria, VA 22313-1450
www.uspto.gov

Conley Rose, P.C.
5700 Granite Parkway, Suite 330
Plano TX 75024

COPY MAILED

APR 14 2005

OFFICE OF PETITIONS
ON PETITION

In re Application of :
Kenneth Tarbet :
Application No. 09/888,031 :
Filed: June 25, 2001 :
Attorney Docket No. 4001-00800 :

This is a decision on the petition under 182, filed January 19, 2005, which is being treated as a petition under 37 CFR 1.181, to accept the small entity fee for a petition under 37 CFR 1.137(b).

This application became abandoned for failure to reply timely to the Notice to File Corrected Application Papers mailed on August 24, 2001, which set a two-month extendable period to reply. Accordingly, this application became abandoned on October 25, 2001. A Notice of Abandonment was mailed on February 2, 2004. On March 1, 2004, petitioner filed a petition under 37 CFR 1.137(b) with the proper reply and a $1,330.00 petition fee. The petition was granted by the decision of March 12, 2004.

In the present petition, petitioner explains that petitioner established small entity status on June 25, 2001. Petitioner further explains that petitioner mistakenly paid the large entity fee of $1,330.00 for the petition under 37 CFR 1.137(b) filed on March 1, 2004.

Thereafter, petitioner requested that the Office credit the Deposit Account for the $665.00 overpayment of the petition fee. On October 20, 2004, the Office mistakenly refunded the <u>entire</u> petition fee of $1,330.00.

In the present petition, petitioner requests that the Office charge the Deposit Account for the small entity fee of $665.00 for the petition under 37 CFR 1.137(b) filed on March 1, 2004.

The petition is **GRANTED**.

Deposit Account No. 50-1515 will be charged the fee of $665.00 for the petition under 37 CFR 1.137(b) filed on March 1, 2004. The Office apologizes for the error. No fee is necessary for the filing of the present petition under 37 CFR 1.181.

Telephone inquiries concerning this matter may be directed to the undersigned at (571) 272-3211.

Christina Tartera Donnell

Christina Tartera Donnell
Senior Petitions Attorney
Office of Petitions

UNITED STATES PATENT AND TRADEMARK OFFICE

COMMISSIONER FOR PATENTS
UNITED STATES PATENT AND TRADEMARK OFFICE
WASHINGTON, D.C. 20231
www.uspto.gov

Paper No. 8

TIMOTHY A. CASSIDY
Dority & Manning
Attorneys at Law, P.A.
P.O. Box 1449
Greenville, SC 29602

COPY MAILED

MAR 0 6 2003

OFFICE OF PETITIONS

In re Application of
Grover Blackwell and Jeffrey Fuquay
Application No. 09/888,044
Filed: June 22, 2001
Attorney Docket Number: NHS-2
Title of Invention: REINFORCED WINDOW SHUTTER

DECISION ACCORDING STATUS UNDER 37 CFR 1.47(a)

This is in response to the petition under 37 CFR 1.47(a), filed February 26, 2002.

The petition is GRANTED.

Petitioner has shown that the non-signing inventor has refused to join in the filing of the above-identified application after having been presented with the application papers. Specifically, the declaration of facts attest a copy of the application was sent to non-signing inventor's last known address via Federal Express. The non-signing inventor's failure to respond to the application sufficiently establishes that he refuses to execute the application papers.

The above-identified application and papers have been reviewed and found in compliance with 37 CFR 1.47(a). This application is hereby accorded Rule 1.47(a) status.

As provided in Rule 1.47(c), this Office will forward notice of this application's filing to the non-signing inventor at the address given in the petition. Notice of the filing of this application will also be published in the Official Gazette.

This application is being forwarded to the Office of Initial Patent Examination for further processing.

Telephone inquiries related to this decision may be directed to the undersigned at (703) 306-0251.

Charlema R. Grant

Charlema R. Grant
Petitions Attorney
Office of Petitions

UNITED STATES PATENT AND TRADEMARK OFFICE

COMMISSIONER FOR PATENTS
UNITED STATES PATENT AND TRADEMARK OFFICE
WASHINGTON, D.C. 20231
www.uspto.gov

Jeffrey Fuquay
1406 F. Orange Grove Road
Charleston, SC 29407

COPY MAILED

MAR 0 6 2003

OFFICE OF PETITIONS

In re Application of
Grover Blackwell and Jeffrey Fuquay
Application No. 09/888,044
Filed: June 22, 2001
Attorney Docket Number: NHS-2
Title of Invention: REINFORCED WINDOW SHUTTER

LETTER

Dear Mr. Fuquay:

You Jeffrey Fuquay are named as a joint inventor in the above-identified United States patent application filed under the provisions of 35 U.S.C. 116 (United States Code) and 37 C.F.R. § 1.47(a), Rules of Practice in Patent Cases. Should a patent be granted on the application you will be designated therein as a joint inventor.

As a named inventor you are entitled to inspect any paper in the file wrapper of the application, order copies of all or any part thereof (at a prepaid cost as per 37 C.F.R. § 1.19) or make your position of record in the application. Alternatively, you may arrange to do any of the preceding through a registered patent attorney or agent presenting written authorization from you. If you care to join the application, counsel of record (see below) would presumably assist you. Joining in the application would entail the filing of an appropriate oath or declaration by you pursuant to 37 C.F.R. § 1.63.

Telephone inquiries regarding this communication should be directed to Petitions Attorney Charlema R. Grant at (703) 306-0251. Requests for information regarding your application should be directed to the File Information Unit at (703) 308-2733. Information regarding how to pay for and order a copy of the application, or a specific paper in the application, should be directed to Certification Division at (703) 308-9726 or 1-800-972-6382 (outside the Washington D.C. area).

Charlema R. Grant

Charlema R. Grant
Petitions Attorney
Office of Petitions

TIMOTHY A. CASSIDY
Dority & Manning
Attorneys at Law, P.A.
P.O. Box 1449
Greenville SC 29602

UNITED STATES PATENT AND TRADEMARK OFFICE

UNITED STATES DEPARTMENT OF COMMERCE
United States Patent and Trademark Office
Address: COMMISSIONER FOR PATENTS
P.O. Box 1450
Alexandria, Virginia 22313-1450
www.uspto.gov

ROBINS & PASTERNAK
1731 EMBARCADERO ROAD
SUITE 230
PALO ALTO, CA 94303

Mail Date: 04/21/2010

Applicant	: Kevin P. Francis	: DECISION ON REQUEST FOR
Patent Number	: 7056728	: RECALCULATION of PATENT
Issue Date	: 06/06/2006	: TERM ADJUSTMENT IN VIEW
Appliction No	: 09/888,049	: OF WYETH
Filed	: 06/21/2001	:
		:

The Patentee's Request for Recalculation is **DISMISSED.**

This Request is deemed ineligible for consideration for one or more of the following reasons:

(A). The patent for which PTA recalculation is requested is either a design or reissue application or is a reexamination proceeding;

(B). The patent for which PTA recalculation is requested resulted from a utility or plant application filed under 35 USC 111(a) before May 29, 2000 and no CPA filed in the application on/after May 29, 2000;

(C). The patent for which PTA recalculation is requested resulted from an international application in which the international filing date was before May 29, 2000 and no CPA filed in the application on/after May 29, 2000;

(D). The patent for which PTA recalculation is requested issued on/after March 2, 2010;

(E). The Request for Recalculation was filed more than 180 days after the grant date of the patent and the request was not filed within two months of a dismissal of a request for reconsideration of the of the patent term under 37 CFR 1.705(d);

(F). The Request for Recalculation is not solely limited to USPTO pre-Wyeth interpretation of 35 U.S.C. 154(b)(2)(A);

or

(G). A civil action was filed pursuant to 35 U.S.C. 154(b)(4)(A)concerning the same patent at issue in this request.

Patentee may file a reply to this decision dismissing the Request for Recalculation. Patentee must file such reply within one month or thirty days, whichever is longer, of the mail date of the decision dismissing the Request for Recalculation. No fee is required if patentee is asserting in the reply that the dismissal for ineligibility is improper.

Patentee should use document code PET.OP if electronically filing a reply to this dismissal. If the USPTO finds that the request was improperly deemed ineligible, the USPTO will mail applicant a recalculation determination.

Patentee should be aware that in order to preserve the right to review in the United States District Court for the District of Columbia of the USPTO patent term adjustment determination, patentee must ensure that he or she also take the steps required under 35 U.S.C. 154(b)(4)(A). Nothing in the request for recalculation should be construed as providing an alternative time frame for commencing a civil action under 35 U.S.C. 154 (b)(4)(A).

Any questions concerning this decision should be directed to the Office of Patent Legal Administration at 571-272-7702.

UNITED STATES PATENT AND TRADEMARK OFFICE

COMMISSIONER FOR PATENTS
UNITED STATES PATENT AND TRADEMARK OFFICE
WASHINGTON, D.C. 20231
www.uspto.gov

Paper No. 8

STOEL RIVES LLP
900 SW FIFTH AVENUE
SUITE 2600
PORTLAND OR 97204

COPY MAILED

MAY 23 2002

OFFICE OF PETITIONS

In re Application of
Hines
Application No. 09/888,061
Filed: June 21, 2001
Attorney Docket No. 10488/10:1
For: EVOLUTION DIAGRAMS FOR DEBUGGING DISTRIBUTED EMBEDDED SOFTWARE APPLICATIONS

ON PETITION

This is a decision on the petition filed January 18, 2002, requesting, in effect, that a "Notice Of Incomplete Reply" as pertaining to Figures 41A, 41B, 41C, and 41D , mailed November 30, 2001, in the above-identified application be withdrawn.

The application was filed on June 21, 2001. However, on August 21, 2001, the Office of Initial Patent Examination mailed a "Notice to File Missing Parts of Nonprovisional Application" stating that the application had been accorded a filing date of June 21, 2001, and requesting *inter alia*, that applicant submit substitute drawings with proper margins.

Petitioner submitted substitute drawings on October 19, 2001. The Office mailed a "Notice of Incomplete Reply" on November 30, 2001 advising applicant that Figures 41A, 41B, 41C and 41D described in the specification appeared to have been omitted and requesting substitute drawings in compliance with 37 CFR 1.84 because of the format/labeling of the figures on sheet 41 was not acceptable.

In response, the present petition was filed. Petitioner explains that Figures 41A, 41B, 41C, and 41D were not missing on June 21, 2001. Instead, the application included a sheet of drawings containing 4 figures labeled "Fig. 41" and that Fig. 41 is actually figures 41A, 41B, 41C, and 41D described in the specification. The petition is accompanied by a sheet of drawing showing the correct figure labels.

It is obvious from the petition and a search of the application file that no drawing was actually missing on June 21, 2001. Rather, the sheet of drawing containing Figs. 41A, 41B, 41C, and 41D was simply mislabeled as a result of appellant's filing error. However, the "Notice Of Incomplete Reply" mailed November 30, 2001, was correct in stating that Figure 41A, 41B, 41C, and 41D described in the specification appeared to have been omitted. Therefore, the "Notice" was properly mailed and will not be withdrawn.

The petition is dismissed.

Since the present petition was not necessitated by any error on the part of the Office, the $130.00 petition fee will not be refunded. The $200.00 extension of time fee will be refunded to deposit account no. 19-4455 because the Notice of Incomplete Reply, mailed November 30, 2001, set a new requirement for petitioner. A new requirement should have triggered a new period for reply.

A preliminary amendment adding the sheet of drawing containing Figures 41A, 41B, 41C, and

41D should be filed prior to first action on the merits.

The application is being returned to the Office Initial Patent Examination Division for further processing with a filing date of June 21, 2001, using the 50 substitute sheets of drawings filed on October 19, 2001.

Telephone inquiries should be directed to Petitions Attorney E. Shirene Willis at (703) 308-6712.

Beverly M. Flanagan
Supervisory Petitions Examiner
Office of Petitions
Office of the Deputy Commissioner
for Patent Examination Policy

UNITED STATES PATENT AND TRADEMARK OFFICE

COMMISSIONER FOR PATENTS
UNITED STATES PATENT AND TRADEMARK OFFICE
P.O. BOX 1450
ALEXANDRIA, VA 22313-1450
www.uspto.gov

MAIL

Paper No. 15

SEP - 3 2004

DIRECTOR OFFICE
TECHNOLOGY CENTER 2100

Michael R. Barre
c/o Blakely, Sokoloff, Taylor & Zafman, LLP
12400 Wilshire Blvd.
Seventh Floor
Los Angeles, CA 90025-1026

In re Application of: Hines Application No. 09/888,061 Attorney Docket No. 042390.P18902 Filed: June 21, 2001 For: EVOLUTION DIAGRAMS FOR DEBUGGING DISTRIBUTED APPLICATIONS	**DECISION ON PETITION TO WITHDRAW HOLDING OF ABANDONMENT UNDER 37 CFR §1.181**

This is a decision on the petition, filed June 29, 2004 requesting the Withdrawal of the Holding of Abandonment of the above-identified application. The petition is being considered under 37 CFR §1.181. This application was held abandoned for failure to respond to the Office action mailed December 4, 2003 (Paper No. 9). A Notice of Abandonment was mailed on June 15, 2004 (Paper No. 13).

Evidence in Support of Petition

In support of the petition, applicant's representative has provided a declaration that the Office action was not received. The petition further contains correspondence (Exh A); e-mail (Exh B) and a docket record copy (Exh C) "for the attorney to whom the application is assigned."

The petition states Intel Corporation "acquired the application as part of a broader agreement on November 7, 2003. The previous power of attorney was revoked and a new power of attorney was provided to the U.S. Patent and Trademark Office on March 5, 2004."

Issues involving Nonreceipt of Correspondence

The proof necessary set forth in MPEP §711.03(c). The showing required to establish nonreceipt of an Office action includes the following:

1) a statement from the practitioner that the Office action was not received,
2) a statement from the practitioner that the file jacket and docket records were searched,
3) a copy of the docket record at the address of record, and
4) a reference to the docket record in the practitioner's statement.

The petition fails to fully comply with the requirements set forth above. The evidence submitted fails because it relates to evidence regarding matters between law firms and the assignee. The statements made appear to clearly indicate the firm of record (Stoel Rives, LLP) received the Office action at the time the Office action was mailed in December 2003. The current practitioner is merely stating his firm never received the Office action from either the

firm of Stoel Rives, LLP or from the assignee, Intel Corporation. Therefore, the evidence submitted to date has not overcome the presumption of receipt.

In fact, there is clear evidence from the practitioner's statements that the Office has properly handled the mailing of communications to the appropriate address. According to the MPEP § 403, "37 CFR 1.33 states that when an attorney has been duly appointed to prosecute an application correspondence will be held with the attorney unless some other correspondence address has been given." Until the assignee's filing dated March 8, 2004 and accepted on April 5, 2004, all correspondence was properly directed to the firm of Stoel Rives, LLP.

The petition is **DISMISSED**. The petitioner may wish to consider filing a petition to revive under 37 CFR § 1.137.

Finally, a review of the file application reveals the applicant failed to comply with the direction given in the earlier petition decision dated May 23, 2002. Specifically, the applicant was advised to file a preliminary amendment adding a sheet of drawings containing figures labeled 41A-D. There is no record of such a filing and the sheet submitted with the petition under 37 CFR § 1.182 does not fulfill that requirement.

Josie A. Ballato
Special Programs Examiner
Technology Center 2100
Computer Architecture, Software, and Information Security

UNITED STATES PATENT AND TRADEMARK OFFICE

Commissioner for Patents
United States Patent and Trademark Office
P.O. Box 1450
Alexandria, VA 22313-1450
www.uspto.gov

Paper No. 22

BLAKELY SOKOLOFF TAYLOR & ZAFMAN LLP
12400 WILSHIRE BOULEVARD, SEVENTH FLOOR
LOS ANGELES, CA 90025

COPY MAILED

DEC 10 2004

OFFICE OF PETITIONS

In re Application of	:	
Kenneth J. Hines	:	
Application No. 09/888,061	:	DECISION GRANTING PETITION
Filed: June 21, 2001	:	UNDER 37 CFR 1.137(b)
Attorney Docket No. 042390.P18902	:	

This is a decision on the petition under 37 CFR 1.137(b), filed October 1, 2004, to revive the above-identified application.

The petition is **GRANTED**.

The above-identified application became abandoned for failure to reply in a timely manner to the nonfinal Office action mailed December 4, 2003, which set a shortened statutory period for reply of three (3) months. No extensions of time under the provisions of 37 CFR 1.136(a) were obtained. Accordingly, the above-identified application became abandoned on March 5, 2004. A Notice of Abandonment was mailed on June 15, 2004.

The petition satisfies the conditions for revival pursuant to the provisions of 37 CFR 1.137(b) in that (1) the reply; (2) the petition fee; and (3) the required statement of unintentional delay have been received. Accordingly, the reply to the nonfinal Office action of December 4, 2003 is accepted as having been unintentionally delayed.

Telephone inquiries concerning this decision should be directed to the undersigned at (571) 272-3218.

The application file is being forwarded to Technology Center AU 2122 for further action as the nature of the case requires.

Frances Hicks

Frances Hicks
Petitions Examiner
Office of Petitions
Office of the Deputy Commissioner
for Patent Examination Policy

UNITED STATES PATENT AND TRADEMARK OFFICE

Commissioner for Patents
United States Patent and Trademark Office
P.O. Box 1450
Alexandria, VA 22313-1450
www.uspto.gov

DARBY & DARBY PC
P O BOX 5257
NEW YORK, NY 10150-5257

COPY MAILED

MAR 15 2006

OFFICE OF PETITIONS

In re Application of :
Kijuro Kobayashi et al :
Application No. 09/888,073 : DECISION GRANTING PETITION
Filed: June 22, 2001 : UNDER 37 CFR 1.313(c)(2)
Attorney Docket No. M2057-74 :

This is a decision on the petition under 37 CFR 1.313(c)(2) to withdraw the above-identified application from issue after payment of the issue fee.

The petition is **GRANTED**.

The above-identified application is withdrawn from issue for consideration of a submission under 37 CFR 1.114 (request for continued examination). See 37 CFR 1.313(c)(2).

Petitioner is advised that the issue fee paid on November 15, 2005 in the above-identified application cannot be refunded. If, however, the above-identified application is again allowed, petitioner may request that it be applied towards the issue fee required by the new Notice of Allowance.[1]

Telephone inquiries should be directed to the undersigned at (571) 272-3218.

This matter is being referred to Technology Center AU 3725 for processing of the request for continued examination under 37 CFR 1.114 and for consideration of the Information Disclosure Statement.

Frances Hicks
Petitions Examiner
Office of Petitions

C:\Documents and Settings\FHicks\My Documents\470\Mar9\888073.wpd

---

[1] *The request to apply the issue fee to the new Notice may be satisfied by completing and returning the new Part B – Fee(s) Transmittal Form (along with any balance due at the time of submission), which includes the following language thereon: "The Director of the USPTO is requested to apply the Issue Fee and Publication Fee (if any) or to re-apply any previously paid issue fee in the application identified above. Petitioner is advised that, whether a fee is indicated as being due or not, the Issue Fee Transmittal Form* ***must*** *be completed and timely submitted to avoid abandonment. Note the language in bold text on the first page of the Notice of Allowance and Fee(s) Due (PTOL-85).*

UNITED STATES PATENT AND TRADEMARK OFFICE

COMMISSIONER FOR PATENTS
UNITED STATES PATENT AND TRADEMARK OFFICE
WASHINGTON, D.C. 20231
www.uspto.gov

PETER J. DEVLIN, ESQ.
FISH & RICHARDSON, P.C.
225 FRANKLIN STREET
BOSTON, MA 02110-2804

Paper No. 4
COPY MAILED

JAN 15 2002

OFFICE OF PETITIONS

In re Application of:
Judge, et al.
Application No. 09/888,093
Filed: June 21, 2001
Attorney Docket No. 06837-112001

DECISION DISMISSING PETITION

This is a decision on the petition filed October 1, 2001, requesting that the above-identified application be accorded a filing date of June 22, 2001, rather than the presently accorded filing date of June 21, 2001.

A review of the original application papers shows that the papers were stamped in the Patent and Trademark Office (PTO) with a June 21, 2001 Office generated barcode. Therefore, the filing date of the application is the date shown on the Office generated barcode or "Office Date" stamp. See MPEP 505.

Petitioners have two options to obtain a June 22, 2001 filing date. First, petitioners could file their copy of the return postcard. If the return postcard shows a date stamp of June 22, 2001, the application will be accorded a June 22, 2001 filing date. A date stamped return postcard constitutes *prima facie* evidence that the application was filed on the date that is stamped on the postcard. MPEP 503. Second, petitioners could file a petition under 37 CFR 1.10(c) because petitioners filed the application via Express Mail. If the "date-in" shown on the Express Mail label EL298423956US is June 22, 2001, petitioners will establish that the filing date accorded to this application should be June 22, 2001.

Because the present petition does not include persuasive documentary evidence to show the application was filed on June 22, 2001, the petition must be **dismissed**.

No petition fee is required and none has been charged.

The application is being returned to the Office of Initial Patent Examination for further processing.

Telephone inquiries pertaining to this matter may be directed to Petitions Attorney E. Shirene Willis at (703) 308-6712.

Beverly M. Flanagan
Supervisory Petitions Examiner
Office of Petitions
Office of the Deputy Commissioner
for Patent Examination Policy

UNITED STATES PATENT AND TRADEMARK OFFICE

Commissioner for Patents
United States Patent and Trademark Office
P.O. Box 1450
Alexandria, VA 22313-1450
www.uspto.gov

Paper No. 16

FISH & RICHARDSON PC
225 FRANKLIN ST
BOSTON MA 02110

COPY MAILED
SEP 0 2 2004
OFFICE OF PETITIONS

In re Application of Choi, et al. Application No. 09/888,114 Filed: June 22, 2001 Attorney Docket No. IMMR032/03US	DECISION ON PETITION

This is a decision on the petition under 37 CFR 1.78(a)(3), filed August 22, 2003, to accept an unintentionally delayed claim under 35 U.S.C. 120 for the benefit of priority to nonprovisional application 08/092,974.

The petition is **DISMISSED**.

Any request for reconsideration of this decision must be submitted within TWO (2) MONTHS from the mail date of this decision. Extensions of time under 37 CFR 1.136(a) are permitted. The reconsideration request should include a cover letter entitled "Renewed Petition under 37 CFR 1.137(a)." As the petition fee has already been paid, there is no further fee for a renewed petition.

A petition for acceptance of a claim for late priority under 37 CFR 1.78(a)(3) is only applicable to those applications filed on or after November 29, 2000. Further, the petition is appropriate only after the expiration of the period specified in 37 CFR 1.78(a)(2)(ii). In addition, the petition under 37 CFR 1.78(a)(3) must be accompanied by:

> (1) the reference required by 35 U.S.C. § 120 and 37 CFR 1.78(a)(2)(i) of the prior-filed application(s), unless previously submitted;[1]

---

[1] Any nonprovisional application or international application designating the United States of America claiming the benefit of one or more prior-filed copending applications or international applications designating the United States of America must contain or be amended to contain a reference

(2) the surcharge set forth in § 1.17(t); and

(3) a statement that the entire delay between the date the claim was due under 37 CFR 1.78(a)(2)(ii) and the date the claim was filed was unintentional. The Commissioner may require additional information where there is a question whether the delay was unintentional.

Petitioner has not included the reference required by 35 U.S.C. § 120 and 37 CFR 1.78(a)(2)(i) of the prior-filed application(s). Petitioner states that the reference was included in a previously filed preliminary amendment, filed on January 9, 2002. However, a review of the application file does not reveal the presence of this amendment. On renewed petition, petitioner must submit the required reference of the prior-filed application(s).

Further correspondence with respect to this matter should be addressed as follows:

By mail: Mail Stop Petitions
Commissioner for Patents
P.O. Box 1450
Alexandria VA 22313-1450

By FAX: (703) 872-9306
Attn: Office of Petitions

Telephone inquiries concerning this matter should be directed to Petitions Attorney Cliff Congo at (703) 305-0272.

Charles Pearson
Director
Office of Petitions

(amendment to the first line of the specification following the title or in an application data sheet (ADS) to each such prior-filed application, identifying it by application number (consisting of the series code and serial number) or international application number and international filing date filing date and indicating the relationship of the applications. Cross references to other related applications may be made when appropriate (*see* § 1.14).

UNITED STATES PATENT AND TRADEMARK OFFICE

Commissioner for Patents
United States Patent and Trademark Office
P.O. Box 1450
Alexandria, VA 22313-1450
www.uspto.gov

FISH & RICHARDSON PC
255 FRANKLIN ST
BOSTON MA 02110

COPY MAILED

MAY 17 2005

OFFICE OF PETITIONS

In re Application of
Choi, et al.
Application No. 09/888,114
Filed: June 22, 2001
Attorney Docket No. IMMR032/03US

DECISION ON PETITION

This is a decision on the renewed petition under 37 CFR 1.78(a)(3), filed November 4, 2004, which is also being treated as a petition under 37 CFR 1.78(a)(6), to accept an unintentionally delayed claim under 35 U.S.C. 120 and 365(c) for the benefit of nonprovisional applications 09/829,405 and 09/598,089, and international application PCT/US01/19625, and to accept an unintentionally delayed claim for priority under 35 U.S.C. 119(e) for the benefit of provisional application 60/283,976.

The petition is **DISMISSED**.

A petition for acceptance of a claim for late priority under 37 CFR 1.78(a)(3) and 37 CFR 1.78(a)(6) is only applicable to those applications filed on or after November 29, 2000. Further, the petition is appropriate only after the expiration of the period specified in 37 CFR 1.78(a)(2)(ii) and 1.78(a)(5)(ii). In addition, the petition under 37 CFR 1.78(a)(3) and 1.78(a)(6) must be accompanied by:

> (1) the reference required by 35 U.S.C. §§ 120 and 119(e) and CFR §§ 1.78(a)(2)(i) and 1.78(a)(5)(i) of the prior-filed application(s), unless

previously submitted;[1]

(2) the surcharge set forth in § 1.17(t); and

(3) a statement that the entire delay between the date the claim was due under 37 CFR §§ 1.78(a)(2)(ii) and 1.78(a)(5)(ii) and the date the claim was filed was unintentional. The Commissioner may require additional information where there is a question whether the delay was unintentional.

A reference to add the above-noted , prior-filed applications on page one following the first sentence of the specification has been included in a concurrently filed amendment. However, the amendment is not acceptable as drafted since it improperly incorporates by reference the prior-filed applications. Petitioner's attention is directed to Dart Industries v. Banner, 636 F.2d 684, 207 USPQ 273 (C.A.D.C. 1980), where the court drew a distinction between a permissible 35 U.S.C. 120 statement and the impermissible introduction of new matter by way of incorporation by reference in a 35 U.S.C. 120 statement. The court specifically stated:

> Section 120 merely provides a mechanism whereby an application becomes entitled to benefit of the filing date of an earlier application disclosing the same subject matter. Common subject matter must be disclosed, in both applications, either specifically or by an express incorporation-by-reference of prior disclosed subject matter. Nothing in section 120 itself operates to carry forward any disclosure from an earlier application. In re deSeversky, supra at 674, 177 USPQ at 146-147. Section 120 contains no magical disclosure-augmenting powers able to pierce new matter barriers. It cannot, therefore, "limit" the absolute and express prohibition against new matter contained in section 251.

In order for the incorporation by reference statement to be effective as a proper safeguard against the omission of a portion of a prior application, the incorporation by reference statement must be included in the specification-as-filed, or in an amendment specifically referred to in an oath or declaration executing the application. See

---

[1] Any nonprovisional application or international application designating the United States of America claiming the benefit of one or more prior-filed copending applications or international applications designating the United States of America must contain or be amended to contain a reference (amendment to the first line of the specification following the title or in an application data sheet (ADS) to each such prior-filed application, identifying it by application number (consisting of the series code and serial number) or international application number and international filing date filing date and indicating the relationship of the applications. Cross references to other related applications may be made when appropriate (*see* § 1.14).

In re deSeversky, supra. See also MPEP 201.06(c).

Accordingly, before the instant petition can be granted, a substitute amendment[2] deleting the incorporation by reference statement, along with a renewed petition under 37 CFR 1.78(a)(3) is required.

Further correspondence with respect to this matter should be addressed as follows:

By mail: Mail Stop Petitions
Commissioner for Patents
P.O. Box 1450
Alexandria VA 22313-1450

By FAX: (703) 872-9306
Attn: Office of Petitions

Telephone inquiries concerning this matter should be directed to Petitions Attorney Cliff Congo at (571)272-3207.

Charles Pearson
Director
Office of Petitions

[2] See 37 CFR 1.121

UNITED STATES PATENT AND TRADEMARK OFFICE

Commissioner for Patents
United States Patent and Trademark Office
P.O. Box 1450
Alexandria, VA 22313-1450
www.uspto.gov

FISH & RICHARDSON PC
255 FRANKLIN ST
BOSTON MA 02110

COPY MAILED

DEC 27 2005

OFFICE OF PETITIONS

In re Application of
Choi, et al.
Application No. 09/888,114
Filed: June 22, 2001
Attorney Docket No. IMMR032/03US

DECISION ON PETITION

This is a decision on the renewed petition under 37 CFR 1.78(a), filed July 19, 2005, which is being treated as a petition under 37 CFR 1.78(a)(3) and 37 CFR 1.78(a)(6), to accept an unintentionally delayed claim under 35 U.S.C. 120 and 365(c) for the benefit of nonprovisional applications 09/829,405 and 09/598,089, and international application PCT/US01/19625, and to accept an unintentionally delayed claim for priority under 35 U.S.C. 119(e) for the benefit of provisional application 60/283,976.

The petition is **GRANTED**.

A petition for acceptance of a claim for late priority under 37 CFR 1.78(a)(3) and 37 CFR 1.78(a)(6) is only applicable to those applications filed on or after November 29, 2000. Further, the petition is appropriate only after the expiration of the period specified in 37 CFR 1.78(a)(2)(ii) and 1.78(a)(5)(ii). In addition, the petition under 37 CFR 1.78(a)(3) and 1.78(a)(6) must be accompanied by:

> (1) the reference required by 35 U.S.C. §§ 120 and 119(e) and CFR §§ 1.78(a)(2)(i) and 1.78(a)(5)(i) of the prior-filed application(s), unless previously submitted;[1]
>
> (2) the surcharge set forth in § 1.17(t); and
>
> (3) a statement that the entire delay between the date the claim was due under 37 CFR §§ 1.78(a)(2)(ii) and 1.78(a)(5)(ii) and the date the claim was filed was unintentional. The Commissioner may require additional information where there is a question whether the delay was unintentional.

The instant application was filed on June 22, 2001, and was pending at the time of filing of the instant petition. Reference to the prior filed applications has been included in an amendment to the first sentence of the specification following the title, as required by 37 CFR 1.78(a)(2)(iii) and 37 CFR 1.78(a)(5)(iii).

Accordingly, having found that the instant petition for acceptance of an unintentionally delayed claim for the benefit of priority under 35 U.S.C. §§120 and 119(e) to the prior-filed applications satisfies the conditions of 37 CFR 1.78(a)(3) and 37 CFR 1.78(a)(6), the petition is granted.

A corrected Filing Receipt, which includes the priority claim to the prior-filed applications, and the foreign priority claim, accompanies this decision on petition.

Receipt of the $1,300 petition fee, submitted with the petition filed September 2, 2003, is acknowledged.

The granting of the petition to accept the delayed benefit claim

---

[1] Any nonprovisional application or international application designating the United States of America claiming the benefit of one or more prior-filed copending applications or international applications designating the United States of America must contain or be amended to contain a reference (amendment to the first line of the specification following the title or in an application data sheet (ADS) to each such prior-filed application, identifying it by application number (consisting of the series code and serial number) or international application number and international filing date filing date and indicating the relationship of the applications. Cross references to other related applications may be made when appropriate (*see* § 1.14).

to the prior-filed application(s) under 37 CFR 1.78(a)(3) and 37 CFR 1.78(a)(6) should not be construed as meaning that the instant application is entitled to the benefit of the prior-filed application(s). In order for the instant application to be entitled to the benefit of the prior-filed application(s), all other requirements under 35 U.S.C. §§ 119(e) and 120 and 37 CFR 1.78 must be met. Accordingly, the examiner will, in due course, consider this benefit claims and determine whether the instant application is entitled to the benefit of the earlier filing date.

This application is being forwarded to Group Art Unit 1648 for examination.

Telephone inquiries concerning this matter should be directed to Petitions Attorney Cliff Congo at (571)272-3207.

Frances Hicks

Frances Hicks
Petitions Examiner
Office of Petitions

Enc: Corrected Filing Receipt (3 pages)

UNITED STATES PATENT AND TRADEMARK OFFICE

Commissioner for Patents
United States Patent and Trademark Office
P.O. Box 1450
Alexandria, VA 22313-1450
www.uspto.gov

JOHN PATRICK WARD
BLAKELY SOKOLOFF TAYLOR & ZAFMAN LLP
12400 WILSHIRE BOULEVARD
SEVENTH FLOOR
LOS ANGELES, CA 90025-1030

COPY MAILED

FEB 14 2005

OFFICE OF PETITIONS

ON PETITION

In re Application of :
Morris E. Jones :
Application No. 09/888,128 :
Filed: June 22, 2001 :
Attorney Docket No. CT-P9191-D

This is a decision on the petition, filed February 9, 2005, under 37 CFR 1.313(c)(2) to withdraw the above-identified application from issue after payment of the issue fee.

The petition is **GRANTED**.

The above-identified application is withdrawn from issue for consideration of a submission under 37 CFR 1.114 (request for continued examination). See 37 CFR 1.313(c)(2).

Petitioner is advised that the issue fee paid on December 29, 2004 in the above-identified application cannot be refunded. If, however, the above-identified application is again allowed, petitioner may request that it be applied towards the issue fee required by the new Notice of Allowance.[1]

Telephone inquiries should be directed to Irvin Dingle at (571) 272-3210.

This matter will be forwarded to Technology Center AU 2672 for processing of the request for continued examination under 37 CFR 1.114 and for consideration of the concurrently filed amendment.

Irvin Dingle
Petitions Examiner
Office of Petitions
Office of the Deputy Commissioner
for Patent Examination Policy

---

[1] The request to apply the issue fee to the new Notice may be satisfied by completing and returning the new Issue Fee Transmittal Form PTOL-85(b), which includes the following language thereon: Commissioner for Patents is requested to apply the Issue Fee and Publication Fee (if any) or re-apply any previously paid issue fee to the application identified above. Petitioner is advised that, whether a fee is indicated as being due or not, the Issue Fee Transmittal Form **must** be completed and timely submitted to avoid abandonment. Note the language in bold text on the first page of the Notice of Allowance and Fee(s) Due (PTOL-85).

UNITED STATES PATENT AND TRADEMARK OFFICE

COMMISSIONER FOR PATENTS
UNITED STATES PATENT AND TRADEMARK OFFICE
WASHINGTON, D.C. 20231
www.uspto.gov

SQUARE D COMPANY
INTELLECTUAL PROPERTY DEPARTMENT
1415 SOUTH ROSELLE ROAD
PALATINE, IL 60067

Paper No. 4

COPY MAILED

NOV - 1 2001

OFFICE OF PETITIONS

In re Application of
White .
Application No. 09/888,158
Filed: June 25, 2001
Attorney Docket No. SAA-57

DECISION DISMISSING
PETITION

This is a decision on the paper styled "REQUEST LETTER TO CORRECT FILING RECEIPT" filed August 10, 2001, which is properly treated as a petition under 37 CFR 1.10(c) requesting that the above-identified application be accorded a filing date of June 22, 2001, rather than the presently accorded filing date of June 25, 2001.

Petitioner requests the earlier filing date on the basis that the application was purportedly deposited in Express Mail service on June 22, 2001, pursuant to the requirements of 37 CFR 1.10.

Section 1.10(a) of title 37, Code of Federal Regulations, states:

> Any correspondence received by the Patent and Trademark Office (Office)that was delivered by the "Express Mail Post Office to Addressee" service of the United States Postal Service (USPS) will be considered filed in the Office on the date of deposit with USPS. The date of deposit with the USPS is shown by the "date-in" on the "Express Mail" mailing label or other official USPS notation. If the USPS deposit date cannot be determined, the correspondence will be accorded the Office receipt date as the filing date.

The PTO considers the date the paper or fee is shown to have been deposited as Express Mail as set forth in §1.10(a) to be the "Date-In" on the Express Mail label.

Placing the "Date-In" on the Express Mail label by the postal clerk establishes that the package was actually received by the Postal Service. That is the date that verifies that the package was actually mailed.

The two requirements under 37 CFR 1.10(c) are: First, petitioner must submit a true copy of the "Express Mail" mailing label showing the "date-in" and of any other official notation by the USPS relied upon to show the date of deposit. 37 CFR 1.10(c)(3). Second, petitioner is required to show the number of the "Express Mail" mailing label was placed on the correspondence prior to the original mailing by "Express Mail." 37 CFR 1.10(c)(2).

The petition fails the first requirement because petitioner has not submitted a copy of the Express Mail customer receipt showing a date-in. The petition contains no official notation by the USPS showing the date of deposit.

Accordingly, the petition is dismissed and the filing date remains June 25, 2001, which is the same date shown on the PTO generated bar code affixed to the postcard receipt.

Further correspondence with respect to this matter should be addressed as follows:

By mail: Commissioner for Patents
Box DAC
Washington, D.C. 20231

By FAX: (703) 308-6916
Attn: Office of Petitions

By hand: 4 Crystal Plaza
2201 South Clark Place
Suite 3C23 - Office of Petitions
Arlington, VA 22202-3113

This application is being forwarded to Technology Center 2100 for further processing.

Telephone inquiries specific to this matter should be directed to the undersigned at (703) 308-6712.

E. Shirene Willis

E. Shirene Willis
Petitions Attorney
Office of Petitions
Office of the Deputy Commissioner
for Patent Examination Policy

UNITED STATES PATENT AND TRADEMARK OFFICE

COMMISSIONER FOR PATENTS
UNITED STATES PATENT AND TRADEMARK OFFICE
WASHINGTON, D.C. 20231
www.uspto.gov

JJGJr: 09-02

Paper No. 9

ANDREW S. MARKS
VERTEX PHARMACEUTICALS INC.
130 WAVERLY STREET
CAMBRIDGE MA 02139-4242

COPY MAILED

SEP 1 1 2002

OFFICE OF PETITIONS

In re Application of Kuida, et al. Application No. 09/888,182 Filed: 22 June, 2001 Attorney Docket No.: VPI00-115 US	: : : : : :	DECISION ON PETITION

This is a decision on the petition filed on 17 October, 2001, styled "Petition to Under 37 C.F.R. §1.53(b)" and considered under 37 C.F.R. §1.53(e)[1]--notably, however, Petitioner alleges that the drawings found to be missing from the application "are not necessary for the understanding of the subject matter sought to be patented."

For the reasons set forth below, the petition is **GRANTED in part**.[2]

The application was filed on 22 June, 2001.

On 23 August, 2001, and again on 11 December, 2001, the Office mailed a "Notice of Incomplete Nonprovisional Application" indicating that the application was filed without, *inter alia*, drawings as required under 35 U.S.C. §113 (first sentence).

---

[1] The regulations at 37 C.F.R. §1.53 provide in pertinent part:
§ 1.53 Application number, filing date, and completion of application.

* * *

(e) *Failure to meet filing date requirements.*

(1) If an application deposited under paragraph (b), (c), or (d) of this section does not meet the requirements of such paragraph to be entitled to a filing date, applicant will be so notified, if a correspondence address has been provided, and given a time period within which to correct the filing error.

(2) Any request for review of a notification pursuant to paragraph (e)(1) of this section, or a notification that the original application papers lack a portion of the specification or drawing(s), must be by way of a petition pursuant to this paragraph accompanied by the fee set forth in § 1.17(h). In the absence of a timely (§ 1.181(f)) petition pursuant to this paragraph, the filing date of an application in which the applicant was notified of a filing error pursuant to paragraph (e)(1) of this section will be the date the filing error is corrected.

(3) If an applicant is notified of a filing error pursuant to paragraph (e)(1) of this section, but fails to correct the filing error within the given time period or otherwise timely (§ 1.181(f)) take action pursuant to this paragraph, proceedings in the application will be considered terminated. Where proceedings in an application are terminated pursuant to this paragraph, the application may be disposed of, and any filing fees, less the handling fee set forth in § 1.21(n), will be refunded.

* * *

[2] Pursuant to Petitioner's authorization, the petition fee ($130.00 is refunded and the surcharge ($130.00) is charged to Deposit Account 50-0725.

Petitioner responds:

- with the instant petition stating that the drawings (Figures 1 through 6) found to be missing from the application "are not necessary for the understanding of the subject matter sought to be patented"; and

- a preliminary amendment deleting the references to Figures 1 through 6.

Thus, Petitioner contends, drawings are not necessary for the understanding of the subject matter sought to be patented.

It is the practice of the Office to treat an application that contains at least one process or method claim as an application for which a drawing is not necessary for the understanding of the invention under 35 U.S.C. §113 (first sentence). (See: MPEP §601.01[3])

This application contains method claims, e.g., claims 13 - 21. Therefore, the application should have been treated as an application filed without all of the drawing figures referred to in the specification as discussed in MPEP §601.01(g).[4]

---

[3] The commentary at MPEP §601.01 provides in pertinent part:

* * *

601.01(f) Applications Filed Without Drawings

35 U.S.C. 111(a)(2)(B) and 35 U.S.C. 111(b)(1)(B) each provide, in part, that an "application shall include . . . a drawing as prescribed by section 113 of this title" and 35 U.S.C. 111(a)(4) and 35 U.S.C. 111(b)(4) each provide, in part, that the "filing date . . . shall be the date on which . . . any required drawing are received in the Patent and Trademark Office." 35 U.S.C. 113 (first sentence) in turn provides that an "applicant shall furnish a drawing where necessary for the understanding of the subject matter sought to be patented.

Applications filed without drawings are initially inspected to determine whether a drawing is referred to in the specification, and if not, whether a drawing is necessary for the understanding of the invention. 35 U.S.C. 113 (first sentence).

It has been USPTO practice to treat an application that contains at least one process or method claim as an application for which a drawing is not necessary for an understanding of the invention under 35 U.S.C. 113 (first sentence). The same practice has been followed in composition applications.

* * *

A nonprovisional application having at least one claim, or a provisional application having at least some disclosure, directed to the subject matter discussed above for which a drawing is usually not considered essential for a filing date, not describing drawing figures in the specification, and filed without drawings will simply be processed for examination, so long as the application contains something that can be construed as a written description. A nonprovisional application having at least one claim, or a provisional application having at least some disclosure, directed to the subject matter discussed above for which a drawing is usually not considered essential for a filing date, describing drawing figure(s) in the specification, but filed without drawings will be treated as an application filed without all of the drawing figures referred to in the specification as discussed in MPEP § 601.01(g), so long as the application contains something that can be construed as a written description. In a situation in which the appropriate Technology Center (TC) determines that drawings are necessary under 35 U.S.C. 113 (first sentence) the filing date issue will be reconsidered by the USPTO.

* * *

[4] The commentary at MPEP §601.01 provides in pertinent part:

* * *

601.01(g) Applications Filed Without All Figures of Drawings

The Office of Initial Patent Examination (OIPE) reviews application papers to determine whether all of the figures of the drawings that are mentioned in the specification are present in the application. If the application is filed without all of the drawing figure(s) referred to in the specification, and the application contains something that can be construed as a written description, at least one drawing, if necessary under 35 U.S.C. 113 (first sentence), and, in a nonprovisional application, at least one claim, OIPE will mail a "Notice of Omitted Item(s)" indicating that the application papers so deposited have been accorded a filing date, but are lacking some of the figures of drawings described in the specification. The mailing of a "Notice of Omitted Item(s)" will permit the applicant to either: (1) promptly establish prior receipt in the USPTO of the drawing(s) at

It appears that a "Notice of Omitted Items" should have been mailed instead of the "Notice of Incomplete Nonprovisional Application."

Therefore, the 23 August, 2001, and the 11 December, 2001, "Notice of Incomplete Nonprovisional Application" hereby are vacated.

The application is accorded a filing date of 22 June, 2001.

The petition is granted in part, to the extent that the application will be accorded the filing date of 22 June, 2001, without the drawing containing Figures 1 through 6 as part of the original disclosure of the application.

The application file is being returned to the Office of Initial Patent Examination for further processing with a corrected filing date of 22 June, 2001, indicating in the Office records that "0" sheets of drawings were present on filing, and the mailing of a corrected filing receipt.

Telephone inquiries concerning this matter may be directed to the undersigned at (703)305-9199.

John J. Gillon, Jr.
Senior Attorney
Office of Petitions
Office of the Deputy Commissioner
for Patent Examination Policy

---

issue (generally by way of a date-stamped postcard receipt (MPEP § 503)); or (2) promptly submit the omitted drawing(s) in a nonprovisional application and accept the date of such submission as the application filing date. An applicant asserting that the drawing(s) was in fact deposited in the USPTO with the application papers must, within 2 months from the date of the "Notice of Omitted Item(s)," file a petition under 37 C.F.R. 1.53(e) with the petition fee set forth in 37 C.F.R. 1.17(h), along with evidence of such deposit (37 C.F.R. 1.181(f)). The petition fee will be refunded if it is determined that the drawing(s) was in fact received by the USPTO with the application papers deposited on filing.

* * *

Under the Paperwork Reduction Act of 1995, no persons are required to respond to a collection of information unless it displays valid OMB control number.

PETITION TO ACCEPT UNINTENTIONALLY DELAYED PAYMENT OF MAINTENANCE FEE IN AN EXPIRED PATENT (37 CFR 1.378(c))

Patent Number	Issue Date (YYYY-MM-DD)	Application Number	Filing Date (YYYY-MM-DD)	Docket Number (if applicable)
6450477	2002-09-17	09888194	2001-06-23	SAFO/0004

CAUTION: Maintenance fee (and surcharge, if any) payment must correctly identify: (1) the patent number and (2) the application number of the actual U.S. application leading to issuance of that patent to ensure the fee(s) is/are associated with the correct patent. 37 CFR 1.366(c) and (d).

SMALL ENTITY
☒ Patentee claims, or has previously claimed, small entity status. See 37 CFR 1.27.

LOSS OF ENTITLEMENT TO SMALL ENTITY STATUS
☐ Patentee is no longer entitled to small entity status. See 37 CFR 1.27(g)

NOT Small Entity		Small Entity	
Fee	Code	Fee	Code
○ 3 ½ year	(1551)	◉ 3 ½ year	(2551)
○ 7 ½ year	(1552)	○ 7 ½ year	(2552)
○ 11 ½ year	(1553)	○ 11 ½ year	(2553)

SURCHARGE
The surcharge required by 37 CFR 1.20(i)(2) (Fee Code 1558) must be paid as a condition of accepting unintentionally delayed payment of the maintenance fee.

MAINTENANCE FEE (37 CFR 1.20(e)-(g))
The appropriate maintenance fee must be submitted with this petition.

STATEMENT
THE UNDERSIGNED CERTIFIES THAT THE DELAY IN PAYMENT OF THE MAINTENANCE FEE TO THIS PATENT WAS UNINTENTIONAL

PETITIONER(S) REQUEST THAT THE DELAYED PAYMENT OF THE MAINTENANCE FEE BE ACCEPTED AND THE PATENT REINSTATED

THIS PORTION MUST BE COMPLETED BY THE SIGNATORY OR SIGNATORIES

37 CFR 1.378(d) states: "Any petition under this section must be signed by an attorney or agent registered to practice before the Patent and Trademark Office, or by the patentee, the assignee, or other party in interest."

I certify, in accordance with 37 CFR 1.4(d)(4) that I am

◉ An attorney or agent registered to practice before the Patent and Trademark Office

○ A sole patentee

○ A joint patentee; I certify that I am authorized to sign this submission on behalf of all the other patentees.

○ A joint patentee; all of whom are signing this e-petition

○ The assignee of record of the entire interest

Patent Practitioner			
A signature of the applicant or representative is required in accordance with 37 CFR 1.33 and 10.18. Please see 37 CFR 1.4(d) for the form of the signature			
Signature	/Chance E. Hardie, Regis. No. 55,247/	Date (YYYY-MM-DD)	2006-10-31
Name	Chance E. Hardie	Registration Number	55247

This collection of information is required by 37 CFR 1.378(c). The information is required to obtain or retain a benefit by the public which is to file (and by the USPTO to process) an application. Confidentiality is governed by 35 U.S.C. 122 and 37 CFR 1.11 and 1.14. This collection is estimated to take 1 hour to complete, including gathering, preparing, and submitting the completed application form to the USPTO. Time will vary depending upon the individual case. Any comments on the amount of time you require to complete this form and/ or suggestions for reducing this burden, should be sent to the Chief Information Officer, U.S. Patent and Trademark Office, U.S. Department of Commerce, P.O. Box 1450, Alexandria, VA 22313-1450. DO NOT SEND FEES OR COMPLETED FORMS TO THIS ADDRESS. **This form can only be used when in conjunction with EFS-Web. If this form is mailed to the USPTO, it may cause delays in reinstating the patent.**

Privacy Act Statement

The Privacy Act of 1974 (P.L. 93-579) requires that you be given certain information in connection with your submission of the attached form related to a patent application or patent. Accordingly, pursuant to the requirements of the Act, please be advised that: (1) the general authority for the collection of this information is 35 U.S.C. 2(b)(2); (2) furnishing of the information solicited is voluntary; and (3) the principal purpose for which the information is used by the U.S. Patent and Trademark Office is to process and/or examine your submission related to a patent application or patent. If you do not furnish the requested information, the U.S. Patent and Trademark Office may not be able to process and/or examine your submission, which may result in termination of proceedings or abandonment of the application or expiration of the patent.

The information provided by you in this form will be subject to the following routine uses:

1. The information on this form will be treated confidentially to the extent allowed under the Freedom of Information Act (5 U.S.C. 552) and the Privacy Act (5 U.S.C. 552a). Records from this system of records may be disclosed to the Department of Justice to determine whether the Freedom of Information Act requires disclosure of these record s.

2. A record from this system of records may be disclosed, as a routine use, in the course of presenting evidence to a court, magistrate, or administrative tribunal, including disclosures to opposing counsel in the course of settlement negotiations.

3. A record in this system of records may be disclosed, as a routine use, to a Member of Congress submitting a request involving an individual, to whom the record pertains, when the individual has requested assistance from the Member with respect to the subject matter of the record.

4. A record in this system of records may be disclosed, as a routine use, to a contractor of the Agency having need for the information in order to perform a contract. Recipients of information shall be required to comply with the requirements of the Privacy Act of 1974, as amended, pursuant to 5 U.S.C. 552a(m).

5. A record related to an International Application filed under the Patent Cooperation Treaty in this system of records may be disclosed, as a routine use, to the International Bureau of the World Intellectual Property Organization, pursuant to the Patent Cooperation Treaty.

6. A record in this system of records may be disclosed, as a routine use, to another federal agency for purposes of National Security review (35 U.S.C. 181) and for review pursuant to the Atomic Energy Act (42 U.S.C. 218(c)).

7. A record from this system of records may be disclosed, as a routine use, to the Administrator, General Services, or his/her designee, during an inspection of records conducted by GSA as part of that agency's responsibility to recommend improvements in records management practices and programs, under authority of 44 U.S.C. 2904 and 2906. Such disclosure shall be made in accordance with the GSA regulations governing inspection of records for this purpose, and any other relevant (i.e., GSA or Commerce) directive. Such disclosure shall not be used to make determinations about individuals.

8. A record from this system of records may be disclosed, as a routine use, to the public after either publication of the application pursuant to 35 U.S.C. 122(b) or issuance of a patent pursuant to 35 U.S.C. 151. Further, a record may be disclosed, subject to the limitations of 37 CFR 1.14, as a routine use, to the public if the record was filed in an application which became abandoned or in which the proceedings were terminated and which application is referenced by either a published application, an application open to public inspections or an issued patent.

9. A record from this system of records may be disclosed, as a routine use, to a Federal, State, or local law enforcement agency, if the USPTO becomes aware of a violation or potential violation of law or regulation.

UNITED STATES PATENT AND TRADEMARK OFFICE

Commissioner for Patents
United States Patent and Trademark Office
P.O. Box 1450
Alexandria, VA 22313-1450
www.uspto.gov

In re Patent No. 6450477
Issue Date: September 17,2002
Application No. 09888194
Filed: June 23,2001
Attorney Docket No. SAFO/0004

:
:DECISION GRANTING PETITION
:UNDER 37 CFR 1.378(c)
:

This is a decision on the electronic petition, filed October 31,2006 ,under 37 CFR 1.378(c) to accept the unintentionally delayed payment of the 3.5 year maintenance fee for the above-identified patent.

The petition is GRANTED.

The maintenance fee is accepted, and the above-identified patent reinstated as of October 31,2006 . This decision also constitutes notice that the fee has been accepted. An electronic copy of the petition and this decision has been created as an entry in an Image File Wrapper. Nevertheless, petitioner should print and retain an independent copy

Telephone inquires related to this electronic decision should be directed to the Electronic Business Center at 1-866-217-9197.

UNITED STATES PATENT AND TRADEMARK OFFICE

Commissioner for Patents
United States Patent and Trademark Office
P.O. Box 1450
Alexandria, VA 22313-1450
www.uspto.go

MAILED

NOV 30 2005

Director's Office
Group 3700

Mark Lappin, Esq.
McDermott, Will & Emery
28 State Street
Boston, MA 02109

Paper No. 13

In re Application of
O'LEARY, DAVID
Appl No.: 09/888,199
Filed: June 23, 2001
For: RESERVOIR PRESSURE SYSTEM FOR MEDICAMENT INHALER
Attorney Docket Number: NHC0031A-USA

DECISION GRANTING PETITION
37 CFR 1.181

This application is before the Director of Technology Center 3700 for reconsideration of the Notice of Abandonment mailed June 2, 2003 for failure to timely reply to the office mailed August 13, 2002. In view of petitioner's comments in the paper submitted April 21, 2005, the request is treated as a petition to withdraw of the holding of abandonment pursuant to 37 CFR 1.181 based on non-receipt of the office action. No fee is required for this petition.

The petition is granted.

A review of the file history indicates that a Change of Correspondence Address was filed on July 2, 2002, but was not entered into the file until after the Office Action of August 13, 2002 was mailed. Therefore the office action in question was not mailed to the proper address of record. Also, in support of the request, petitioner has provided a showing of non-receipt of the Office action in accordance with MPEP 711.03(c)IA.

It is also noted that petitioner has submitted a copy of a petition filed under 37 CFR 1.137(b), an amendment, and a postcard receipt dated June 3, 2004. The original copy of this petition is not in the file and has not been decided. The petition under 37 CFR 1.137(b) is dismissed as moot in view of the present petition being granted.

In view of the above, the Notice of Abandonment mailed June 2, 2003 is hereby vacated and the holding of abandonment is withdrawn. Accordingly, it appears that petitioner is entitled to have the Office action of August 13, 2002 remailed. However, petitioner has obtained a copy of the office action and subsequently filed a response on June 3, 2004. Therefore, physical remailing of the office action is not necessary.

The application will be forwarded to the Technical Support Staff to have an entry in the PALM system made to show the office action of August 13, 2002 has been remailed prior to the response of June 3, 2004. The amendment of June 3, 2004 will be entered into the file and the application will then be forwarded to the examiner for action.

Richard A. Bertsch

Richard A. Bertsch, Director
Technology Center 3700

UNITED STATES PATENT AND TRADEMARK OFFICE

Commissioner for Patents
United States Patent and Trademark Office
P.O. Box 1450
Alexandria, VA 22313-1450
www.uspto.gov

James D. Ivey
Law Offices of James D. Ivey
3025 Totterdell Street
Oakland, CA 94611-1742

COPY MAILED

OCT 19 2004

OFFICE OF PETITIONS

In re Application of	:	
Pun et al.	:	DECISION ACCORDING STATUS
Application No. 09/888,222	:	UNDER 37 CFR 1.47(a)
Filed: June 22, 2001	:	
Attorney Docket No. P-2177	:	

This is in response to the petition under 37 CFR 1.47(a), filed February 26, 2002 (certificate of mailing dated February 7, 2002). Applicants obtained a four-month extension of time to respond. Accordingly, the petition is filed timely. The petition was recently forwarded to the Office of Petitions for a decision on the merits. The Office sincerely apologizes for any inconvenience to applicants.

The petition is granted.

Petitioner has shown that Wallace Ritchie, the non-signing inventor, has refused to join in the filing of the above-identified application after having been presented with the application papers. Specifically, the statement of facts of James D. Ivey and the letter sent to Mr. Ritchie from Mr. Ivey establish that the inventor was mailed the application papers, including the specification, claims and drawings, but failed to respond to the request that he sign the declaration.

The above-identified application and papers have been reviewed and found in compliance with 37 CFR 1.47(a). This application is hereby accorded Rule 1.47(a) status. As provided in Rule 1.47(c), this Office will forward notice of this application's filing to the non-signing inventor at the address given in the present petition. Notice of the filing of this application will also be published in the Official Gazette.

The matter is being referred to Technology Center Art Unit 2654 for examination in due course.

Telephone inquiries regarding this decision should be directed to the undersigned at (571) 272-3211.

Christina Tartera Donnell

Christina Tartera Donnell
Petitions Attorney
Office of Petitions

UNITED STATES PATENT AND TRADEMARK OFFICE

Commissioner for Patents
United States Patent and Trademark Office
P.O. Box 1450
Alexandria, VA 22313-1450
www.uspto.gov

Wallace Ritchie
2 Lazy Eight Drive
Daytona Beach, FL 32124

COPY MAILED

OCT 1 9 2004

OFFICE OF PETITIONS

In re Application of :
Pun et al. :
Application No. 09/888,222 :
Filed: June 22, 2001 :
Attorney Docket No. P-2177 :

LETTER

Dear Mr. Ritchie:

You are named as a joint inventor in the above-identified United States patent application filed under the provisions of 35 U.S.C. 116 (United States Code) and 37 CFR 1.47(a), Rules of Practice in Patent Cases. Should a patent be granted on the application you will be designated therein as a joint inventor.

As a named inventor you are entitled to inspect any paper in the file wrapper of the application, order copies of all or any part thereof (at a prepaid cost per 37 CFR 1.19) or make your position of record in the application. Alternatively, you may arrange to do any of the preceding through a registered patent attorney or agent presenting written authorization from you. If you care to join the application, counsel of record (see below) would presumably assist you. Joining in the application would entail the filing of an appropriate oath or declaration by you pursuant to 37 CFR 1.63.

Requests for information regarding your application should be directed to the File Information Unit at (703) 308-2733. Information regarding how to pay for and order a copy of the application, or a specific paper in the application, should be

directed to Certification Division at (703) 308-9726 or 1-800-972-6382 (outside the Washington D.C. area).

Christina Tartera Donnell

Christina Tartera Donnell
Senior Petitions Attorney
Office of Petitions

James D. Ivey
Law Offices of James D. Ivey
3025 Totterdell Street
Oakland, CA 94611-1742

UNITED STATES PATENT AND TRADEMARK OFFICE

Commissioner for Patents
United States Patent and Trademark Office
P. O. Box 1450
Alexandria, VA 22313-1450
www.uspto.gov

Paper No. 11

HICKMAN PALERMO TRUONG & BECKER LLP
1600 WILLOW STREET
SAN JOSE, CA 95125-5106

COPY MAILED

MAY 1 4 2003

OFFICE OF PETITIONS

In re Application of	:	
Anant Sahai et al	:	
Application No. 09/888,227	:	DECISION GRANTING PETITION
Filed: June 22, 2001	:	UNDER 37 CFR 1.137(f)
Attorney Docket No. M-15002 US	:	

This is a decision on the petition, filed May 5, 2003, to revive the instant nonprovisional application under the unintentional provisions of 37 CFR 1.137(f).

The petition is **GRANTED**.

The instant nonprovisional application is the subject of an application filed in a foreign country on June 21, 2002. However, the U.S. Patent and Trademark Office was unintentionally not notified of this filing within 45 days subsequent to the filing of the subject application in a foreign country.

In view of the above, this application became abandoned pursuant to 35 U.S.C. § 122(b)(2)(B)(iii) and 37 CFR 1.213(c) for failure to timely notify the Office of the filing of an application in a foreign country, or under a multilateral international agreement, that requires publication of applications 18 months after filing.

A petition under 37 CFR 1.137(f) must be accompanied by:

(1) the reply which is met by the notification of such filing in a foreign country or under a multinational treaty;

(2) the petition fee as set forth in 37 CFR 1.17(m); and

(3) a statement that the entire delay in filing the required reply from the due date of the reply until the filing of a grantable petition was unintentional.

The instant petition has been found to be in compliance with 37 CFR 1.137(f). Accordingly, the failure to timely notify the Office of a foreign or international filing within 45 days after the date of filing of such foreign or international application as provided by 35 U.S.C. § 122(b)(2)(B)(iii) and 37 CFR 1.213(c) is accepted as having been unintentionally delayed.

The previous Request and Certification under 35 U.S.C. § 122(b)(2)(B)(i) has been rescinded. A Notice Regarding Rescission of Nonpublication Request which sets forth the projected publication date of August 21, 2003 accompanies this decision on petition.

A change of correspondence address signed by Edward C. Kwok, petitioner herein, was submitted concurrently with the instant petition. There is, however, no indication that Mr. Kwok was ever given a power of attorney or authorization of agent to prosecute the above-identified application. If Mr. Kwok desires to receive future correspondence regarding this application, the appropriate power of attorney or authorization of agent must be submitted. While a courtesy copy of this decision is being mailed to Mr. Kwok, all future correspondence will be directed to the address currently of record until such time as appropriate instructions are received to the contrary.

Any inquiries concerning this decision may be directed to the undersigned at (703) 305-8680.

This application is being forwarded to Technology Center Art Unit 2631 for examination in due course.

Frances Hicks

Frances Hicks
Petitions Examiner
Office of Petitions
Office of the Deputy Commissioner
for Patent Examination Policy

ATTACHMENT: Notice Regarding Rescission of Nonpublication Request

cc:

MacPherson Kwok Chen & Heid LLP
2001 Gateway Place, Suite 195E
San Jose, CA 95110

UNITED STATES PATENT AND TRADEMARK OFFICE

COMMISSIONER FOR PATENTS
UNITED STATES PATENT AND TRADEMARK OFFICE
P.O. BOX 1450
ALEXANDRIA, VA 22313-1450
www.uspto.gov

MARSH, FISCHMANN & BREYFOGLE LLP
8055 East Tufts Avenue
Suite 450
Denver CO 80237

MAILED

JUN 30 2010

OFFICE OF PETITIONS

In re Application of	:	
Blonder et al.	:	DECISION ON APPLICATION
Application No. 09/888,235	:	FOR PATENT TERM ADJUSTMENT
Filed: 06/22/2001	:	
Atty Docket No. 42830-00234	:	

This is a decision on the "APPLICATION FOR RECONSIDERATION OF PATENT TERM ADJUSTMENT UNDER 37 C.F.R. § 1.705(b)," filed February 22, 2010. Applicants request that the initial determination of patent term adjustment under 35 U.S.C. 154(b) be corrected to one thousand four hundred eighty-nine (1,489) days.

The application for patent term adjustment is **DISMISSED**.

On January 7, 2010, the Office mailed the Determination of Patent Term Adjustment under 35 U.S.C. 154(b) in the above-identified application. The Notice stated that the patent term adjustment (PTA) to date is 1,260 days. On February 22, 2010, applicants timely submitted the instant application for patent term adjustment[1]. Applicant states that no terminal disclaimer was filed in this application.

On petition, applicants assert that they are entitled to 37 days of Office delay pursuant to 37 CFR 1.702(a)(2). Specifically, applicants explain:

> It is submitted the Office Action issued by the United States Patent and Trademark Office (USPTO) on 1/28/2004 should not be considered as a response to a reply under 35 U.S.C. §132, pursuant to §1.702(a)(2), because that

[1] The Office records show that the issue fee was received on April 5, 2010.

> Office Action was deficient and was expressly vacated in a new Office Action issued 4/5/2004. See, the 4/5/2004 Office Action and accompanying Interview Summary.

Petition, 02/12/10, p. 3.

The Office has considered applicants' argument, but does not find it persuasive. Pursuant to 37 CFR 1.702(a),

> Subject to the provisions of 35 U.S.C. 154(b) and this subpart, the term of an original patent shall be adjusted if the issuance of the patent was delayed due to the failure of the Office to:
>
> (2) Respond to a reply under 35 U.S.C. 132 or to an appeal taken under 35 U.S.C. 134 not later than four months after the date on which the reply was filed or the appeal was taken;

On January 28, 2004, the examiner responded to applicants' reply to the final Office action filed on October 28, 2003. The non-final Office action of January 28, 2004, met the minimum requirements of an action under 35 U.S.C. 132 and was mailed within four months of the October 28, 2003 filing date of the reply. Accordingly, no period of adjustment for Office delay was entered. A review of the record confirms that no period of adjustment for Office delay is warranted.

The subsequent mailing of the non-final Office action by the examiner vacating the Office action of January 28, 2004, does not negate the fact that the Office took action in this application within the meaning of § 1.702(a)(2) on January 28, 2004. Specifically, the Office notes that an examiner does not have the authority to vacate or rescind an Office action. Unless vacated by the Technology Center Director, the action originally mailed by the examiner on January 28, 2004, will be used for purposes of calculating patent term adjustment.

Next, applicants assert that the period of adjustment under 37 CFR 1.702(e) should be 1,695 days, not 1,503 days. Applicants state:

> It is submitted the Notice of Appeal filed 8/23/2005 should not be considered as the beginning of the appeal

> period under §1.703(e) for purposes of the adjustment under §1.702(e) because that Notice of Appeal was filed only to maintain a previously filed appeal following issuance by the Examiner of an Office Action while the application was on appeal and which was not responded to. The period of delay due to appeal under § 1.702(e) should, therefore, be measured from the original Notice of Appeal filed on 4/21/2005.

Petition, 02/12/10, p. 3.

The Office has considered applicant's argument, but finds it without merit. The mailing of the non-final Office action on June 27, 2005, withdrew the finality of the rejection and re-opened prosecution of the application. Accordingly, the application was no longer under appeal and applicant had to file a new notice of appeal in order to appeal to the Board for review of the examiner's rejections. Thus, the Office correctly calculated the period of adjustment under 37 CFR 1.702(e) beginning on the date on which a notice of appeal to the Board of Patent Appeals and Interferences was filed under 35 U.S.C. 134 and § 41.31, October 31, 2005, and ending on the date of a final decision in favor of the applicant by the Board of Patent Appeals and Interferences, December 11, 2009.

In view thereof, the patent term adjustment at the time of the mailing of the notice of allowance will remain 1,260 days.

The $200.00 fee set forth in 37 CFR 1.18(e) is acknowledged. No additional fees are required.

Applicants are reminded that any delays by the Office pursuant to 37 CFR 1.702(a)(4) and 1.702(b) and any applicant delays under 37 CFR 1.704(c)(10) will be calculated at the time of the issuance of the patent and applicants will be notified of the revised patent term adjustment to be indicated on the patent in the Issue Notification letter that is mailed to applicants approximately three weeks prior to issuance.

The Office of Data Management has been advised of this decision. This matter is being referred to the Office of Data Management for issuance of the patent.

Telephone inquiries specific to this matter should be directed to the undersigned at (571) 272-3211.

C. T. Donnell

Christina Tartera Donnell
Senior Petitions Attorney
Office of Petitions

UNITED STATES PATENT AND TRADEMARK OFFICE

Commissioner for Patents
United States Patent and Trademark Office
P.O. Box 1450
Alexandria, VA 22313-1450
www.uspto.gov

COPY MAILED

DEC 18 2009

OFFICE OF PETITIONS

CLARK & ELBING LLP
101 FEDERAL STREET
BOSTON MA 02110

In re Patent No. 6,939,850	:	
Issue Date: September 6, 2005	:	
Application No. 09/888,243	:	LETTER
Filed: June 22, 2001	:	
Attorney Docket No. 01997/211003	:	

This is in response to the notice filed by facsimile on July 24, 2009, for acceptance of a fee deficiency submission under 37 CFR 1.28.

Your fee deficiency submission under 37 CFR 1.28 is hereby **NOT ACCEPTED**.

It appears that the petition was not properly signed by a person having authority to prosecute in the above-identified patent. Therefore, the request can not be accepted at this time.

Petitioner's attention is directed to 37 CFR 1.33(b), which states.

> (b) Amendments and other papers. Amendments and other papers, except for written assertions pursuant to § 1.27(c)(2)(ii) of this part, filed in the application must be signed by:
>
> (1) A registered patent attorney or patent agent of record appointed in compliance with § 1.32(b);
> (2) A registered patent attorney or patent agent not of record who acts in a representative capacity under the provisions of § 1.34;
> (3) An assignee as provided for under §3.71(b) of this chapter; or
> (4) All of the applicants (§ 1.41(b)) for patent, unless there is an assignee of the entire interest and such assignee has taken action in the application in accordance with § 3.71 of this chapter.

The file does not indicate a change of address has been submitted, although the address given on the petition differs from the address of record. If appropriate, a change of address should be filed in accordance with MPEP 601.03. A courtesy copy of this decision is being mailed to the address given on the petition; however, the Office will mail all future correspondence solely to the address of record.

Accordingly, the request cannot be accepted until it is signed by all inventors, an attorney/agent who is registered to practice before the U.S. Patent and Trademark Office, or the assignee of the entire interest. If the request is signed by an assignee, the assignee must comply with the requirements of 37 CFR 3.73(b).

Inquiries concerning this communication should be directed to the undersigned at (571) 272-3213.

Cheryl Gibson Baylor

Cheryl Gibson-Baylor
Petitions Examiner
Office of Petitions

cc: Daniel O' Brien
Massachusetts Institute of Technology
Technology Licensing Office
Five Cambridge Center, Kendall Square
Cambridge, Massachusetts 02142-1493

UNITED STATES PATENT AND TRADEMARK OFFICE

Commissioner for Patents
United States Patent and Trademark Office
P. O. Box 1450
Alexandria, VA 22313-1450
www.uspto.gov

Paper No. 5

BLAKELY SOKOLOFF TAYLOR & ZAFMAN LLP
SEVENTH FLOOR
12400 WILSHIRE BOULEVARD
LOS ANGELES, CA 90025-1026

COPY MAILED

MAY 23 2003

OFFICE OF PETITIONS

In re Application of	:	
John J. Schuster et al	:	
Application No. 09/888,244	:	DECISION GRANTING PETITION
Filed: June 23, 2001	:	UNDER 37 CFR 1.137(f)
Attorney Docket No. 004524.P019	:	

This is a decision on the petition, filed May 16, 2003, to revive the instant nonprovisional application under the unintentional provisions of 37 CFR 1.137(f).

The petition is **GRANTED**.

Petitioner states that the instant nonprovisional application is the subject of an application filed in a foreign country on February 22, 2002. However, the U.S. Patent and Trademark Office was unintentionally not notified of this filing within 45 days subsequent to the filing of the subject application in a foreign country.

In view of the above, this application became abandoned pursuant to 35 U.S.C. § 122(b)(2)(B)(iii) and 37 CFR 1.213(c) for failure to timely notify the Office of the filing of an application in a foreign country, or under a multilateral international agreement, that requires publication of applications 18 months after filing.

A petition under 37 CFR 1.137(f) must be accompanied by:

(1) the reply which is met by the notification of such filing in a foreign country or under a multinational treaty;

(2) the petition fee as set forth in 37 CFR 1.17(m); and

(3) a statement that the entire delay in filing the required reply from the due date of the reply until

the filing of a grantable petition was unintentional.

The instant petition has been found to be in compliance with 37 CFR 1.137(f). Accordingly, the failure to timely notify the Office of a foreign or international filing within 45 days after the date of filing of such foreign or international application as provided by 35 U.S.C. § 122(b)(2)(B)(iii) and 37 CFR 1.213(c) is accepted as having been unintentionally delayed.

The previous Request and Certification under 35 U.S.C. § 122(b)(2)(B)(i) has been previously rescinded.

Any inquiries concerning this decision may be directed to the undersigned at (703) 305-8680.

This application is being forwarded to Technology Center Art Unit 2142 for examination in due course.

Frances Hicks

Frances Hicks
Petitions Examiner
Office of Petitions
Office of the Deputy Commissioner
for Patent Examination Policy

OIPE IAP86
AUG 1 1 2006
PATENT & TRADEMARK OFFICE

COFC

Case FR-6842-C*
U.S. 6,958,423 B2

IN THE UNITED STATES PATENT AND TRADEMARK OFFICE

JOHN C. PARKS, ET AL.	)
PATENT NO.: 6,958,423 B2	)
ISSUED: OCTOBER 25, 2005	)
APPLICATION NO.: 09/888,246	)
CONFIRMATION NUMBER: 9114	)
FILED: JUNE 22, 2001	)
FOR: BROMINATION PROCESS	)

Certificate
AUG 1 5 2006
of Correction

Attn: Certificate of Correction Branch
Commissioner for Patents
P.O. Box 1450
Alexandria, VA 22313-1450
Sir:

REQUEST FOR CERTIFICATE OF CORRECTION

In accordance with 37 C.F.R. 1.322, Patentee for the above-captioned patent hereby requests issuance of a Certificate of Correction to correct a printing error in the patent due to error by the U.S. Patent and Trademark Office. The following summarizes the correction requested and the location of the error in the application file.

On the title page, under References Cited, Foreign Patent Documents, Patent Number -- FR 1411524; 10/1975 -- was omitted from the list of References Cited. This is in accordance with the Information Disclosure Statement filed on August 24, 2001 and acknowledged by the Examiner on March 29, 2005.

On page 3, second column reads "U.S. Appl. No. 08/758,987, filed Jul. 25, 1985 entitled, "Polybrominated Diphenylethane Fire Retardant", Amgad S. Mossaad et al., 9 pages" and should read - - U.S. Appl. No. 06/758,987, filed Jul. 25, 1985 entitled, "Polybrominated Diphenylethane Fire Retardant", Amgad S. Mossaad et al., 9 pages - -. This is in accordance with the First Supplemental Information Disclosure Statement filed May 17, 2005 and acknowledged by the Examiner on July 6, 2005.

AUG 15 2006

Column 4, line 53 reads "maybe" and should read - - may be - -. This is in accordance with the specification as originally filed.

Column 5, line 37 reads "arc" and should read - - are - -. This is in accordance with the specification as originally filed.

Column 5, line 48 reads "traction" and should read - - fraction - -. This is in accordance with the specification as originally filed.

Column 9, line 32 reads "wilt" and should read - - will - -. This is in accordance with the specification as originally filed.

Enclosed herewith are two copies of a completed Form PTO-1050 (PTO/SB/44) Certificate of Correction, containing the appropriate indication of the corrections requested.

Accordingly, issuance of the enclosed Certificate of Correction is solicited.

Respectfully submitted,

John F. Sieberth
Reg. No. 17,704
Sieberth & Patty, L.L.C.
4703 Bluebonnet Blvd.
Baton Rouge, LA 70809

Telephone: (225) 291-4600
Facsimile: (225) 291-4606

CERTIFICATE OF MAILING

I hereby certify that in accordance with standard business practice, this paper (along with any referred to as being attached or enclosed) is to be deposited on the date shown below with the United States Postal Service as first class mail in an envelope addressed to: Commissioner for Patents, P.O. Box 1450, Alexandria, VA 22313-1450

August 8, 2006
Date

Deborah A. Brouillette
Deborah A. Brouillette

AUG 15 2006

PTO/SB/44 (04-05)
Approved for use through 04/30/2007. OMB 0651-0033
U.S. Patent and Trademark Office; U.S. DEPARTMENT OF COMMERCE
Under the Paperwork Reduction Act of 1995, no persons are required to respond to a collection of information unless it displays a valid OMB control number.
(Also Form PTO-1050)

UNITED STATES PATENT AND TRADEMARK OFFICE
CERTIFICATE OF CORRECTION

PATENT NO. : 6,958,423 B2

APPLICATION NO.: 09/888,246

ISSUE DATE : October 25, 2005

INVENTOR(S) : John C. Parks et al.

It is certified that an error appears or errors appear in the above-identified patent and that said Letters Patent is hereby corrected as shown below:

On the title page, under References Cited, Foreign Patent Documents, Patent Number -- FR 1411524; 10/1975 -- was omitted from the list of References Cited.

On page 3, second column reads "U.S. Appl. No. 08/758,987, filed Jul. 25, 1985 entitled, "Polybrominated Diphenylethane Fire Retardant", Amgad S. Mossaad et al., 9 pages" and should read - - U.S. Appl. No. 06/758,987, filed Jul. 25, 1985 entitled, "Polybrominated Diphenylethane Fire Retardant", Amgad S. Mossaad et al., 9 pages - -.

Column 4, line 53 reads "maybe" and should read - - may be - -.

Column 5, line 37 reads "arc" and should read - - are - -.

Column 5, line 48 reads "traction" and should read - - fraction - -.

Column 9, line 32 reads "wilt" and should read - - will - -.

MAILING ADDRESS OF SENDER (Please do not use customer number below):

John F. Sieberth
Sieberth & Patty, L.L.C.
4703 Bluebonnet Boulevard
Baton Rouge, Louisiana 70809

This collection of information is required by 37 CFR 1.322, 1.323, and 1.324. The information is required to obtain or retain a benefit by the public which is to file (and by the USPTO to process) an application. Confidentiality is governed by 35 U.S.C. 122 and 37 CFR 1.14. This collection is estimated to take 1.0 hour to complete, including gathering, preparing, and submitting the completed application form to the USPTO. Time will vary depending upon the individual case. Any comments on the amount of time you require to complete this form and/or suggestions for reducing this burden, should be sent to the Chief Information Officer, U.S. Patent and Trademark Office, U.S. Department of Commerce, P.O. Box 1450, Alexandria, VA 22313-1450. DO NOT SEND FEES OR COMPLETED FORMS TO THIS ADDRESS. SEND TO: **Attention Certificate of Corrections Branch, Commissioner for Patents, P.O. Box 1450, Alexandria, VA 22313-1450.**

If you need assistance in completing the form, call 1-800-PTO-9199 and select option 2.

AUG 15 2006

PTO/SB/44 (04-05)
Approved for use through 04/30/2007. OMB 0651-0033
U.S. Patent and Trademark Office; U.S. DEPARTMENT OF COMMERCE
Under the Paperwork Reduction Act of 1995, no persons are required to respond to a collection of information unless it displays a valid OMB control number.
(Also Form PTO-1050)

UNITED STATES PATENT AND TRADEMARK OFFICE
CERTIFICATE OF CORRECTION

PATENT NO. : 6,958,423 B2

APPLICATION NO.: 09/888,246

ISSUE DATE : October 25, 2005

INVENTOR(S) : John C. Parks et al.

It is certified that an error appears or errors appear in the above-identified patent and that said Letters Patent is hereby corrected as shown below:

On the title page, under References Cited, Foreign Patent Documents, Patent Number --FR 1411524; 10/1975 -- was omitted from the list of References Cited.

On page 3, second column reads "U.S. Appl. No. 08/758,987, filed Jul. 25, 1985 entitled, "Polybrominated Diphenylethane Fire Retardant", Amgad S. Mossaad et al., 9 pages" and should read - - U.S. Appl. No. 06/758,987, filed Jul. 25, 1985 entitled, "Polybrominated Diphenylethane Fire Retardant", Amgad S. Mossaad et al., 9 pages - -.

Column 4, line 53 reads "maybe" and should read - - may be - -.

Column 5, line 37 reads "arc" and should read - - are - -.

Column 5, line 48 reads "traction" and should read - - fraction - -.

Column 9, line 32 reads "wilt" and should read - - will - -.

MAILING ADDRESS OF SENDER (Please do not use customer number below):

John F. Sieberth
Sieberth & Patty, L.L.C.
4703 Bluebonnet Boulevard
Baton Rouge, Louisiana 70809

This collection of information is required by 37 CFR 1.322, 1.323, and 1.324. The information is required to obtain or retain a benefit by the public which is to file (and by the USPTO to process) an application. Confidentiality is governed by 35 U.S.C. 122 and 37 CFR 1.14. This collection is estimated to take 1.0 hour to complete, including gathering, preparing, and submitting the completed application form to the USPTO. Time will vary depending upon the individual case. Any comments on the amount of time you require to complete this form and/or suggestions for reducing this burden, should be sent to the Chief Information Officer, U.S. Patent and Trademark Office, U.S. Department of Commerce, P.O. Box 1450, Alexandria, VA 22313-1450. DO NOT SEND FEES OR COMPLETED FORMS TO THIS ADDRESS. SEND TO: **Attention Certificate of Corrections Branch, Commissioner for Patents, P.O. Box 1450, Alexandria, VA 22313-1450.**

If you need assistance in completing the form, call 1-800-PTO-9199 and select option 2.

AUG 15 2006

SPE RESPONSE FOR CERTIFICATE OF CORRECTION

Paper No.: _____

DATE : 9-19-06

TO SPE OF : ART UNIT 1616

SUBJECT : Request for Certificate of Correction for Appl. No.: 09/888246 Patent No.: 6095842 3

Please respond to this request for a certificate of correction within 7 days.

Please review the requested changes/corrections as shown in the **COCIN** document(s) in the IFW application image. No new matter should be introduced, nor should the scope or meaning of the claims be changed.

Please check Ref cited / Related US App. Data

Please complete the response (see below) and forward the completed response to scanning using document code **COCX**.

E Young

Certificates of Correction Branch

703-308-9390 ext. 117

Thank You For Your Assistance

The request for issuing the above-identified correction(s) is hereby:

Note your decision on the appropriate box.

- ☒ **Approved** — All changes apply.
- ☐ **Approved in Part** — Specify below which changes do not apply.
- ☐ **Denied** — State the reasons for denial below.

Comments: _____

SHEENI PADMANABHAN
SUPERVISORY PATENT EXAMINER

5/1/07

SPE

Art Unit 1617

UNITED STATES PATENT AND TRADEMARK OFFICE

COMMISSIONER FOR PATENTS
UNITED STATES PATENT AND TRADEMARK OFFICE
P.O. BOX 1450
ALEXANDRIA, VA 22313-1450
www.uspto.gov

Western Digital Corporation
20511 Lake Forest Drive
C205 – Intellectual Property Department
Lake Forest, CA 92630

COPY MAILED

MAR 1 4 2005

OFFICE OF PETITIONS

In re Application of	:	
Jonathan Lee Hammann, et al.	:	
Application No. 09/888,275	:	ON PETITION
Filed: June 22, 2001	:	
Attorney Docket No. K35A0924	:	

This is a decision on the petition under 37 CFR 1.137(b), filed February 25, 2004, to revive the above-identified application.

The petition is **GRANTED**.

There is no indication that the person signing the instant petition was ever given a power of attorney or authorization of agent to prosecute the above-identified application. However, in accordance with 37 CFR 1.34(a), the signature of Howard Sheerin appearing on the petition shall constitute a representation to the United States Patent and Trademark Office that he/she is authorized to represent the particular party in whose behalf he/she acts. However, if Mr. Sheerin desires to receive future correspondence regarding this application, the appropriate power of attorney or authorization of agent must be submitted. A courtesy copy of this decision is being mailed to petitioner. Nevertheless, all future correspondence regarding this application file will be directed solely to the address of record until otherwise instructed.

Telephone inquiries concerning this decision should be directed to the undersigned at (571) 272-3223.

The application file is being referred to the Publishing Division to be processed into a patent.

Marianne E. Jenkins
Petitions Examiner
Office of Petitions
Office of the Deputy Commissioner
for Patent Examination Policy

cc: Howard H. Sheerin
23233 N. Pima Rd., Suite 113, PMB 174
Scottsdale, AZ 85255

UNITED STATES PATENT AND TRADEMARK OFFICE

Commissioner for Patents
United States Patent and Trademark Office
P.O. Box 1450
Alexandria, VA 22313-1450
www.uspto.gov

November 30, 2006

Jason T. Evans
WESTERN DIGITAL TECHNOLOGIES, INC.
20511 Lake Forest Drive
Lake Forest, CA 92630

Patent No.: 6892217 B1
Application No.: 09/888275
Inventor(s): **Jonathan Lee Hanmann, et al.**
Issued: **May 10, 2005**
Title: **MOBILE TERMINAL FOR DISPLAYING A RICH TEXT DOCUMENT COMPRISING CONDITIONAL CODE FOR IDENTIFYING ADVERTISING INFORMATION STORED LOCALLY OR ON THE INTERNET**

Re: Request for Certificate of Correction

Consideration has been given your request for the issuance of a certificate of correction for the above-identified patent under the provisions of Rule(s) 1.322 and/or 1.323.

Assignees' names and addresses (assignment data) printed in a patent, are based *solely* on information supplied in the appropriate space for identifying the assignment data, i.e., item 3 of the Issue Fee Transmittal Form PTOL-85B. Granting of a request under 37 CFR 3.81(b) is required to correct applicant's error providing ***incorrect or erroneous*** assignment data, *before* issuance of a Certificate of Correction, under 37 CFR 1.323 *(see Manual of Patent Examining Procedures (M.P.E.P) Chp.1400, sect. 1481).* This procedure is required *at any time after the issue fee is paid*, including after issuance of the patent.

In view of the foregoing, your request, in this mater, is hereby denied.

A request to correct the Assignee under 37 CFR 3.81(b) should include:

A. **the processing fee set forth in 37 CFR 1.117(h) (currently $130);**
B. a statement that the failure to include the correct assignee name on the PTOL-85B was inadvertent; and
C. a copy of the Notice of Recordation of Assignment Document, reflecting the reel and frame number where the assignment(s) is recorded and/or reflecting proof of *the date* the assignment was submitted for recordation.

In the Request, Applicant(s) may request that the file be forwarded to Certificates of Correction Branch, for issuance of a Certificate of Correction, if the Request is granted.

Any request under 37 CFR 3.81(b) should be directed to the following address or facsimile number:

By mail:	Mail Stop PETITIONS Commissioner for Patents Post Office Box 1450 Alexandria, VA 22313-1450
By hand:	Customer Service Window Mail Stop Petitions Randolph Building 401 Dulany Street Alexandria, VA 22314
By fax:	(571) 273-0025 ATTN: Office of Petitions

If a fee (currently $100) was previously submitted for consideration of a Request for Certificate of Correction, under CFR 1.323, to correct assignment data, no additional fee is required.

A certificate of correction will be issued to correct the remaining error mentioned in your request.

Virginia Tolbert
For Cecelia Newman
Decisions & Certificate of Correction Branch
(703) 305-8309 or (703) **308-9390 ext 113**

vt

UNITED STATES PATENT AND TRADEMARK OFFICE

Commissioner for Patents
United States Patent and Trademark Office
P.O. Box 1450
Alexandria, VA 22313-1450
www.uspto.gov

WESTERN DIGITAL TECHNOLOGIES, INC.
ATTN: RENEE QUICK
20511 LAKE FOREST DR.
E-118H
LAKE FOREST CA 92630

COPY MAILED

JUL 27 2007

OFFICE OF PETITIONS

In re Patent No. 6,892,217 :
Issued: May 10, 2005 :
Application No. 09/888,275 : ON PETITION
Filed: June 22, 2001 :
Attorney Docket Number: K35A0924 :

This is a decision on the petition filed January 12, 2007, under 37 CFR 3.81(b) [1], to correct the assignee's name on the front of the Patent.

The petition is **GRANTED**.

Petitioner states that the failure to include the correct name of the assignee on the Fee(s) Transmittal form PTOL-85(b) filed February 25, 2005 was inadvertent. Accordingly, petitioner requests that a certificate of correction be issued to reflect the correct name of the assignee on the front page of the Letters Patent.

37 CFR 3.81(b), effective June 25, 2004, reads:

> *After payment of the issue fee:* Any request for issuance of an application in the name of the assignee submitted after the date of payment of the issue fee, and any request for a patent to be corrected to state the name of the assignee, must state that the assignment was submitted for recordation as set forth in § 3.11 before issuance of the patent, and must include a request for a certificate of correction under § 1.323 of this chapter (accompanied by the fee set forth in § 1.20(a) and the processing fee set forth in § 1.17(i) of this chapter.

A request for a certificate of correction was filed June 16, 2006 and was dismissed in a decision mailed November 30, 2006 since the request was not accompanied by a petition under 37 CFR 3.81.

---

[1] *See* Official Gazette of June 22, 2004

Office assignment records however, reflect that WESTERN DIGITAL VENTURES, INC., is the assignee of record. Accordingly, as the request complies with the provisions of 37 CFR 3.81(b), it would be appropriate for a certificate of correction to issue.

The petition fee in the amount of $130.00 and the fee for the certificate of correction in the amount of $100 have been charged to deposit account no. 23-1209, per the authorization of Renee Franks Quick on July 19, 2007 in a telephone conversation with the undersigned.

Inquiries concerning this decision should be directed to the undersigned at (571) 272-3212. Any questions concerning the issuance of a certificate of correction should be directed to the Certificates of Correction Branch at (703) 305-8309.

This file is being referred to the Certificates of Correction Branch for issuance of a certificate of correction.

Patricia Faison-Ball

Patricia Faison-Ball
Senior Petitions Attorney
Office of Petitions

UNITED STATES PATENT AND TRADEMARK OFFICE

COMMISSIONER FOR PATENTS
UNITED STATES PATENT AND TRADEMARK OFFICE
WASHINGTON, D.C. 20231
www.uspto.gov

Paper No. 5

FENWICK & WEST
TWO PALO ALTO SQUARE
PALO ALTO, CA 94306

COPY MAILED

OCT 17 2001

OFFICE OF PETITIONS

In re Application of :
David A. Fotland et al :
Application No. 09/888,296 :
Filed: October 3, 2001 :
Attorney Docket No. 20880-06029; Case 6029 :
US :

NOTICE

This is a notice regarding your request for acceptance of a fee deficiency submission under 37 CFR 1.28. On September 1, 1998, the Court of Appeals for the Federal Circuit held that 37 CFR 1.28(c) is the sole provision governing the time for correction of the erroneous payment of the issue fee as a small entity. **See DH Technology v. Synergystex International, Inc. 154 F.3d 1333, 47 USPQ2d 1865 (Fed. Cir. Sept. 1, 1998).**

The Office no longer investigates or rejects original or reissue applications under 37 CFR 1.56. **1098 Off. Gaz. Pat. Office 502 (January 3, 1989).** Therefore, nothing in this Notice is intended to imply that an investigation was done.

Your fee deficiency submission under 37 CFR 1.28 is hereby **ACCEPTED**.

Inquiries related to this communication should be directed to the Office of Petitions Staff at (703) 305-9285.

This file is being forwarded to Initial Patent Examination Division.

Wan Laymon
Petitions Examiner
Office of Petitions
Office of the Deputy Commissioner
for Patent Examination Policy

UNITED STATES PATENT AND TRADEMARK OFFICE

Commissioner for Patents
United States Patent and Trademark Office
P.O. Box 1450
Alexandria, VA 22313-1450
www.uspto.gov

Paper 5

MERCK AND CO., INC
P O BOX 2000
RAHWAY NJ 07065-0907

COPY MAILED

DEC 14 2006

OFFICE OF PETITIONS

In re Application of
Robert K. Evans
Application No. 09/888,304
Filed: June 22, 2001
Attorney Docket No. **20703Y**

ON PETITION

This is a decision on the petition filed December 7, 2006 to withdraw the holding of abandonment for the above-identified application. The petition is treated under 37 CFR 1.181.

The petition to withdraw the holding of abandonment is **GRANTED**.

The application was held abandoned on October 11, 2001 for failure to file a timely response to the Notice to File Missing Parts mailed August 10, 2001, which set a two (2) month shortened period for reply. No extensions of time in accordance with 37 CFR 1.136(a) were obtained. Accordingly, a Notice of Abandonment was mailed April 22, 2005.

Petitioner asserts that a proper response, was mailed on September 27, 2001. In support, petitioner submits a copy of the reply in the form of the executed oath or declaration, said to have been filed but not acknowledged with the U.S. Patent and Trademark Office, which includes a certificate of mail dated September 27, 2001, pursuant to 37 CFR 1.8.

The evidence submitted corroborates a timely response to the Notice to File Missing Parts. Accordingly, the holding of abandonment is withdrawn and the Notice of Abandonment is vacated. No petition fee Is due and none has been charged.

This matter is being referred to the Office of Initial Patent Examination for further pre-examination processing.

Telephone inquiries concerning this matter should be directed to the undersigned Petitions Attorney at (571) 272-3212.

Patricia Faison-Ball

Patricia Faison-Ball
Senior Petitions Attorney
Office of Petitions

UNITED STATES PATENT AND TRADEMARK OFFICE

Commissioner for Patents
United States Patent and Trademark Office
P.O. Box 1450
Alexandria, VA 22313-1450
www.uspto.gov

PALMER & DODGE LLP
KATHLEEN M. WILLIAMS
111 HUNTINGTON AVENUE
BOSTON, MA 02199

COPY MAILED

AUG 2 0 2007

OFFICE OF PETITIONS

In re Application of Ian Tomlinson et al Application No. 09/888,313 Filed: June 22, 2001 Attorney Docket No. 8039/1122	DECISION GRANTING PETITION UNDER 37 CFR 1.313(c)(2)

This is a decision on the petition, filed August 17, 2007, under 37 CFR 1.313(c)(2) to withdraw the above-identified application from issue after payment of the issue fee.

The petition is **GRANTED**.

The above-identified application is withdrawn from issue for consideration of a submission under 37 CFR 1.114 (request for continued examination). See 37 CFR 1.313(c)(2).

Petitioner is advised that the issue fee paid on April 14, 2006 in the above-identified application cannot be refunded. If, however, the above-identified application is again allowed, petitioner may request that it be applied towards the issue fee required by the new Notice of Allowance.[1]

Telephone inquiries should be directed to the undersigned at (571) 272-3218.

This matter is being referred to Technology Center AU 1639 for processing of the request for continued examination under 37 CFR 1.114 and for consideration of the Information Disclosure Statement.

Frances Hicks
Petitions Examiner
Office of Petitions

C:\Documents and Settings\fhicks\My Documents\470\aug10\888313

---

[1] *The request to apply the issue fee to the new Notice may be satisfied by completing and returning the new Part B – Fee(s) Transmittal Form (along with any balance due at the time of submission). Petitioner is advised that the Issue Fee Transmittal Form* ***must*** *be completed and timely submitted to avoid abandonment.*

Sector

PTO/SB/21 (08-00)

Please type a plus sign (+) inside this box → [+]

Approved for use through 10/31/2002. OMB 0651-0031
U.S. Patent and Trademark Office: U.S. DEPARTMENT OF COMMERCE

Under the Paperwork Reduction Act of 1995, no persons are required to respond to a collection of information unless it displays a valid OMB control number.

OIPE JC16
JAN 07 2002
PATENT & TRADEMARK OFFICE

TRANSMITTAL FORM

(to be used for all correspondence after initial filing)

Application Number	09/888,320
Filing Date	June 22, 2001
First Named Inventor	Barry, Clifton E.
Group Art Unit	1645
Examiner Name	
Total Number of Pages in This Submission: 1	Attorney Docket Number: 015280413100

ENCLOSURES *(check all that apply)*

- [x] Fee Transmittal Form
  - [ ] Fee Attached
- [ ] Amendment / Response
  - [ ] After Final
  - [ ] Affidavits/declaration(s)
- [ ] Extension of Time Request
- [ ] Express Abandonment Request
- [ ] Information Disclosure Statement
- [ ] Certified Copy of Priority Document(s)
- [x] Response to Missing Parts/ Incomplete Application
  - [x] Response to Missing Parts under 37 CFR 1.52 or 1.53
- [ ] Assignment Papers *(for an Application)*
- [ ] Drawing(s)
- [ ] Licensing-related Papers
- [ ] Petition Routing Slip (PTO/SB/69) and Accompanying Petition
- [ ] Petition to Convert to a Provisional Application
- [ ] Power of Attorney, Revocation Change of Correspondence Address
- [ ] Terminal Disclaimer
- [ ] Request for Refund
- [ ] CD, Number of CD(s)
- [ ] After Allowance Communication to Group
- [ ] Appeal Communication to Board of Appeals and Interferences
- [ ] Appeal Communication to Group *(Appeal Notice, Brief, Reply Brief)*
- [ ] Proprietary Information
- [ ] Status Letter
- [x] Other Enclosure(s) *(please identify below)*:

Return Postcard, copy of Notice to File Missing Parts; Resp. to Notice of Missing Parts w/fee authorization deposit acct #20-1430, Declarations

Remarks: The Commissioner is authorized to charge any additional fees to Deposit Account 20-1430.

SIGNATURE OF APPLICANT, ATTORNEY, OR AGENT

Firm and Individual name	Townsend and Townsend and Crew LLP Laurence J. Hyman — Reg No. 35,551
Signature	Laurence J. Hyman
Date	10/15/01

CERTIFICATE OF MAILING

I hereby certify that this correspondence is being deposited with the United States Postal Service with sufficient postage as first class mail in an envelope addressed to: Assistant Commissioner for Patents, Washington, D.C. 20231 on this date: Oct 15, 2001

Typed or printed name	Patricia Andrews
Signature	Patricia Andrews — Date: 10/15/01

Burden Hour Statement: This form is estimated to take 0.2 hours to complete. Time will vary depending upon the needs of the individual case. Any comments on the amount of time you are required to complete this form should be send to the Chief Information Officer, U.S. Patent and Trademark Office, Washington, DC 20231. DO NOT SEND FEES OR COMPLETED FORMS TO THIS ADDRESS. SEND TO: Assistant Commissioner for Patents, Washington, DC 20231.

SF 1281095 v1

PTO/SB/17 (09-00)
Approved for use through 10/31/2002. OMB 0651-0032
Patent and Trademark Office: U.S. DEPARTMENT OF COMMERCE
Under the Paperwork Reduction Act of 1995, no persons are required to respond to a collection of information unless it displays a valid OMB control number.

OIPE JC40 JAN 07 2002 PATENT & TRADEMARK OFFICE

FEE TRANSMITTAL for FY 2001

Patent fees are subject to annual revision.

TOTAL AMOUNT OF PAYMENT ($) 1440

Complete if Known	
Application Number	09/888,320
Filing Date	June 22, 2001
First Named Inventor	Barry, Clifton E.
Examiner Name	
Group Art Unit	1645
Attorney Docket No.	015280-413100US

METHOD OF PAYMENT

1. ☒ The Commissioner is hereby authorized to charge indicated fees and credit any over payments to:

Deposit Account Number: 20-1430

Deposit Account Name: Townsend and Townsend and Crew LLP

☒ Charge Any Additional Fee Required Under 37 CFR 1.16 and 1.17

☐ Applicant claims small entity status. See 37 CFR 1.27

2. ☐ **Payment Enclosed:**

☐ Check ☐ Credit card ☐ Money Order ☐ Other

FEE CALCULATION

1. BASIC FILING FEE

Large Fee Code	Entity Fee ($)	Small Fee Code	Entity Fee ($)	Fee Description	Fee Paid
101	710	201	355	Utility filing fee	740
106	320	206	160	Design filing fee	
107	490	207	245	Plant filing fee	
108	710	208	355	Reissue filing fee	
114	150	214	75	Provisional filing fee	

SUBTOTAL (1) ($)740

2. EXTRA CLAIM FEES

			Extra Claims		Fee from below		Fee Paid
Total Claims	33	-20** =	13	X	$18	=	$234
Independent Claims	7	-3** =	4	X	$84	=	$336
Multiple Dependent				X		=	

Large Fee Code	Entity Fee ($)	Small Fee Code	Entity Fee ($)	Fee Description
103	18	203	9	Claims in excess of 20
102	80	202	40	Independent claims in excess of 3
104	270	204	135	Multiple dependent claim, if not paid
109	80	209	40	** Reissue independent claims over original patent
110	18	210	9	** Reissue claims in excess of 20 and over original patent

SUBTOTAL (2) ($)570

**or number previously paid, if greater; For Reissues, see above

FEE CALCULATION (continued)

3. ADDITIONAL FEES

Large Fee Code	Entity Fee ($)	Small Fee Code	Entity Fee ($)	Fee Description	Fee Paid
105	130	205	65	Surcharge - late filing fee or oath	130
127	50	227	25	Surcharge - late provisional filing fee or cover sheet.	
139	130	139	130	Non-English specification	
147	2,520	147	2,520	For filing a request for reexamination	
112	920*	112	920*	Requesting publication of SIR prior to Examiner action	
113	1,840*	113	1,840*	Requesting publication of SIR after Examiner action	
115	110	215	55	Extension for reply within first month	
116	390	216	195	Extension for reply within second month	
117	890	217	445	Extension for reply within third month	
118	1,390	218	695	Extension for reply within fourth month	
128	1,890	228	945	Extension for reply within fifth month	
119	310	219	155	Notice of Appeal	
120	310	220	155	Filing a brief in support of an appeal	
121	270	221	135	Request for oral hearing	
138	1,510	138	1,510	Petition to institute a public use proceeding	
140	110	240	55	Petition to revive – unavoidable	
141	1,240	241	620	Petition to revive – unintentional	
142	1,240	242	620	Utility issue fee (or reissue)	
143	440	243	220	Design issue fee	
144	600	244	300	Plant issue fee	
122	130	122	130	Petitions to the Commissioner	
123	50	123	50	Petitions related to provisional applications	
126	180	126	180	Submission of Information Disclosure Stmt	
581	40	581	40	Recording each patent assignment per property (times number of properties)	
146	710	246	355	Filing a submission after final rejection (37 CFR § 1.129(a))	
149	710	249	355	For each additional invention to be examined (37 CFR § 1.129(b))	
179	710	279	355	Request for Continued Examination (RCE)	
169	900	169	900	Request for expedited examination of a design application	
Other fee (specify)					

The Commissioner is authorized to charge any additional fees to the above noted Deposit Account.

*Reduced by Basic Filing Fee Paid **SUBTOTAL (3)** ($)130

SUBMITTED BY				Complete (if applicable)	
Name (Print/Type)	Laurence J. Hyman	*Registration No. (Attorney/Agent)*	35,551	*Telephone*	415-576-0200
Signature				*Date*	10/15/01

WARNING: Information on this form may become public. Credit card information should not be included on this form. Provide credit card information and authorization on PTO-2038.

Burden Hour Statement: This form is estimated to take 0.2 hours to complete. Time will vary depending upon the needs of the individual case. Any comments on the amount of time you are required to complete this form should be sent to the Chief Information Officer, Patent and Trademark Office, Washington, DC 20231. DO NOT SEND FEES OR COMPLETED FORMS TO THIS ADDRESS. SEND TO: Assistant Commissioner for Patents, Washington, DC 20231. SF 1281083 v1

OIPE
JAN 07 2002
PATENT & TRADEMARK OFFICE

I hereby certify that this correspondence is being deposited with the United States Postal Service as first class mail in an envelope addressed to:

Assistant Commissioner for Patents
Attn: Box Missing Parts
Washington, D.C. 20231

On Oct. 15, 2001

TOWNSEND and TOWNSEND and CREW LLP

By: Patricia Anders

PATENT
Attorney Docket No.: 015280-413100US
Client Reference No.: E-093-00/1

IN THE UNITED STATES PATENT AND TRADEMARK OFFICE

In re application of: Clifton E. Barry, III, et al. Application No.: 09/888,320 Filed: June 22, 2001 For: METHODS OF DIAGNOSING MULTIDRUG RESISTANT TUBERCULOSIS	Examiner: Unassigned Art Unit: 1645 TRANSMITTAL LETTER – RESPONSE TO NOTICE OF MISSING PARTS

Attn: Box Missing Parts
Assistant Commissioner for Patents
Washington, D.C. 20231

Sir:

Pursuant to the Notice to File Missing Parts of Nonprovisional Application, dated 08/21/2001, enclosed are the following to be made of record in the above-identified application:

1) Executed Declaration
2) Copy of Notice of Missing Parts

Please charge Deposit Account No. 20-1430 for the following fees:

Large Entity:	(a)	Filing Fee (§ 1.16(a)) (Large Entity)	$740.00
	(b)	Excess Claims Fees (§ 1.16(b), (c)):	

	33 - 20 = 13	x $18.00 =	$234.00
	7 - 3 = 4	x $84.00 =	$336.00
(c)	Missing Parts Surcharge		$130.00
	TOTAL FEES TO BE CHARGED		$1,440.00

The Commissioner is hereby authorized to charge any additional fees associated with this paper or during the pendency of this application, or credit any overpayment, to Deposit Account No. 20-1430. This Transmittal Letter is submitted in triplicate.

Respectfully submitted,

Laurence J. Hyman
Reg. No. 35,551

Customer No. 20350

TOWNSEND and TOWNSEND and CREW LLP
Two Embarcadero Center, 8th Floor
San Francisco, California 94111-3834
Tel: 415-576-0200
Fax: 415 576-0300
LJH:pja

SF 1281064 v1

UNITED STATES PATENT AND TRADEMARK OFFICE

COMMISSIONER FOR PATENTS
UNITED STATES PATENT AND TRADEMARK OFFICE
WASHINGTON, D.C. 20231
www.uspto.gov

OIPE
JAN 07 2002
PATENT & TRADEMARK OFFICE

APPLICATION NUMBER	FILING/RECEIPT DATE	FIRST NAMED APPLICANT	ATTORNEY DOCKET NUMBER
09/888,320	06/22/2001	Clifton E. Barry III	015280-413100US

CONFIRMATION NO. 7214

FORMALITIES LETTER

OC000000006456235

20350
TOWNSEND AND TOWNSEND AND CREW
TWO EMBARCADERO CENTER
EIGHTH FLOOR
SAN FRANCISCO, CA 94111-3834

Date Mailed: 08/21/2001

NOTICE TO FILE MISSING PARTS OF NONPROVISIONAL APPLICATION

01/11/2002 BABRAHA1 00000027 201430 09888320

01 FC:101 740.00 CH
02 FC:105 130.00 CH
03 FC:103 234.00 CH
04 FC:102 336.00 CH

FILED UNDER 37 CFR 1.53(b)

Filing Date Granted

An application number and filing date have been accorded to this application. The item(s) indicated below, however, are missing. Applicant is given **TWO MONTHS** from the date of this Notice within which to file all required items and pay any fees required below to avoid abandonment. Extensions of time may be obtained by filing a petition accompanied by the extension fee under the provisions of 37 CFR 1.136(a).

- The statutory basic filing fee is missing.
  Applicant must submit $ **710** *to complete the basic filing fee and/or file a small entity statement claiming such status (37 CFR 1.27).*
- Total additional claim fee(s) for this application is $554.
  - **$234** for **13** total claims over 20.
  - **$320** for **4** independent claims over 3 .
- The oath or declaration is unsigned.
- To avoid abandonment, a late filing fee or oath or declaration surcharge as set forth in 37 CFR 1.16(e) of $130 for a non-small entity, must be submitted with the missing items identified in this letter.
- **The balance due by applicant is $ 1394.**

- This application clearly fails to comply with the requirements of 37 C.F.R. 1.821-1.825. Applicant's attention is directed to the final rulemaking notice published at 55 FR 18230 (May 1, 1990), and 1114 OG 29 (May 15, 1990). If the effective filing date is on or after July 1, 1998, see the final rulemaking notice published at 63 FR 29620 (June 1, 1998) and 1211 OG 82 (June 23, 1998). If the effective filing date is on or after September 8, 2000, see the final rulemaking notice published in the Federal Register at 65 FR 54604 (September 8, 2000) and 1238 OG 145 (September 19, 2000). Applicant must provide an initial computer readable form (CRF) copy of the "Sequence Listing", an initial paper or compact disc copy of the "Sequence Listing", as well as an amendment directing its entry into the application. Applicant must also provide a statement that the content of the sequence listing information recorded in computer readable form is identical to the written (on paper or compact disc) sequence listing and, where applicable, includes no new matter, as required by 37 CFR 1.821(e), 1.821(f), 1.821(g), 1.825(b), or 1.825(d). If applicant desires the sequence listing in the instant application to be identical with that of another application on file in the U.S. Patent and Trademark Office, such request in accordance with 37 CFR 1.821(e) may be submitted in lieu of a new CRF.

For questions regarding compliance to these requirements, please contact:

- **For Rules Interpretation, call (703) 308-4216**
- **To Purchase PatentIn Software, call (703) 306-2600**
- **For PatentIn Software Program Help, call (703) 306-4119 or e-mail at patin21help@uspto.gov or patin3help@uspto.gov**

A copy of this notice MUST be returned with the reply.

Customer Service Center
Initial Patent Examination Division (703) 308-1202

PART 2 - COPY TO BE RETURNED WITH RESPONSE

0360

I hereby certify that this correspondence is being deposited with the United States Postal Service as first class mail in an envelope addressed to:

U.S. Patent and Trademark Office
Box SEQUENCE
Arlington, VA 22202

On 1/31/02

TOWNSEND and TOWNSEND and CREW LLP

By: Patricia Andrus

OIPE JC101 FEB 0 5 2002 PATENT & TRADEMARK OFFICE

PATENT

Attorney Docket No.: 015280-413100US
Client Reference No.: E-093-00/1

Box Seq

IN THE UNITED STATES PATENT AND TRADEMARK OFFICE

In re application of:

BARRY et al.

Application No.: 09/888,320

Filed: June 22, 2001

For: METHODS OF DIAGNOSING MULTIDRUG RESISTANT TUBERCULOSIS

Examiner: Not yet assigned

Art Unit: 1645

TRANSMITTAL LETTER –RESPONSE TO NOTICE OF INCOMPLETE REPLY

Attn: Box SEQUENCE
Assistant Commissioner for Patents
P.O. Box 2327
Arlington, VA 22202

Sir:

Pursuant to the Notice of Incomplete Reply (Nonprovisional Application), dated January 17, 2002, enclosed are the following to be made of record in the above-identified application:

1) Petition to Extend Time (4 months)
2) Communication Under 37 CFR sections 1.821-1.825 and Preliminary Amendment
3) Computer Readable Disk
4) Sequence Listing
5) Copy of Notice of Incomplete Reply

PATENT

As noted, this submission contains an electronic copy of a sequence listing. The "Questions and Answers Concerning Postal Service Emergency," posted on the PTO's website on January 28, 2002, directs Applicants that all filings of sequence listings in electronic form be mailed to Box Sequence. Pursuant to these instructions, this Response is accordingly being mailed to the above Box SEQUENCE address rather than to Box Missing Parts.

Please charge Deposit Account No. 20-1430 for the following fees: Petition to Extend Time, $1,440.00.

The Commissioner is hereby authorized to charge any additional fees associated with this paper or during the pendency of this application, or credit any overpayment, to Deposit Account No. 20-1430. This Transmittal Letter is submitted in triplicate.

Respectfully submitted,

Laurence J. Hyman
Reg. No. 35,551

Customer No. 20350

TOWNSEND and TOWNSEND and CREW LLP
Two Embarcadero Center, 8th Floor
San Francisco, California 94111-3834
Tel: 415-576-0200
Fax: 415 576-0300
LJH:pja

SF 1313289 v1

PTO/SB/17 (09-00)
Approved for use through 10/31/2002. OMB 0651-0032
Patent and Trademark Office: U.S. DEPARTMENT OF COMMERCE
Under the Paperwork Reduction Act of 1995, no persons are required to respond to a collection of information unless it displays a valid OMB control number.

FEE TRANSMITTAL for FY 2001

Patent fees are subject to annual revision.

OIPE JC41 FEB 0 5 2002 PATENT & TRADEMARK OFFICE

TOTAL AMOUNT OF PAYMENT ($) 1440

Complete if Known	
Application Number	09/888,320
Filing Date	June 22, 2001
First Named Inventor	Barry, Clifton E.
Examiner Name	Not yet assigned
Group Art Unit	1645
Attorney Docket No.	015280-413100US

METHOD OF PAYMENT

1. ☒ The Commissioner is hereby authorized to charge indicated fees and credit any over payments to:

Deposit Account Number: 20-1430

Deposit Account Name: Townsend and Townsend and Crew LLP

☒ Charge Any Additional Fee Required Under 37 CFR 1.16 and 1.17

☐ Applicant claims small entity status. See 37 CFR 1.27

2. ☐ **Payment Enclosed:**

☐ Check ☐ Credit card ☐ Money Order ☐ Other

FEE CALCULATION

1. BASIC FILING FEE

Large Fee Code	Entity Fee ($)	Small Fee Code	Entity Fee ($)	Fee Description	Fee Paid
101	740	201	370	Utility filing fee	
106	330	206	165	Design filing fee	
107	510	207	255	Plant filing fee	
108	740	208	370	Reissue filing fee	
114	160	214	80	Provisional filing fee	

SUBTOTAL (1) ($)

2. EXTRA CLAIM FEES

			Extra Claims		Fee from below		Fee Paid
Total Claims		-20**	=		X	=	
Independent Claims		-3**	=		X	=	
Multiple Dependent					X	=	

Large Fee Code	Entity Fee ($)	Small Fee Code	Entity Fee ($)	Fee Description
103	18	203	9	Claims in excess of 20
102	84	202	42	Independent claims in excess of 3
104	280	204	140	Multiple dependent claim, if not paid
109	84	209	42	** Reissue independent claims over original patent
110	18	210	9	** Reissue claims in excess of 20 and over original patent

SUBTOTAL (2) ($)

**or number previously paid, if greater; For Reissues, see above

FEE CALCULATION (continued)

3. ADDITIONAL FEES

Large Fee Code	Entity Fee ($)	Small Fee Code	Entity Fee ($)	Fee Description	Fee Paid
105	130	205	65	Surcharge - late filing fee or oath	
127	50	227	25	Surcharge - late provisional filing fee or cover sheet.	
139	130	139	130	Non-English specification	
147	2,520	147	2,520	For filing a request for reexamination	
112	920*	112	920*	Requesting publication of SIR prior to Examiner action	
113	1,840*	113	1,840*	Requesting publication of SIR after Examiner action	
115	110	215	55	Extension for reply within first month	
116	400	216	200	Extension for reply within second month	
117	920	217	460	Extension for reply within third month	
118	1,440	218	720	Extension for reply within fourth month	1440
128	1,960	228	980	Extension for reply within fifth month	
119	320	219	160	Notice of Appeal	
120	320	220	160	Filing a brief in support of an appeal	
121	280	221	140	Request for oral hearing	
138	1,510	138	1,510	Petition to institute a public use proceeding	
140	110	240	55	Petition to revive – unavoidable	
141	1,280	241	640	Petition to revive – unintentional	
142	1,280	242	640	Utility issue fee (or reissue)	
143	460	243	230	Design issue fee	
144	620	244	310	Plant issue fee	
122	130	122	130	Petitions to the Commissioner	
123	50	123	50	Petitions related to provisional applications	
126	180	126	180	Submission of Information Disclosure Stmt	
581	40	581	40	Recording each patent assignment per property (times number of properties)	
146	740	246	370	Filing a submission after final rejection (37 CFR § 1.129(a))	
149	740	249	370	For each additional invention to be examined (37 CFR § 1.129(b))	
179	740	279	370	Request for Continued Examination (RCE)	
169	900	169	900	Request for expedited examination of a design application	
Other fee (specify)					

The Commissioner is authorized to charge any additional fees to the above noted Deposit Account.

*Reduced by Basic Filing Fee Paid

SUBTOTAL (3) ($)1440

SUBMITTED BY

Complete *(if applicable)*

Name (Print/Type)	Laurence J. Hyman	*Registration No. (Attorney/Agent)*	35,551	*Telephone*	415-576-0200
Signature				*Date*	1/31/02

WARNING: Information on this form may become public. Credit card information should not be included on this form. Provide credit card information and authorization on PTO-2038.

Burden Hour Statement: This form is estimated to take 0.2 hours to complete. Time will vary depending upon the needs of the individual case. Any comments on the amount of time you are required to complete this form should be sent to the Chief Information Officer, Patent and Trademark Office, Washington, DC 20231. DO NOT SEND FEES OR COMPLETED FORMS TO THIS ADDRESS. SEND TO: Assistant Commissioner for Patents, Washington, DC 20231. SF 1313304 v1

OIPE JC101
FEB 0 5 2002
PATENT & TRADEMARK OFFICE

UNITED STATES PATENT AND TRADEMARK OFFICE

COMMISSIONER FOR PATENTS
UNITED STATES PATENT AND TRADEMARK OFFICE
WASHINGTON, D.C. 20231
www.uspto.gov

APPLICATION NUMBER	FILING/RECEIPT DATE	FIRST NAMED APPLICANT	ATTORNEY DOCKET NUMBER
09/888,320	06/22/2001	Clifton E. Barry III	015280-413100US

CONFIRMATION NO. 7214
FORMALITIES LETTER
OC000000007325666

20350
TOWNSEND AND TOWNSEND AND CREW, LLP
TWO EMBARCADERO CENTER
EIGHTH FLOOR
SAN FRANCISCO, CA 94111-3834

Date Mailed: 01/17/2002

NOTICE OF INCOMPLETE REPLY (NONPROVISIONAL)

Filing Date Granted

The U.S. Patent and Trademark Office has received your reply on 01/07/2002 to the Notice to File Missing Parts (Notice) mailed 08/21/2001 and it has been entered into the nonprovisional application. The reply, however, does not include the following items required in the Notice.

The period of reply remains as set forth in the Notice. You may, however, obtain EXTENSIONS OF TIME under the provisions of 37 CFR 1.136 (a) accompanied by the appropriate fee (37 CFR 1.17(a)).

A complete reply must be timely filed to prevent ABANDONMENT of the above-identified application.

- This application clearly fails to comply with the requirements of 37 C.F.R. 1.821-1.825. Applicant's attention is directed to the final rulemaking notice published at 55 FR 18230 (May 1, 1990), and 1114 OG 29 (May 15, 1990). If the effective filing date is on or after July 1, 1998, see the final rulemaking notice published at 63 FR 29620 (June 1, 1998) and 1211 OG 82 (June 23, 1998). If the effective filing date is on or after September 8, 2000, see the final rulemaking notice published in the Federal Register at 65 FR 54604 (September 8, 2000) and 1238 OG 145 (September 19, 2000). Applicant must provide an initial computer readable form (CRF) copy of the "Sequence Listing", an initial paper or compact disc copy of the "Sequence Listing", as well as an amendment directing its entry into the application. Applicant must also provide a statement that the content of the sequence listing information recorded in computer readable form is identical to the written (on paper or compact disc) sequence listing and, where applicable, includes no new matter, as required by 37 CFR 1.821(e), 1.821(f), 1.821(g), 1.825(b), or 1.825(d). If applicant desires the sequence listing in the instant application to be identical with that of another application on file in the U.S. Patent and Trademark Office, such request in accordance with 37 CFR 1.821(e) may be submitted in lieu of a new CRF.

For questions regarding compliance to these requirements, please contact:

- **For Rules Interpretation, call (703) 308-4216**
- **To Purchase PatentIn Software, call (703) 306-2600**
- **For PatentIn Software Program Help, call (703) 306-4119 or e-mail at patin21help@uspto.gov or patin3help@uspto.gov**

A copy of this notice MUST be returned with the reply.

Customer Service Center
Initial Patent Examination Division (703) 308-1202
PART 2 - COPY TO BE RETURNED WITH RESPONSE

UNITED STATES PATENT AND TRADEMARK OFFICE

Commissioner for Patents
United States Patent and Trademark Office
P.O. Box 1450
Alexandria, VA 22313-1450
www.uspto.gov

CHAN LAW GROUP LC
1055 W. 7TH ST,
SUITE 1880
LOS ANGELES CA 90017

COPY MAILED

OCT 1 0 2008

OFFICE OF PETITIONS

In re Application of :

DAVISON, Jeff :
Application No. 09/888,329 : DECISION ON PETITION
Filed: June 22, 2001 : TO WITHDRAW
Attorney Docket No. **1323.703** : FROM RECORD

This is a decision on the Request to Withdraw as attorney or agent of record under 37 C.F.R. § 1.36(b), filed July 28, 2008.

The request is **APPROVED**.

A grantable request to withdraw as attorney/agent of record must be signed by every attorney/agent seeking to withdraw or contain a clear indication that one attorney is signing on behalf of another/others. The Office requires the practitioner(s) requesting withdrawal to certify that he, she, or they have: (1) given reasonable notice to the client, prior to the expiration of the response period, that the practitioner(s) intends to withdraw from employment; (2) delivered to the client or a duly authorized representative of the client all papers and property (including funds) to which the client is entitled; and (3) notified the client of any responses that may be due and the time frame within which the client must respond, pursuant 37 CFR 10.40(c).

The request was signed by Lisa A. Karczewski on behalf of all attorneys of record who are associated with customer No. 26129. All attorneys/agents associated have been withdrawn. Applicant is reminded that there is no attorney of record at this time.

The request to change the correspondence address of record is not acceptable as the requested correspondence address is not that of: (1) the first named signing inventor; or (2) an intervening assignee of the entire interest under 37 C.F.R 3.71. All future communications from the Office will be directed to the first named signing inventor.

There is an outstanding Office action mailed July 24, 2008 that requires a reply from the applicant.

Telephone inquiries concerning this decision should be directed to Michelle R. Eason at 571-272-4231.

Michelle R. Eason
Paralegal Specialist
Office of Petitions

cc: **JEFF DAVISON**
1421 VICTORIA BLVD.
ROCKLEDGE, FL 32955

cc: **VERTICAL COMPUTER SYSTEMS, INC.**
201 MAIN STREET, SUITE 1175
FORT WORTH, TX 76102

UNITED STATES PATENT AND TRADEMARK OFFICE

Commissioner for Patents
United States Patent and Trademark Office
P. O. Box 1450
Alexandria, VA 22313-1450
www.uspto.gov

Paper No. 11

HICKMAN PALERMO TRUONG & BECKER LLP
1600 WILLOW STREET
SAN JOSE, CA 95125-5106

COPY MAILED

MAY 1 4 2003

OFFICE OF PETITIONS

In re Application of	:	
Anant Sahai et al	:	
Application No. 09/888,338	:	DECISION GRANTING PETITION
Filed: June 22, 2001	:	UNDER 37 CFR 1.137(f)
Attorney Docket No. 60021-0013	:	

This is a decision on the petition, filed May 5, 2003, to revive the instant nonprovisional application under the unintentional provisions of 37 CFR 1.137(f).

The petition is **GRANTED**.

The instant nonprovisional application is the subject of an application filed in a foreign country on June 21, 2002. However, the U.S. Patent and Trademark Office was unintentionally not notified of this filing within 45 days subsequent to the filing of the subject application in a foreign country.

In view of the above, this application became abandoned pursuant to 35 U.S.C. § 122(b)(2)(B)(iii) and 37 CFR 1.213(c) for failure to timely notify the Office of the filing of an application in a foreign country, or under a multilateral international agreement, that requires publication of applications 18 months after filing.

A petition under 37 CFR 1.137(f) must be accompanied by:

(1) the reply which is met by the notification of such filing in a foreign country or under a multinational treaty;

(2) the petition fee as set forth in 37 CFR 1.17(m); and

(3) a statement that the entire delay in filing the required reply from the due date of the reply until the filing of a grantable petition was unintentional.

The instant petition has been found to be in compliance with 37 CFR 1.137(f). Accordingly, the failure to timely notify the Office of a foreign or international filing within 45 days after the date of filing of such foreign or international application as provided by 35 U.S.C. § 122(b)(2)(B)(iii) and 37 CFR 1.213(c) is accepted as having been unintentionally delayed.

A change of correspondence address signed by Edward C. Kwok, petitioner herein, was submitted concurrently with the instant petition. There is, however, no indication that Mr. Kwok was ever given a power of attorney or authorization of agent to prosecute the above-identified application. If Mr. Kwok desires to receive future correspondence regarding this application, the appropriate power of attorney or authorization of agent must be submitted. While a courtesy copy of this decision is being mailed to Mr. Kwok, all future correspondence will be directed to the address currently of record until such time as appropriate instructions are received to the contrary.

Any inquiries concerning this decision may be directed to the undersigned at (703) 305-8680.

This application is being forwarded to Technology Center Art Unit 2631 for examination in due course.

Frances Hicks

Frances Hicks
Petitions Examiner
Office of Petitions
Office of the Deputy Commissioner
for Patent Examination Policy

cc:

MacPherson Kwok Chen & Heid LLP
2001 Gateway Place, Suite 195E
San Jose, CA 95110

UNITED STATES PATENT AND TRADEMARK OFFICE

Commissioner for Patents
United States Patent and Trademark Office
P.O. Box 1450
Alexandria, VA 22313-1450
www.uspto.gov

DIGIMARC CORPORATION
9405 SW GEMINI DRIVE
BEAVERTON, OR 97008

COPY MAILED

APR 26 2007

OFFICE OF PETITIONS

In re Application of	:
William Y. Conwell et al	:
Application No. 09/888,339	: DECISION GRANTING PETITION
Filed: June 21, 2001	: UNDER 37 CFR 1.313(c)(2)
Attorney Docket No. P0379	:

This is a decision on the petition, filed April 24, 2007, under 37 CFR 1.313(c)(2) to withdraw the above-identified application from issue after payment of the issue fee.

The petition is **GRANTED**.

The above-identified application is withdrawn from issue for consideration of a submission under 37 CFR 1.114 (request for continued examination). See 37 CFR 1.313(c)(2).

Petitioner is advised that the issue fee paid on March 15, 2007 in the above-identified application cannot be refunded. If, however, the above-identified application is again allowed, petitioner may request that it be applied towards the issue fee required by the new Notice of Allowance.[1]

Telephone inquiries should be directed to the undersigned at (571) 272-3218.

This matter is being referred to Technology Center AU 2135 for processing of the request for continued examination under 37 CFR 1.114 and for consideration of the Information Disclosure Statement.

Frances Hicks
Petitions Examiner
Office of Petitions

C:\Documents and Settings\fhicks\My Documents\470\Apr10\888339.wpd

---

[1] *The request to apply the issue fee to the new Notice may be satisfied by completing and returning the new Part B – Fee(s) Transmittal Form (along with any balance due at the time of submission). Petitioner is advised that the Issue Fee Transmittal Form* ***must*** *be completed and timely submitted to avoid abandonment.*

UNITED STATES PATENT AND TRADEMARK OFFICE

Commissioner for Patents
United States Patent and Trademark Office
P.O. Box 1450
Alexandria, VA 22313-1450
www.uspto.gov

MINTZ, LEVIN, COHN, FERRIS,
GLOVSKY AND POPEO, P.C
ONE FINANCIAL CENTER
BOSTON, MA 02111

COPY MAILED

NOV 19 2009

OFFICE OF PETITIONS

In re Application of	:	
Platner, et al.	:	
Application No. 09/888,345	:	ON APPLICATION FOR
Filed: June 22, 2001	:	PATENT TERM ADJUSTMENT
Atty Docket No. 36353-501	:	

This is in response to the "REQUEST FOR RECONSIDERATION PATENT TERM ADJUSTMENT UNDER 37 C.F.R. § 1.705(b)" filed August 5, 2009. Applicants submits that the patent term adjustment to be indicated on the patent is seven hundred forty-two (742) days, not four hundred ninety-two (492) days as calculated by the Office as of the mailing of the initial determination of patent term adjustment. Applicants request this correction solely on the basis that the Office will take in excess of three years to issue this patent.

As the instant application for patent term adjustment requests reconsideration of the patent term adjustment as it relates to the Office's failure to issue the patent within 3 years of the filing date, the application for patent term adjustment under 37 CFR 1.705(b) is **DISMISSED as PREMATURE**.

Knowledge of the actual date the patent issues is required to calculate the amount, if any, of additional patent term patentee is entitled to for Office failure to issue the patent within 3 years. See § 1.702(b). (This is true even where a request for continued examination (RCE) was filed). The computer will not undertake the § 1.702(b) calculation until the actual date of issuance of the patent has been determined. Likewise, the computer will not calculate any further Office delay under § 1.702(a)(4) or applicant delay under § 1.704(c)(10) until the actual date of issuance of the patent has been determined. As such, the Office can not make a determination on the correctness of the patent term adjustment until the patent has issued.

Requesting reconsideration of the patent term adjustment to be indicated on the patent under 37 CFR 1.705(b) based on the initial determination of patent term adjustment and a projected issuance date of the patent (or even the filing date of the request for continued examination) is premature. Accordingly, it is appropriate to dismiss as premature such a request.

Rather than file an application for patent term adjustment under 37 CFR 1.705(b) contesting the 37 CFR 1.702(b) calculation at the time of the mailing of the notice of allowance, applicant is advised that they may wait until the time of the issuance of the patent and file a request for reconsideration of the patent term adjustment pursuant to 37 CFR 1.705(d). As the USPTO does not calculate the amount of time earned pursuant to 37 CFR 1.702(b) until the time of the issuance of the patent, the Office will consider any request for reconsideration of the patent term adjustment due to an error in the calculation of 37 CFR 1.702(b) to be timely if the request for reconsideration is filed within two months of the issuance of the patent. However, as to all other bases for contesting the initial determination of patent term adjustment received with the notice of allowance, applicant must timely file an application for patent term adjustment prior to the payment of the issue fee[1].

It is noted that any period of adjustment will be entered in light of 35 U.S.C. 154(B) GUARANTEE OF NO MORE THAN 3-YEAR APPLICATION PENDENCY, which provides that:

> Subject to the limitations under paragraph (2), if the issue of an original patent is delayed due to the failure of the United States Patent and Trademark Office to issue a patent within 3 years after the actual filing date of the application in the United States, not including —

---

[1] For example, if applicant disputes both the calculation of patent term adjustment under 37 CFR 1.702(a)(1) for Office failure to mail a first Office action or notice of allowance not later than fourteen months after the date on which the application was filed and under 37 CFR 1.702(b) for Office failure to issue a patent within three years of the actual filing date of the application, then applicant must still timely file an application for patent term adjustment prior to the payment of the issue fee to contest the calculation of Office delay in issuing a first Office action or notice of allowance. See 37 CFR 1.705(b) and 35 U.S.C. 154(b)(3)(B). A dispute as to the calculation of the §1.702(a)(1) period raised on request for reconsideration of patent term adjustment under 37 CFR 1.705(d) will be dismissed as untimely filed.

(i) any time consumed by continued examination of the application requested by the applicant under section 132(b);

It is further noted that a Request for Continued Examination (RCE) was first filed in this application on April 19, 2005.

The Office acknowledges submission of the $200.00 fee set forth in 37 CFR 1.18(e) for consideration of the application for patent term adjustment under 37 CFR 1.705(b).

Any request for reconsideration of the patent term adjustment indicated on the patent must be timely filed within 2 months after issuance pursuant to 37 CFR 1.705(d) and must include payment of the required fee under 37 CFR 1.18(e).

The Office of Data Management has been advised of this decision. This application is being referred to the Office of Data Management for issuance of the patent.

Telephone inquiries specific to this decision should be directed to Kenya A. McLaughlin, Petitions Attorney, at (571) 272-3222.

C. T. Donnell

Christina Tartera Donnell
Senior Petitions Attorney
Office of Petitions

UNITED STATES PATENT AND TRADEMARK OFFICE

Commissioner for Patents
United States Patent and Trademark Office
P.O. Box 1450
Alexandria, VA 22313-1450
www.uspto.gov

MINTZ, LEVIN, COHN, FERRIS,
GLOVSKY AND POPEO, P.C
ONE FINANCIAL CENTER
BOSTON MA 02111

MAILED
APR 12 2010
OFFICE OF PETITIONS

In re Patent No. 7,647,244	: DECISION ON REQUEST
Platner, et al.	: FOR
Issue Date: January 12, 2010	: RECONSIDERATION OF
Application No. 09/888,345	: PATENT TERM ADJUSTMENT
Filed: June 22, 2001	: and
Atty Docket No.36353-501	: NOTICE OF INTENT TO ISSUE
	: CERTIFICATE OF CORRECTION

This is a decision on the petition filed on March 12, 2010, which is being treated as a petition under 37 CFR 1.705(d) requesting that the patent term adjustment indicated on the above-identified patent be corrected to indicate that the term of the above-identified patent is extended or adjusted by seven hundred sixty-seven (767) days.

The petition to correct the patent term adjustment indicated on the above-identified patent to indicate that the term of the above-identified patent is extended or adjusted by seven hundred and sixty-seven (767) days is **GRANTED**.

The Office acknowledges receipt of $200.00 for the fee set forth in 37 CFR 1.18(e). No additional fees are required.

The application is being forwarded to the Certificates of Corrections Branch for issuance of a certificate of correction. The Office will issue a certificate of correction indicating that the term of the above-identified patent is extended or adjusted by seven hundred sixty-seven (767) days days.

Telephone inquiries specific to this matter should be directed to the undersigned at (571) 272-3222.

Kenya A. McLaughlin
Petitions Attorney
Office of Petitions

Enclosure: Copy of DRAFT Certificate of Correction

DRAFT COPY

UNITED STATES PATENT AND TRADEMARK OFFICE

CERTIFICATE OF CORRECTION

PATENT : 7,647,244 B2

DATED : Jan. 12, 2010

INVENTOR(S) : Platner, et al.

It is certified that error appears in the above-identified patent and that said Letters Patent is hereby corrected as shown below:

On the cover page,

[*] Notice: Subject to any disclaimer, the term of this patent is extended or adjusted under 35 USC 154(b) by (517) days

Delete the phrase "by 517 days" and insert – by 767 days--

UNITED STATES PATENT AND TRADEMARK OFFICE

COMMISSIONER FOR PATENTS
UNITED STATES PATENT AND TRADEMARK OFFICE
WASHINGTON, D.C. 20231
www.uspto.gov

Paper No. 8

SWERNOFSKY LAW GROUP
P.O. BOX 390013
MOUNTAIN VIEW, CA 94039-0013

COPY MAILED

APR 1 2 2002

OFFICE OF PETITIONS

In re Application of	:	
Stephane Kasriel et al	:	
Application No. 09/888,374	:	NOTICE
Filed: June 22, 2001	:	
Attorney Docket No. 155.1005.01	:	

This is a notice regarding your request for acceptance of a fee deficiency submission under 37 CFR 1.28. On September 1, 1998, the Court of Appeals for the Federal Circuit held that 37 CFR 1.28(c) is the sole provision governing the time for correction of the erroneous payment of the issue fee as a small entity. **See DH Technology v. Synergystex International, Inc. 154 F.3d 1333, 47 USPQ2d 1865 (Fed. Cir. Sept. 1, 1998).**

The Office no longer investigates or rejects original or reissue applications under 37 CFR 1.56. **1098 Off. Gaz. Pat. Office 502 (January 3, 1989).** Therefore, nothing in this Notice is intended to imply that an investigation was done.

Your fee deficiency submission under 37 CFR 1.28 is hereby **ACCEPTED**.

Inquiries related to this communication should be directed to the Office of Petitions Staff at (703) 305-9285.

This file is being forwarded to Technology Center AU 2154.

Wan Laymon
Petitions Examiner
Office of Petitions
Office of the Deputy Commissioner
for Patent Examination Policy

UNITED STATES PATENT AND TRADEMARK OFFICE

Commissioner for Patents
United States Patent and Trademark Office
P.O. Box 1450
Alexandria, VA 22313-1450
www.uspto.gov

COPY MAILED

MAY 09 2008

NORTH OAKS PATENT AGENCY
45 ISLAND ROAD
NORTH OAKS MN 55127

In re	:	
Patent No. 7,185,063	:	DECISION ON PETITION
Issued: February 27, 2007	:	
Application No. 09/888,374	:	
Filed: June 22, 2001	:	

This is a decision on the "Petition Under 37 C.F.R. 1.182 Requesting Duplicate Letters Patent", filed August 20, 2007.

The petition under 37 CFR 1.182 is **GRANTED**.

The Publishing Division is directed to issue a duplicate Letters Patent.

Any questions concerning this decision may be directed to the undersigned at (571)272-3207. Any questions concerning issuance of the duplicate Letters Patent should be directed to Niomi Farmer at (703)308-9250, extension 129.

A copy of this decision is being forwarded to the Publishing Division for issuance of a duplicate Letters patent.

Telephone inquiries concerning this decision may be directed to the undersigned at (571)272-3207.

Cliff Congo
Petitions Attorney
Office of Petitions

cc: Niomi Farmer, P/OPPD (FAX 571-270-9937)

UNITED STATES PATENT AND TRADEMARK OFFICE

Commissioner for Patents
United States Patent and Trademark Office
P.O. Box 1450
Alexandria, VA 22313-1450
www.uspto.gov
DIW Apr-05

ERICSSON INC.
6300 LEGACY DRIVE
M/S EVR C11
PLANO TX 75024

COPY MAILED

APR 19 2005

OFFICE OF PETITIONS

In re Application of	:	
Magnus Gannholm	:	DECISION ON PETITION
Application No. 09/888,384	:	
Filed: 26 June, 2001	:	
Atty Docket No. 06000-115	:	

This is in reply to Petitioner's "Petition Under 37 CFR 1.182," filed on 27 January, 2005, which is treated as a petition under 37 CFR 1.181 requesting that the application be treated as if it had not been filed with a "Nonpublication Request" on filing. This is being treated as a request to rescind the "Nonpublication Request" in the Office's electronic records.

The petition is Granted.

Petitioner requests that the application be published and argues that the application should be treated as if a "Nonpublication Request" was never filed, since a "Nonpublication Request" form was not included with the application on filing. Petitioner argues that the box on the Transmittal letter signed by Petitioner's representative for "Nonpublication Request Under 35 U.S.C. 122(b)(2)(B)(i)," was not checked and that therefore nonpublication was never requested.

On 26 June, 2001, the above-identified application with a Transmittal letter by Petitioner's representative was filed in the United States Patent and Trademark Office (Office). The box for "Nonpublication Request Under 35 U.S.C. 122(b)(2)(B)(i)" was not checked on the transmittal letter signed by Petitioner's representative. The above-identified application would have been eligible for publication on 26 December, 2002.

On 17 August, 2001, a Filing Receipt was mailed by the Office acknowledging a "Nonpublication Request".

On 9 November, 2001, a second Filing Receipt was mailed, also indicating the filing of a "Nonpublication Request".

On 27 January, 2005, over three (3) years after the Filing Receipt acknowledging the nonpublication request would have been received by applicant and after the application should have been published, Petitioner filed the instant petition requesting that the application be treated as if a "Nonpublication Request" had not been made on filing.

35 U.S.C. 122(b) requires the United States Patent and Trademark Office to publish utility and plant applications filed on or after November 29, 2000, unless, on filing, applicant requested nonpublication with the required certification. The statute also provides that if an applicant who has submitted a nonpublication request subsequently files an application directed to the invention disclosed in the application in which the nonpublication request was submitted in another country, or under a multilateral international agreement, that requires publication of applications eighteen months after filing, the applicant must notify the Office of such filing within forty-five days after the date of the filing of the foreign or international application. The failure to notify the Office of the filing of such foreign or international application shall result in abandonment of the application in which the nonpublication request was submitted.

Since a proper Nonpublication Request under 35 U.S.C. 122(b) was not received on filing, as the required statutory language was not included, the application will be treated as if the Nonpublication Request had not been made.

Petitioner's counsel states that the "nonpublication request" on the filing receipt mailed on 17 August, 2001 "was not noticed by Applicant." Petitioner does not address the Filing Receipt mailed on 9 November, 2001, however, the Office is construing the petition to mean that petitioner also failed to notice on the second Filing Receipt that nonpublication had been requested.

In the future, Applicant's representatives should carefully review filing receipts and timely advise the Office of any errors. A delay in publication, as caused by the delay in notifying the Office of the erroneous reference to a nonpublication request, could cause applicants to lose provisional rights under 35 U.S.C. 154(d).

The application will be published in due course.

Telephone inquiries regarding this communication should be directed to the undersigned at (571)272-3231.

Douglas I. Wood
Senior Petitions Attorney
Office of Petitions

UNITED STATES PATENT AND TRADEMARK OFFICE

COMMISSIONER FOR PATENTS
UNITED STATES PATENT AND TRADEMARK OFFICE
P.O. BOX 1450
ALEXANDRIA, VA 22313-1450
WWW.USPTO.GOV

Paper No. 12

ROTHWELL, FIGG, ERNST & MANBECK, P.C.
1425 K STREET, N.W.
SUITE 800
WASHINGTON DC 20005

COPY MAILED

APR 22 2005

OFFICE OF PETITIONS

In re Application of
Boyd R. Eifling et al.
Application No. 09/888,410
Filed: June 26, 2001
Attorney Docket No.: N1416-001
Title: CELLULOSE ABSORBENT

DECISION ON PETITION
UNDER 37 C.F.R. §1.137(b)

This is a decision on the petition filed September 17, 2004, pursuant to 37 C.F.R. §1.137(b)[1], to revive the above-identified application.

The above-identified application became abandoned for failure to submit corrected drawings in a timely manner in reply to the Notice of Allowance and Issue Fee Due, mailed March 22, 2004, which set a shortened statutory period for reply of three (3) months. No extensions of time are permitted for transmitting formal drawings[2]. Accordingly, the above-identified application became abandoned on June 23, 2004. A Notice of Abandonment was mailed on August 18, 2004.

With this petition, petitioner submitted the petition fee, corrected drawings, and the proper statement of unintentional delay.

The instant petition is not grantable because requirement (1) has not been satisfied. The requirement has not been satisfied because Petitioner did not submit the required reply to the Office action. The required reply is the reply sufficient to have avoided abandonment, had such reply been timely filed[3]. In order for the application to be revived, petitioner must submit a reply which satisfies 37 C.F.R. §1.137(b)(1).

---

1 A grantable petition pursuant to 37 CFR 1.137(b) must be accompanied by:
(1) The reply required to the outstanding Office action or notice, unless previously filed;
(2) The petition fee as set forth in § 1.17(m);
(3) A statement that the entire delay in filing the required reply from the due date for the reply until the filing of a grantable petition pursuant to this paragraph was unintentional. The Commissioner may require additional information where there is a question whether the delay was unintentional, and;
(4) Any terminal disclaimer (and fee as set forth in § 1.20(d)) required pursuant to paragraph (d) of this section.

2 See MPEP §710.02(e).

3 See M.P.E.P. 711.03(c).

The corrected drawings which were filed along with this petition have been reviewed by a Draftperson, and have been deemed to be unacceptable. A copy of the Notice of Draftperson's Patent Drawing Review has been enclosed.

For this reason, this petition under 37 C.F.R. §1.137(b) is **DISMISSED**.

On renewed petition, petitioner should submit corrected drawings which comply with the Notice of Draftperson's Patent Drawing Review.

Any request for reconsideration of this decision must be submitted within **TWO (2) MONTHS** from the mail date of this decision. Extensions of time under 37 CFR 1.136(a) are permitted. The reconsideration request should include a cover letter entitled "Renewed Petition under 37 CFR 1.137(b)."

The renewed petition should indicate in a prominent manner that the attorney handling this matter is Paul Shanoski.

To help assure prompt and proper attention to your response, please see Request for Alert Concerning Submitted Petitions, 1282 Official Gazette (May 18, 2004) for further information on how to assist the Office in delivering your submission to the correct location. The Petitioner may wish to consider telephoning the undersigned one month after the submission is made to confirm that the documents were properly delivered.

Any renewed petition may be submitted by mail[4], hand-delivery[5], or facsimile[6].

The application file will be retained in the Office of Petitions for two (2) months.

The general phone number for the Office of Petitions which should be used for status requests is (571) 272-3282. Telephone inquiries regarding *this decision* should be directed to the undersigned at (571) 272-3225.

Paul Shanoski
Senior Attorney
Office of Petitions
United States Patent and Trademark Office

Encl. Notice of Draftperson's Patent Drawing Review

---

4 Mail Stop Petition, Commissioner for Patents, United States Patent and Trademark Office, P.O. Box 1450, Alexandria, VA, 22313-1450.

5 Customer Window, Randolph Building, 401 Dulaney Street, Alexandria, VA, 22314.

6 (703) 872-9306 - please note this is a central facsimile number, and as such, there will be a delay in the delivery of the facsimile to the undersigned, which could be as much as one month.

UNITED STATES PATENT AND TRADEMARK OFFICE

COMMISSIONER FOR PATENTS
UNITED STATES PATENT AND TRADEMARK OFFICE
P.O. BOX 1450
ALEXANDRIA, VA 22313-1450
WWW.USPTO.GOV

Paper No. None

ROTHWELL, FIGG, ERNST & MANBECK, P.C.
1425 K STREET, N.W.
SUITE 800
WASHINGTON DC 20005

COPY MAILED

JUN 06 2005

OFFICE OF PETITIONS

In re Application of
Boyd R. Eifling et al.
Application No. 09/888,410
Filed: June 26, 2001
Attorney Docket No.: N1416-001
Title: CELLULOSE ABSORBENT

DECISION ON RENEWED PETITION
UNDER 37 C.F.R. §1.137(b)

This is a decision on the renewed petition filed May 25, 2005, pursuant to 37 C.F.R. §1.137(b)[1], to revive the above-identified application.

The above-identified application became abandoned for failure to submit corrected drawings in a timely manner in reply to the Notice of Allowance and Issue Fee Due, mailed March 22, 2004, which set a shortened statutory period for reply of three (3) months. No extensions of time are permitted for transmitting formal drawings[2]. Accordingly, the above-identified application became abandoned on June 23, 2004. A Notice of Abandonment was mailed on August 18, 2004.

The original petition was submitted on September 17, 2004, and was dismissed via the mailing of a decision on April 22, 2005, for failure to submit corrected drawings which were acceptable.

With the renewed petition, acceptable corrected drawings have been submitted.

The renewed petition is **GRANTED**.

---

1 A grantable petition pursuant to 37 CFR 1.137(b) must be accompanied by:
(1) The reply required to the outstanding Office action or notice, unless previously filed;
(2) The petition fee as set forth in § 1.17(m);
(3) A statement that the entire delay in filing the required reply from the due date for the reply until the filing of a grantable petition pursuant to this paragraph was unintentional. The Commissioner may require additional information where there is a question whether the delay was unintentional, and;
(4) Any terminal disclaimer (and fee as set forth in § 1.20(d)) required pursuant to paragraph (d) of this section.

2 See MPEP §710.02(e).

The general phone number for the Office of Petitions which should be used for status requests is (571) 272-3282. Telephone inquiries regarding *this decision* should be directed to the undersigned at (571) 272-3225.

Paul Shanoski
Senior Attorney
Office of Petitions
United States Patent and Trademark Office

Encl. Corrected Drawing and form PTO-948

UNITED STATES PATENT AND TRADEMARK OFFICE

COMMISSIONER FOR PATENTS
UNITED STATES PATENT AND TRADEMARK OFFICE
WASHINGTON, DC 20231
www.uspto.gov

MAILED

DEC 27 2001

DIRECTOR'S OFFICE
TECHNOLOGY CENTER 2100

Paper No. 4

William T. Ellis
FOLEY & LARDNER
Washington Harbour
3000 K Street, N.W., Suite 500
Washington DC 20007-5109

In re Application of : M. Landesmann
Application No. 09/888,439
Filed: June 26, 2001
For: BUYER-DRIVEN TARGETING OF PURCHASING ENTITIES

DECISION ON PETITION TO MAKE SPECIAL

This is a decision on the petition, filed September 24, 2001, to make the above-identified application special under 37 C.F.R. §102(d) and M.P.E.P. § 708.02(VIII): Accelerated Examination.

M.P.E.P. §708.02, Section VIII which sets out the prerequisites for a grantable petition for Accelerated Examination under 37 C.F.R. § 102(d) states in relevant part:

A new application (one which has not received any examination by the examiner) may be granted special status provided that applicant (and this term includes applicant's attorney or agent) complies with each of the following items:

(A) Submits a petition to make special accompanied by the fee set forth in 37 CFR 1.17(h);
(B) Presents all claims directed to a single invention, or if the Office determines that all the claims presented are not obviously directed to a single invention, will make an election without traverse as a prerequisite to the grant of special status...;
(C) Submits a statement(s) that a pre-examination search was made, listing the field of search by class and subclass, publication, Chemical Abstracts, foreign patents, etc. A search made by a foreign patent office satisfies this requirement;
(D) Submits one copy each of the references deemed most closely related to the subject matter encompassed by the claims if said references are not already of record; and
(E) Submits a detailed discussion of the references, which discussion points out, with the particularity required by 37 CFR 1.111 (b) and (c), how the claimed subject matter is patentable over the references.

In those instances where the request for this special status does not meet all the prerequisites set forth above, applicant will be notified and the defects in the request will be stated. The application will remain in the status of a new application awaiting action in its regular turn. In those instances where a request is defective in one or more respects, applicant will be given one opportunity to perfect the request in a renewed petition to make special. If perfected, the request will then be granted. If not perfected in the first renewed petition, any additional renewed petitions to make special may or may not be considered at the discretion of the Group Special Program Examiner.

Applicant's submission is deficient in that it does not clearly comply with (B) and (E) above. With respect to (B), it is stated that applicant will make an election without traverse "in response to an Examiner's telephone request". M.P.E.P. §708.02, Section VIII indicates that established telephone restriction practice will be followed. According to §812.01, established telephone restriction practice does not require that all restrictions be made by telephone and thus applicant's offer to elect without traverse upon a "telephone" request is too limiting. With respect to (E), while applicant asserts that the references do not teach obtaining third party proof of purchase records and do not teach obtaining them from the buyer entity, these features are not required by all of the claims presented. See claim 88 for example. As a result, the detailed discussion of the references does not point out how the claims of different scope are patentable over the references.

Accordingly, the Petition is DENIED. The application file is being forwarded to Central Files to await examination in its proper turn based on its effective filing date.

Any request for reconsideration must be filed within two months of the mailing date of this decision.

Robert A. Weinhardt
Special Program Examiner
Technology Center 2100
Computer Architecture, Software,
& Electronic Commerce
703-305-9780

UNITED STATES PATENT AND TRADEMARK OFFICE

COMMISSIONER FOR PATENTS
UNITED STATES PATENT AND TRADEMARK OFFICE
WASHINGTON, DC 20231
www.uspto.gov

MAILED

MAY 01 2002

DIRECTOR'S OFFICE
TECHNOLOGY CENTER 2100

Paper No. 8

William T. Ellis
FOLEY & LARDNER
Washington Harbour
3000 K Street, N.W., Suite 500
Washington DC 20007-5109

In re Application of : M. Landesmann
Application No. 09/888,439
Filed: June 26, 2001
For: BUYER-DRIVEN TARGETING OF PURCHASING ENTITIES

DECISION ON PETITION TO MAKE SPECIAL

This is a decision on the petition, filed March 5, 2002, to make the above-identified application special under 37 C.F.R. §102(d) and M.P.E.P. § 708.02(VIII): Accelerated Examination.

M.P.E.P. §708.02, Section VIII which sets out the prerequisites for a grantable petition for Accelerated Examination under 37 C.F.R. § 102(d) states in relevant part:

A new application (one which has not received any examination by the examiner) may be granted special status provided that applicant (and this term includes applicant's attorney or agent) complies with each of the following items:

(A) Submits a petition to make special accompanied by the fee set forth in 37 CFR 1.17(h);
(B) Presents all claims directed to a single invention, or if the Office determines that all the claims presented are not obviously directed to a single invention, will make an election without traverse as a prerequisite to the grant of special status...;
(C) Submits a statement(s) that a pre-examination search was made, listing the field of search by class and subclass, publication, Chemical Abstracts, foreign patents, etc. A search made by a foreign patent office satisfies this requirement;
(D) Submits one copy each of the references deemed most closely related to the subject matter encompassed by the claims if said references are not already of record; and
(E) Submits a detailed discussion of the references, which discussion points out, with the particularity required by 37 CFR 1.111 (b) and (c), how the claimed subject matter is patentable over the references.

In those instances where the request for this special status does not meet all the prerequisites set forth above, applicant will be notified and the defects in the request will be stated. The application will remain in the status of a new application awaiting action in its regular turn. In those instances where a request is defective in one or more respects, applicant will be given one opportunity to perfect the request in a renewed petition to make special. If perfected, the request will then be granted. If not perfected in the first renewed petition, any additional renewed petitions to make special may or may not be considered at the discretion of the Group Special Program Examiner.

In light of the preliminary amendment filed with this petition, applicant's submission of March 5, 2002 meets all the criteria set forth above and the petition is **GRANTED**.

The application file is being forwarded to the Examiner for accelerated examination in accordance with M.P.E.P. §708.02. If the application is subsequently allowed, it will be given priority for printing. See M.P.E.P. §1309.

Robert A. Weinhardt
Special Program Examiner
Technology Center 2100
Computer Architecture, Software,
& Electronic Commerce
703-305-9780

UNITED STATES PATENT AND TRADEMARK OFFICE

Commissioner for Patents
United States Patent and Trademark Office
P.O. Box 1450
Alexandria, VA 22313-1450
www.uspto.gov

GREGORY L BRADLEY
MEDRAD INC
ONE MEDRAD DRIVE
INDIANOLA PA 15051

COPY MAILED

OCT 2 2 2008

OFFICE OF PETITIONS

In re Patent No. 6,676,637 :
Issue Date: January 13, 2004 :
Application No. 09/888,454 : ON PETITION
Filed: June 25, 2001 :
Attorney Docket No. **PS/08-019.D.CIP2** :

This is a decision on the petition, filed July 15, 2008, under 37 CFR 1.137(b) to revive the instant nonprovisional application for failure to timely notify the U.S. Patent and Trademark (USPTO) of the filing of an application in a foreign country, or under a multinational treaty that requires publication of applications eighteen months after filing. *See* 37 CFR 1.137(f).

The petition is **DISMISSED**.

Any request for reconsideration of this decision must be submitted within TWO (2) MONTHS from the mail date of this decision. Extensions of time under 37 CFR 1.136(a) are permitted. The reconsideration request should include a cover letter entitled "Renewed Petition under 37 CFR 1.137(b)." This is **not** final agency action within the meaning of 5 U.S.C. § 704. No additional petition fee is required.

Petitioner states that the instant non-provisional application is the subject of an application filed in a foreign country and the U. S. Patent and Trademark Office was unintentionally not notified of this filing within 45 days subsequent to the filing of the subject application in a foreign country. While the petition seeks revival and a request to rescind the nonpublication request filed June 25, 2001, the petition filed is not acceptable as it is not signed in compliance with 37 CFR 1.4 and therefore cannot be treated on its merits and will not receive any consideration until such time as a signed petition has been submitted.

Further correspondence with respect to this matter should be addressed as follows:

By mail: Mail Stop PETITION
Commissioner for Patents
Post Office Box 1450

Alexandria, VA 22313-1450

By Fax: (571) 273-8300
ATTN: Office of Petitions

Telephone inquiries related to this decision should be directed to the undersigned Petitions Attorney at (571) 272-3212.

Patricia Faison-Ball

Patricia Faison-Ball
Senior Petitions Attorney
Office of Petitions

UNITED STATES PATENT AND TRADEMARK OFFICE

Commissioner for Patents
United States Patent and Trademark Office
P.O. Box 1450
Alexandria, VA 22313-1450
www.uspto.gov

GREGORY L BRADLEY
MEDRAD INC
ONE MEDRAD DRIVE
INDIANOLA PA 15051

COPY MAILED

OCT 2 2 2008

OFFICE OF PETITIONS

In re Patent No. 6,755,803 :
Issue Date: June 29, 2004 :
Application No. 09/888,455 : ON PETITION
Filed: June 25, 2001 :
Attorney Docket No. **PS/08-019.D.CIP1** :

This is a decision on the petition, filed July 15, 2008 under 37 CFR 1.137(b) to accept an unintentionally delayed notification to the U.S. Patent and Trademark Office (USPTO) of the filing of an application in a foreign country or under a multinational treaty that requires publication of applications eighteen-months after filing. *See* 37 CFR 1.137(f).

The petition is **DISMISSED**.

Any request for reconsideration of this decision must be submitted within TWO (2) MONTHS from the mail date of this decision. Extensions of time under 37 CFR 1.136(a) are permitted. The reconsideration request should include a cover letter entitled "Renewed Petition under 37 CFR 1.137(b)." This is **not** final agency action within the meaning of 5 U.S.C. § 704. No additional petition fee is required.

Petitioner states that the instant non-provisional application is the subject of an application filed in a foreign country and the U. S. Patent and Trademark Office was unintentionally not notified of this filing within 45 days subsequent to the filing of the subject application in a foreign country. While the petition seeks revival and a request to rescind the nonpublication request filed June 25, 2001, the petition filed is not acceptable as it is not signed in compliance with 37 CFR 1.4 and therefore cannot be treated on its merits and will not receive any consideration until such time as a signed petition has been submitted.

Further correspondence with respect to this matter should be addressed as follows:

By mail: Mail Stop PETITION
Commissioner for Patents
Post Office Box 1450
Alexandria, VA 22313-1450

By Fax: (571) 273-8300
ATTN: Office of Petitions

Telephone inquiries related to this decision should be directed to the undersigned Petitions Attorney at (571) 272-3212.

Patricia Faison-Ball

Patricia Faison-Ball
Senior Petitions Attorney
Office of Petitions

UNITED STATES PATENT AND TRADEMARK OFFICE

Commissioner for Patents
United States Patent and Trademark Office
P.O. Box 1450
Alexandria, VA 22313-1450
www.uspto.gov

ROSENBERG, KLEIN & LEE
3458 ELLICOTT CENTER DRIVE-SUITE 101
ELLICOTT CITY, MD 21043

COPY MAILED
SEP 25 2006
OFFICE OF PETITIONS

In re Application of	:	
Kuan-Lin Peng	:	
Application No. 09/888,488	:	ON PETITION
Filed: June 26, 2001	:	
Attorney Docket No. MR2349-657	:	
	:	

This is a decision on the petition under 37 CFR 1.137(b), filed on June 28, 2006, to revive the above-identified application.

The application became abandoned for failure to respond to the non-final Office action mailed November 24, 2004. A Notice of Abandonment was mailed on July 1, 2005.

The petition satisfies the requirements of 37 CFR 1.137(b) in that petitioner has supplied (1) the reply in the form of an amendment; (2) the petition fee of $750; and (3) an adequate statement of unintentional delay. Therefore, the petition is **GRANTED**.

While the assignee attempted to intervene in the above-identified application, the Revocation of Power of Attorney and Appointment of New Power of Attorney filed on June 28, 2006 does not comply with the requirements of 37 CFR 3.73(b), in that, the document failed to contain the reel and frame number of the assignment recorded in the USPTO. Therefore, in order for the Revocation of Power of Attorney and Appointment of New Power of Attorney to be acceptable, compliance with 37 CFR 3.73(b) must be satisfied. It is recommended that the assignee use the form found on the USPTO.gov website (Form No. PTO/SB/96).

A courtesy copy of this decision is being mailed to the inventor using the address listed on the instant petition.

The application file is being referred to Technology Center Art Unit 2642, for review of the amendment filed with the instant petition.

Telephone inquiries concerning this decision should be directed to the undersigned at (571) 272-3226.

Andrea Smith
Petitions Examiner
Office of Petitions

cc: Kuan-Lin Peng
6F, No. 10, Lane 32 Chang Hsin St.
Wenshan District, Taipei
TAIWAN, R.O.C.

UNITED STATES PATENT AND TRADEMARK OFFICE

Commissioner for Patents
United States Patent and Trademark Office
P.O. Box 1450
Alexandria, VA 22313-1450
www.uspto.gov

NIXON & VANDERHYE, PC
901 NORTH GLEBE ROAD, 22TH FLOOR
ARLINGTON VA 33303

MAILED

JAN 29 2009

OFFICE OF PETITIONS

In re Application of
Tony Mastronardi
Application No. 09/888,540
Filed: June 26, 2001
Attorney Docket No. 871-102

DECISION ON PETITION

This is a decision on the petition under the unintentional provisions of 37 CFR 1.137(b), filed December 12, 2008, to revive the above-identified application.

The petition is **GRANTED**.

The petition satisfies the conditions for revival pursuant to the provisions of 37 CFR 1.137(b) in that (1) the reply in the form of replacement drawings; (2) the petition fee; and (3) the required statement of unintentional delay have been received. Accordingly, the reply to the Notice of Allowance/Notice of Allowability mailed August 11, 2008, is accepted as having been unintentionally delayed.

Telephone inquiries concerning this decision should be directed to the undersigned at (571) 272-3208.

This application is being referred to the Office of Data Management to be processed into a patent and to oversee the drawings received on December 12, 2008.

Karen Creasy

Karen Creasy
Petitions Examiner
Office of Petitions

UNITED STATES PATENT AND TRADEMARK OFFICE

Commissioner for Patents
United States Patent and Trademark Office
P.O. Box 1450
Alexandria, VA 22313-1450
www.uspto.gov

Steven M. Senn
18336 Aurora Ave N
Suite 112-421
Shoreline WA 98133

COPY MAILED
AUG 07 2008

In re Application of :
Steven M. Senn :
Application No. 09/888,554 : DECISION ON PETITION
Filed: June 26, 2001 :
Title: Retail Customer and :
Product Purchase Divider with
Interactive Retail Transaction
Functions

This is a decision on the petition under the unintentional provisions of 37 CFR 1.137(b), filed June 18, 2008, to revive the above-identified application.

The petition is **DISMISSED**.

Any request for reconsideration of this decision must be submitted within TWO (2) MONTHS from the mail date of this decision. Extensions of time under 37 CFR 1.136(a) are permitted. The reconsideration request should include a cover letter entitled "Renewed Petition under 37 CFR 1.137(b)." This is **not** a final agency action within the meaning of 5 U.S.C. § 704.

This above-identified application became abandoned for failure to timely file a reply to a non-final Office Action mailed October 3, 2003. The non-final Office Action set a three (3) month shortened statutory period for reply. No extensions of time were obtained under the provisions of 37 CFR 1.136(a). Accordingly, this application became abandoned on January 4, 2004. A Notice of Abandonment was mailed on May 5, 2004.

Petitioner states that he did not receive the October 3, 2003 non-final Office action and the Notice of Abandonment because he no longer received mail at the correspondence address of record. Petitioner states he unintentionally failed to submit a change of address with the Office.

A grantable petition under 37 CFR 1.137(b) must be accompanied by: (1) the required reply, unless previously filed; (2) the

petition fee as set forth in 37 CFR 1.17(m); (3) a statement that the entire delay in filing the required reply from the due date for the reply until the filing of a grantable petition pursuant to 37 CFR 1.137(b) was unintentional; and (4) any terminal disclaimer (and fee as set forth in 37 CFR 1.20(d)) required by 37 CFR 1.137(d). Where there is a question as to whether either the abandonment or the delay in filing a petition under 37 CFR 1.137 was unintentional, the Director may require additional information. *See* MPEP 711.03(c)(II)(C) and (D). The instant petition lacks item (1) and (3).

As to item (1) petitioner has failed to provide a reply to the non-final Office action. A courtesy copy of the October 3, 2003 Office action is being included for petitioner's convenience.

As to item (3), there are three periods to be considered during the evaluation of a petition under 37 CFR 1.137(b):

> (1) the delay in reply that originally resulted in the abandonment;
>
> (2) the delay in filing an initial petition pursuant to 37 CFR 1.137(b) to revive the application; and
>
> (3) the delay in filing a grantable petition pursuant to 37 CFR 1.137(b) to revive the application.

Currently, the delay has not been shown to the satisfaction of the Director to be unintentional for period (2).

Where the applicant deliberately chooses not to seek or persist in seeking the revival of an abandoned application, or where the applicant deliberately chooses to delay seeking the revival of an abandoned application, the resulting delay in seeking revival of the abandoned application cannot be considered as "unintentional" within the meaning of 37 CFR 1.137(b). *See* MPEP 711.03(c).

The language of both 35 U.S.C. § 41(a)(7) and 37 CFR 1.137(b) are clear and unambiguous, and, furthermore, without qualification. That is, the delay in filing the reply during prosecution, as well as in filing the petition seeking revival, must have been, without qualification, "unintentional" for the reply to now be accepted on petition. The Office requires that the entire delay be at least unintentional as a prerequisite to revival of an abandoned application to prevent abuse and injury to the public. *See* H.R. Rep. No. 542, 97th Cong., 2d Sess. 7 (1982), <u>reprinted in</u> 1982 U.S.C.C.A.N. 771 ("[i]n order to prevent abuse and injury to the public the Commissioner . . . could require applicants to

act promptly after becoming aware of the abandonment"). The December 1997 change to 37 CFR 1.137 did not create any new right to overcome an intentional delay in seeking revival, or in renewing an attempt at seeking revival, of an abandoned application. *See* Changes to Patent Practice and Procedure; Final Rule Notice, 62 Fed. Reg. 53131, 53160 (October 10, 1997), 1203 Off. Gaz. Pat. Office 63, 87 (October 21, 1997), which clearly stated that any protracted delay (here, over four years) could trigger, as here, a request for additional information. As the courts have since made clear, a protracted delay in seeking revival, as here, requires a petitioner's detailed explanation seeking to excuse the delay as opposed to USPTO acceptance of a general allegation of unintentional delay. *See* Lawman Armor v. Simon, 2005 U.S. Dist. LEXIS 10843, 74 USPQ2d 1633, at 1637-8 (DC EMich 2005); Field Hybrids, LLC v. Toyota Motor Corp., 2005 U.S. Dist. LEXIS 1159 (D. Minn Jan. 27, 2005) at *21-*23. Statements are required from any and all persons having firsthand knowledge of the circumstances surrounding the protracted delay, after the abandonment date, in seeking revival.

Any renewed petition may be addressed as follows:

By Mail: Mail Stop PETITION
Commissioner for Patents
P. O. Box 1450
Alexandria, VA 22313-1450

By hand: U. S. Patent and Trademark Office
Customer Service Window, Mail Stop Petitions
Randolph Building
401 Dulany Street
Alexandria, VA 22314

The centralized facsimile number is **(571) 273-8300.**

Correspondence regarding this decision may also be filed through the electronic filing system of the USPTO.

Telephone inquiries concerning this decision should be directed to the undersigned at (571) 272-3215.

Charlema Grant
Petitions Attorney
Office of Petitions

enclosure

OIPE
OCT 03 2008
PATENT & TRADEMARK OFFICE

UNITED STATES PATENT AND TRADEMARK OFFICE

Commissioner for Patents
United States Patent and Trademark Office
P.O. Box 1450
Alexandria, VA 22313-1450
www.uspto.gov

Copy

Steven M. Senn
18336 Aurora Ave N
Suite 112-421
Shoreline WA 98133

COPY MAILED
AUG 07 2008

In re Application of :
Steven M. Senn :
Application No. 09/888,554 : DECISION ON PETITION
Filed: June 26, 2001 :
Title: Retail Customer and :
Product Purchase Divider with
Interactive Retail Transaction
Functions

This is a decision on the petition under the unintentional provisions of 37 CFR 1.137(b), filed June 18, 2008, to revive the above-identified application.

The petition is **DISMISSED**.

Any request for reconsideration of this decision must be submitted within TWO (2) MONTHS from the mail date of this decision. Extensions of time under 37 CFR 1.136(a) are permitted. The reconsideration request should include a cover letter entitled "Renewed Petition under 37 CFR 1.137(b)." This is **not** a final agency action within the meaning of 5 U.S.C. § 704.

This above-identified application became abandoned for failure to timely file a reply to a non-final Office Action mailed October 3, 2003. The non-final Office Action set a three (3) month shortened statutory period for reply. No extensions of time were obtained under the provisions of 37 CFR 1.136(a). Accordingly, this application became abandoned on January 4, 2004. A Notice of Abandonment was mailed on May 5, 2004.

Petitioner states that he did not receive the October 3, 2003 non-final Office action and the Notice of Abandonment because he no longer received mail at the correspondence address of record. Petitioner states he unintentionally failed to submit a change of address with the Office.

A grantable petition under 37 CFR 1.137(b) must be accompanied by: (1) the required reply, unless previously filed; (2) the

petition fee as set forth in 37 CFR 1.17(m); (3) a statement that the entire delay in filing the required reply from the due date for the reply until the filing of a grantable petition pursuant to 37 CFR 1.137(b) was unintentional; and (4) any terminal disclaimer (and fee as set forth in 37 CFR 1.20(d)) required by 37 CFR 1.137(d). Where there is a question as to whether either the abandonment or the delay in filing a petition under 37 CFR 1.137 was unintentional, the Director may require additional information. *See* MPEP 711.03(c)(II)(C) and (D). The instant petition lacks item (1) and (3).

As to item (1) petitioner has failed to provide a reply to the non-final Office action. A courtesy copy of the October 3, 2003 Office action is being included for petitioner's convenience.

As to item (3), there are three periods to be considered during the evaluation of a petition under 37 CFR 1.137(b):

> (1) the delay in reply that originally resulted in the abandonment;
>
> (2) the delay in filing an initial petition pursuant to 37 CFR 1.137(b) to revive the application; and
>
> (3) the delay in filing a grantable petition pursuant to 37 CFR 1.137(b) to revive the application.

Currently, the delay has not been shown to the satisfaction of the Director to be unintentional for period (2).

Where the applicant deliberately chooses not to seek or persist in seeking the revival of an abandoned application, or where the applicant deliberately chooses to delay seeking the revival of an abandoned application, the resulting delay in seeking revival of the abandoned application cannot be considered as "unintentional" within the meaning of 37 CFR 1.137(b). *See* MPEP 711.03(c).

The language of both 35 U.S.C. § 41(a)(7) and 37 CFR 1.137(b) are clear and unambiguous, and, furthermore, without qualification. That is, the delay in filing the reply during prosecution, as well as in filing the petition seeking revival, must have been, without qualification, "unintentional" for the reply to now be accepted on petition. The Office requires that the entire delay be at least unintentional as a prerequisite to revival of an abandoned application to prevent abuse and injury to the public. *See* H.R. Rep. No. 542, 97th Cong., 2d Sess. 7 (1982), <u>reprinted in</u> 1982 U.S.C.C.A.N. 771 ("[i]n order to prevent abuse and injury to the public the Commissioner . . . could require applicants to

act promptly after becoming aware of the abandonment"). The December 1997 change to 37 CFR 1.137 did not create any new right to overcome an intentional delay in seeking revival, or in renewing an attempt at seeking revival, of an abandoned application. *See* Changes to Patent Practice and Procedure; Final Rule Notice, 62 Fed. Reg. 53131, 53160 (October 10, 1997), 1203 Off. Gaz. Pat. Office 63, 87 (October 21, 1997), which clearly stated that any protracted delay (here, over four years) could trigger, as here, a request for additional information. As the courts have since made clear, a protracted delay in seeking revival, as here, requires a petitioner's detailed explanation seeking to excuse the delay as opposed to USPTO acceptance of a general allegation of unintentional delay. *See* Lawman Armor v. Simon, 2005 U.S. Dist. LEXIS 10843, 74 USPQ2d 1633, at 1637-8 (DC EMich 2005); Field Hybrids, LLC v. Toyota Motor Corp., 2005 U.S. Dist. LEXIS 1159 (D. Minn Jan. 27, 2005) at *21-*23. Statements are required from any and all persons having firsthand knowledge of the circumstances surrounding the protracted delay, after the abandonment date, in seeking revival.

Any renewed petition may be addressed as follows:

By Mail: Mail Stop PETITION
Commissioner for Patents
P. O. Box 1450
Alexandria, VA 22313-1450

By hand: U. S. Patent and Trademark Office
Customer Service Window, Mail Stop Petitions
Randolph Building
401 Dulany Street
Alexandria, VA 22314

The centralized facsimile number is **(571) 273-8300**.

Correspondence regarding this decision may also be filed through the electronic filing system of the USPTO.

Telephone inquiries concerning this decision should be directed to the undersigned at (571) 272-3215.

Charlema Grant
Petitions Attorney
Office of Petitions

enclosure

OIPE IAP12
OCT 03 2003
PATENT & TRADEMARK OFFICE

UNITED STATES PATENT AND TRADEMARK OFFICE

UNITED STATES DEPARTMENT OF COMMERCE
United States Patent and Trademark Office
Address: COMMISSIONER FOR PATENTS
P.O. Box 1450
Alexandria, Virginia 22313-1450
www.uspto.gov

APPLICATION NO.	FILING DATE	FIRST NAMED INVENTOR	ATTORNEY DOCKET NO.	CONFIRMATION NO.
09/888,554	06/26/2001	Steven Michael Matthew Senn		1749

7590 10/03/2003

Steven M. Senn
5208 - 122 Pl. S.E.
Everett, WA 98208

EXAMINER
CUFF, MICHAEL A

ART UNIT	PAPER NUMBER
3627	

DATE MAILED: 10/03/2003

Please find below and/or attached an Office communication concerning this application or proceeding.

COPY

Office Action Summary	Application No.	Applicant(s)	
	09/888,554	MATTHEW SENN, STEVEN MICHAEL	
	Examiner	Art Unit	
	Michael Cuff	3627	

-- The MAILING DATE of this communication appears on the cover sheet with the correspondence address --

ɔd for Reply

A SHORTENED STATUTORY PERIOD FOR REPLY IS SET TO EXPIRE 3 MONTH(S) FROM THE MAILING DATE OF THIS COMMUNICATION.

- Extensions of time may be available under the provisions of 37 CFR 1.136(a). In no event, however, may a reply be timely filed after SIX (6) MONTHS from the mailing date of this communication.
- If the period for reply specified above is less than thirty (30) days, a reply within the statutory minimum of thirty (30) days will be considered timely.
- If NO period for reply is specified above, the maximum statutory period will apply and will expire SIX (6) MONTHS from the mailing date of this communication.
- Failure to reply within the set or extended period for reply will, by statute, cause the application to become ABANDONED (35 U.S.C. § 133).
- Any reply received by the Office later than three months after the mailing date of this communication, even if timely filed, may reduce any earned patent term adjustment. See 37 CFR 1.704(b).

Status

1)☒ Responsive to communication(s) filed on 22 January 2003 .

2a)☐ This action is **FINAL**. 2b)☒ This action is non-final.

3)☐ Since this application is in condition for allowance except for formal matters, prosecution as to the merits is closed in accordance with the practice under *Ex parte Quayle*, 1935 C.D. 11, 453 O.G. 213.

Disposition of Claims

4)☐ Claim(s) 1-3 is/are pending in the application.

4a) Of the above claim(s) _____ is/are withdrawn from consideration.

5)☐ Claim(s) _____ is/are allowed.

6)☐ Claim(s) 1-3 is/are rejected.

7)☐ Claim(s) _____ is/are objected to.

8)☐ Claim(s) _____ are subject to restriction and/or election requirement.

Application Papers

9)☐ The specification is objected to by the Examiner.

10)☐ The drawing(s) filed on _____ is/are: a)☐ accepted or b)☐ objected to by the Examiner.

Applicant may not request that any objection to the drawing(s) be held in abeyance. See 37 CFR 1.85(a).

11)☐ The proposed drawing correction filed on _____ is: a)☐ approved b)☐ disapproved by the Examiner.

If approved, corrected drawings are required in reply to this Office action.

12)☐ The oath or declaration is objected to by the Examiner.

Priority under 35 U.S.C. §§ 119 and 120

13)☐ Acknowledgment is made of a claim for foreign priority under 35 U.S.C. § 119(a)-(d) or (f).

a)☐ All b)☐ Some * c)☐ None of:

1.☐ Certified copies of the priority documents have been received.

2.☐ Certified copies of the priority documents have been received in Application No. _____ .

3.☐ Copies of the certified copies of the priority documents have been received in this National Stage application from the International Bureau (PCT Rule 17.2(a)).

* See the attached detailed Office action for a list of the certified copies not received.

14)☐ Acknowledgment is made of a claim for domestic priority under 35 U.S.C. § 119(e) (to a provisional application).

a) ☐ The translation of the foreign language provisional application has been received.

15)☐ Acknowledgment is made of a claim for domestic priority under 35 U.S.C. §§ 120 and/or 121.

Attachment(s)

1) ☒ Notice of References Cited (PTO-892)
2) ☐ Notice of Draftsperson's Patent Drawing Review (PTO-948)
3) ☒ Information Disclosure Statement(s) (PTO-1449) Paper No(s) 4 .
4) ☐ Interview Summary (PTO-413) Paper No(s). _____ .
5) ☐ Notice of Informal Patent Application (PTO-152)
6) ☐ Other:

DETAILED ACTION

Letter concerning provisional application

Applicant submitted a letter, filed 1/22/03, which stated that a provisional application has been filed for this application. Applicant must submit a supplemental declaration/oath, which claims the continuation. The domestic priority date, when properly claimed will change the 102(b) rejection into a 102(e) rejection.

Claim Rejections - 35 USC § 102

1. The following is a quotation of the appropriate paragraphs of 35 U.S.C. 102 that form the basis for the rejections under this section made in this Office action:

> A person shall be entitled to a patent unless –
>
> (b) the invention was patented or described in a printed publication in this or a foreign country or in public use or on sale in this country, more than one year prior to the date of application for patent in the United States.

Claims 1-3 are rejected under 35 U.S.C. 102(b) as being anticipated by Tracy et al.

Tracy et al. shows, figures 4 and 5, a method and system for presenting item information using a portable terminal 100 (an exterior housing). The terminal 100 has a barcode reader 120 (electronic data input component) and a display 110. Figure 4 shows communications, including price data, through an RF 130 connection (wireless method) between the portable terminal and a POS terminal. Column 7, lines 37-41, shows an electronic marking (attached device identification), which is provided as a means for identifying the location of the bar code by the central processor.

7007 1490 0000 1962 9474

U.S. Postal Service™
CERTIFIED MAIL™ RECEIPT
(Domestic Mail Only; No Insurance Coverage Provided)
For delivery information visit our website at www.usps.com®
ALEXANDRIA VA 22313 OFFICIAL USE

Postage	$ $0.41	0006
Certified Fee	$2.65	12
Return Receipt Fee (Endorsement Required)	$0.00	Postmark Here
Restricted Delivery Fee (Endorsement Required)	$0.00	
Total Postage & Fees	$ $3.06	02/21/2008

Sent To: Commissioner of Patents
Street, Apt. No.; or PO Box No.: P.O. Box 1450
City, State, ZIP+4: Alexandria, VA 22313-1450
PS Form 3800, August 2006 See Reverse for Instructions

/E SENN / SENNCO
. Ste 112-421, Shoreline, WA 98133
– e-mail stevesenn@gmail.com

x: 571-273-8300
was faxed on Feb 11, 2008.
These originals were mailed
on Feb 16, 2008.

7006 3450 0001 6653 5724

U.S. Postal Service™
CERTIFIED MAIL™ RECEIPT
(Domestic Mail Only; No Insurance Coverage Provided)
For delivery information visit our website at www.usps.com®
ALEXANDRIA VA 22313 OFFICIAL USE

Postage	$ $0.41	0006
Certified Fee	$2.65	05
Return Receipt Fee (Endorsement Required)	$0.00	Postmark Here
Restricted Delivery Fee (Endorsement Required)	$0.00	
Total Postage & Fees	$ $3.06	03/24/2008

Sent To: Commissioner of Patents
Street, Apt. No.; or PO Box No.: P.O. Box 1450
City, State, ZIP+4: Alexandria, VA 22313-1450
PS Form 3800, August 2006 See Reverse for Instructions

E SENN / SENNCO
Ste 112-421, Shoreline, WA 98133
– e-mail stevesenn@gmail.com

ogram Manager 3600

ger Area 3600

Letter
0.20 oz.
Certified $2.65
Label #: 70063450000166535724
========
Issue PVI: $3.06
==========
Total: $2.06

: "09/888/554", Title: "Retail Customer and Product Purchase Divider
ıctions"

w the action for abandonment for this patent application (number
process. I never received an "Office Action Letter" or an "Abandonment

7006 3450 0001 6578 1375

U.S. Postal Service™
CERTIFIED MAIL™ RECEIPT
(Domestic Mail Only; No Insurance Coverage Provided)
For delivery information visit our website at www.usps.com®
ALEXANDRIA VA 22313 OFFICIAL USE

Postage	$ $0.42	0006
Certified Fee	$2.70	
Return Receipt Fee (Endorsement Required)	$2.20	Postmark JUN 16 2008 BITTERLAKE STATION SEATTLE WA 98133
Restricted Delivery Fee (Endorsement Required)	$0.00	
Total Postage & Fees	$ $5.32	06/16/2008

Sent To: Mail Stop Petition / Comm of Patents
Street, Apt. No.; or PO Box No.: P.O. Box 1450
City, State, ZIP+4: Alexandria, VA 22313-1450

PTO/SB/64 (01-08)
Approved for use through 06/30/2008. OMB 0651-0031
U.S. Patent and Trademark Office; U.S. DEPARTMENT OF COMMERCE
re required to respond to a collection of information unless it displays a valid OMB control number.

PLICATION FOR PATENT JNDER 37 CFR 1.137(b)	Docket Number (Optional)

Senn

Art Unit:

Examiner: Michael Cuff

Product Purchase Divider with
Transactional Functions

SENDER: COMPLETE THIS SECTION

- Complete items 1, 2, and 3. Also complete item 4 if Restricted Delivery is desired.
- Print your name and address on the reverse so that we can return the card to you.
- Attach this card to the back of the mailpiece, or on the front if space permits.

1. Article Addressed to:

Mail Stop Petition
Commissioner of Patents
P.O. Box. 1450
Alexandria, VA 22313-1450

COMPLETE THIS SECTION ON DELIVERY

A. Signature

X

☐ Agent
☐ Addressee

B. Received by (Printed Name) C. Date of Delivery

D. Is delivery address different from item 1? ☐ Yes
If YES, enter delivery address below: ☐ No

RECEIVED
JUN 18 2008
USPTO MAIL CENTER

3. Service Type
☒ Certified Mail ☐ Express Mail
☐ Registered ☐ Return Receipt for Merchandise
☐ Insured Mail ☐ C.O.D.

4. Restricted Delivery? *(Extra Fee)* ☐ Yes

2. Article Number
(Transfer from service label) 7006 3450 0001 6578 1375

PS Form 3811, February 2004 Domestic Return Receipt 102595-02-M-1540

SOCIAL SECURITY ADMINISTRATION

Refer To: [redacted]

OIPE IAP12
OCT 03 2008
PATENT & TRADEMARK OFFICE

Office of Disability Adjudication and Review
Suite 500
2201 Sixth Ave
Seattle, WA 98121

Date: APR - 7 2008

Steven M Senn
18336 Aurora Ave. N
#112-421
Shoreline, WA 98133

NOTICE OF DECISION – FULLY FAVORABLE

I have made the enclosed decision in your case. Please read this notice and the decision carefully.

This Decision is Fully Favorable To You

Another office will process the decision and send you a letter about your benefits. Your local Social Security office or another may first ask you for more information. If you do not hear anything for 60 days, contact your local office.

The Appeals Council May Review The Decision On Its Own

The Appeals Council may decide to review my decision even though you do not ask it to do so. To do that, the Council must mail you a notice about its review within 60 days from the date shown above. Review at the Council's own motion could make the decision less favorable or unfavorable to you.

If You Disagree With The Decision

If you believe my decision is not fully favorable to you, or if you disagree with it for any reason, you may file an appeal with the Appeals Council.

How to File an Appeal

To file an appeal you or your representative must request that the Appeals Council review the decision. You must make the request in writing. You may use our Request for Review form, HA-520, or write a letter.

You may file your request at any local Social Security office or a hearing office. You may also mail your request right to the **Appeals Council, Office of Disability Adjudication and Review, 5107 Leesburg Pike, Falls Church, VA 22041-3255**. Please put the Social Security number shown above on any appeal you file.

See Next Page

SOCIAL SECURITY ADMINISTRATION
Office of Disability Adjudication and Review

ORDER OF ADMINISTRATIVE LAW JUDGE

IN THE CASE OF

Steven M Senn
(Claimant)

(Wage Earner)

CLAIM FOR
Period of Disability,
Disability Insurance Benefits, and
Supplemental Security Income

[redacted]
(Social Security Number)

I do not approve the fee agreement between you and your representative because:

> You appointed representatives who are not members of the same law firm or other business, and the representative(s) from the other law firm(s) or business(s) did not waive charging and collecting a fee.

HOW TO ASK US TO REVIEW THE FEE AGREEMENT DETERMINATION
You or your representative can ask us to review the determination on the fee agreement. If you decide to ask us for a review, write us within 15 days from the day you get this order. Tell us that you disagree and give your reasons. Send your request to this address:

- **David J. Delaittre**
  Regional Chief Administrative Law Judge
  SSA ODAR Regional Ofc
  Suite 2900 M/S 901
  701 Fifth Ave
  Seattle, WA 98104

Your representative also has 15 days to write us if he or she does not agree with the determination on the fee agreement.

You should include the social security number(s) shown on this order on any papers you send us.

AUTHORIZING A REPRESENTATIVE'S FEE UNDER THE FEE PETITION PROCESS
If neither you nor your representative requests review, your representative must file a fee petition if he or she wants to charge and collect a fee. I have enclosed with the representative's copy of this order a Form SSA-1560 (Petition to Obtain Approval of a Fee for Representing a Claimant before the Social Security Administration) (he/she) may use for this purpose.

Sincerely yours,

Victor Sampson
Administrative Law Judge

APR - 7, 2008

10. Considering the claimant's age, education, work experience, and residual functional capacity, there are no jobs that exist in significant numbers in the national economy that he can perform (20 CFR 404.1560(c), 404.1566, 416.960(c), and 416.966).

In determining whether a successful adjustment to other work can be made, the undersigned must consider the claimant's residual functional capacity, age, education, and work experience in conjunction with the Medical-Vocational Guidelines, 20 CFR Part 404, Subpart P, Appendix 2. If the claimant can perform all or substantially all of the exertional demands at a given level of exertion, the medical-vocational rules direct a conclusion of either "disabled" or "not disabled" depending upon the claimant's specific vocational profile (SSR 83-11). When the claimant cannot perform substantially all of the exertional demands of work at a given level of exertion and/or has nonexertional limitations, the medical-vocational rules are used as a framework for decisionmaking unless there is a rule that directs a conclusion of "disabled" without considering the additional exertional and/or nonexertional limitations (SSRs 83-12 and 83-14). If the claimant has solely nonexertional limitations, section 204.00 in the Medical-Vocational Guidelines provides a framework for decisionmaking (SSR 85-15).

Even if the claimant had the residual functional capacity for the full range of sedentary work, considering the claimant's age, education, and work experience, a finding of "disabled" would be 201.14.

The vocational expert testified that the claimant's limitations in sitting, standing, and walking erode his occupational base. Additionally, his need for close access to bathroom facilities and unpredictable breaks would exceed customary work tolerances. The vocational expert's opinion is consistent with the record as a whole and is persuasive.

11. The claimant has been under a disability, as defined in the Social Security Act, from August 23, 2003, through the date of this decision (20 CFR 404.1520(g) and 416.920(g)).

DECISION

Based on the application for a period of disability and disability insurance benefits protectively filed on January 10, 2005, the claimant has been disabled under sections 216(i) and 223(d) of the Social Security Act beginning on August 23, 2003.

See Next Page

Based on the application for supplemental security income protectively filed on January 10, 2005, the claimant has been disabled under section 1614(a)(3)(A) of the Social Security Act beginning on August 23, 2003.

The component of the Social Security Administration responsible for authorizing supplemental security income will advise the claimant regarding the nondisability requirements for these payments, and if eligible, the amount and the months for which payment will be made.

Victor Sampson
Administrative Law Judge

APR - 7, 2008

Date

OIPE IAP12
OCT 03 2008
PATENT & TRADEMARK OFFICE

Dear Mr. Senn,

Your application came in from our file repository. I reviewed the case and your petition to revive is in the file. I forwarded the case to the Office of Petitions and they will act upon the petition and have the problem of the case being a hybrid file (1/2 paper and 1/2 electonic) corrected. I would give them some time to get the case docketed before calling. I'd say you should follow up in a few weeks by calling their help desk at 571-272-3282. Good luck.

Kind Regards,

Joseph F. Weiss, Jr.
Patent Examination Policy Advisor
Madison West 7D65
571-272-7759 (V)
571-273-7759(F)

OIPE IAP12
OCT 0 8 2008
PATENT & TRADEMARK OFFICE

STATE OF WASHINGTON
DEPARTMENT OF SOCIAL AND HEALTH SERVICES
Region 3 HIU N31-1 PO Box 6056 * Arlington, WA 98223-9956 * (425)438-4971

08/08/2005

STEVE M SENN
5208 122ND PL SE
EVERETT, WA 98208-9223

Client Nu[redacted]
Program: GA-X
Language: EN

Incapacity Review Date: 07/31/2006

We have decided that you are unable to work at this time based onDigestive.
The following requirements are expected to help you become able to work or reduce your need for assistance (WAC 388-448-0130). Your plan is:

You have been approved for GAX medical (better coverage). If you have questions about coverage, please refer to the number on the back of your medical coupon.
You must cooperate with treatment, including therapy and medication, as recommended by your doctor. You have been referred to an SSI Facilitator in order to determine if you may be eligible for Supplemental Security Income (SSI). You will be notified by the SSI Facilitator of any requirements resulting from this referral.

From time to time we will ask you for proof that you are following the above plan. For example, you will be asked to show that you are keeping appointments or following directions.

- **Let me know right away** if you have a good reason for not participating with any of the above requirements. If we accept your reason, we will change or remove the requirement and send you a copy of the new plan.

If you do not follow your plan without good reason or do not give us proof when asked, we will stop your assistance. If you reapply later, you will lose from one week up to two months of benefits as a penalty for not participating.

If you disagree with the plan or our decision to stop your assistance, you have the right to ask for a Fair Hearing.

Note: If you have questions about receiving cash, food, or medical assistance, please call:
call center 438-4971

Please call me if you need help understanding this letter or with meeting these requirements.

Deanna Hudson
Social Worker

Telephone: 425-339-4704
Everett CSO

DSHS 14-249 (04/2005)

-GA-

CLAIMANT: [redacted] STEVEN M SENN

RECEIPT FOR YOUR CLAIM FOR SUPPLEMENTAL SECURITY INCOME
RECEIPT DATE: February 8, 2005

On February 8, 2005, we talked with you and completed your application for Supplemental Security Income (SSI). We stored your application information, including your signature, electronically in our records and have attached a summary of your statements for your review.

What You Need To Do

- Review your application to ensure we recorded your statements correctly.
- If you agree with all your statements, you may retain the application for your records.
- If you disagree with any of your statements, you should contact us within 10 days after the date of this receipt to let us know.

IMPORTANT REMINDER

Penalty of Perjury

You declared under penalty of perjury that you examined all the information on this form and it is true and correct to the best of your knowledge. You were told that you could be liable under law for providing false information.

If you have a question or something to report call (425) 347 0767 x 279. For general information about Social Security, visit our web site at www.socialsecurity.gov on the Internet.

MRS. L. FRY
Lynn

You may visit or write to the Social Security Office at:

SOCIAL SECURITY
SUITE 250
8625 EVERGREEN WAY
EVERETT WA 98208

KEEP THESE PAGES FOR YOUR RECORDS

[redacted]

STEVEN M SENN
5208 122ND PL SE
EVERETT, WA 98208

[redacted]

Law Office of Dale Wagner

Focusing on Workers' Compensation and Social Security Disability Law
9820 270th Street NW
P.O. Box 698
Stanwood, WA 98292-0698

November 19, 2007

Re: Steven M. Senn
Social Security Number/Claim Number: [redacted]
Title II & Title XVI

To Whom It May Concern:

Our office represents Steven M. Senn in the above claims. Steven applied for social security disability benefits in January of 2005. Steven stated in his application for disability insurance benefits that he has been unable to work due to his disabilities since August 23, 2003. At this time we are awaiting the scheduling of a hearing date before an administrative law judge to present Steven's claim for benefits.

If you need anything further from our office, please give me a call.

Sincerely,

Law Office of Dale Wagner

Marcella Russo

Marcella Russo
Paralegal for Dale T. Wagner
Attorney for Steven Senn

cc: file/chrono

(360) 629-5276 *Email: dwagnerlaw@verizon.net* *Website: dalewagnerlaw.com* *Fax: (360) 629-9037*

EVERETT
PO BOX 6056
ARLINGTON WA 98223-6056

Washington State
Department of Social
& Health Services

Phone # 425-438-4971
TTY/TDD # 425-339-4075
Toll Free #

03/17/06

STEVE M SENN
5208 122ND PL SE
EVERETT WA 98208-9223

425
379 6036

Dear Ms./Mr. STEVE M SENN

TO WHOM IT CONCERNS:

Steve was determined disabled and started receiving General Assistance Cash Grant and Medical ($339/mo) in July 2005. At this time, he is still receiving this monthly assistance as well as Basic Food Assistance of $152.00 per month. (See benefit history for cash and food)

Rachelle Nuckles
FSS 3
(425) 339 4705

Please call me if you have any questions about this letter.

CUSTOMER SERVICES(NURA)
425-438-4971

Rachelle
Nuckles

FedEx Express USA Airbill

FedEx Tracking Number 828438231997

Form ID No. 0200

1 From *Please print and press hard.*

Date 6/25/01 Sender's FedEx Account Number

Sender's Name Steve Sein Phone (425) 379-6036

Company

Address 5208-122 Pl. S.E. Dept./Floor/Suite/Room

City Everett State WA ZIP 98208

2 Your Internal Billing Reference First 24 characters will appear on invoice.

3 To

Recipient's Name US Patent Office Phone ( )

Company

Address 2011 South Clark Place

To "HOLD" at FedEx location, print FedEx address. We cannot deliver to P.O. boxes or P.O. ZIP codes.

Crystal Plaza 2, Room 1B03 - Mail Dept./Floor/Suite/Room

City Arlington State VA ZIP 22202

Questions? Visit our Web site at fedex.com
or call 1·800·Go·FedEx* (800)463-3339.

By using this Airbill you agree to the service conditions on the back of this Airbill and in our current Service Guide, including terms that limit our liability.

4a Express Package Service *Packages up to 150 lbs.* Delivery commitment may be later in some areas

- [ ] FedEx Priority Overnight — Next business morning
- [x] FedEx Standard Overnight — Next business afternoon
- [ ] FedEx First Overnight — Earliest next business morning delivery to select locations
- [ ] FedEx 2Day — Second business day
- [ ] FedEx Express Saver — Third business day

FedEx Envelope rate not available. Minimum charge: One-pound rate

- [ ] NEW FedEx Extra Hours — Later drop-off with next business afternoon delivery for select locations

4b Express Freight Service *Packages over 150 lbs.* Delivery commitment may be later in some areas.

- [ ] FedEx 1Day Freight* — Next business day
- [ ] FedEx 2Day Freight — Second business day
- [ ] FedEx 3Day Freight — Third business day

* Call for Confirmation:

5 Packaging * Declared value limit $500

- [x] FedEx Envelope*
- [ ] FedEx Pak* — Includes FedEx Small Pak, FedEx Large Pak, and FedEx Sturdy Pak
- [ ] Other Pkg. — Includes FedEx Box, FedEx Tube, and customer pkg.

6 Special Handling Include FedEx address in Section 3.

- [ ] SATURDAY Delivery — RESTRICTIONS: Available only for FedEx Priority Overnight and FedEx 2Day to select ZIP codes
- [ ] SUNDAY Delivery — RESTRICTIONS: Available only for FedEx Priority Overnight to select ZIP codes
- [ ] HOLD Weekday at FedEx Location — RESTRICTIONS: Not available with FedEx First Overnight
- [ ] HOLD Saturday at FedEx Location — RESTRICTIONS: Available only for FedEx Priority Overnight and FedEx 2Day to select locations

Does this shipment contain dangerous goods? One box must be checked.

- [ ] No
- [ ] Yes — As per attached Shipper's Declaration
- [ ] Dry Ice — Dry Ice, 9, UN 1845 ____ x ____ kg
- [ ] Cargo Aircraft Only

Dangerous Goods (incl. Dry Ice) cannot be shipped in FedEx packaging or with FedEx Extra Hours service.

7 Payment *Bill to:*

- [ ] Sender — Acct. No. in Section 1 will be billed
- [ ] Recipient
- [ ] Third Party
- [x] Credit Card
- [ ] Cash/Check

FedEx Acct. No. / Credit Card No. 5458 0040 2520 5550 Exp. Date 8/03

Total Packages	Total Weight	Total Declared Value†
		$ .00

†Our liability is limited to $100 unless you declare a higher value. See back for details.

1534 FedEx Use Only

8 Release Signature *Sign to authorize delivery without obtaining signature.*

By signing you authorize us to deliver this shipment without obtaining a signature and agree to indemnify and hold us harmless from any resulting claims.

404

Rev. Date 12/00 • Part #155915 • ©1994–2000 FedEx • PRINTED IN U.S.A. GBFE 4/01

Non-Provisional Patent Application

June 24, 2001 Inventor: Steven M. Senn

Title: Retail Customer and Product Purchase Divider with Interactive retail Transaction Functions.

Utility Patent Application Transmittal PTO/SB/05 1 of 1
Fee Transmittal PTO/SB/17 1 of 1
Declaration For Utility Patent PTO/SB/01 2 of 2
Credit Card Payment Form PTO-2038 1 of 1
Specification 13 Pages
Claims 1 Page
Drawings Fig. 11 Sheets 5
Declaration Application Included
Payment $355.00 Mastercard Deposit Account.

jc996 U.S. PTO
09/888554
06/26/01

1 Letter to The Commissioner of Patents
14 Pages of Specifications
14 Pages of Drawings

jc625 U. PTC
60/214545
06/27/00

Provisional Patent application

STEVEN M. SENN. 2287

SENNCO
5208 122ND PL SE
EVERETT, WA 98208-9223
425-742-3012

Steven M. Senn.

98-698/1251

Date 6/22/00

220048053 012 0145 2130 09 22

Pay to the Order of Commissioner of Patents & Trademarks 75.00

Seventy Five 00/100

CITYBANK
MILL CREEK OFFICE 338-4300
1504 - 132nd Street S.E.
P.O. Box 12397
Mill Creek, WA 98082

INTERACTIVE: Gregory

For Provider Donation

COPY

COPY

⑆125106986⑆1181⑈145762⑈06 2287 ⑈0000007500⑈

Attest To PTO

UNITED STATES POSTAL SERVICE
***** WELCOME TO *****
MILL CREEK STATION
MILL CREEK, WA 98012-9998
06/22/00 02:57PM

Store USPS Trans 99
Wkstn sys5004 Cashier KOX2JD
Cashier's Name ERMA
Stock Unit Id WIN08ERMAT
PO Phone Number 800-275-8777

1. Priority Mail 3.55
Destination: 20231
Weight: 6.30oz
Postage Type: PVI
Total Cost: 3.55
Base Rate: 3.20
SERVICES
Deliv. Confirmation 0.35
Label#: 0300600000043734053
2. First Class 0.77
Destination: 98072
Weight: 2.20oz
Postage Type: PVI
Total Cost: 0.77
Base Rate: 0.77

Provisionary Patent DPI

Subtotal 4.32
Total 4.32

Cash 10.00
Change Due
Cash 5.68

Number of Items Sold: 2

Thank You
Please come again!

UNITED STATES PATENT AND TRADEMARK OFFICE

Commissioner for Patents
United States Patent and Trademark Office
P.O. Box 1450
Alexandria, VA 22313-1450
www.uspto.gov

Steven M. Senn
18336 Aurora Ave N
Suite 112-421
Shoreline WA 98133

COPY MAILED
DEC 15 2008

In re Application of	:	
Steven M. Senn	:	
Application No. 09/888,554	:	DECISION ON PETITION
Filed: June 26, 2001	:	
Title: Retail Customer and	:	
Product Purchase Divider with	:	
Interactive Retail Transaction	:	
Functions	:	

This is a decision on the petition under the unintentional provisions of 37 CFR 1.137(b), filed October 3, 2008, to revive the above-identified application.

The petition is **DISMISSED.**

Any request for reconsideration of this decision must be submitted within TWO (2) MONTHS from the mail date of this decision. Extensions of time under 37 CFR 1.136(a) are permitted. The reconsideration request should include a cover letter entitled "Renewed Petition under 37 CFR 1.137(b)." This is **not** a final agency action within the meaning of 5 U.S.C. § 704.

This above-identified application became abandoned for failure to timely file a reply to a non-final Office Action mailed October 3, 2003. The non-final Office Action set a three (3) month shortened statutory period for reply. No extensions of time were obtained under the provisions of 37 CFR 1.136(a). Accordingly, this application became abandoned on January 4, 2004. A Notice of Abandonment was mailed on May 5, 2004. A petition filed under 37 CFR 1.137(b) was dismissed on August 7, 2008.

Petitioner states that he did not receive the October 3, 2003 non-final Office action and the Notice of Abandonment because he no longer received mail at the correspondence address of record. Petitioner states he unintentionally failed to submit a change of address with the Office.

A grantable petition under 37 CFR 1.137(b) must be accompanied by: (1) the required reply, unless previously filed; (2) the petition fee as set forth in 37 CFR 1.17(m); (3) a statement that the entire delay in filing the required reply from the due date for the reply until the filing of a grantable petition pursuant to 37 CFR 1.137(b) was unintentional; and (4) any terminal disclaimer (and fee as set forth in 37 CFR 1.20(d)) required by 37 CFR 1.137(d). Where there is a question as to whether either the abandonment or the delay in filing a petition under 37 CFR 1.137 was unintentional, the Director may require additional information. *See* MPEP 711.03(c)(II)(C) and (D). The instant petition lacks item (1).

As to item (1) petitioner has failed to provide a reply to the non-final Office action. A petition to revive cannot be granted without a reply to the October 3, 2003 Office action.

As to petitioner's request for a 12 month extension of time, the maximum period for extension of time which can be purchased based upon a petition decision is five months pursuant to 37 CFR 1.136.

Any renewed petition may be addressed as follows:

By Mail: Mail Stop PETITION
Commissioner for Patents
P. O. Box 1450
Alexandria, VA 22313-1450

By hand: U. S. Patent and Trademark Office
Customer Service Window, Mail Stop Petitions
Randolph Building
401 Dulany Street
Alexandria, VA 22314

The centralized facsimile number is **(571) 273-8300.**

Correspondence regarding this decision may also be filed through the electronic filing system of the USPTO.

Telephone inquiries concerning this decision should be directed to the undersigned at (571) 272-3215.

Charlema Grant
Petitions Attorney
Office of Petitions

UNITED STATES PATENT AND TRADEMARK OFFICE

COMMISSIONER FOR PATENTS
UNITED STATES PATENT AND TRADEMARK OFFICE
P.O. BOX 1450
ALEXANDRIA, VA 22313-1450
www.uspto.gov

Steven M. Senn
18336 Aurora Ave N
Suite 112-421
Shoreline WA 98133

MAILED

JUN 12 2009

OFFICE OF PETITIONS

In re Application of
Steven Michael Mathew Seen
Application No. 09/888,554
Filed: June 26, 2001
For. RETAIL CUSTOMER AND PRODUCT PURCHASE DIVIDER WITH INTERACTIVE RETAIL TRANSACTION FUNCTIONS

DECISION ON PETITION

This is a decision on the renewed petition under the unintentional provisions of 37 CFR 1.137(b), filed March 16, 2009, to revive the above-identified application.

The petition is **GRANTED**.

This above-identified application became abandoned for failure to timely file a reply to a non-final Office Action mailed October 3, 2003. The non-final Office Action set a three (3) month shortened statutory period for reply. No extensions of time were obtained under the provisions of 37 CFR 1.136(a). Accordingly, this application became abandoned on January 4, 2004. A Notice of Abandonment was mailed on May 5, 2004.

The petition satisfies the requirements of 37 CFR 1.137(b) in that petitioner has supplied (1) the reply in the form of an amendment, (2) the petition fee of $770.00, and (3) a proper statement of unintentional delay.

Telephone inquiries concerning this decision should be directed to the undersigned at (571) 272-3215.

This application is being referred to Technology Center AU 3627 for appropriate action by the Examiner in the normal course of business on the reply received

Charlema Grant
Petitions Attorney
Office of Petitions

UNITED STATES PATENT AND TRADEMARK OFFICE

Commissioner for Patents
United States Patent and Trademark Office
Washington, D.C. 20231
www.uspto.gov

Paper No. 4

DARBY & DARBY, P.C.
805 THIRD AVENUE
NEW YORK, NY 10022

COPY MAILED

JAN 22 2002

OFFICE OF PETITIONS

ON PETITION

In re Application of
STANLEY E. DUNN
Application No. 09/888,636
Filed: June 20, 2001
Attorney Docket No. 0366/1E150-US1

This is a decision on the petition filed October 11, 2001 requesting that the above-identified application be accorded a filing date of June 20, 2001.

The application was filed on June 20, 2001. However, on August 20, 2001, the Office of Initial Patent Examination (OIPE) mailed a "Notice of Incomplete Nonprovisional Application" requiring at least one claim in compliance with 35 USC 112 and stating that the filing date would be the date of receipt of the omitted claim.

In response, on October 11, 2001, the present petition and pages 12 - 15 (4 pages) of the specification containing claims 1 - 21 were filed. Petitioners contend that pages 12 - 15 were deposited with the application papers on June 20, 2001. As evidence thereof, petitioners submitted a copy of their date-stamped postcard receipt which acknowledges receipt on June 20, 2001, of, inter alia, eleven (11) pages of specification, four (4) pages of claims, one (1) page of abstract, eight (8) sheets of drawings and three (3) pages of unsigned declaration.

The eleven (11) pages of specification, four (4) pages of claims, one (1) page of abstract, eight (8) sheets of drawings and three (3) pages of unsigned declaration filed on June 20, 2001 have been located in the application file. Therefore, the application was complete for filing date purposes on filing.

In view of the above, the petition is granted.

A treasury check refunding the $65.00 petition fee shall be issued.

The application is being returned to OIPE for further processing with a filing date of June 20, 2001 and to await the submission of a signed declaration.

Telephone inquiries concerning this matter may be directed to Petitions Attorney Edward Tannouse at (703) 306-9200.

Edward J. Tannouse
Petitions Attorney
Office of Petitions
Office of the Deputy Commissioner
for Patent Examination Policy

Beverly M. Flanagan
Supervisory Petitions Examiner
Office of Petitions
Office of the Deputy Commissioner
for Patent Examination Policy

UNITED STATES PATENT AND TRADEMARK OFFICE

COMMISSIONER FOR PATENTS
UNITED STATES PATENT AND TRADEMARK OFFICE
P.O. BOX 1450
ALEXANDRIA, VA 22313-1450
www.uspto.gov

Paper No. 5

MAIL

OCT 1 0 2003

DIRECTOR OFFICE
TECHNOLOGY CENTER 2100

Paul J. Skwierawski
ANTONELLI, TERRY, STOUT & KRAUS, LLP
1300 North Seventeenth Street, Suite 1800
Arlington, VA 22209

In re Application of:
Beier
Application No. 09/888,646
Filed: June 26, 2001
For: METHOD AND APPARATUS FOR USING THE TYPE/LENGTH FIELD IN AN ETHERNET MAC HEADER FOR CARRYING GENERIC TAGS/LABELS

DECISION ON REQUEST FOR WITHDRAWAL AS ATTORNEY

This is a decision on the Request To Withdraw from Representation filed September 25, 2003.

A grantable request to withdraw as attorney of record should indicate thereon the present mailing addresses of the attorney(s) who is/are withdrawing from the record and of the applicant. The request for withdrawal must be signed by every attorney seeking to withdraw or contain a clear indication that one attorney is signing on behalf of another/others. A request to withdraw will not be approved unless at least 30 (thirty) days would remain between the date of approval and the later of the expiration date of a time to file a response or the expiration date of the maximum time period which can be extended under 37 C.F.R. § 1. 136(a). The effective date of withdrawal being the date of decision and not the date of request. See M.P.E.P. § 402.06. 37 C.F.R. § 1.36 further requires that the applicant or patent owner be notified of the withdrawal of the attorney or agent.

The request filed September 25, 2003 meets all the requirements. Accordingly the request is **GRANTED**.

All future communications from the Office will be directed to the below-listed address until otherwise notified by applicant. This correspondence address is provided by the withdrawn attorney(s). Applicant is reminded of the obligation to promptly notify the Patent and Trademark Office (Office) of any change in correspondence address to ensure receipt of all communications from the Office.

For James R. Matthews

Vincent N. Trans
Special Programs Examiner
Technology Center 2100
Computer Architecture and Software
(703) 305-9750

cc: KENYON & KENYON
1500 K Street, N.W.
Suite 700
Washington, DC 20005-1257

UNITED STATES PATENT AND TRADEMARK OFFICE

COMMISSIONER FOR PATENTS
UNITED STATES PATENT AND TRADEMARK OFFICE
P.O. BOX 1450
ALEXANDRIA, VA 22313-1450
WWW.USPTO.GOV

Paper No. 13

ZAGORIN O'BRIEN & GRAHAM
401 W 15TH STREET
SUITE 870
AUSTIN TX 78701

COPY MAILED

AUG 29 2003

OFFICE OF PETITIONS

In re Application of
Michael Perrott
Application No. 09/888,663
Filed: June 25, 2001
Attorney Docket No. 026-0012

ON PETITION

This is a decision on the petition, filed by facsimile transmission on August 28, 2003, under 37 CFR 1.313(c)(2) to withdraw the above-identified application from issue after payment of the issue fee.

The petition is **GRANTED**.

The above-identified application is withdrawn from issue for consideration of a submission under 37 CFR 1.114 (request for continued examination). See 37 CFR 1.313(c)(2).

Petitioner is advised that the issue fee paid on July 3, 2003 in the above-identified application cannot be refunded. If, however, the above-identified application is again allowed, petitioner may request that it be applied towards the issue fee required by the new Notice of Allowance.[1]

Telephone inquiries should be directed to the undersigned at (703) 305-8859.

After receipt of the file in the Office of Petitions, the application will be forwarded to Technology Center AU 2817 for processing of the request for continued examination under 37 CFR 1.114.

Karen Creasy

Karen Creasy
Petitions Examiner
Office of Petitions
Office of the Deputy Commissioner
for Patent Examination Policy

---

[1] The request to apply the issue fee to the new Notice may be satisfied by completing and returning the new Issue Fee Transmittal Form PTOL-85(b), which includes the following language thereon: "Commissioner for Patents is requested to apply the Issue Fee and Publication Fee (if any) or re-apply any previously paid issue fee to the application identified above." Petitioner is advised that, whether a fee is indicated as being due or not, the Issue Fee Transmittal Form **must** be completed and timely submitted to avoid abandonment. Note the language in bold text on the first page of the Notice of Allowance and Fee(s) Due (PTOL-85).

UNITED STATES PATENT AND TRADEMARK OFFICE

COMMISSIONER FOR PATENTS
UNITED STATES PATENT AND TRADEMARK OFFICE
P.O. BOX 1450
ALEXANDRIA, VA 22313-1450
WWW.USPTO.GOV

Paper No. 14

Date : August 29, 2003

TO : Director, Office of Publication and Dissemination

FROM : Office of the Deputy Commissioner
for Patent Examination Policy

SUBJECT : Withdrawal from Issue of

Applicant(s) : Michael Perrott
Application No. : 09/888,663
Filed : June 25, 2001

The above-identified application has been assigned Patent No. 6,621,355 and an issue date of September 16, 2003.

It is hereby directed that this application be withdrawn from issue at the request of the applicant.

Do not refund the issue fee.

The following erratum should be published in the Official Gazette if the above-identified application is published in the OG of September 16, 2003:

> "All reference to Patent No. 6,621,355 to Michael Perrott of Massachusetts for METHOD AND APPARATUS FOR ACQUIRING A FREQUENCY WITHOUT A REFERENCE CLOCK appearing in the Official Gazette of September 16, 2003 should be deleted since no patent was granted."

Karen Creasy

Karen Creasy
Petitions Examiner
Office of Petitions
Office of the Deputy Commissioner
for Patent Examination Policy

cc: Geraldine Dozier, Crystal Park 3-441 (FAX-306-2737)
Deneise Boyd, Crystal Park 2, Suite 1100 (FAX-308-5413)
Mary Louise McAskill, Crystal Park 3-910 (FAX 305-4372)
Niomi Farmer, Crystal Park 3-910 (FAX-305-4372)
Mary E. Johnson (Cookie), P/OCS, CM1-6D07
Duane Davis, P/OCS, CM1-6A07
Tamara Greene, Crystal Park 3-908

UNITED STATES PATENT AND TRADEMARK OFFICE

COMMISSIONER FOR PATENTS
UNITED STATES PATENT AND TRADEMARK OFFICE
P.O. BOX 1450
ALEXANDRIA, VA 22313-1450
www.uspto.gov

Paper No. 11

CALFEE, HALTER & GRISWOLD, LLP
800 SUPERIOR AVENUE
SUITE 1400
CLEVELAND OH 44114

COPY MAILED

DEC 1 1 2003

OFFICE OF PETITIONS

ON PETITION

In re Application of
SHUTIC et al.
Application No. 09/888,679
Filed: June 25, 2001
Attorney Docket No. 11694/04112

This is a decision on the petition under 37 CFR 1.137(a), which is being treated as 37 CFR 1.181, filed September 26, 2003, to withdraw the holding of abandonment.

The petition is **granted**.

This application became abandoned for failure to respond to the Restriction Requirement mailed on February 11, 2003, which set a shortened statutory period of one (1) month to reply. Accordingly, this application became abandoned on March 12, 2003. The present petition precedes the mailing of a Notice of Abandonment.

Petitioners assert that the delay was caused by nonreceipt of the Restriction Requirement of February 11, 2003. In support of petitioners' assertions of nonreceipt of the Restriction Requirement, petitioners submitted a statement from practitioner, Douglas B. McKnight, stating that he searched the file jacket and docket records and determined that the Office action was not received. Additionally, petitioners submitted a statement from Tammy Bunch, the docket clerk, setting forth the procedure of docketing communications from the United States Patent and Trademark Office, as well as descriptions of the events regarding the nonreceipt of the Restriction Requirement. Ms. Bunch included a copy of the docket records, which reflected where the Restriction Requirement would have been entered had it been received.

Based on the facts as set forth in the petition, the holding of the abandonment is **withdrawn**. Accordingly, no petition fee is required. The $110.00 petition fee will be refunded to Deposit Account No. 03-0172.

The application file is being forwarded to Technology Center 3700.

Telephone inquiries should be directed to the undersigned at (703) 306-5589.

Christina T. Donnell
Christina Tartera Donnell
Senior Petitions Attorney

UNITED STATES PATENT AND TRADEMARK OFFICE

Commissioner for Patents
United States Patent and Trademark Office
P.O. Box 1450
Alexandria, VA 22313-1450
www.uspto.gov

TRASK BRITT
P.O. BOX 2550
SALT LAKE CITY, UT 84110

COPY MAILED

MAY 23 2006

OFFICE OF PETITIONS

In re Application of :
Phillip E. Byrd :
Application No. 09/888,689 :
Filed: June 25, 2001 :
Attorney Docket No. 4715US(00-1057) :

ON PETITION

This is a decision on the petition, filed May 12, 2006, under 37 CFR 1.313(c)(2) to withdraw the above-identified application from issue after payment of the issue fee.

The petition is **GRANTED**.

The above-identified application is withdrawn from issue for consideration of a submission under 37 CFR 1.114 (request for continued examination). See 37 CFR 1.313(c)(2).

Petitioner is advised that the issue fee paid on December 9, 2004 in the above-identified application cannot be refunded. If, however, the above-identified application is again allowed, petitioner may request that it be applied towards the issue fee required by the new Notice of Allowance.[1]

Telephone inquiries should be directed to the undersigned at (571) 272-3208.

The examiner of Technology Center AU 3729 will consider the request for continued examination under 37 CFR 1.114.

Karen Creasy
Petitions Examiner
Office of Petitions

---

[1] The request to apply the issue fee to the new Notice may be satisfied by completing and returning the new Issue Fee Transmittal Form PTOL-85(b), which includes the following language thereon: "Commissioner for Patents is requested to apply the Issue Fee and Publication Fee (if any) or re-apply any previously paid issue fee to the application identified above." Petitioner is advised that, whether a fee is indicated as being due or not, the Issue Fee Transmittal Form **must** be completed and timely submitted to avoid abandonment. Note the language in bold text on the first page of the Notice of Allowance and Fee(s) Due (PTOL-85).

UNITED STATES PATENT AND TRADEMARK OFFICE

Commissioner for Patents
United States Patent and Trademark Office
P.O. Box 1450
Alexandria, VA 22313-1450
www.uspto.gov

FERENCE & ASSOCIATES
409 BROAD STREET
PITTSBURGH, PA 15143

COPY MAILED

JUL 29 2005

OFFICE OF PETITIONS

In re Application of :
Elias Bergan, et al. :
Application No. 09/888,699 :
Filed: June 24, 2001 :
Attorney Docket No. CH920000026US1 (590.060) :

ON PETITION

This is a decision on the petition under 37 CFR 1.137(b), filed July 5, 2005, to revive the above-identified application.

The petition is **GRANTED.**

37 CFR 1.137(b)(3) requires a statement that the entire delay in filing the required reply from the due date for the reply until the filing of a grantable petition pursuant to 37 CFR 1.137(b) was unintentional. If the statement contained in the instant petition varies from the language required by 37 CFR 1.137(b)(3), it will be interpreted as the required statement. Petitioner must notify the Office if this is **not** a correct interpretation of the statement contained in the instant petition.

The petition satisfies the conditions for revival pursuant to the provisions of 37 CFR 1.137(b) in that (1) the reply in the form of payment of the issue fee; (2) the petition and publication fees; and (3) an adequate statement of unintentional delay.

The Office acknowledges receipt of the issue fee, which was submitted with the petition.

Telephone inquiries concerning this decision should be directed to the undersigned at (571) 272-3229.

This application matter is being forwarded to the Publishing Division to be processed into a patent.

Retta Williams

Retta Williams
Petitions Examiner
Office of Petitions
Office of the Deputy Commissioner
for Patent Examination Policy

UNITED STATES PATENT AND TRADEMARK OFFICE

Commissioner for Patents
United States Patent and Trademark Office
P.O. Box 1450
Alexandria, VA 22313-1450
www.uspto.gov

WOODCOCK WASHBURN LLP
ONE LIBERTY PLACE - 46TH FLOOR
PHILADELPHIA PA 19103

COPY MAILED
MAY 0 3 2006
OFFICE OF PETITIONS

In re Application of	:	
Malik, Dale W.	:	DECISION ON PETITION
Application No. 09/888,718	:	TO WITHDRAW
Filed: June 25, 2001	:	FROM RECORD
Attorney Docket No. BELL-0105/01031	:	

This is a decision on the Request to Withdraw as attorney or agent of record under 37 C.F.R. § 1.36(b), filed August 9, 2005.

The request is **NOT APPROVED** as moot.

A review of the file record indicates that the power of attorney to Jonathan M. Waldman and the attorneys associated with Customer Number 38952 was revoked by the assignee of the patent application. Accordingly, the request to withdraw under 37 C.F.R. § 1.36(b) is moot.

All future communications from the Office will continue to be directed to the below-listed address until otherwise notified by applicant.

Telephone inquires concerning this decision should be directed to Petitions Examiner Liana Chase at 571-272- 3206.

David Bucci
Petitions Examiner
Office of Petitions

cc: WITHERS & KEYS FOR BELL SOUTH
P. O. BOX 71355
MARIETTA GA 30007-1355

UNITED STATES PATENT AND TRADEMARK OFFICE

COMMISSIONER FOR PATENTS
UNITED STATES PATENT AND TRADEMARK OFFICE
P.O. BOX 1450
ALEXANDRIA, VA 22313-1450
www.uspto.gov

Paper No. 6

Commanding Officer
Office of Patent Counsel Code D0012
Spawarsyscen San Diego
53510 Silvergate Avenue, Room 103
San Diego, CA 92152-5765

COPY MAILED

MAR 0 4 2004

OFFICE OF PETITIONS

In re Application of
Pamela A. Boss, et. al.
Application No. 09/888,737
Filed: June 25, 2001
Attorney Docket No. 82433

ON PETITION

This is a decision on the petition under 37 CFR 1.137(b), filed February 20, 2004, to revive the above-identified application.

The above-identified application became abandoned for failure to reply in a timely manner to the Notice to File Corrected Application Papers (Notice) mailed August 1, 2001. The Notice set a period for reply of two (2) months from the mail date of the Notice. No extensions of time under the provisions of 37 CFR 1.136(a) were obtained. Accordingly, the above-identified application became abandoned after midnight October 1, 2001. A notice of abandonment was mailed February 2, 2004.

In response to the Notice to File Corrected Application Papers, petitioner submitted with the instant petition $1,330 for the petition to revive fee, and two (2) sheets of drawings containing Figures 1-3.

37 CFR 1.137(b)(3) requires a statement that the entire delay in filing the required reply from the due date for the reply until the filing of a grantable petition pursuant to 37 CFR 1.137(b) was unintentional. Since the statement contained in the instant petition varies from the language required by 37 CFR 1.137(b)(3), the statement is being construed as the statement required by 37 CFR 1.137(b)(3) and petitioner must notify the Office if this is **not** a correct interpretation of the statement.

Since the requirements for a grantable petition have been met, the petition is **GRANTED**.

The application file is being forwarded to the Office of Initial Patent Examination for further processing.

Telephone inquiries concerning this decision should be directed to Andrea Smith at (703) 308-6711.

Andrea Smith
Petitions Examiner
Office of Petitions
Office of the Deputy Commissioner
for Patent Examination Policy

UNITED STATES PATENT AND TRADEMARK OFFICE

UNITED STATES DEPARTMENT OF COMMERCE
United States Patent and Trademark Office
Address: COMMISSIONER FOR PATENTS
P.O. Box 1450
Alexandria, Virginia 22313-1450
www.uspto.gov

CHOATE, HALL & STEWART LLP
Two International Place
Boston,, MA 02110

Mail Date: 04/21/2010

Applicant	: Yonina C. Eldar	: DECISION ON REQUEST FOR
Patent Number	: 7636403	: RECALCULATION of PATENT
Issue Date	: 12/22/2009	: TERM ADJUSTMENT IN VIEW
Appliction No	: 09/888,762	: OF WYETH AND NOTICE OF INTENT TO
Filed	: 06/25/2001	: ISSUE CERTIFICATE OF CORRECTION
		:

The Request for Recalculation is **GRANTED** to the extent indicated.

The patent term adjustment has been determined to be **685** days. The USPTO will *sua sponte* issue a certificate of correction reflecting the amount of PTA days determined by the recalculation.

Prior to the issuance of the certificate of correction, the USPTO will afford patentee an opportunity to be heard and request reconsideration. Accordingly, patentee has **one month or thirty (30) days**, whichever is longer, to file a request for reconsideration of this patent term adjustment calculation. See 35 U.S.C. 154(b)(3)(B)(ii) and 37 CFR 1.322(a)(4). No extensions of time will be granted under 37 CFR 1.136.

Patentee should use document code PET.OP if electronically filing a request for reconsideration of this patent term adjustment calculation. The patentee must also include the information required by 37 CFR 1.705(b)(2) and the fee required by 37 CFR 1.18(e). If patentee does not file a timely request for reconsideration of this patent term adjustment calculation including the information required by 37 CFR 1.705(b)(2) and the fee required by 37 CFR 1.18(e), the USPTO will issue a certificate of correction reflecting the PTA determination noted above.

Patentee should be aware that in order to preserve the right to review in the United States District Court for the District of Columbia of the USPTO patent term adjustment determination, patentee must ensure that he or she also take the steps required under 35 U.S.C. 154(b)(4)(A) in a timely manner. Nothing in the request for recalculation should be construed as providing an alternative time frame for commencing a civil action under 35 U.S.C. 154(b)(4)(A).

Any questions concerning this decision should be directed to the Office of Patent Legal Administration at 571-272-7702.

UNITED STATES PATENT AND TRADEMARK OFFICE

Commissioner for Patents
United States Patent and Trademark Office
P.O. Box 1450
Alexandria, VA 22313-1450
www.uspto.gov

BASF BEAUTY CARE SOLUTIONS FRANCE
100 CAMPUS DRIVE
FLORHAM PARK, NJ 07932

COPY MAILED
FEB 04 2010

In re Application of
Eric Perrier, et al.
Application No. 09/888,824
Filed: June 25, 2001
Attorney Docket No. 5219 US

ON PETITION

This is a decision in response to the petition, filed November 13, 2009, to revive the above-identified application under the provisions of 37 CFR 1.137(b).

The petition is **GRANTED**.

The application became abandoned for failure to reply in a timely manner to the non-final Office action mailed September 21, 2007, which set a shortened statutory period for reply of three (3) months. No extension of time under the provisions of 37 CFR 1.136(a) was obtained. Accordingly, the application became abandoned on December 22, 2007. A Notice of Abandonment was mailed on April 2, 2008. On November 13, 2009, the present petition was filed.

The petition satisfies the requirements of 37 CFR 1.137(b) in that petitioner has supplied (1) the reply in the form of amendment; (2) the petition fee of $1,620; and (3) an adequate statement of unintentional delay[1].

The application file does not indicate a change of address has been filed in this case, although the address given on the petition differs from the address of record. If appropriate, a change of address should be filed in this case in accordance with MPEP 601.03. A courtesy copy of this decision is being mailed to the address noted on the petition. However, until otherwise instructed, all future correspondence regarding this application will be mailed solely to the address of record.

The application is being referred to Technology Center AU 1651 for appropriate action by the Examiner in the normal course of business on the amendment received November 13, 2009.

[1] 37 CFR 1.137(b)(3) requires a statement that the entire delay in filing the required reply from the due date for the reply until the filing of a grantable petition pursuant to 37 CFR 1.137(b) was unintentional. While it is not apparent whether the person signing the statement of unintentional delay was in a position to have firsthand or direct knowledge of the facts and circumstances of the delay at issue, such statement is being treated as having been made as the result of a reasonable inquiry into the facts and circumstances of such delay. See 37 CFR 10.18(b) and Changes to Patent Practice and Procedure; Final Rule Notice, 62 Fed. Reg. 53131, 53178 (October 10, 1997), 1203 Off. Gaz. Pat. Office 63, 103 (October 21, 1997). In the event that such an inquiry has not been made, petitioner must make such an inquiry. If such inquiry results in the discovery that it is not correct that the entire delay in filing the required reply from the due date for the reply until the filing of a grantable petition pursuant to 37 CFR 1.137(b) was unintentional, petitioner must notify the Office.

Telephone inquiries concerning this decision should be directed to the undersigned at (571) 272-3204. Inquiries relating to further prosecution should be directed to the Technology Center.

Sherry D. Brinkley
Petitions Examiner
Office of Petitions

cc: FRANK CHAU
F. CHAU & ASSOCIATES, LLC
130 WOODBURY ROAD
WOODBURY, NY 11797

UNITED STATES PATENT AND TRADEMARK OFFICE

UNITED STATES DEPARTMENT OF COMMERCE
United States Patent and Trademark Office
Address: COMMISSIONER FOR PATENTS
P.O. Box 1450
Alexandria, Virginia 22313-1450
www.uspto.gov

TOWNSEND AND TOWNSEND AND CREW LLP/ORACLE
TWO EMBARCADERO CENTER
8TH FLOOR
SAN FRANCISCO, CA 94111-3834

Mail Date: 04/21/2010

Applicant	: Kiran Bellare	: DECISION ON REQUEST FOR
Patent Number	: 7584118	: RECALCULATION of PATENT
Issue Date	: 09/01/2009	: TERM ADJUSTMENT IN VIEW
Appliction No	: 09/888,850	: OF WYETH AND NOTICE OF INTENT TO
Filed	: 06/25/2001	: ISSUE CERTIFICATE OF CORRECTION
		:

The Request for Recalculation is **GRANTED** to the extent indicated.

The patent term adjustment has been determined to be **1450** days. The USPTO will *sua sponte* issue a certificate of correction reflecting the amount of PTA days determined by the recalculation.

Prior to the issuance of the certificate of correction, the USPTO will afford patentee an opportunity to be heard and request reconsideration. Accordingly, patentee has **one month or thirty (30) days**, whichever is longer, to file a request for reconsideration of this patent term adjustment calculation. See 35 U.S.C. 154(b)(3)(B)(ii) and 37 CFR 1.322(a)(4). No extensions of time will be granted under 37 CFR 1.136.

Patentee should use document code PET.OP if electronically filing a request for reconsideration of this patent term adjustment calculation. The patentee must also include the information required by 37 CFR 1.705(b)(2) and the fee required by 37 CFR 1.18(e). If patentee does not file a timely request for reconsideration of this patent term adjustment calculation including the information required by 37 CFR 1.705(b)(2) and the fee required by 37 CFR 1.18(e), the USPTO will issue a certificate of correction reflecting the PTA determination noted above.

Patentee should be aware that in order to preserve the right to review in the United States District Court for the District of Columbia of the USPTO patent term adjustment determination, patentee must ensure that he or she also take the steps required under 35 U.S.C. 154(b)(4)(A) in a timely manner. Nothing in the request for recalculation should be construed as providing an alternative time frame for commencing a civil action under 35 U.S.C. 154(b)(4)(A).

Any questions concerning this decision should be directed to the Office of Patent Legal Administration at 571-272-7702.

SPE RESPONSE FOR CERTIFICATE OF CORRECTION 6937879

Paper No.:20060825

DATE : August 25, 2006

TO SPE OF : ART UNIT 2617

SUBJECT : Request for Certificate of Correction on Patent No.: 09888882

A response is requested with respect to the accompanying request for a certificate of correction.

Please complete this form and return with file, within **7** days to:
Certificates of Correction Branch - PK 3-910
Palm location **7590** - Tel. No. 305-8201

With respect to the change(s) requested, correcting Office and/or Applicant's errors, should the patent read as shown in the certificate of correction? No new matter should be introduced, nor should the scope or meaning of the claims be changed.

ARG

Thank You For Your Assistance **Certificates of Correction Branch**

The request for issuing the above-identified correction(s) is hereby:
Note your decision on the appropriate box.

☒ **Approved** **All** changes apply.

☐ **Approved in Part** Specify below which changes **do not** apply.

☐ **Denied** State the reasons for denial below.

Comments:

NICK CORSARO
PRIMARY EXAMINER
SPE AU 2617

Nick Corsaro

SPE: Nick Corsaro **Art Unit** 2617

#4 Pet. Granted

UNITED STATES DEPARTMENT OF COMMERCE
Patent and Trademark Office
Address: COMMISSIONER OF PATENTS AND TRADEMARKS
Washington, D.C. 20231

SERIAL NUMBER	REQUEST DATE	FIRST NAMED APPLICANT	ATTORNEY DOCKET NO.
09/888,897	**8/3/01**	**WILLIAM L. ELDERSON**	**010214**

Title: **BRIDGING SYSTEM FOR OFF-MODULE STUDS**

Art Unit	Paper Number

Correspondence Address:
THOMAS J. EDGINGTON
KIRKPATRICK & LOCKHART
HENRY W. OLIVER BUILDING
535 SMITHFIELD, STREET
PITTSBURGH, PA 15222-2312

Licensee under 35 U.S.C. 184 is hereby granted to file in any foreign country a patent application and any amendments thereto corresponding to the subject matter of this U.S. application identified above and/or any material accompanying the petition. This license is conditioned upon modification of any applicable secrecy order and is subject to revocation without notice.

License Number: 527,326
Grant Date: 06-Aug-01

Approved:
for Commissioner of Patents and Trademarks

This license empowers the filing, the causation and the authorization of the filing of a foreign application or applications on the subject matter identified above, subsequent forwarding of all duplicate and formal papers and the prosecution of such aplication or applications.

This license is granted under 37 CFR 5.15(a)

This license is to be retained by the licensee and may be used at anytime on or after the date thereof. This license is not retroactive unless specifically indicated.

The grant of this license does not in any way lesson the responsibility of the licensee for the security of the subject matter as imposed by any Government contract or the provisions of existing laws relating to espionage and the national security or the export of technical data. Licensees should apprise themselves of current regulations, especially with respecct to certain countries, of other agencies, particularly the Department of the Treasury; Office of Munitions Control, Department of State (with respect to Arms, Munitions and Implements of War); the Bureau of Trade Regulation, Office of Export Adminstration, Department of Commerce; and the Department of Energy.

LICENSE FOR FOREIGN FILING

[Title 35, United States Code (1952) S ctions 184, 185, 186]

UNITED STATES PATENT AND TRADEMARK OFFICE

COMMISSIONER FOR PATENTS
UNITED STATES PATENT AND TRADEMARK OFFICE
WASHINGTON, D.C. 20231
www.uspto.gov

Paper No. 8

ROSENMAN & COLIN
575 MADISON AVENUE
15TH FLOOR
NEW YORK, NY 10022-2585

COPY MAILED

DEC 1 2 2002

OFFICE OF PETITIONS

In re Application of
Norihiro Iwai et al
Application No. 09/888,930
Filed: June 25, 2001
Attorney Docket No. SOH 14.569A

ON PETITION

This is a decision on the petition under 37 CFR 1.137(b), filed November 13, 2002, to revive the above-identified application.

The petition is **GRANTED**.

The above-identified application became abandoned for failure to submit the issue fee and formal drawings in a timely manner in reply to the Notice of Allowance and Notice of Allowability mailed October 23, 2001, which set a statutory period for reply of three (3) months. Accordingly, the above-identified application became abandoned on January 24, 2002.

37 CFR 1.137(b)(3) requires a statement that the entire delay in filing the required reply from the due date for the reply until the filing of a grantable petition pursuant to 37 CFR 1.137(b) was unintentional. If the statement contained in the instant petition varies from the language required by 37 CFR 1.137(b)(3), the statement contained in the instant petition is being construed as the statement required by 37 CFR 1.137(b)(3) and petitioner must notify the Office if this is **not** a correct interpretation of the statement contained in the instant petition.

Pursuant to petitioner's authorization, Deposit Account No. 50-1290 was charged $1,280.00 for the petition to revive an unintentionally abandoned application.

Telephone inquiries concerning this decision should be directed to Wan Laymon at (703) 305-9282.

The application file is being forwarded to Publishing Division.

Wan Laymon

Wan Laymon
Petitions Examiner
Office of Petitions
Office of the Deputy Commissioner
for Patent Examination Policy

UNITED STATES PATENT AND TRADEMARK OFFICE

Commissioner for Patents
United States Patent and Trademark Office
Washington, D.C. 20231
www.uspto.gov

Paper No. 08312005

Craig A. Fieschko
DEWITT ROSS & STEVENS, S.C.
Firstar Financial Center
8000 Excelsior Drive Suite 401
Madison, WI 53717-1914

SEP - 8 2005

In re Application of	)	
Gribb	)	
Application No. 09/888,940	)	DECISION ON PETITION
Filed: 6/25/2001	)	
For: Delay Line Anodes	)	
	)	

This is a decision on the petition, filed July 7, 2005 under 37 CFR 1.181, to invoke the supervisory authority of the Commissioner to review the examiner's action of May 16, 2005. Petitioner complains that the examiner in charge failed to address the applicant's March 9, 2005 arguments in the Final rejection of May 16, 2005. The petition is **DENIED**.

A review of the application file indicates that the examiner did in fact address the arguments. Reading the office action as a whole, it is clear that the Examiner has clearly set forth a position as to how the Meijer reference teaches the broad language "adaptably mounted in spaced relation to have adjustable spacing therebetween." The Examiner correctly addressed the claims and in the arguments section clearly communicated to the Applicant that the claims are being interpreted in their broadest reasonable interpretation (examiner stated "as broadly claimed"). Neither the March 9, 2005 arguments nor the July 7, 2005 petition uses language that is commensurate in scope with the claim language. For example, the petition language "adjustably respaceable" implies anodes that can be adjusted subsequent to manufacture. The broad language of the claims reads on this, but does not necessarily require this. The Examiner correctly communicated to the Applicant that the Meijer reference is applied "as broadly claimed".

Further, the Examiner addressed the Applicant's arguments by stating "since there is no fix [sic] structure between the anodes, an anode is free to relatively move from the other. In other words the space is can be adjusted." The examiner in the rejection section of the office action on page 3 discusses Meijer in detail and explicitly quotes Meijer who teaches that the distance of the

spacing depends upon the diameter. It is clear therefore, taking the office action as a whole, that the examiner has communicated a position that different diameters achieve different spacings and therefore Meijer teaches the claimed anodes "adaptably mounted in spaced relation to have adjustable spacing therebetween."

Contrary to the petition, the examiner has also provided on page 3 a motivation to combine Meijer with Friedman.

In conclusion, the examiner has set forth a rejection of the claims and given a motivation to combine the references. The office action as a whole addresses Applicant's arguments by communicating the Examiner's position on how the claims are being interpreted and how the art reads on the claims. The status of the application remains under Final rejection awaiting response from Applicant on the merits to the rejection.

Arthur Grimley, Director
Technology Center 2800
571-272-1750

UNITED STATES PATENT AND TRADEMARK OFFICE

Commissioner for Patents
United States Patent and Trademark Office
P.O. Box 1450
Alexandria, VA 22313-1450
www.uspto.gov

MERCHANT & GOULD PC
P.O. BOX 2903
MINNEAPOLIS MN 55402-0903

COPY MAILED

JAN 3 1 2005

OFFICE OF PETITIONS

In re Patent No. 6,780,570	:	
Issue Date: August 24, 2004	:	
Application No. 09/888,989	:	LETTER
Filed: June 25, 2001	:	
Attorney Docket No. 9680.173USU1	:	

This is in response to the communication received in the Office of Petitions on January 21, 2005[1], which is being treated as a request under 37 CFR 1.27(g)(2) to remove status as a Small Entity.

Status as a Small Entity has been removed.

This patented file is being referred to the Files Repository.

Inquiries related to this communication should be directed to the Office of Petitions Staff at (571) 272-3201.

Andrea Smith
Petitions Examiner
Office of Petitions
Office of the Deputy Commissioner
for Patent Examination Policy

[1]The Communication contained a Certificate of Mailing under 37 CFR 1.8, dated January 4, 2004.

UNITED STATES PATENT AND TRADEMARK OFFICE

UNITED STATES DEPARTMENT OF COMMERCE
United States Patent and Trademark Office
Address: COMMISSIONER FOR PATENTS
P.O. Box 1450
Alexandria, Virginia 22313-1450
www.uspto.gov

MICHAEL BEST & FRIEDRICH LLP
100 E WISCONSIN AVENUE
Suite 3300
MILWAUKEE, WI 53202

Mail Date: 04/23/2010

Applicant	: Andrew Joseph Keogh	: DECISION ON REQUEST FOR
Patent Number	: 7666460	: RECALCULATION of PATENT
Issue Date	: 02/23/2010	: TERM ADJUSTMENT IN VIEW
Appliction No	: 09/889,019	: OF WYETH
Filed	: 11/30/2001	:
		:

The Patentee's Request for Recalculation is **DISMISSED.**

This Request is deemed ineligible for consideration for one or more of the following reasons:

(A). The patent for which PTA recalculation is requested is either a design or reissue application or is a reexamination proceeding;

(B). The patent for which PTA recalculation is requested resulted from a utility or plant application filed under 35 USC 111(a) before May 29, 2000 and no CPA filed in the application on/after May 29, 2000;

(C). The patent for which PTA recalculation is requested resulted from an international application in which the international filing date was before May 29, 2000 and no CPA filed in the application on/after May 29, 2000;

(D). The patent for which PTA recalculation is requested issued on/after March 2, 2010;

(E). The Request for Recalculation was filed more than 180 days after the grant date of the patent and the request was not filed within two months of a dismissal of a request for reconsideration of the of the patent term under 37 CFR 1.705(d);

(F). The Request for Recalculation is not solely limited to USPTO pre-Wyeth interpretation of 35 U.S.C. 154(b)(2)(A);

or

(G). A civil action was filed pursuant to 35 U.S.C. 154(b)(4)(A)concerning the same patent at issue in this request.

Patentee may file a reply to this decision dismissing the Request for Recalculation. Patentee must file such reply within one month or thirty days, whichever is longer, of the mail date of the decision dismissing the Request for Recalculation. No fee is required if patentee is asserting in the reply that the dismissal for ineligibility is improper.

Patentee should use document code PET.OP if electronically filing a reply to this dismissal. If the USPTO finds that the request was improperly deemed ineligible, the USPTO will mail applicant a recalculation determination.

Patentee should be aware that in order to preserve the right to review in the United States District Court for the District of Columbia of the USPTO patent term adjustment determination, patentee must ensure that he or she also take the steps required under 35 U.S.C. 154(b)(4)(A). Nothing in the request for recalculation should be construed as providing an alternative time frame for commencing a civil action under 35 U.S.C. 154 (b)(4)(A).

Any questions concerning this decision should be directed to the Office of Patent Legal Administration at 571-272-7702.

UNITED STATES PATENT AND TRADEMARK OFFICE

UNITED STATES DEPARTMENT OF COMMERCE
United States Patent and Trademark Office
Address: COMMISSIONER FOR PATENTS
P.O. Box 1450
Alexandria, Virginia 22313-1450
www.uspto.gov

APPLICATION NO.	FILING DATE	FIRST NAMED INVENTOR	ATTORNEY DOCKET NO.	CONFIRMATION NO.
09/889,022	03/25/2002	Toshihiro Morita	275729US6PCT	4603

22850 7590 09/08/2008
OBLON, SPIVAK, MCCLELLAND MAIER & NEUSTADT, P.C.
1940 DUKE STREET
ALEXANDRIA, VA 22314

EXAMINER
GARG, YOGESH C

ART UNIT	PAPER NUMBER
3625	

NOTIFICATION DATE	DELIVERY MODE
09/08/2008	ELECTRONIC

Please find below and/or attached an Office communication concerning this application or proceeding.

The time period for reply, if any, is set in the attached communication.

Notice of the Office communication was sent electronically on above-indicated "Notification Date" to the following e-mail address(es):

patentdocket@oblon.com
oblonpat@oblon.com
jgardner@oblon.com

UNITED STATES PATENT AND TRADEMARK OFFICE

Commissioner for Patents
United States Patent and Trademark Office
P.O. Box 1450
Alexandria, VA 22313-1450
www.uspto.gov

Bradley D. Lytle
OBLON, SPIVAK, MCCLELLAND MAIER
& NEUSTADT, P.C.
1940 DUKE STREET
ALEXANDRIA VA 22314

MAILED
FROM DIRECTORS OFFICE

SEP 0 5 2008

TECHNOLOGY CENTER 3600

In re Application of:
TOSHIHIRO MORITA, et al.
Application No. 09/889,022
Attorney Docket No.: 275729US6PCT
Filed: March 25, 2002
For: INFORMATION PROCESSOR AND PROCESSING METHOD, AND INFORMATION STORAGE MEDIUM

DECISION ON PETITION FILED UNDER 37 C.F.R. 1.181

This is in response to Applicant's petition filed August 18, 2008 to compel the Examiner to consider references "AS" and "AT" filed with the Information Disclosure Statement (IDS) of July 10, 2001.

The petition alleges that the IDS filed July 10, 2001 is in compliance with 37 CFR 1.97 and 1.98, and particularly is in compliance with 37 CFR 1.98(a)(3) since the references cited therein were listed as being relevant on the International Search Report.

The petition is **GRANTED.**

History

A review of the file reveals that the Examiner has denied consideration of references "AS" and "AT" and reasoned that the IDS had failed to comply with 37 CFR 1.98(a)(3) because Applicant had failed to provide a concise explanation of the relevance of these references (see Office correspondence mailed July 1, 2008). It is noted that the provided copies of references "AS" and "AT" were in a non-English language.

Authority

37 CFR 1.98(a)(3) may be satisfied by the provision of:
"[a] concise explanation of the relevance, as it is presently understood by the individual designated in § 1.56(c) most knowledgeable about the content of the information, of each patent,

publication, or other information listed that is not in the English language. The concise explanation may be either separate from applicant's specification or incorporated therein." (37 CFR 1.98(a)(3)(i)).

Further, MPEP 609.04(a)(III) states:
"Where the information listed is not in the English language, but was cited in a search report or other action by a foreign patent office in a counterpart foreign application, the requirement for a concise explanation of relevance can be satisfied by submitting an English-language version of the search report or action which indicates the degree of relevance found by the foreign office. This may be an explanation of which portion of the reference is particularly relevant, to which claims it applies, or merely an "X", "Y", or "A" indication on a search report." (emphasis added)

Discussion

A review of the file reveals that the IDS filed July 10, 2001 included an English-language version of International Search Report (ISR) for International application No. PCT/JP00/07973 (the International application from which this National Stage application takes priority). Such ISR listed both references identified as "AS" and "AT" in the IDS filed July 10, 2001 and included at least an "X", "Y", or "A" indication associated with each. The IDS further included legible copies of each of these references and a statement that "[the enclosed copies of the cited publications were] cited in the International Search Report of International Application No. PCT/JP00/07973". Accordingly, the IDS is in compliance with 37 CFR 1.98(a)(3)(i).

It is also noted (upon a thorough review of the file) that the IDS filed July 10, 2001 is fully compliant with 37 CFR 1.97 and 1.98.

Summary:

The petition is **GRANTED**.

The file has been electronically forwarded to the Examiner for consideration of references "AS" and "AT" filed with the IDS of July 10, 2001 and for any further action consistent with this decision.

Any questions dealing with this decision should be directed to Jeffrey A. Smith at (571) 272-6763.

Wynn Coggins, Director
Patent Technology Center 3600
(571)-272-5350

WC/jas:08/25/08

TL

UNITED STATES PATENT AND TRADEMARK OFFICE

Commissioner for Patents
United States Patent and Trademark Office
P. O. Box 1450
Alexandria, VA 22313-1450
www. uspto. gov

Paper No. 11

William S Frommer
Frommer Lawrence & Haug
745 Fifth Avenue
New York, NY 10151

COPY MAILED

NOV 15 2004

OFFICE OF PETITIONS

In re Application of
Toshihiro Morita, et al.
Application No. 09/889,023
Filed: January 10, 2002
Attorney Docket No. 450101-02844

ON PETITION

This is a decision on the petition, filed September 14, 2004, to revive the above-identified application under the provisions of 37 CFR 1.137(b).

The application became abandoned for a failure to reply in a timely manner to the non-final Office action mailed January 30, 2004. A Notice of Abandonment was mailed on September 7, 2004.

The petition is found to comply with the requirements of 37 CFR 1.137(b). Accordingly, the petition is **GRANTED**.

Telephone inquiries concerning this decision may be directed to the undersigned at (571) 272-3204. All other inquiries regarding this application should be directed to the Technology Center.

The application file is being forwarded to Technology Center AU 2171 for consideration of the response filed September 14, 2004.

Sherry D. Brinkley
Petitions Examiner
Office of Petitions
Office of the Deputy Commissioner
for Patent Examination Policy

UNITED STATES PATENT AND TRADEMARK OFFICE

Commissioner for Patents
United States Patent and Trademark Office
Washington, D.C. 20231
www.uspto.gov

OCT 03 2001

Corporate Patent Counsel
Philips Electronics North America Corporation
580 White Plains Road
Tarrytown, NY 10591

In re Application of HIRANO et al	:	
U.S. Application No.: 09/889,088	:	
Int. Application No.: PCT/EP00/11288	:	DECISION
Int. Filing Date: 10 November 2000	:	
Priority Date: 12 November 1999	:	
Attorney Docket No.: PHJP000026 US	:	
For: LIQUID CRYSTAL DISPLAY DEVICE	:	

This is in response to the papers filed 11 July 2001, which is being treated as a request for status under 37 CFR 1.42.

BACKGROUND

On 10 November 2000, applicants filed international application PCT/EP00/11288, which claimed priority of an earlier Japan application filed 12 November 1999. A copy of the international application was communicated to the USPTO from the International Bureau on 25 May 2001. The twenty-month period for paying the basic national fee in the United States expired at midnight on 12 July 2001.

On 11 July 2001, applicants filed national stage papers in the United States. The submission was accompanied by, *inter alia*, authorization to charge the basic national fee required by 35 U.S.C. 371(c)(1) and a declaration signed by three of the four joint inventors and also signed by the legal representative of inventor Takeo Kamiya, who according to the declaration is deceased.

DISCUSSION

37 CFR 1.42 provides, "In case of the death of the inventor, the legal representative (executor, administrator, etc.) of the deceased inventor may make the necessary oath or declaration, and apply for and obtain the patent."

Effective 07 November 2000, 37 CFR 1.497(b)(2) specifies that, where a person making the declaration is the legal representative of a deceased inventor, the declaration shall state the following: (1) the relationship of the person to the inventor, (2) the facts the inventor would have been required to state, upon information and belief, (3) that the person is the legal representative of the deceased inventor, and (4) the citizenship, residence, and mailing address of the legal representative.

In the present case, the declaration filed 11 July 2001 is not in full compliance with 37 CFR 1.497(b)(2). It is further noted that the name of the fourth inventor is listed as "Shuji Hagino" in the declaration but is listed as "Hagino Shuji" in the international application. In the event the information in the international application is incorrect, a proper petition under 37 CFR 1.182 and the requisite $130.00 petition fee must be filed. Such a petition must be accompanied by statements from the inventor and any other persons having firsthand knowledge of the error. These statements must set forth the specific circumstances as to how and when the error was made and discovered and must also set forth that the mistake was an inadvertent error without deceptive intent.

CONCLUSION

For the reasons above, the request for status is DISMISSED without prejudice.

A proper response must be filed within TWO (2) MONTHS from the mail date of this decision. Failure to timely file a proper response will result in ABANDONMENT of the application. The response should include a cover letter entitled "Renewed Request for Status Under 37 CFR 1.42" and must include an oath or declaration in compliance with 37 CFR 1.497 and the surcharge set forth in 37 CFR 1.492(e). Extensions of time are available pursuant to 37 CFR 1.136(a).

Please direct further correspondence with respect to this matter to the Commissioner for Patents, Box PCT, Washington, D.C. 20231, and address the contents of the letter to the attention of the PCT Legal Office.

Bryan Tung
PCT Legal Examiner
PCT Legal Office

Telephone: 703-308-6614
Facsimile: 703-308-6459

FEB 0 5 2002

UNITED STATES PATENT AND TRADEMARK OFFICE

Commissioner for Patents
United States Patent and Trademark Office
Washington, D.C. 20231
www.uspto.gov

Corporate Patent Counsel
Philips Electronics North America Corporation
580 White Plains Road
Tarrytown, NY 10591

In re Application of HIRANO et al	:	
U.S. Application No.: 09/889,088	:	
Int. Application No.: PCT/EP00/11288	:	DECISION
Int. Filing Date: 10 November 2000	:	
Priority Date: 12 November 1999	:	
Attorney Docket No.: PHJP000026 US	:	
For: LIQUID CRYSTAL DISPLAY DEVICE	:	

This is in response to the "Renewed Request for Status Under 37 CFR 1.42" and "Petition Under 37 CFR 1.182" filed 17 January 2002.

BACKGROUND

On 10 November 2000, applicants filed international application PCT/EP00/11288, which claimed priority of an earlier Japan application filed 12 November 1999. A copy of the international application was communicated to the USPTO from the International Bureau on 25 May 2001. The twenty-month period for paying the basic national fee in the United States expired at midnight on 12 July 2001.

On 11 July 2001, applicants filed national stage papers in the United States Designated/Elected Office (DO/EO/US). The submission was accompanied by, *inter alia*, authorization to charge the basic national fee required by 35 U.S.C. 371(c)(1), a declaration, and a request for status under 37 CFR 1.42. According to the declaration, joint inventor Takeo Kamiya is deceased.

On 03 October 2001, this Office mailed a decision dismissing the 11 July 2001 request for status on grounds that the declaration is not in full compliance with 37 CFR 1.497(b)(2). The decision also notified applicants of a discrepancy between the fourth inventor's name listed in the international application and the fourth inventor's name listed on the declaration.

On 17 January 2002, applicants filed the present renewed request for status under 37 CFR 1.42, the present petition under 37 CFR 1.182, and a new declaration.

DISCUSSION

I. Renewed Request for Status under 37 CFR 1.42.

37 CFR 1.42 provides, "In case of the death of the inventor, the legal representative (executor, administrator, etc.) of the deceased inventor may make the necessary oath or declaration, and apply for and obtain the patent."

Effective 07 November 2000, 37 CFR 1.497(b)(2) specifies that, where a person making the declaration is the legal representative of a deceased inventor, the declaration shall state the following: (1) the relationship of the person to the inventor, (2) the facts the inventor would have been required to state, upon information and belief, (3) that the person is the legal representative of the deceased inventor, and (4) the citizenship, residence, and mailing address of the legal representative.

In the present case, the declaration filed 17 January 2002 is in compliance with 37 CFR 1.42 and 37 CFR 1.497.

II. Petition under 37 CFR 1.182.

A review of the application file reveals that the name of the fourth inventor is listed as "Shuji Hagino" in the declaration but is listed as "Hagino Shuji" in the international application Applicant has provided a statement by Akihiko Miyazaki, the person with apparent firsthand knowledge of the error, specifying that the error was made by the attorneys who prepared an inventor information sheet. The statement further states that this error was inadvertent and occurred without deceptive intent. Applicants' explanation of the difference in the inventor's name is accepted and noted for the record.

CONCLUSION

For the reasons set forth in §I above, the papers filed 17 January 2002 are ACCEPTED under 37 CFR 1.42.

For the reasons set forth in §II above, the petition under 37 CFR 1.182 is GRANTED.

The surcharge set forth in 37 CFR 1.492(e) and the petition fee set forth in 37 CFR 1.17(h) will be charged to Deposit Account No. 14-1270 per applicants' authorization.

The application has an International Filing Date of 10 November 2000 and a date under 35 U.S.C. 371 of 17 January 2002.

The application is being forwarded to the DO/EO/US for processing in accordance with this decision.

Bryan Tung
PCT Legal Examiner
PCT Legal Office

Telephone: 703-308-6614
Facsimile: 703-308-6459

DEC 0 4 2001

UNITED STATES PATENT AND TRADEMARK OFFICE

COMMISSIONER FOR PATENTS
UNITED STATES PATENT AND TRADEMARK OFFICE
WASHINGTON, D.C. 20231
www.uspto.gov

Jack E. Haken
U.S. Philips Corporation
Intellectual Property Department
580 White Plains Road
Tarrytown, NY 10591

In re Application of	:	
HIRANO, Satoshi, et al.	:	
Application No.: 09/889,090	:	DECISION ON
PCT No.: PCT/EP00/11250	:	
Int. Filing Date: 10 November 2000	:	PAPERS
Priority Date: 12 November 1999	:	
Attorney's Docket No.: PHJ 99.024	:	UNDER 37 CFR 1.42
For: LIQUID CRYSTAL DISPLAY	:	
APPARATUS	:	

This is a decision on the national stage application papers submitted 11 July 2001 for entry into the national stage in the United States of America. A review of the Declaration reveals an indication that the joint inventor Takeo Kamiya is deceased. Applicants' submission of the application papers taken together with the indication that joint inventor Kamiya is deceased has been treated as a request for status under 37 CFR 1.42.

BACKGROUND

On 10 November 2000, applicants filed international application PCT/EP00/11250, which claimed a priority date of 12 November 1999. A copy of the international application was communicated to the United States Patent and Trademark Office (USPTO) from the International Bureau on 25 May 2001.

On 11 July 2001, applicants filed a submission for entry into the national stage in the United States which was accompanied by, *inter alia*, the U.S. Basic National Fee and a declaration signed by the joint inventors, which included an indication that joint inventor Takeo Kamiya is deceased.

DISCUSSION

Under 35 U.S.C. §117, legal representatives of deceased inventors may make application for patent upon compliance with the requirements and on the same terms and conditions applicable to the inventor. The "legal representative (executor, administrator, etc.) of the deceased inventor may make the necessary oath or declaration, and apply for and obtain the patent." 37 CFR 1.42. As "the terms 'Executor' and 'Administrator do not have exact counterparts in all foreign countries, ... the terms must be construed to fit the circumstances of the case." MPEP 409.01(d). Thus, "the person or persons having authority corresponding to that of

executor or administrator are permitted to make application..." MPEP 409.01(d).

In this case, applicants have provided a power of attorney stating that the heir is appointing an "administrator" to act on behalf of the heir in matters regarding Japanese patent application No. 321,901/99. Executors are appointed by wills, administrators are appointed by courts, and the heir does not have the power to appoint either. The declaration of inventorship must be signed by the legal representative of the deceased inventor. It may not be signed by another appointed as agent for the legal representative on behalf of the legal representative. See MPEP 605.04(a). In the present case, Akihiko Miyazaki is not the legal representative of the deceased inventor, but rather an agent for the heir. As such, execution of the declaration by Akihiko Miyazaki is improper. If there is neither an executor nor an administrator nor is one required to be appointed by applicable law, then the all the heirs may sign as legal representative. MPEP 409.01(a).

Further, under 37 CFR 1.497(b)(2), the declaration must include the residence, mailing address and citizenship of the person(s) signing on behalf of the deceased inventor (in addition to the full name and citizenship of the deceased inventor). Even if Miyazaki had been the legal representative of the deceased inventor, the declaration signed by Miyazaki would not have complied with 37 CFR 1.497(b)(2), as it does not list Miyazaki's residence, mailing address or citizenship.

CONCLUSION

For the above reasons, the request for status under 37 CFR 1.42 is **REFUSED**.

Applicant is required to submit a declaration in compliance with 37 CFR 1.497 and 1.42 within a time period of **TWO (2) MONTHS** from the mail date of this Decision. THIS PERIOD FOR RESPONSE MAY BE EXTENDED UNDER 37 CFR 1.136(a). FAILURE TO PROPERLY RESPOND WILL RESULT IN ABANDONMENT. Any request for reconsideration of this decision should include a cover letter entitled "Renewed Submission Under 37 CFR 1.42."

Please direct any further correspondence with respect to this matter to the Commissioner of Patents and Trademarks, Box PCT, Washington, D.C. 20231, and address the contents of the letter to the attention of the Office of PCT Legal Administration.

Erin M. Pender
Attorney Advisor
PCT Legal Affairs

Boris Milef
PCT Legal Examiner
PCT Legal Affairs

Telephone: (703) 305-0455
Facsimile: (703) 308-6459

FEB 20 2002

UNITED STATES PATENT AND TRADEMARK OFFICE

COMMISSIONER FOR PATENTS
UNITED STATES PATENT AND TRADEMARK OFFICE
WASHINGTON, D.C. 20231
www.uspto.gov

Jack E. Haken
U.S. Philips Corporation
Intellectual Property Department
580 White Plains Road
Tarrytown, NY 10591

In re Application of	:	
HIRANO, Satoshi, et al.	:	
Application No.: 09/889,090	:	DECISION ON
PCT No.: PCT/EP00/11250	:	
Int. Filing Date: 10 November 2000	:	PAPERS
Priority Date: 12 November 1999	:	
Attorney's Docket No.: PHJ 99.024	:	UNDER 37 CFR 1.42
For: LIQUID CRYSTAL DISPLAY	:	
APPARATUS	:	

This is a decision on "Renewed Submission Under 37 CFR 1.42" filed on 30 January 2002.

BACKGROUND

On 10 November 2000, applicants filed international application PCT/EP00/11250, which claimed a priority date of 12 November 1999. A copy of the international application was communicated to the United States Patent and Trademark Office (USPTO) from the International Bureau on 25 May 2001.

On 11 July 2001, applicants filed a submission for entry into the national stage in the United States which was accompanied by, *inter alia*, the U.S. Basic National Fee and a declaration signed by the joint inventors, which included an indication that joint inventor Takeo Kamiya is deceased.

On 04 December 2001, the Office mailed Decision On Papers Under 37 CFR 1.42, refusing applicants' request for status under 37 CFR 1.42.

On 30 January 2002, applicants submitted a new declaration signed by Akira Kamiya for deceased inventor Kamiya Takeo.

DISCUSSION

Under 35 U.S.C. §117, legal representatives of deceased inventors may make application for patent upon compliance with the requirements and on the same terms and conditions applicable to the inventor. The "legal representative (executor, administrator, etc.) of the deceased inventor may make the necessary oath or declaration, and apply for and obtain the

patent." 37 CFR 1.42. Thus, the declaration must comply with both 37 CFR 1.42 and 37 CFR 1.497(a)-(b).

The declaration submitted on 30 January 2002 fails to comply with 37 CFR 1.497(a) as it fails to list each inventor and each inventor's required information in addition to that of the legal representative. The international application lists three inventors, but the new declaration lists only one.

CONCLUSION

For the above reasons, the request for status under 37 CFR 1.42 is **REFUSED**.

Applicant is required to submit a declaration in compliance with 37 CFR 1.497 and 1.42 within a time period of **TWO (2) MONTHS** from the mail date of this Decision. THIS PERIOD FOR RESPONSE MAY BE EXTENDED UNDER 37 CFR 1.136(a). FAILURE TO PROPERLY RESPOND WILL RESULT IN ABANDONMENT. Any request for reconsideration of this decision should include a cover letter entitled "Renewed Submission Under 37 CFR 1.42."

Please direct any further correspondence with respect to this matter to the Commissioner of Patents and Trademarks, Box PCT, Washington, D.C. 20231, and address the contents of the letter to the attention of the Office of PCT Legal Administration.

Erin M. Pender
Attorney Advisor
PCT Legal Administration

Leonard Smith
PCT Legal Examiner
PCT Legal Administration

Telephone: (703) 305-0455
Facsimile: (703) 308-6459

2 DEC 2002

UNITED STATES PATENT AND TRADEMARK OFFICE

COMMISSIONER FOR PATENTS
UNITED STATES PATENT AND TRADEMARK OFFICE
WASHINGTON, D.C. 20231
www.uspto.gov

Jack E. Haken
U.S. Philips Corporation
Intellectual Property Department
580 White Plains Road
Tarrytown, NY 10591

In re Application of	:	
HIRANO, Satoshi, et al.	:	
Application No.: 09/889,090	:	DECISION ON
PCT No.: PCT/EP00/11250	:	
Int. Filing Date: 10 November 2000	:	REQUEST
Priority Date: 12 November 1999	:	
Attorney Docket No.: PHJ 99.024	:	UNDER 37 CFR 1.42
For: LIQUID CRYSTAL DISPLAY	:	
APPARATUS	:	

This is a decision on "Response to Notification," filed on 26 June 2002.

BACKGROUND

On 10 November 2000, applicants filed international application PCT/EP00/11250, which claimed a priority date of 12 November 1999. A copy of the international application was communicated to the United States Patent and Trademark Office (USPTO) from the International Bureau on 25 May 2001.

On 11 July 2001, applicants filed a submission for entry into the national stage in the United States which was accompanied by, *inter alia*, the U.S. Basic National Fee and a declaration signed by the joint inventors, which included an indication that joint inventor Takeo Kamiya is deceased.

On 04 December 2001, the Office mailed Decision On Papers Under 37 CFR 1.42, refusing applicants' request for status under 37 CFR 1.42.

On 30 January 2002, applicants submitted a new declaration signed by Akira Kamiya for deceased inventor Kamiya Takeo.

On 20 February 2002, the Office mailed Decision On Papers Under 37 CFR 1.42, refusing status under 37 CFR 1.42, because the declaration did not comply with 37 CFR 1.497(a)-(b).

On 15 April 2002, applicants resubmitted a copy of the declaration submitted on 11 July 2001.

On 20 May 2002, the Office mailed Notification indicating the 15 April 2002 submission was not a *bona fide* response.

On 26 June 2002, applicants submitted the instant "Response to Notification," along with a petition for a two month extension of time and the fee for a two month extension of time.

DISCUSSION

The declaration submitted on 26 June 2002 satisfies the deficiencies of the initial declaration. The declarations submitted on 11 July 2001 and 26 June 2002 taken together satisfy the requirements of 37 CFR 1.42 and 37 CFR 1.497.

CONCLUSION

For the above reasons, the request for status under 37 CFR 1.42 is **GRANTED**.

The application has an international filing date of 10 November 2000 under 35 U.S.C. §363 and a date of 26 June 2002 under 35 U.S.C. §371. This application is being forwarded to the National Stage Processing Division of the Office of the PCT Operations for continued processing.

Richard Cole
PCT Legal Examiner
PCT Legal Administration

Erin M. Pender
Attorney Advisor
PCT Legal Administration

Telephone: (703) 305-0455
Facsimile: (703) 308-6459

UNITED STATES PATENT AND TRADEMARK OFFICE

COMMISSIONER FOR PATENTS
UNITED STATES PATENT AND TRADEMARK OFFICE
P.O. BOX 1450
ALEXANDRIA, VA 22313-1450
www.uspto.gov

PHILIPS INTELLECTUAL PROPERTY & STANDARDS
P.O. BOX 3001
BRIARCLIFF MANOR, NY 10510

COPY MAILED

JUL 06 2007

OFFICE OF PETITIONS

In re Application of	:	
Satoshi Hirano, et. al.	:	
Application No. 09/889,090	:	ON PETITION
Filed: June 26, 2002	:	
Attorney Docket No. PHJ 99-024	:	

This is a decision on the petition under 37 CFR 1.137(b), filed on June 13, 2007, to revive the above-identified application.

The application became abandoned for failure to timely respond to the Notice of Allowance and Fee(s) Due mailed September 7, 2006. A Notice of Abandonment was mailed on January 8, 2007.

It is not apparent whether the statement of unintentional delay was signed by a person who would have been in a position of knowing that the entire delay in filing the required reply from the due date for the reply until the filing of a grantable petition pursuant to 37 CFR 1.137(b) was unintentional. Nevertheless, in accordance with 37 CFR 10.18, the statement is accepted as constituting a certification of unintentional delay. However, in the event that petitioner has no knowledge that the delay was unintentional, petitioner must make such an inquiry to ascertain that, in fact, the delay was unintentional. If petitioner discovers that the delay was intentional, petitioner must so notify the Office.

There is no indication that the person signing the instant petition was ever given a power of attorney or authorization of agent to prosecute the above-identified application. In accordance with 37 CFR 1.34(a), the signature appearing on the petition shall constitute a representation to the United States Patent and Trademark Office that he/she is authorized to represent the particular party in whose behalf he/she acts. However, if petitioner desires to receive future correspondence regarding this application, the appropriate power of attorney or authorization of agent must be submitted. A courtesy copy of this decision is being mailed to petitioner. Nevertheless, all future correspondence regarding this application will be directed solely to the address of record until otherwise instructed.

The petition satisfies the requirements of 37 CFR 1.137(b), in that, petitioner has supplied (1) the reply in the form of $1,400 for payment of the issue fee; (2) the petition fee of $1,500; and (3) an adequate statement of unintentional delay. Therefore, the petition is **GRANTED**.

The Office also acknowledges receipt of an Information Disclosure Statement (IDS) with $180 fee and $12 for four (4) advanced order soft copies filed on June 13, 2007.

This application file is being referred to Technology Center Art Unit 2629, for consideration of the IDS filed on June 13, 2007, as being submitted prior to payment of the issue fee.

Telephone inquiries concerning this decision should be directed to the undersigned at (571) 272-3226.

Andrea Smith
Petitions Examiner
Office of Petitions

cc: Joe Muncy
Birch Stewart Kolasch and Birch, LLP
8110 Gatehouse Road Suite 100 E
P.O. Box 747
Falls Church, VA 22040-0747

UNITED STATES PATENT AND TRADEMARK OFFICE

Commissioner for Patents
United States Patent and Trademark Office
P.O. Box 1450
Alexandria, VA 22313-1450
www.uspto.gov

LEON R. YANKWICH
YANKWICH & ASSOCIATES
201 BROADWAY
CAMBRIDGE MA 02139

COPY MAILED

AUG 17 2006

OFFICE OF PETITIONS

In re Patent No. 6,992,182 :
Issued: January 31, 2006 :
Application No. 09/889,093 : ON PETITION
Filed: October 15, 2001 :
Attorney Docket Number: QGN-020.0P US :

This is a decision on the petition filed June 23, 2006, under 37 CFR 3.81(b), to correct the assignee's name on the front of the Patent.[1]

The petition is **GRANTED**.

Petitioner states that the name of a second assignee, Max-Plank-Gesellschaft Zur Forderund Der Wissenschaften was inadvertently omitted from the Fee(s) Transmittal form PTOL-85(b). Accordingly, petitioner requests that a certificate of correction be issued to reflect the name of the second assignee on the front page of the Letters Patent.

37 CFR 3.81(b), effective June 25, 2004, reads:

> *After payment of the issue fee:* Any request for issuance of an application in the name of the assignee submitted after the date of payment of the issue fee, and any request for a patent to be corrected to state the name of the assignee, must state that the assignment was submitted for recordation as set forth in § 3.11 before issuance of the patent, and must include a request for a certificate of correction under § 1.323 of this chapter (accompanied by the fee set forth in § 1.20(a) and the processing fee set forth in § 1.17(i) of this chapter.

The request was accompanied by a certificate of correction (and fee) as required by 3.81(b). Further, the copy of the recorded assignment reflects that Max-Plank-Gesellschaft Zur Forderund Der Wissenschaften, is an assignee of an undivided one

---

[1] *See* Official Gazette of June 22, 2004

half interest in the patent identified above. Accordingly, as the request complies with the provisions of 37 CFR 3.81(b), it would be appropriate for a certificate of correction to issue.

Inquiries concerning this decision should be directed to the undersigned at (571) 272-3212. Any questions concerning the issuance of a certificate of correction should be directed to the Certificates of Correction Branch at (703) 305-8309.

This matter is being referred to the Certificates of Correction Branch for issuance of a certificate of correction.

Patricia Faison-Ball

Patricia Faison-Ball
Senior Petitions Attorney
Office of Petitions

UNITED STATES PATENT AND TRADEMARK OFFICE

Commissioner for Patents
United States Patent and Trademark Office
P.O. Box 1450
Alexandria, VA 22313-1450
www.uspto.gov

KUBOVCIK & KUBOVCIK
SUITE 1105
1215 SOUTH CLARK STREET
ARLINGTON VA 22202

COPY MAILED

FEB 2 7 2009

OFFICE OF PETITIONS

In re Patent No. 6,805,997 :
Issue Date: October 19, 2004 :
Application No. 09/889,168 : DECISION ON PETITION
Filed: July 11, 2001 :
Attorney Docket No. YSM-012 :

This is a decision on the petition under 37 CFR 1.378(c), filed December 15, 2008 to accept the unintentionally delayed payment of a maintenance fee for the above-identified patent.

The petition is **GRANTED**.

This patent expired on October 20, 2008 for failure to pay the three and one-half year maintenance fee. Since this petition was submitted within twenty-four months after the six-month grace period provided in 37 CFR 1.362(e), the petition was timely filed under the provisions of 37 CFR 1.378(c).

The maintenance fee is hereby accepted and the above-identified patent is reinstated as of the mail date of this decision.

Telephone inquiries concerning this decision should be directed to Joan Olszewski at (571) 272-7751.

The patent file is being forwarded to Files Repository.

/Liana Walsh/
Liana Walsh
Petitions Examiner
Office of Petitions

UNITED STATES PATENT AND TRADEMARK OFFICE

COMMISSIONER FOR PATENTS
UNITED STATES PATENT AND TRADEMARK OFFICE
WASHINGTON, D.C. 20231
www.uspto.gov

24 APR 2003

Charles W. Ashbrook
Warner-Lambert Company
2800 Plymouth Road
Ann Arbor, MI 48105

In re Application of	:	
Barth et al	:	
Application No.: 09/889,341	:	DECISION ON
PCT No.: PCT/EP00/01574	:	
Int. Filing Date: 25 February 2000	:	PETITION
Priority Date: 30 March 1999	:	
Attorney's Docket No.: 6386-08-IM	:	UNDER 37 CFR 1.181
For: METHODS FOR ARYLATING ...	:	
OF CESIUM CARBONATE	:	

This decision is in response to the "Petition Under 37 C.F.R. 1.181 to Withdraw Holding of Abandonment" filed on 22 July 2002, requesting the withdrawal of the Notice of Abandonment mailed on 16 August 2001 because the response to the "Notification of Missing Requirements" was timely.

BACKGROUND

On 16 July 2001, applicants filed a transmittal letter for entry into the national stage in the United States which was accompanied by, inter alia, the requisite basic national fee as required by 35 U.S.C. 371(c)(1) and an executed Declaration as required by 35 U.S.C. 371(c)(4). Applicants, however, did not satisfy the requirement set forth by 35 U.S.C. 371(c)(2) because no translation of the International Application was provided with the transmittal letter.

On 16 August 2001, the United States Designated/Elected Office (DO/EO/US) mailed a "NOTIFICATION OF MISSING REQUIREMENTS UNDER 35 U.S.C. 371 IN THE UNITED STATES DESIGNATED/ELECTED OFFICE (DO/EO/US)" (Form PCT/DO/EO/905) which informed applicant, inter alia, that a translation of the application into English and processing fee (37 CFR 1.492(f)) for providing the translation of the application later than the appropriate 30 months from the priority date must be submitted within two (2) months from its 16 August 2001 date of mailing or by 32 months from the priority date, whichever is later, in order to avoid abandonment of the national stage application.

On 30 May 2002, the DO/EO/US mailed a "NOTIFICATION OF ABANDONMENT" which indicated that application is abandoned for failure to timely or properly reply to the Notice to File Missing Parts (Notice) mailed on 16 August 2001. Since no reply was received, the application was abandoned.

On 22 July 2002, applicants filed the instant petition requesting withdrawal of the Notice of Abandonment in response to the "NOTIFICATION OF ABANDONMENT" mailed on 30 May 2002. In support of the request, petitioner has provided a copy of the returned/stamped receipt card acknowledging a receipt date of 07 February 2002, within the time period of response. The petition includes a copy of the signed and dated Response to the Notice of Missing Requirements and the papers accompanying the response is enclosed which included, inter alia, a verified English translation of the non-English language application papers as originally filed.

DISCUSSION

The present petition was accompanied by a copy of the original postcard which was sent to the United States Designated/Elected Office (DO/EO/US). The postcard indicates that a response to the Notice of Missing Requirements under 35 U.S.C. 371 was submitted on 07 February 2002, which would indicate that a verified English translation of the non-English language application was provided on such date.

MPEP 503 provides:

> A postcard receipt which itemizes and properly identifies the papers which are being filed serves as *prima facie* evidence of receipt in the PTO of all the items listed thereon on the date stamped thereon by the PTO.

Applicant's postcard receipt serves as *prima facie* evidence of receipt of a verified English translation of the non-English language application on 07 February 2002 by the USPTO.

In view of the above, the applicant's response is considered timely. Accordingly, the instant application has been improperly abandoned.

CONCLUSION

The petition is under 37 CFR 1.181 is **GRANTED.** Applicants' request to withdraw the "NOTIFICATION OF ABANDONMENT" is **GRANTED**.

The NOTIFICATION OF ABANDONMENT, mailed 30 May 2002 has been **VACATED**.

The application is being returned to the United States Designated/Elected Office (DO/EO/US) for processing in accordance with this decision, that is, for issuance of a Notification of Acceptance of Application (Form PCT/DO/EO/903) identifying a 35 U.S.C.§ 371 date of **07 February 2002**.

Rafael Bacares
PCT Legal Examiner
PCT Legal Affairs
Work (703) 308-2260
Fax (703) 308-6459

Boris Milef
PCT Legal Examiner
PCT Legal Affairs

UNITED STATES PATENT AND TRADEMARK OFFICE

Commissioner for Patents
United States Patent and Trademark Office
P.O. Box 1450
Alexandria, VA 22313-1450
www.uspto.gov

JOHN H. HORNICKEL
BRIDGESTONE FIRESTONE INC.
1200 FIRESTONE PARKWAY
AKRON, OH 44317

COPY MAILED

AUG 06 2008

OFFICE OF PETITIONS

In re Application of :
Xiaorong Wang et al :
Application No. 09/889,366 : DECISION ON PETITION
Filed:July 13, 2001 :
Attorney Docket No. P99048US2A :

This is a decision on the petition under the unintentional provisions of 37 CFR 1.137(b), filed November 18, 2003, to revive the above-identified application.

The petition is **GRANTED**.

This application became abandoned for failure to timely pay the issue fee on or before April 27, 2003, as required by the Notice of Allowance and Fee(s) Due, mailed January 27, 2003 . Accordingly, the date of abandonment of this application is April 28, 2003 .

The petition satisfies the requirements of 37 CFR 1.137(b) in that petitioner has supplied (1) the reply in the form of payment of the issue fee of $1330.00, (2) the petition fee of $1330; and (3) a proper statement of unintentional delay.

It is not apparent whether the person signing the statement of unintentional delay was in a position to have firsthand or direct knowledge of the facts and circumstances of the delay at issue. Nevertheless, such statement is being treated as having been made as the result of a reasonable inquiry into the facts and circumstances of such delay. See 37 CFR 10.18(b) and Changes to Patent Practice and Procedure; Final Rule Notice, 62 Fed. Reg. 53131, 53178 (October 10, 1997), 1203 Off. Gaz. Pat. Office 63, 103 (October 21, 1997). In the event that such an inquiry has not been made, petitioner must make such an inquiry. If such inquiry results in the discovery that it is not correct that the entire delay in filing the required reply from the due date for the reply until the filing of a grantable petition pursuant to 37 CFR 1.137(b) was unintentional, petitioner must notify the Office.

There is no indication that the person signing the petition was ever given a power of attorney to prosecute the application. If the person signing the petition desires to receive future correspondence regarding this application, the appropriate power of attorney documents must be

submitted. While a courtesy copy of this decision is being mailed to the person signing the petition, all future correspondence will be directed to the address currently of record until appropriate instructions are received.

The petition fee under 37 CFR 1.17(m) was charged as $1540.00, instead of the correct fee of $1330.00. An overpayment of $210.00 has been credited to Deposit Account No. 06-0925.

Telephone inquiries concerning this decision should be directed to the undersigned at (571) 272-0602.

This application is being referred to Publishing Division for processing into a patent.

Thurman K. Page
Petitions Examiner
Office of Petitions

cc: Meredith E. Palmer
Bridgestone Americas Holdings, Inc.
1200 Firestone Parkway
Akron, OH 44317

17 OCT 2002

UNITED STATES PATENT AND TRADEMARK OFFICE

COMMISSIONER FOR PATENTS
UNITED STATES PATENT AND TRADEMARK OFFICE
WASHINGTON, D.C. 20231
www.uspto.gov

Herbert B. Keil
Keil & Weinkauf
1101 Connecticut Ave., N.W.
Washington, DC 20036

In re Application of	:	
MARCO THYES	:	
Application No.: 09/889,383	:	DECISION ON PETITION
PCT No.: PCT/EP00/00306	:	
Int. Filing Date: 15 January 2000	:	UNDER 37 CFR 1.181
Priority Date: 22 January 1999	:	
Attorney Docket No.: 0480/01211	:	
For: A PROCESS FOR REDUCING THE	:	
CONTENT OF ETHYL 3-DIMENTY-LAMINO-	:	
2-PHENYLPROPIONATE IN SOLUTIONS OF	:	
ETHYL 2-DIMETHYLAMINO-1-PHENY-3-	:	
CYCLOHEXENE-1-CARBOXYLATE	:	

This is a decision on applicants' "Petition Under 37 CFR 1.181 to Withdraw the Holding of Abandonment" filed in the United States Patent and Trademark Office (USPTO) in the above referenced application on 12 July 2002. No petition fee is required.

BACKGROUND

On 04 September 2001, a Notification of Missing Requirements (Form PCT/DO/EO/905) was mailed to applicants indicating that an oath or declaration in compliance with 37 CFR 1.497(a) and (b) and the surcharge for filing the oath or declaration after the thirty month period were required. A two month period of time was set to respond to the Notification with extensions of time available under 37 CFR 1.136(a).

On 08 July 2002, a Notification of Abandonment (Form PCT/DO/EO/909) was mailed to applicants indicating that applicants had failed to respond to said Notification of Missing Requirements within the time period set forth.

Applicant submitted the instant petition under 37 CFR 1.181 on 12 July 2002, requesting withdrawal of the holding of abandonment. However, applicant did not provide a copy of the declaration, assignment and canceled check in the amount of $280 allegedly deposited on 08 November 2001 and received in the USPTO on 05 February 2002 as itemized on the post card receipt.

DISCUSSION

A review of the USPTO application file reveals that Notification of Missing Requirements (Form PCT/DO/EO/905) was mailed to applicants on 04 September 2001. A review of the finance records for this application indicates that the $130 surcharge, $40 assignment fee and one month extension of time fees were paid on 05 February 2002. However, the executed declaration is not found in the application file.

In his 12 July 2002 submission , applicant alleges that he mailed an executed declaration on 08 November 2001. However, the 08 November 2001 submission is not found in the application file. The 12 July 2002 submission does not include a copy of the allegedly earlier filed declaration but does include "a copy of the date-stamped postcard receipt " for 05 February 2002.

Without the 05 February 2002 submission, the application must be considered abandoned for failure to timely respond to the Notification of Missing Requirements. In requesting withdrawal of the abandonment of the application, applicant must file a renewed petition under 37 CFR 1.181 providing a true copy of the declaration, assignment, the USPTO date-stamped itemized postcard receipt indicating the filing of the declaration on 05 February 2002 as filed.

The evidence submitted is insufficient to establish that the declaration for this application was received in the USPTO on 05 February 2002. Accordingly, it is inappropriate to withdraw the holding of abandonment without a copy of the declaration as a replacement for the missing original declaration with a deposit date of 05 February 2002 at this time.

CONCLUSION

For the reasons stated above, the petition under 37 CFR 1.181 is **DISMISSED WITHOUT PREJUDICE**.

The application remains **ABANDONED**.

Any reconsideration on the merits of this petition should be entitled "Renewed Petition under 37 CFR 1.181".

Any further correspondence with respect to this matter should be addressed to the Assistant Commissioner for Patents, Box PCT, Washington, D.C. 20231, with the contents of the letter marked to the attention of the PCT Legal Office.

Cynthia M. Kratz

Cynthia M. Kratz
Attorney Advisor
PCT Legal Office

CMK/cmk
Telephone: (703) 306-5467

20 FEB 2003

UNITED STATES PATENT AND TRADEMARK OFFICE

COMMISSIONER FOR PATENT
UNITED STATES PATENT AND TRADEMARK OFFIC
WASHINGTON, D.C. 20231
www.uspto.go

Herbert B. Keil
Keil & Weinkauf
1350 Connecticut Ave., N.W.
Washington, DC 20036

In re Application of MARCO THYES Application No.: 09/889,383 PCT No.: PCT/EP00/00306 Int. Filing Date: 15 January 2000 Priority Date: 22 January 1999 Attorney Docket No.: 0480/01211 For: METHOD FOR REDUCING 3-DIMETHYLAMINO-2-PHENYLPROPION-ACID ETHYL ESTER-CONTENT IN SOLUTIONS OF 2-DIMETHYLAMINO-1-PHENY-3-CYCLOHEXENE-1-CARBOXYLIC ACID ETHYL ESTER	DECISION ON RENEWED PETITION UNDER 37 CFR 1.181

This is a decision on applicants' "Renewed Petition Under 37 CFR 1.181" to withdraw the holding of abandonment filed in the United States Patent and Trademark Office (USPTO) in the above referenced application on 01 November 2002. No petition fee is required.

BACKGROUND

On 04 September 2001, a Notification of Missing Requirements (Form PCT/DO/EO/905) was mailed to applicants indicating that an oath or declaration in compliance with 37 CFR 1.497(a) and (b) and the surcharge for filing the oath or declaration after the thirty month period were required. A two month period of time was set to respond to the Notification with extensions of time available under 37 CFR 1.136(a).

On 08 July 2002, a Notification of Abandonment (Form PCT/DO/EO/909) was mailed to applicants indicating that applicants had failed to respond to said Notification of Missing Requirements within the time period set forth in the notice.

Applicant submitted a petition under 37 CFR 1.181 on 12 July 2002, requesting withdrawal of the holding of abandonment. On 17 October 2002, a decision was mailed to applicant indicating that the evidence submitted was insufficient to establish that the declaration for this application was received in the USPTO on 05 February 2002 and the petition was

dismissed without prejudice.

On 01 November 2002, applicant filed a renewed petition under 37 CFR 1.181 along with a copy of an itemized receipt with USPTO date-stamp "OIPE FEB 05 2002", the declaration and assignment.

DISCUSSION

To prove the timely filing of the declaration in response to the Notification of Missing Requirements, counsel provided an itemized receipt, bearing an official USPTO date-stamp "OIPE FEB 05 2002". The itemized receipt indicates the submission of a declaration, assignment and one month extension of time fee including a check for $280 for 09/889,383 and identifies the applicant as Thyes et al. The date stamp on the itemized receipt conforms with a USPTO date-stamp.

The evidence submitted is sufficient to establish that the declaration for this application was received in the USPTO on 05 February 2002. Accordingly, it is appropriate to accept the copy of the declaration submitted on 01 November 2002 as a replacement for the missing original declaration and assignment with a deposit date of 05 February 2002.

CONCLUSION

For the reasons stated above, the petition under 37 CFR 1.181 is **GRANTED**.

The application will be forwarded to the United States Designated/Elected Office for further processing. The 35 U.S.C. 371(c) and 102(e) date is **05 February 2002.**

Cynthia M. Kratz

Cynthia M. Kratz
Attorney Advisor
PCT Legal Office

Telephone: (703) 306-5467

30 JAN 2003

UNITED STATES PATENT AND TRADEMARK OFFICE

COMMISSIONER FOR PATENTS
UNITED STATES PATENT AND TRADEMARK OFFICE
WASHINGTON, D.C. 20231
www.uspto.gov

Steinberg & Raskin, P.C.
1140 Avenue of the Americas, 15th Floor
New York, NY 10036-5803

In re Application of HEINONEN et al	:	
U.S. Application No.: 09/889,438	:	
Int. Application No.: PCT/FI00/00019	:	DECISION
Int. Filing Date: 12 January 2000	:	
Priority Date: 12 January 1999	:	
Attorney Docket No.: 989.1033	:	
For: METHOD FOR CHANGING LINEAR	:	
LOAD ON A REEL-UP	:	

This is in response to applicant's "Petition for Revival of an Application for Patent Abandoned Unavoidably Under 37 CFR 1.137(a)", filed 02 December 2002, which is being treated as a petition under 37 CFR 1.181 to withdraw a holding of abandonment based on failure to receive an office action.

BACKGROUND

On 12 January 2000, applicant filed international application PCT/FI00/00019, which claimed priority of an earlier Finland application filed 12 January 1999. A copy of the international application was communicated to the USPTO from the International Bureau on 20 July 2000. A Demand for international preliminary examination, in which the United States was elected, was filed on 14 July 2000, prior to the expiration of nineteen months from the priority date. Accordingly, the thirty-month period for paying the basic national fee in the United States expired at midnight on 12 July 2001.

On 12 July 2001, applicant filed national stage papers in the United States Designated/Elected Office (DO/EO/US). The submission was accompanied by, *inter alia*, the basic national fee required by 35 U.S.C. 371(c)(1).

On 22 August 2001, the DO/EO/US mailed a Notification of Missing Requirements Under 35 U.S.C. 371 (Form PCT/DO/EO/905), which indicated that an oath or declaration in compliance with 37 CFR 1.497 must be filed.

International application PCT/FI00/00019 became abandoned for failure to timely respond to the Notification of Missing Requirements.

On 02 December 2002, applicant filed the present petition along with an executed declaration.

DISCUSSION

According to the Official Gazette at 1156 OG 53 and MPEP 711.03(c), a petition to withdraw a holding of abandonment based on failure to receive an Office communication must include: (1) a statement by the practitioner that the Office communication was not received by the practitioner, (2) a statement by the practitioner that he searched the application file jacket and docket records and that the search indicates that the Office communication was not received, and (3) a copy of the docket record where the non-received Office communication would have been entered had it been received and docketed.

With regard to item (1) above, applicant's representative has provided the required statement.

With regard to item (2) above, applicant's representative has not provided the required statement.

With regard to item (3) above, applicant's representative should supply a docket record which lists responses due to the USPTO on 22 October 2001 for all cases handled by the representative's firm, or if such a docket record is unavailable, for all cases handled by applicant's representative. This docket record must illustrate the absence of any listing of a response due to a Notification of Missing Requirements.

CONCLUSION

For the reasons above, the petition is DISMISSED without prejudice.

If reconsideration on the merits of the petition is desired, a proper response must be filed within TWO (2) MONTHS from the mail date of this decision. Extensions of time are available under 37 CFR 1.136(a). Any reconsideration request should include a cover letter entitled "Renewed Petition Under 37 CFR 1.181".

Please direct further correspondence with respect to this matter to the Commissioner for Patents, Box PCT, Washington, D.C. 20231, and address the contents of the letter to the attention of the PCT Legal Office.

Bryan Tung
PCT Legal Examiner
PCT Legal Office

Telephone: 703-308-6614
Facsimile: 703-308-6459

25 MAR 2003

UNITED STATES PATENT AND TRADEMARK OFFICE

COMMISSIONER FOR PATENTS
UNITED STATES PATENT AND TRADEMARK OFFICE
WASHINGTON, D.C. 20231
www.uspto.gov

Steinberg & Raskin, P.C.
1140 Avenue of the Americas, 15th Floor
New York, NY 10036-5803

In re Application of HEINONEN et al	:	
U.S. Application No.: 09/889,438	:	
Int. Application No.: PCT/FI00/00019	:	DECISION
Int. Filing Date: 12 January 2000	:	
Priority Date: 12 January 1999	:	
Attorney Docket No.: 989.1033	:	
For: METHOD FOR CHANGING LINEAR	:	
LOAD ON A REEL-UP	:	

This is in response to applicant's "Renewed Petition Under 37 C.F.R. 1.81" filed 18 March 2003.

BACKGROUND

On 12 January 2000, applicant filed international application PCT/FI00/00019, which claimed priority of an earlier Finland application filed 12 January 1999. A copy of the international application was communicated to the USPTO from the International Bureau on 20 July 2000. A Demand for international preliminary examination, in which the United States was elected, was filed on 14 July 2000, prior to the expiration of nineteen months from the priority date. Accordingly, the thirty-month period for paying the basic national fee in the United States expired at midnight on 12 July 2001.

On 12 July 2001, applicant filed national stage papers in the United States Designated/Elected Office (DO/EO/US). The submission was accompanied by, *inter alia*, the basic national fee required by 35 U.S.C. 371(c)(1).

On 22 August 2001, the DO/EO/US mailed a Notification of Missing Requirements Under 35 U.S.C. 371 (Form PCT/DO/EO/905), which indicated that an oath or declaration in compliance with 37 CFR 1.497 must be filed.

On 31 May 2002, the DO/EO/US mailed a Notice of Abandonment, which indicated that the application is abandoned for failure to timely respond to the Notification of Missing Requirements.

On 02 December 2002, applicant filed a petition under 37 CFR 1.181 along with an executed declaration.

On 30 January 2003, this Office mailed a decision dismissing the 02 December 2002 petition.

On 18 March 2003, applicant filed the present renewed petition under 37 CFR 1.181.

DISCUSSION

According to the Official Gazette at 1156 OG 53 and MPEP 711.03(c), a petition to withdraw a holding of abandonment based on failure to receive an Office communication must include: (1) a statement by the practitioner that the Office communication was not received by the practitioner, (2) a statement by the practitioner that he searched the application file jacket and docket records and that the search indicates that the Office communication was not received, and (3) a copy of the docket record where the non-received Office communication would have been entered had it been received and docketed.

With regard to item (1) above, applicant's representative has provided the required statement.

With regard to item (2) above, applicant's representative has provided the required statement.

With regard to item (3) above, applicant's representative has submitted a docket record which lists responses due to the USPTO on 22 October 2001. This docket record illustrates the absence of any listing of a response due to a Notification of Missing Requirements.

CONCLUSION

For the reasons above, the petition under 37 CFR 1.181 is GRANTED.

The Notice of Abandonment mailed 31 May 2002 is hereby VACATED.

The application has an International Filing Date of 12 January 2000 and a date under 35 U.S.C. 371(c) of 02 December 2002.

The application is being forwarded to the DO/EO/US for processing in accordance with this decision.

Bryan Tung
PCT Legal Examiner
PCT Legal Office

Telephone: 703-308-6614
Facsimile: 703-308-6459

UNITED STATES PATENT AND TRADEMARK OFFICE

Commissioner for Patents
United States Patent and Trademark Office
P.O. Box 1450
Alexandria, VA 22313-1450
www.uspto.gov

DANIEL D. RYAN
RYAN KROMHOLZ & MANION
P.O. BOX 26618
MILWAUKEE, WI 53226

COPY MAILED

OCT 28 2004

OFFICE OF PETITIONS

In re Application of	:
Walid N. Aboul-Hosn et al	: DECISION ON PETITIONS
Application No. 09/889,442	: UNDER 37 CFR 1.78(a)(3) AND
Filed: December 9, 2002	: UNDER 37 CFR 1.78(a)(6)
Attorney Docket No. 9261-16828-PCTUS	:

This is a decision on the petition filed August 9, 2004, which is being treated under 37 CFR §§ 1.78(a)(3) and 1.78(a)(6), to accept an unintentionally delayed claim under 35 U.S.C. §§ 120 and 119(e) for the benefit of the prior-filed provisional and nonprovisional applications set forth in the concurrently filed amendment.

The petition is **DISMISSED**.

A petition for acceptance of a claim for late priority under 37 CFR §§ 1.78(a)(3) and 1.78(a)(6) is only applicable to those applications filed on or after November 29, 2000. Further, the petition is appropriate only after the expiration of the period specified in 37 CFR §§ 1.78(a)(2)(ii) and 1.78(a)(5)(ii). In addition, the petition under 37 CFR §§ 1.78(a)(3) and 1.78(a)(6) must be accompanied by:

(1) the reference required by 35 U.S.C. §§ 120 and 119(e) and 37 CFR §§ 1.78(a)(2)(I) and 1.78(a)(5)(I) of the prior-filed application, unless previously submitted;

(2) the surcharge set forth in § 1.17(t); and

(3) a statement that the entire delay between the date the claim was due under 37 CFR §§ 1.78(a)(2)(ii) and 1.78(a)(5)(ii) and the date the claim was filed was unintentional. The Commissioner may require additional where there is a question whether the delay was unintentional.

The petition fails to comply with item (1) above.

The amendment states that the instant application claims priority to provisional Application No. 60/115,786, filed January 13, 1999. However, as the instant application was filed on December 9, 2002, it is improper for this application to claim direct priority to the provisional application since it was not filed within twelve (12) months of the filing date thereof.

It is noted that intermediate Application No. 09/462,656 was filed within twelve (12) months of the above-noted provisional application. However, in reviewing Office database computer records, there is no indication that Application No. 09/462,656 claims priority to the provisional application. Petitioner is advised that, where an application claims a benefit under 35 U.S.C. 120 of a chain of applications, the application must make a reference to the first (earliest) application and every intermediate application. See Sampson v. Ampex Corp., 463 F.2d 1042, 1044-45, 174 USPQ 417, 418-19 (2d Cir. 1972); Sticker Indus. Supply Corp. V. Blaw-Knox Co., 405 F.2d 90, 93, 160 USPQ 177, 179 (7th Cir. 1968); Hovlid v. Asari, 305 F.2d 747, 751, 134 USPQ 162, 165 (9th Cir. 1962). See also MPEP § 201.11. In addition, every intermediate application must also make a reference to the first (earliest) application and every application after the first application and before such intermediate application. MPEP Section 201.06(d).

Accordingly, before the petition under 37 CFR §§ 1.78(a)(3) and 1.78(a)(6) can be granted, a renewed petition under 37 CFR §§ 1.78(a)(3) and 1.78(a)(6) correcting the above matters is required.

Further correspondence with respect to this matter should be addressed as follows:

By mail: Mail Stop Petition
Commissioner for Patents
Post Office Box 1450
Alexandria, Va 22313-1450

By FAX: (703) 872-9306
Attn: Office of Petitions

By hand: 2011 South Clark Place
Crystal Plaza Two Lobby
Room 1B03
Arlington, VA 22202

Any questions concerning this matter may be directed to the undersigned at (571) 272-3208.

Karen Creasy

Karen Creasy
Petitions Examiner
Office of Petitions
Office of the Deputy Commissioner
for Patent Examination Policy

UNITED STATES PATENT AND TRADEMARK OFFICE

Commissioner for Patents
United States Patent and Trademark Office
P.O. Box 1450
Alexandria, VA 22313-1450
www.uspto.gov

DANIEL D. RYAN
RYAN KROMHOLZ & MANION
P.O. BOX 26618
MILWAUKEE, WI 53226

COPY MAILED

JAN 13 2005

OFFICE OF PETITIONS

In re Application of
Walid N. Aboul-Hosn et al
Application No. 09/889,442
Filed: December 9, 2002
Attorney Docket No. 9261-16828-PCTUS

DECISION ON PETITION
UNDER 37 CFR 1.78(a)(3)

This is a decision on the renewed petition filed November 12, 2004, under 37 CFR 1.78(a)(3), to accept an unintentionally delayed claim under 35 U.S.C. §§ 120 and 365(c) for the benefit of the prior-filed applications set forth in the amendment filed concurrently with the instant petition.

The petition is **DISMISSED** as moot for the reasons stated below.

37 CFR 1.78(a)(2)(ii)[1] indicates that the time periods set forth therein do not apply if the later-filed application is: (1) an application for a design patent; (2) an application filed under 35 U.S.C. § 111(a) before November 29, 2000; or (3) a nonprovisional application which entered the national stage after compliance with 35 U.S.C. § 371 from an international application filed under 35 U.S.C. § 365 before November 29, 2000.

Since the instant nonprovisional application is the national stage entry of an international application filed prior to November 29, 2000, the provisions of 37 CFR 1.78(a)(3) for acceptance of a later claim for priority do not apply to the subject nonprovisional application. Accordingly, the petition is dismissed as involving a moot issue.

In view of the above, the $1,330 fee submitted for the petition under 37 CFR 1.78(a)(3) is unnecessary. Accordingly, petitioner may request a refund of the $1,330 petition fee submitted by writing to the Office of Finance, Refund Section. A copy of this decision should accompany petitioner's request.

Any inquiries concerning this decision may be directed to Karen Creasy at (571) 272-3208.

---

[1]37 CFR 1.78(a)(2) was amended to place its provisions in separate paragraphs (a)(2)(i) through (a)(iv) for clarity. See **Requirements for Claiming the Benefit of Prior-Filed Applications Under Eighteen-Month Publication of Patent Applications**, 66 FR 67087 (December 28, 2001); 1254 Off. Gaz. Pat. Office, 121 (January 22, 2002) (final rule).

The application is being referred to Technology Center Art Unit 3762.

Karen Creasy

Karen Creasy
Petitions Examiner
Office of Petitions
Office of the Deputy Commissioner
for Patent Examination Policy

FEB 2 8 2002

UNITED STATES PATENT AND TRADEMARK OFFICE

#4

COMMISSIONER FOR PATENTS
UNITED STATES PATENT AND TRADEMARK OFFICE
WASHINGTON, D.C. 20231
www.uspto.gov

William S. Frommer
Frommer Lawrence & Haug LLP
745 Fifth Avenue
New York, NY 10151

In re Application of NAKAMURA, Masahi et al. Application No.: 09/889,459 PCT No.: PCT/JP00/08113 Int. Filing Date: 17 November 2000 Priority Date: 17 November 1999 Attorney Docket No.: 450106-02850 For: DIGITAL SIGNAL PROCESSING APPARATUS, SYSTEM THEREOF, AND EXTENSION FUNCTION PROVIDING METHOD	DECISION ON PETITION UNDER 37 CFR 1.181

This decision is in response to "Petition to Withdraw Notification of Missing Requirements," filed on 22 October 2001, in effect asking that the Office vacate the Notification of Missing Requirements. No petition fee is due.

BACKGROUND

On 17 November 2000, applicants filed international application PCT/JP00/08113. A copy of the international application was communicated to the United States Patent and Trademark Office (USPTO) from the International Bureau on 25 May 2001. The deadline for entry into the national stage in the United States was twenty months from the priority date, or 17 July 2001.

On 16 July 2001, applicants filed a submission for entry into the national stage in the United States which was accompanied by, *inter alia*, the U.S. Basic National Fee and an English translation.

On 28 August 2001, the USPTO mailed a NOTICE OF DEFECTIVE TRANSLATION (Form PCT/DO/EO/913) noting that the number of claims in the translation did not match the number of claims in the international application and a NOTIFICATION OF MISSING REQUIREMENTS UNDER 35 U.S.C. 371 (Form PCT/DO/EO/905) indicating, *inter alia*, that the translation filed with the application was defective and that the processing fee for late filing of the translation was due.

On 22 October 2001, applicants filed "Petition to Withdraw Notification of Missing Requirements," accompanied by, *inter alia*, a copy of the postcard receipt from the 16 July 2001 filing and a copy of the English translation from which page 32 was omitted.

On 15 January 2002, applicants filed, *inter alia*, an additional copy of the English translation with 32 pages of specification and 12 claims.

DISCUSSION

MPEP at section 503 states, in part:

> A postcard receipt which itemizes and properly identifies the papers which are being filed serves as *prima facie* evidence of receipt in the PTO of all the items listed thereon on the date stamped thereon by the PTO.

The postcard receipt lists, *inter alia*, "Application for Patent, including 32 pages Specification 12 Claims." The postcard receipt is date stamped and marked with the application serial number. The postcard receipt is not annotated to indicate that any of the items were not received.

The postcard receipt is adequate evidence that a patent application with 32 pages of specification and 12 Claims was received. The translation filed on 15 January 2002 includes 32 pages of specification and 12 claims. It meets the postcard description and is accepted as a true copy of what was filed on 16 July 2001.

CONCLUSION

For the reasons set forth above, the petition under 37 CFR 1.181 is **GRANTED**.

The NOTIFICATION OF MISSING REQUIREMENTS (Form PCT/DO/EO/905) and NOTICE OF DEFECTIVE TRANSLATION (Form PCT/DO/EO/913) mailed 27 August 2001 are **VACATED**.

This application is being forwarded to the National Stage Processing Branch of the Office of PCT Operations for further processing in accordance with this decision, including the mailing of a Notification Of Acceptance (Form PCT/DO/EO/903) and filing receipt. The 35 U.S.C. §371(c) date is 16 July 2001.

Boris Milef
PCT Legal Examiner
PCT Legal Administration

Erin M. Pender
Attorney Advisor
PCT Legal Administration

Telephone: 703-305-0455
Facsimile: 703-308-6459

UNITED STATES PATENT AND TRADEMARK OFFICE

Commissioner for Patents
United States Patent and Trademark Office
P.O. Box 1450
Alexandria, VA 22313-1450
www.uspto.gov

SNELL & WILMER LLP
1920 MAIN STREET
SUITE 1200
IRVINE, CA 92614-7230

COPY MAILED

DEC 29 2004

OFFICE OF PETITIONS

In re Application of	:	
Ryuichi Murai et al	:	
Application No. 09/889,473	:	ON PETITION
Filed: July 17, 2001	:	
Attorney Docket No. NAKI-BP44	:	

This is a decision on the petition under 37 CFR 1.137(b), filed November 2, 2004, to revive the above-identified application.

The petition is **GRANTED.**

The above-identified application became abandoned for failure to reply within the meaning of 37 CFR 1.113 in a timely manner to the final Office action mailed May 3, 2004, which set a shortened statutory period for reply of three (3) months. A reply under 37 CFR 1.113 is limited to an amendment that *prima facie* places the application in condition for allowance or a Notice of Appeal (and appeal fee required by 37 CFR 1.17(b)). The reply submitted on September 27, 2004 did not *prima facie* place the application in condition for allowance as noted in the Advisory Action mailed October 19, 2004. Therefore, as no Notice of Appeal (and appeal fee), Request for Continued Examination (RCE) or a continuing application was timely filed. Extension of time under the provisions of 37 CFR 1.136(a) were obtained. Accordingly, the above-identified application became abandoned on October 4, 2004.

Telephone inquiries concerning this decision should be directed to Wan Laymon at (571) 272-3220.

This matter is being referred to Technology Center 2879 for processing of the request for continued examination under 37 CFR 1.114.

Wan Laymon
Petitions Examiner
Office of Petitions
Office of the Deputy Commissioner
for Patent Examination Policy

UNITED STATES PATENT AND TRADEMARK OFFICE

COMMISSIONER FOR PATENTS
UNITED STATES PATENT AND TRADEMARK OFFICE
P.O. BOX 1450
ALEXANDRIA, VA 22313-1450
www.uspto.gov

Paper No. 19

Lackenbach Siegel
Marzullo Aronson & Greenspan
At Penthouse Suite
One Chase Road
Scarsdale, NY 10583

COPY MAILED

OCT 19 2004

OFFICE OF PETITIONS

In re Application of
Christina Maria Mateo de Acosta Del Rio, et al.
Application No. 09/889,480
Filed: September 20, 2001
Attorney Docket No. P-23

ON PETITION

This is a decision on the petition under 37 CFR 1.137(b), filed June 28, 2004, to revive the above-identified application.

The petition is **DISMISSED**.

Any request for reconsideration of this decision must be submitted within TWO (2) MONTHS from the mail date of this decision. Extensions of time under 37 CFR 1.136(a) are permitted. The reconsideration request should include a cover letter entitled "Renewed Petition under 37 CFR 1.137(b)." This is **not** a final agency action within the meaning of 5 U.S.C. § 704.

A grantable petition under 37 CFR 1.137(b) must be accompanied by: (1) the required reply, unless previously filed; (2) the petition fee as set forth in 37 CFR 1.17(m); (3) a statement that the entire delay in filing the required reply from the due date for the reply until the filing of a grantable petition pursuant to 37 CFR 1.137(b) was unintentional; and (4) any terminal disclaimer (and fee as set forth in 37 CFR 1.20(d)) required by 37 CFR 1.137(c). Where there is a question as to whether either the abandonment or the delay in filing a petition under 37 CFR 1.137 was unintentional, the Commissioner may require additional information. See MPEP 711.03(c)(III)(C) and (D). The instant petition lacks item (1).

The application became abandoned for failure to timely file a reply within the meaning of 37 CFR 1.113 to the final Office action of October 28, 2003. The proposed reply required for consideration of a petition to revive must be a Notice of Appeal (and appeal fee required by 37 CFR 1.17(b)), an amendment that *prima facie* places the application in condition for allowance, a request for continued examination (RCE) under 37 CFR 1.114, or the filing of a continuing application. See MPEP 711.03(c)(III)(A)(2). Since the amendment submitted does not *prima facie* place the application in condition for allowance, the reply required must be a Notice of Appeal (and appeal fee), a request for continued examination under 37 CFR 1.114, or the filing of a continuing application. A copy of the Examiner's Advisory Action is attached herewith.

Further correspondence with respect to this matter should be addressed as follows:

By Mail: Mail Stop PETITION
Commissioner for Patents
Post Office Box 1450
Alexandria, VA 22313-1450

Effective December 1, 2003, the Office of Petitions can no longer receive hand-carried correspondence, or facsimile transmissions of correspondence. The centralized location for hand-carried correspondence is the Customer Window located at:

U. S. Patent and Trademark Office
220 20th Street
Customer Window, Mail Stop Petitions
Crystal Plaza Two Lobby, Room 1B03
Arlington, VA 22202

The centralized facsimile number is **(703) 872-9306.**

Telephone inquiries concerning this decision should be directed to the undersigned at (571) 272-3223.

Marianne E. Jenkins
Marianne E. Jenkins
Petitions Examiner
Office of Petitions
Office of the Deputy Commissioner
for Patent Examination Policy

Attachment: Examiner's Advisory Action

UNITED STATES PATENT AND TRADEMARK OFFICE

COMMISSIONER FOR PATENTS
UNITED STATES PATENT AND TRADEMARK OFFICE
P.O. BOX 1450
ALEXANDRIA, VA 22313-1450
www.uspto.gov

Paper No. 22

Lackenbach Siegel
Marzullo Aronson & Greenspan
At Penthouse Suite
One Chase Road
Scarsdale, NY 10583

COPY MAILED
NOV 12 2004
OFFICE OF PETITIONS

In re Application of	:	
Cristina Maria Mateo de Acosta Del Rio, et al.	:	
Application No. 09/889,480	:	ON PETITION
Filed: September 20, 2001	:	
Attorney Docket No. P-23	:	

This is a decision on the renewed petition under 37 CFR 1.137(b), filed October 28, 2004, to revive the above-identified application.

The petition is **GRANTED**.

Telephone inquiries concerning this decision should be directed to the undersigned at (571) 272-3223.

The application file is being forwarded to Technology Center 1600.

Marianne E. Jenkins
Petitions Examiner
Office of Petitions
Office of the Deputy Commissioner
for Patent Examination Policy

FEB 2 6 2002

UNITED STATES PATENT AND TRADEMARK OFFICE

COMMISSIONER FOR PATENTS
UNITED STATES PATENT AND TRADEMARK OFFICE
WASHINGTON, D.C. 20231
www.uspto.gov

BIRCH, STEWART, KOLASCH & BIRCH, LLP
P.O. BOX 747
FALLS CHURCH, VA 22040-0747

In re Application of Maarit SALMI, et al. Application No.: 09/889,496 PCT No.: PCT/F100/00039 Int. Filing Date: 18 January 2000 Priority Date: 18 January 1999 Attorney's Docket No.: 0365-0510P For: PAINT COMPOSITIONS:	DECISION ON PETITION UNDER 37 CFR 1.182

#6

This is a decision on the "Petition Under 37 CFR 1.182 for change in name of an Inventor" filed 02 January 2002 requesting an inventor's change of name from Maarit SALMI to Maarit LAHTINEN. The petition included authorization to charge any petition fees to Deposit Account No. 02-2448.

BACKGROUND

On 18 January 2000, applicants filed international application PCT/F100/00039, which claims a priority date of 18 January 1999. A copy of the international application was communicated to the United States Patent and Trademark Office from the International Bureau on 03 August 2000. A Demand for international preliminary examination, in which the United States was elected, was timely filed on 10 August 2000. Accordingly, the thirty month period to comply with the requirements for entry into the national stage of the United States expired at midnight on 18 July 2001.

On 18 July 2001, applicants filed a Transmittal Letter (Form PTO-1390) for entry into the national stage in the United States, which was accompanied by, *inter alia*, the requisite basic national fee, an English translation of the International Application as filed, and the surcharge for furnishing the oath or declaration later than the 30 months from the priority date..

On 13 August 2001, applicants filed an executed Declaration and Power of Attorney .

On 22 August 2001, the United States Designated/Elected Office (PTO) mailed applicants a "Notification of Missing Requirements Under 35 U.S.C. 371 in the United States Designated/Elected Office (DO/EO/US)" (Form PCT/DO/EO/905) indicating that an oath or declaration in compliance with 37 CFR 1.497(a)-(b) was required. Applicant's were given a TWO (2) MONTH period from the mail date of the Notification to properly respond, with extensions of time obtainable under 37 C.F.R. 1.136 (a).

On 04 September 2001, applicants filed a letter stating that the filing requirements were perfected prior to the receipt of the Notification of Missing Requirements mailed 22 August 2001.

On 14 September 2001, the PTO mailed applicants a "Notification of a Defective Response" (Form PCT/DO/EO/916), acknowledging receipt of the declaration filed 13 August 2001, but also informing applicant that the requirements set forth in the Notice mailed 22 August 2001 had not been met. Specifically, applicants were informed in an accompanying Notification of a Defective Oath Or Declaration" (Form PCT/DO/EO/917) that the declaration does not comply with 37 C.F.R. 1.497(a), (b) and (f) in that it is not executed in accordance with either 37 C.F.R. 1.66 or 1.68 and does not identify inventor Maarit SALMI. It was noted that if there was a change in inventor's name, the relevant petition should be filed. Applicants were advised that failure to submit an oath or declaration in compliance with 37 C.F.R. 1.497 within the time period set would result in failure to enter the national stage and the abandonment of the application. The period for response was set at ONE MONTH from the date of this Notification or within the time remaining in the response set forth in the Notification of Missing Requirements, whichever is longer. However, only extensions of time for response from the period for response set in the Notification mailed August 2001 were permitted.

On 02 January 2002, applicants filed the instant petition under 1.182 to change the name of inventor Maarit SALMI to Maarit LAHTINEN.

DISCUSSION

Initially, it is noted that applicants filed an executed Declaration and Power of Attorney on 13 August 2001 *prior to* the mailing by the PTO on 22 August 2001 of, the "Notification of Missing Requirements Under 35 U.S.C. 371 in the United States Designated/Elected Office (DO/EO/US)" (Form PCT/DO/EO/905). Accordingly, the "Notification of Missing Requirements Under 35 U.S.C. 371 in the United States Designated/Elected Office (DO/EO/US)"(Form PCT/DO/EO/905) is properly vacated, and no extension of time is necessary to respond to the PTO Notifications provided in Forms 905, 916 or 917 referred to above.

Regarding the petition under 1.182, MPEP section 605.04(c) states, in part, the following:

> In cases where an inventor's name has been changed after the application has been filed and the inventor desires to change his or her name on the application, he or she must submit a petition under 37 CFR 1.182. . . . The petition must include an appropriate petition fee and an affidavit signed with both names setting forth the procedure whereby the change of name was effected, or a certified copy of the court order.

The $130 petition fee required under 1.17(h) has been charged to Deposit Account No. 02-2448, as authorized.

In support of the petition, applicants submitted an affidavit of inventor LAHTINEN stating that her name had changed from SALMI to LAHTINEN upon her marriage, signed using the name LAHTINEN only; a statement signed by an attorney that under Finnish Law a person cannot sign an official document with a false name; and a copy of her marriage certificate dated 31 July 1999, as extracted from the Population Information System in Finland. This showing is sufficient.

CONCLUSION

The petition under 37 CFR 1.182 requesting to change the name of inventor Maarit SALMI to Maarit LAHTINEN in the present application is **GRANTED** .

The "Notification of Missing Requirements Under 35 U.S.C. 371" (Form PCT/DO/EO/905) and the "Notification of a Defective Oath or Declaration" (Form PCT/DO/EO/917) are hereby **VACATED**.

The fee of $130.00 for this petition under 37 CFR 1.182 will be charged to Deposit Account No. 02-2448, as authorized.

This application is being forwarded to the United States Designated/Elected Office (DO/EO/US) for further processing in accordance with this decision, including the mailing of a "Notification of Acceptance" (Form PCT/DO/EO/903) indicating a date under 35 USC 371 of 13 August 2001.

Bennett Celsa
PCT Legal Detailee
PCT Legal Office
Telephone: (703) 305-7556
Facsimile: (703) 308-6459

Boris Milef
PCT Legal Examiner
PCT Legal Office

UNITED STATES PATENT AND TRADEMARK OFFICE

Commissioner for Patents
United States Patent and Trademark Office
P.O. Box 1450
Alexandria, VA 22313-1450
www.uspto.gov

DUANE MORRIS, LLP
IP DEPARTMENT
30 SOUTH 17TH STREET
PHILADELPHIA, PA 19103-4196

COPY MAILED

NOV 02 2006

OFFICE OF PETITIONS

ON PETITION

In re Application of :
Siegbert Vial :
Application No. 09/889,535 :
Filed: January 16, 2002 :
Attorney Docket No. 3241-72

This is a decision on the petition filed, October 31, 2006 under 37 CFR 1.313(c)(2) to withdraw the above-identified application from issue after payment of the issue fee.

The petition is **GRANTED**.

The above-identified application is withdrawn from issue for consideration of a submission under 37 CFR 1.114 (request for continued examination). See 37 CFR 1.313(c)(2).

Petitioner is advised that the issue fee paid on September 29, 2006 in the above-identified application cannot be refunded. If, however, the above-identified application is again allowed, petitioner may request that it be applied towards the issue fee required by the new Notice of Allowance.[1]

Telephone inquiries should be directed to Irvin Dingle at (571) 272-3210.

This matter is being referred to Technology Center AU 3751 for processing of the request for continued examination under 37 CFR 1.114 and for consideration of the concurrently filed Amendment.

Irvin Dingle
Petitions Examiner
Office of Petitions

---

[1] The request to apply the issue fee to the new Notice may be satisfied by completing and returning the new Issue Fee Transmittal Form PTOL-85(b), which includes the following language thereon: Commissioner for Patents is requested to apply the Issue Fee and Publication Fee (if any) or re-apply any previously paid issue fee to the application identified above. Petitioner is advised that, whether a fee is indicated as being due or not, the Issue Fee Transmittal Form must be completed and timely submitted to avoid abandonment. Note the language in bold text on the first page of the Notice of Allowance and Fee(s) Due (PTOL-85).

UNITED STATES PATENT AND TRADEMARK OFFICE

Commissioner for Patents
United States Patent and Trademark Office
P.O. Box 1450
Alexandria, VA 22313-1450
www.uspto.gov

MAIL

MAY 16 2007

DIRECTOR'S OFFICE
TECHNOLOGY CENTER 2600

OBLON, SPIVAK, MCCLELLAND, MAIER & NEUSTADT, P.C.
1940 DUKE STREET
ALEXANDRIA VA 22314

In re Application of
Sunao MURATA
Application No. 09/889,567
Filed: September 20, 2001
For: **MEDIUM WHERE STATUS INFORMATION PRINTING PROGRAM IS RECORDED, PRINTER, PRINT CONTROLLER, STATUS INFORMATION PRINTING METHOD, AND STATUS INFORMATION PRINTING SYSTEM**

ACCEPTANCE
OF PAPERS

This is a decision responsive to the petition filed April 03, 2007 requesting consideration of the references filed in an Information Disclosure Statement originally filed on November 27, 2001. This decision is also responsive to the copies of the Search Report and the foreign patent documents (English Abstracts) filed in a supplemental submission on May 7, 2007.

Petitioner asserts that an Information Disclosure Statement, including a copy of a Search Report and English Abstracts for two Japanese foreign patent documents, was received by the US PTO on November 27, 2001. Applicant has also provided a copy of a date-stamped postcard evidencing receipt of these items by the US PTO on November 27, 2001.

A review of the file does not find the original submission. Therefore, it is presumed that the original submission was received by the Office, but lost. The Office sincerely apologizes for any inconvenience to applicant.

The April 3, 2007 submission, taken together with the May 7, 2007 supplemental submission is **ACCEPTED.** Accordingly, the resubmission of the originally filed Information Disclosure Statement will be considered.

The application file is being forwarded to the Examiner for appropriate consideration in due course.

Krista Zele
Quality Assurance Specialist
Technology Center 2600
Communications

FEB 2 5 2002

UNITED STATES PATENT AND TRADEMARK OFFICE

COMMISSIONER FOR PATENTS
UNITED STATES PATENT AND TRADEMARK OFFICE
WASHINGTON, D.C. 20231
www.uspto.gov

Stephen G. Adrian
Armstrong Westerman
1725 K Street, N.W., Suite 1000
Washington, D.C. 20006

In re Application of	:	
TAKEDA, et al.	:	
U.S. Application No.: 09/889,570	:	
PCT No.: PCT/JP00/00536	:	DECISION ON PETITION
Int. Filing Date: 01 February 2000	:	
Priority Date: 01 February 1999	:	UNDER 37 CFR 1.182
Attorney Docket No.: 010973	:	
For: WATER-BORNE URETHANE RESIN COMPOSITION FOR FORMING MICROPOROUS LAYER, METHOD OF PRODUCING FIBROUS SHEET-LIKE COMPOSITE, AND ARTIFICIAL LEATHER	:	

This decision is in response to the "Petition to Continue Processing of National Stage Application" filed 04 December 2001. The required petition fee has been paid.

BACKGROUND

On 30 July 2001, applicant filed a Transmittal Letter to the United States Designated/Elected Office (DO/EO/US) for entry into the national stage in the United States which identified international application **PCT/JP99/00536**. Accompanying the transmittal letter, applicant included: A copy of International Application **PCT/JP00/000536**, a copy of the priority document indicating an International Application number of **PCT/JP00/000536**, an information Disclosure Statement for **PCT/JP00/000536** and an executed declaration identifying the International Application as **PCT/JP00/000536**.

On 16 November 2001, applicants were mailed a communication informing applicant that in order to continue the processing of the present national stage application applicant needed to bring a petition under 37 CFR 1.182 clearly identifying the international application to which the present application is to be directed. Applicant was given **TWO (2) MONTHS** to submit the required reply and informed that failure to timely file would result in abandonment of U.S. application 09/889,570.

On 04 December 2001, the present petition was filed indicating that the international application identified on the transmittal letter contained a typographical error and that the correct international application number is PCT/**JP00**/00536.

DISCUSSION

The identifying information provided on the transmittal letter filed by applicant on 30 July 2001, i.e., the title, applicant-inventor information, priority date, and international filing date all correspond to that of PCT/JP00/00536. For these reasons, as well as the explanation provided in the present petition, the national stage papers filed 30 July 2001 are accepted on petition as sufficiently identifying international application PCT/JP00/00536. Pursuant to petitioner's request, the national stage papers assigned U.S. application number 09/889,570 will be treated as a U.S. national stage submission for PCT/JP00/00536. Further, an examination of the application file shows all of the requirements of 35 U.S.C. 371 for entry into the national stage in the United States have been satisfied.

CONCLUSION

The petition under 37 CFR 1.182 is **GRANTED**.

This application will be given an international application filing date of **01 February 2000** and a date of **30 July 2001** under 35 U.S.C. 371.

This application is being forwarded to the National Stage Processing Branch of the Office of PCT Operations to continue national stage processing of U.S. application number 09/889,570 as the U.S. national stage application of PCT/JP00/00536.

Richard Cole
Legal Examiner
PCT Legal Office

Derek A. Putonen
Petitions Attorney
PCT Legal Office
Tel: (703) 305-0130
Fax: (703) 308-6459

1 8 SEP 2002

UNITED STATES PATENT AND TRADEMARK OFFICE

COMMISSIONER FOR PATENTS
UNITED STATES PATENT AND TRADEMARK OFFICE
WASHINGTON, D.C. 20231
www.uspto.gov

Stephen G. Adrian
ARMSTRONG, WESTERMAN
& HATTORI, LLP
Suite 1000, 1725 K Street, N.W.
Washington, D.C. 20006

In re Application of	:	
Yoshiki NAKAGAWA, et al	:	DECISION ON
Application No.: 09/889,571	:	
PCT No.: PCT/JP00/00452	:	PETITION
Int. Filing Date: 28 January 2000	:	
Priority Date: 28 January 1999	:	UNDER 37 CFR 1.181
Attorney's Docket No.: 010903	:	
For: POLYMER, PROCESS FOR PRODUCING	:	
THE POLYMER AND CURABLE COMPOSITION	:	
CONTAINING THE POLYMER	:	

This decision is responsive to applicant's "PETITION UNDER 37 CFR 1.181 FOR SUPERVISORY REVIEW " filed 05 April 2002.

BACKGROUND

On 28 January 2000, applicants filed international application PCT/JP00/00452, which claimed priority of an earlier Japanese application filed 28 January 1999. A copy of the international application was transmitted on 03 August 2000 to the USPTO from the International Bureau. A DEMAND was timely filed on 26 June 2000 electing the United States. Accordingly, the thirty (30) month time period for paying the basic national fee in the United States of America expired at midnight on 30 July 2001 (the 28th being a Saturday).

On 30 July 2001, applicants filed a Transmittal Letter for entry into the national stage in the United States of America. Filed with the Transmittal Letter was, inter alia, the requisite basic national fee, and an English translation of the international application. No oath or declaration of the inventors accompanied the transmittal letter.

On 14 September 2001, the United States Designated/Elected Office (DO/EO/US) mailed a "NOTIFICATION OF MISSING REQUIREMENTS UNDER 35 U.S.C. 371 IN THE UNITED STATES DESIGNATED/ELECTED OFFICE (DO/EO/US)" (Form PCT/DO/EO/905) which informed applicant, inter alia, that an "Oath or Declaration of the inventors, in compliance with 37 CFR 1.497(a) and(b), identifying the application by International application number and international filing date" must be submitted within two months from its 14 September 2001 date of mailing or by 32 months from the priority date, whichever is later, in order to avoid abandonment of the national stage application.

On 05 April 2002, applicants's representative filed a petition, accompanied with a photocopy of the computer docket showing the due dates recorded for November 14, 2001, which would have been the due date for responding to the Notification of Missing Requirements.

DISCUSSION

A review of the international application reveals that a **NOTIFICATION OF MISSING REQUIREMENTS UNDER 35 U.S.C. 371 IN THE UNITED STATES DESIGNATED/ELECTED OFFICE (DO/EO/US)**" (Form PCT/DO/EO/905) mailed on 14 September 2001 was mailed to the wrong address. However, a new **"NOTIFICATION OF MISSING REQUIREMENTS UNDER 35 U.S.C. 371 IN THE UNITED STATES DESIGNATED/ELECTED OFFICE (DO/EO/US)**" (Form PCT/DO/EO/905) was mailed to applicants' representative correct address on **09 April 2001**, which also set a new time period to respond to the Notice of Missing Requirements to avoid abandonment of the above application.

Accordingly, petitioner's petition is moot since the USPTO mailed the Notice of Missing Requirements to the correct address on 09 April 2001.

CONCLUSION

The petition under 37 CFR 1.181 is **MOOT.**

The application is being returned to the United States Designated/Elected Office (DO/EO/US) for processing in accordance with this decision.

Boris Milef
PCT Legal Examiner
PCT Legal Office

Rafael Bacares
PCT Legal Examiner
PCT Legal Office
Telephone: (703) 308-6312
Facsimile: (703) 308-6459

29 JUN 2004

UNITED STATES PATENT AND TRADEMARK OFFICE

#7

COMMISSIONER FOR PATENTS
UNITED STATES PATENT AND TRADEMARK OFFICE
P.O. BOX 1450
ALEXANDRIA, VA 22313-1450
www.uspto.gov

Monty L. Ross
LOCKE LIDDELL & SAPP
2200 Ross Avenue, Suite 2200
Dallas, TX 75201-6776

In re Application of: WANG, Guocheng	:	
U.S. Application No.: 09/889,574	:	DECISION ON PETITION TO
PCT No.: PCT/CN00/00011	:	REVIVE ABANDONED
International Filing Date: 21 January 2000	:	APPLICATION UNDER 37
Priority Date: 02 February 1999	:	CFR 1.137(b)
Attorney's Docket No.: 65456/80776	:	
For: LIQUID-PERMEABLE MULTILAYER	:	
MEMBRANE FOR ELECTROLYTIC CELL	:	

The petition to revive under 37 CFR 1.137(b) filed 15 March 2004[1] in the above-captioned application is hereby **GRANTED** as follows:

Applicant's statement that "the entire delay in responding to the Office Action from the due date for the reply to the filing of a grantable petition under 37 CFR 1.137(b) was unintentional" meets the requirements of 37 CFR 1.137(b)(3).

Applicants have now submitted a proper response to the outstanding Notification of Missing Requirements, that is, an executed declaration and the small entity surcharge for filing the declaration later than thirty months after the priority date, and the requirements of 37 CFR 1.137(b) have been satisfied. Therefore, the request to revive the application is granted as to the national stage in the United States of America.

This application is being returned to the National Stage Processing Division of the Office of PCT Operations for further processing in accordance with this decision. The date under 35 U.S.C. 371(c)(1), (c)(2), and (c)(4) is 29 January 2004.

Richard M. Ross
PCT Petitions Attorney
PCT Legal Office
Telephone: (703) 308-6155
Facsimile: (703) 308-6459

---

[1] The petition materials filed 15 March 2004 are not present in the application file. However, based on the stamped return postcard included with the copy of the petition resubmitted by applicant on 23 June 2004, it is concluded that the petition was originally filed on 15 March 2004.

UNITED STATES PATENT AND TRADEMARK OFFICE

COMMISSIONER FOR PATENTS
UNITED STATES PATENT AND TRADEMARK OFFICE
P.O. BOX 1450
ALEXANDRIA, VA 22313-1450
www.uspto.gov

KUBOVCIK & KUBOVCIK
SUITE 710
900 17TH STREET NW
WASHINGTON, DC 20006

COPY MAILED
FEB 08 2005
OFFICE OF PETITIONS

FAX RECEIVED
FEB 08 2005
OFFICE OF PETITIONS

CANCELLED

In re Application of
Nakamura, et al.
Application No. 09/889,604
Filed: September 19, 2001
Atty. Dkt. No.: NPR-082

DECISION ON APPLICATION FOR PATENT TERM ADJUSTMENT

This is a decision on the "APPLICATION FOR PATENT TERM ADJUSTMENT UNDER 37 CFR 1.705(b)" filed November 29, 2004.

The application for patent term adjustment ("PTA") under 37 C.F.R. § 1.705(b) is hereby **DISMISSED**.

Applicants request that the Determination of Patent Term Adjustment be corrected from zero days as indicated on the Determination of Patent Term Extension mailed September 10, 2004 to an adjustment of 276 days.

Applicants argue that the instant application is an original application subject to the provisions of 37 CFR 1.702.

The instant application is a national stage entry of PCT/JP00/00162, filed January 14, 2000. In order for a national stage entry of an international application to be subject to the PTA provisions of 35 USC 154(b), the international application must have an international filing date of May 29, 2000 or later. The date on which the international application either complies with 35 USC 371(c) or enters the National Stage is not relevant for determining eligibility for PTA. See, § 4405(a) of the American Inventor's Protection Act ("AIPA"), 35 USC § 363, and 37 CFR § 1.702(f). As the instant application is a national stage entry of an international application filed prior to May 29, 2000, the instant application is not eligible for PTA.

Applicants are give one month from the mail date of the instant decision to proffer additional evidence that the instant application would be subject to PTA. The period of time for reconsideration is not extendible under 37 CFR 1.136(a) or 37 CFR 1.136(b).

The application file is being forwarded to the Publications Division for issuance of a patent.

Telephone inquiries specific to this matter should be directed to Petitions Attorney Alesia M. Brown at (703) 305-0310.

Karin Ferriter
Senior Legal Advisor
Office of Patent Legal Administration
Office of Deputy Commissioner
for Patent Examination Policy

UNITED STATES, PATENT AND TRADEMARK OFFICE

UNITED STATES DEPARTMENT OF COMMERCE
United States Patent and Trademark Office
Address: COMMISSIONER OF PATENTS AND TRADEMARKS
Washington, D.C. 20231
www.uspto.gov

APPLICATION NO.	FILING DATE	FIRST NAMED INVENTOR	ATTORNEY DOCKET NO.	CONFIRMATION NO.
09/889,630	07/19/2001	Ming-Fong Lin	UNMC.63131US	7143

OIPE JC22
MAR 0 5 2002
PATENT & TRADEMARK OFFICE

110 7590 01/22/2002

DANN DORFMAN HERRELL & SKILLMAN
SUITE 720
1601 MARKET STREET
PHILADELPHIA, PA 19103-2307

EXAMINER
CHAKRABARTI, ARUN K

ART UNIT	PAPER NUMBER
1655	

DATE MAILED: 01/22/2002

Paper No. 5

the examiner's

UNITED STATES DEPARTMENT OF COMMERCE
Patent and Trademark Office
COMMISSIONER OF PATENTS AND TRADEMARKS
Washington, D.C. 20231

DEA/FCE-1994

SERIAL NUMBER	FILING DATE	FIRST NAMED APPLICANT	ATTORNEY DOCKET NO.
09/889,630	07/19/2001	Lin	UNMC.63131 US

EXAMINER	
CHAKRABARTI, A	
ART UNIT	PAPER NUMBER
1655	5

DATE MAILED:

Please find below a communication from the EXAMINER in charge of this application

1. The communication filed on October 22, 2001 is non-responsive to the prior Office action because it fails to comply with the Sequence Rules. Specifically, no CRF was received by the Scientific and Technical Information Center. Also, claim 21 was inadvertently not amended though it also contains nucleotide sequences requiring SEQ ID NOs. Since the response appears to be *bona fide*, but through an apparent oversight or inadvertence failed to provide a complete response, applicant is required to complete the response within a TIME LIMIT of ONE MONTH from the date of this letter or within the time remaining in the response period of the last Office action, whichever is longer. Applicant may elect to either extend the period for response set in the last office action up to a maximum of SIX MONTHS or to extend from this ONE MONTH limit under 37 CFR 1.136 (a) or (b) up to SIX MONTHS from the mailing date of this letter.

Conclusion

2. Any inquiry concerning this communication or earlier communications from the examiner should be directed to Arun Chakrabarti , Ph. D., whose telephone number is (703) 306-5818. The examiner can normally be reached on 7:00 AM-4:30 PM from Monday to Friday.

If attempts to reach the examiner by telephone are unsuccessful the examiner's supervisor, Gary Jones, can be reached on (703) 308-1152. The fax phone number for this Group is (703) 305-7401.

Any inquiry of a general nature or relating to the status of this application or proceeding should be directed to the Group receptionist whose telephone number is (703) 308-0196.

Arun Kr. Chakrabarti

Arun Chakrabarti,

Patent Examiner

January 18, 2002

16 MAY 2003

UNITED STATES PATENT AND TRADEMARK OFFICE

COMMISSIONER FOR PATENTS
UNITED STATES PATENT AND TRADEMARK OFFICE
P.O. BOX 1450
ALEXANDRIA, VA 22313-1450
www.uspto.gov

Csaba Henter
Millen, White, Zelano & Branigan, P.C.
Arlington Courthouse Plaza I, Suite 1400
2200 Clarendon Boulevard
Arlington, VA 22201

In re Application of	:	DECISION
Alain RIONDEL et al.	:	
U.S. Application No.: 09/889,699	:	ON
PCT No.: PCT/FR00/00123	:	
International Filing Date: 20 January 2000	:	PETITION
Priority Date: 21 January 1999	:	
Attorney's Docket No.: ATOCM 220	:	UNDER
For: METHOD FOR MAKING AQUEOUS SOLUTIONS	:	
OF UNSATURATED QUATERNARY AMMONIUM	:	37 CFR 1.181
SALTS	:	

This decision is in response to applicants' "REPLY TO NOTICE OF ABANDONMENT" filed 20 June 2002 to request withdrawal of the Notice of Abandonment mailed 31 May 2002. This request has been treated as Petition under 37 C.F.R. § 1.181. No petition fee is required.

BACKGROUND

On 20 January 2000, applicants filed international application PCT/FR00/00123, which claimed a priority date of 21 January 1999. A copy of the international application was transmitted from the International Bureau to the United States Patent and Trademark Office (USPTO) on 27 July 2000. A Demand for international preliminary examination, in which the United States was elected, was filed on 13 March 2000, which was within nineteen months from the priority date. Accordingly, the thirty-month period for paying the basic national fee in the United States expired on 21 July 2001.

On 20 July 2001, applicants filed a submission for entry into the national stage in the United States which was accompanied by, *inter alia*, the U.S. Basic National Fee.

On 29 August 2001, the USPTO mailed Notification of Missing Requirements (Form PCT/DO/EO/905) indicating, *inter alia*, that an oath or declaration in compliance with 37 CFR 1.497(a)-(b) and the surcharge under 37 CFR 1.492(e) for providing the oath or declaration later than thirty months from the priority date were required.

On 31 May 2002, the USPTO mailed Notice of Abandonment indicating that the above-identified application was abandoned for failure to respond to the Notice to File Missing Parts mailed on 29 August 2001.

On 20 June 2002, applicants filed the present petition, which included, *inter alia*, (1) a copy of the returned postcard receipt for the US National Phase filing of PCT/FR00/00123 with both the receipt date of 20 July 2001 and US Application serial number of **09/889665** stamped thereon; (2) a copy of the applicants' response to the Notification of Missing Requirements filed 25 September 2001 with the US Application serial number 09/889,665 in the heading of the response; and (3) a copy of the returned postcard receipt for the response to the Notification of Missing Requirements with the receipt date of 25 September 2001 stamped thereon.

DISCUSSION

The applicants' response to the Notification of Missing Requirements with the receipt date of 25 September 2001 stamped thereon by the USPTO has been found in the US Application number 09/889,665. Although the heading of the applicants' response includes the US Application serial number 09/889,665, other identifying information in the heading, i.e. International Application No., International Filing Date, Deposit Date of US National Phase, Priority Date, Applicants name, and Title, clearly establishes that the response is directed to US Application number 09/889,699. Consequently, the applicants' response to the Notification of Missing Requirements is being considered as being timely submitted.

The check filed with the applicants' response of 25 September 2001 for the declaration surcharge and recordation of assignment papers was applied to the US Application number 09/889,665. This fee will be transferred from 09/889,665 and reapplied to the instant application. Further, the same fee for the declaration and recordation for the instant application was also charged to the counsel's deposit account on 09 September 2002. This fee will be fully refunded to the counsel's deposit account.

CONCLUSION

For the reasons set forth above, the petition under 37 CFR 1.181 is **GRANTED**.

The Notice of Abandonment mailed 31 May 2002 is **VACATED**.

The application is being forwarded to the National Stage Processing Division of the Office of the PCT Operations for continued processing including mailing of a NOTICE OF ACCEPTANCE OF APPLICATION UNDER 35 U.S.C. 371 AND 37 CFR 1.494 OR 1.495

(Form PCT/DO/EO/903) and FILING RECEIPT.

Harry C. Kim
PCT Special Program Examiner
Office of PCT Legal Administration
Telephone: (703) 308-2248
Facsimile: (703) 308-6459

Leonard Smith
PCT Legal Examiner
Office of PCT Legal Administration

07 FEB 2003

UNITED STATES PATENT AND TRADEMARK OFFICE

COMMISSIONER FOR PATENTS
UNITED STATES PATENT AND TRADEMARK OFFICE
WASHINGTON, D.C. 20231
www.uspto.gov

Judith M. Riley
GIFFORD, KRAS, GROH, SPRINKLE, ANDERSON & CITKOWSKI
280 N. Old Woodward Avenue
Suite 400
Birmingham, MI 48009

In re Application of	:	
ROSS, Ralph, et al.	:	
U.S. Application No.: 09/889,834	:	DECISION ON RENEWED
PCT No.: PCT/GB00/00176	:	PETITION UNDER
International Filing Date: 24 January 2000	:	37 CFR 1.47(a)
Priority Date: 23 January 1999	:	
Attorney's Docket No.: CAF-28502/03	:	
For: CARGO HANDLING APPARATUS	:	

This decision is issued in response to the "Renewed Petition Under 37 CFR 1.47(a)" filed on 11 October 2002. No additional petition fee is required.

BACKGROUND

The procedural background for this application is set forth in detail in the decision mailed by this Office on 29 August 2002. In that decision, applicant's original petition under 37 CFR 1.47(a) was dismissed without prejudice for failure to satisfy all the requirements of a grantable petition under 37 CFR 1.47(a). Specifically, the decision held that applicant had failed to provide the required firsthand evidence that the nonsigning inventor had been provided with a copy of the complete application papers and had refused to execute the application.

On 11 October 2002, applicant filed the renewed petition considered herein.

DISCUSSION

The materials submitted with the renewed petition (and specifically, the declaration of Marc D. Schneider with its first hand statement regarding the delivery of a copy of the complete application to the nonsigning inventor and the subsequent refusal to execute the application), taken in combination with the previous submission, satisfy all the requirements for a grantable petition under 37 CFR 1.47(a). The petition is therefore appropriately granted.

CONCLUSION

For the reasons discussed above, the renewed petition filed under 37 CFR 1.47(a) is **GRANTED**.

The application is accepted without the signature of the nonsigning inventor, Michael CRABTREE.

As provided in 37 CFR 1.47(a), a notice of the filing of this application will be forwarded to the nonsigning inventor at the last known address of record as set forth in the petition, and a notice of the filing of the application under 37 CFR 1.47(a) will be published in the Official Gazette.

The application is being forwarded to the National Stage Processing Branch of the International Division for further processing in accordance with this decision. The 35 U.S.C. 371 date is 28 November 2001.

Richard M. Ross
PCT Petitions Attorney
PCT Legal Office
Telephone: (703) 308-6155
Facsimile: (703) 308-6459

07 FEB 2003

UNITED STATES PATENT AND TRADEMARK OFFICE

COMMISSIONER FOR PATENTS
UNITED STATES PATENT AND TRADEMARK OFFICE
WASHINGTON, D.C. 20231
www.uspto.gov

Mr. Michael Crabtree
C/O Wayne S. Breyer
DeMont & Breyer, LLC
P.O. Box 7490
Shrewsbury, New Jersey 07702

In re Application of: ROSS, Ralph, et al.
U.S. Application No.: 09/889,834
PCT No.: PCT/GB00/00176
International Filing Date: 24 January 2000
Priority Date: 23 January 1999
Attorney's Docket No.: CAF-28502/03
For: CARGO HANDLING APPARATUS

Dear Mr. Crabtree:

You are identified as an inventor in the above identified United States patent application, filed under the provisions of 37 CFR 1.47(a). Should a patent be granted, you will be designated as an inventor.

As a named inventor, you are entitled to inspect any paper in the file wrapper of the application, order copies of all or any part thereof (at a prepaid cost per 37 CFR 1.19) or to make your position of record in the application. Alternatively, you may arrange to do any of the preceding through a registered patent agent or attorney presenting written authorization from you. If you care to join in the application, counsel of record (see below) would presumably assist you. Joining in the application would entail the filing of an appropriate oath or declaration by you pursuant to 37 CFR 1.63.

Richard M. Ross
PCT Petitions Attorney
PCT Legal Office
Telephone: (703) 308-6155
Facsimile: (703) 308-6459

Counsel of Record:
Judith M. Riley
GIFFORD, KRAS, GROH, SPRINKLE, ANDERSON & CITKOWSKI
280 N. Old Woodward Avenue
Suite 400
Birmingham, MI 48009

2 9 AUG 2002

UNITED STATES PATENT AND TRADEMARK OFFICE

COMMISSIONER FOR PATENTS
UNITED STATES PATENT AND TRADEMARK OFFICE
WASHINGTON, D.C. 20231
www.uspto.gov

Judith M. Riley
GIFFORD, KRAS, GROH, SPRINKLE, ANDERSON & CITKOWSKI
280 N. Old Woodward Avenue
Suite 400
Birmingham, MI 48009

In re Application of	:	
ROSS, Ralph, et al.	:	
U.S. Application No.: 09/889,834	:	DECISION ON PETITION
PCT No.: PCT/GB00/00176	:	UNDER 37 CFR 1.47(a)
International Filing Date: 24 January 2000	:	
Priority Date: 23 January 1999	:	
Attorney's Docket No.: CAF-28502/03	:	
For: CARGO HANDLING APPARATUS	:	

This decision is issued in response to the "Petition For Filing Application By Other Than All The Inventors Under 37 CFR 1.47(a)" filed on 22 February 2002. In a supplemental submission filed 25 February 2002, applicants included the required petition fee.

BACKGROUND

On 24 January 2000, applicants filed international application PCT/GB00/00176 which claimed a priority date of 23 January 1999 and which designated the United States. On 27 July 2000, a copy of the international application was transmitted to the United States Patent And Trade Office ("USPTO") by the International Bureau ("IB").

On 18 August 2000, a Demand was filed with the International Preliminary Examining Authority electing the United States. The election was made prior to the expiration of nineteen months from the priority date. As a result, the deadline for payment of the basic national fee was extended to expire thirty months from the priority date, i.e., 23 July 2001.

On 23 July 2001, applicants filed a transmittal letter for entry into the national stage in the United States accompanied by, among other materials, payment of the basic national fee.

On 30 August 2001, the United States Designated/Elected Office (DO/EO/US) mailed a Notification of Missing Requirements Under 35 U.S.C. 371 (Form PCT/DO/EO/905) indicating that an oath or declaration in compliance with 37 CFR 1.497 and the surcharge for filing the declaration later than thirty months after the priority date was required. The Notification also informed applicants that the failure to submit the declaration within two months of the date of the Notification would result in abandonment of the application.

On 28 November 2001, applicants filed a response to the Notification Of Missing Requirements (including the necessary extension fee) which was accompanied by the required

surcharge payment and a declaration executed by Ralph Ross, one of the two named inventors; the declaration was not executed by the second inventor Michael Wayne Crabtree. The submission stated that a petition under 37 CFR 1.47 would be forthcoming.

Despite the fact that applicants had failed to submit a fully executed declaration, on 12 December 2001, the DO/EO/US mailed a Notification Of Acceptance stating that 28 November 2001 was the receipt date for the requirements of 35 U.S.C. 371.

On 22 February 2002, applicants filed the petition considered herein, seeking acceptance of the application without the signature of Mr. Crabtree, who applicants claim has refused to execute the application. In order to make the petition a timely response to the Notification Of Missing Requirements mailed 30 August 2001, applicants have been charged the fee for a four month extension of time. Based on this extension, the petition is considered a timely response to the Notification Of Missing Requirements.

DISCUSSION

A grantable petition under 37 CFR 1.47(a) must be accompanied by: (1) the fee under 37 CFR 1.17; (2) a statement of the last known address of the non-signing inventor; (3) an oath or declaration by the other inventors on behalf of themselves and the non-signing inventor; and (4) factual proof that the inventor refuses to execute the application or cannot be reached after diligent effort. As discussed below, applicants here have satisfied all these requirements.

Regarding the petition fee, applicants have submitted a payment in the amount of $130. Item (1) is therefore satisfied.

The petition specifically sets forth the address of the nonsigning inventor, Michael Wayne Crabtree. Accordingly, item (2) is satisfied.

Regarding item (3), section 409.03(a) of the Manual of Patent Examining Procedure ("MPEP") states that:

> An oath or declaration signed by all the available joint inventors with the signature block of the nonsigning inventor(s) left blank may be treated as having been signed by all the available joint inventors on behalf of the nonsigning inventor(s), unless otherwise indicated.

Applicants here have filed a declaration executed by co-inventor Ralph Ross and containing an unsigned signature block for the nonsigning inventor. Pursuant to the MPEP, this declaration has been treated as having been signed by co-inventor Ross on his own behalf and on behalf of the nonsigning inventor. Item (3) is therefore satisfied.

Regarding item (4), applicants' assert that Mr. Crabtree refuses to execute the application. Here, the evidence submitted by applicants to demonstrate Mr. Crabtree's refusal to execute the application is contained in the petition and its attachments, most specifically in the 18 October 2001 letter from Mr. Wayne S. Breyer, counsel for the nonsigning inventor. In that letter, Mr. Breyer expressly states that Mr. Crabtree's signature "will not be forthcoming." However, applicants have not provided evidence that Mr. Crabtree has been provided with a complete copy of the present application (including description, claims, and drawings), a prerequisite to asserting a refusal to sign (the Breyer letter implies familiarity with the application, but it is not conclusive on this point). In addition, a statement from Mr. Shanks, the attorney with firsthand knowledge of the communications with the nonsigning inventor and to whom the refusal was made, is also required (see MPEP 409.03(d)). On the current record, item (4) is not satisfied.

Applicants' have failed to satisfy all the requirements of a grantable petition under 37 CFR 1.47(a).

Finally, applicants have included with the petition a request for a corrected filing receipt because the filing receipt mailed on 12 December 2001 fails to list Mr. Crabtree as an inventor. Both the filing receipt and the Notification Of Acceptance were issued prematurely in that applicants have not yet satisfied the requirements for entry into the national stage. Accordingly, the filing receipt and Notification Of Acceptance will be vacated. Should applicants successfully complete entry into the national stage, a new Notification Of Acceptance and filing receipt will be issued, and such filing receipt will be made to include both inventors' names.

CONCLUSION

The petition under 37 CFR 1.47(a) is **DISMISSED** without prejudice.

The Notification Of Acceptance mailed 12 December 2001 and the filing receipt mailed 12 December 2001 are hereby **VACATED**.

If reconsideration on the merits of this petition is desired, a proper response must be filed within **TWO (2) MONTHS** from the mail date of this decision. Any reconsideration request should include a cover letter entitled "Renewed Petition Under 37 CFR 1.47(a)" and should include adequate evidence that the nonsigning inventor has been presented with a copy of the complete application and the firsthand statement from Mr. Shanks, as discussed above and in the form required by MPEP § 409.03(d). No additional petition fee is required. Failure to file a timely response will result in abandonment of the application.

Please direct further correspondence with respect to this matter to the Assistant Commissioner for Patents, Box PCT, Washington, D.C. 20231, and address the contents of the letter to the attention of the International Division, Legal Staff.

Richard Cole
PCT Legal Examiner
PCT Legal Office

Richard M. Ross
PCT Petitions Attorney
PCT Legal Office
Telephone: (703) 308-6155
Facsimile: (703) 308-6459

RMR/RC:rmr

MAR 1 5 2002

UNITED STATES PATENT AND TRADEMARK OFFICE

COMMISSIONER FOR PATENTS
UNITED STATES PATENT AND TRADEMARK OFFICE
WASHINGTON, D.C. 20231
www.uspto.gov

PITNEY, HARDIN, KIPP & SZUCH LLP
711 THIRD AVENUE
20TH FLOOR
NEW YORK, NY 10017

In re Application of	:	
FRED A. KISH (deceased)	:	DECISION ON
Application No.: 09/889,843	:	
PCT No.: PCT/US00/01702	:	PETITION
Int. Filing Date: 24 January 2000	:	
Priority Date: 29 January 1999	:	UNDER 37 CFR 1.42
Attorney Docket no.: 3029-72 US	:	
For: SELF REGULATING FLEXIBLE HEATER	:	

This is a decision on a submission under 37 CFR 1.42, filed in the United States Patent and Trademark Office (USPTO), in response to a Notification of Missing Requirements, on 08 January 2002.

BACKGROUND

On 20 July 2001, applicant filed a Transmittal Letter requesting entry into the national stage in the United States of America under 35 U.S.C. § 371. Filed with the Transmittal Letter were, *inter alia*, the requisite basic national fee. In response to the Notification of Missing Requirements mailed on 31 August 2001, and to satisfy the requirement that an oath or declaration of the inventors be furnished, applicant filed a declaration on 08 January 2002 that was signed by inventors James Surjan, Tilak R.Varma and Edward Bulgajewski and by Antoinette Chiovatero for inventor Fred A. Kish (deceased). The submission was treated as a request for status under 37 CFR 1.42.

DISCUSSION

Pursuant to 37 CFR § 1.42, first sentence:

"In case of the death of the inventor, the legal representative (executor, administrator, etc.) of the deceased inventor may make the necessary oath or declaration, and apply for and obtain a patent."

37 CFR 1.497(a)(3) requires that the declaration identify each inventor and the country of citizenship of each inventor. 37 CFR 1.497(b)(2) requires the declaration to state the relationship

of the person (under 37 CFR 1.42) making the declaration for a deceased inventor. 37 CFR 1.497(b)(2) further states that, if the person signing the oath or declaration is the legal representative of a deceased inventor, the oath or declaration must state that the person is a legal representative and indicate the citizenship, residency and mailing address of the legal representative.

The declaration submitted on 08 January 2002 is executed by inventors James Surjan, Tilak R. Varma and Edward Bulgajewski as identified in the published international application. The declaration is also signed by Antoinette Chiovatero for the deceased inventor, Fred A. Kish, without identifying her relationship to the deceased inventor. It appears that the declaration states the country of citizenship, residency and mailing address of Antoinette Chiovatero, but does not provide the same information for deceased inventor as required for compliance with 37 CFR 1.497(a)(3).

The declaration is unacceptable because it does not clearly state the country of citizenship, former residency and mailing address of both the deceased inventor and the legal representative, as required for compliance with 37 CFR 1.497. See also 37 CFR 1.64. The declaration must also clearly state the relationship of the legal representative to the deceased inventor. Accordingly, it is inappropriate, at this time, to accord the application status under 37 CFR 1.42.

CONCLUSION

For the above reasons, the request for status under 37 CFR 1.42 is presently DISMISSED WITHOUT PREJUDICE.

If reconsideration of the merits of the request for status under 37 CFR 1.42 is desired, applicant is required to correct the above-noted defects including the furnishing of an oath/declaration in compliance with 37 CFR 1.42 and 1.497 within TWO (2) MONTHS from the mail date of this Decision. Failure to respond will result in the abandonment of the application. Any reconsideration request should include a cover letter entitled "Renewed Submission Under 37 CFR 1.42."

Extensions of time are available under 37 CFR 1.136(a).

Any further correspondence with respect to this matter should include a cover letter entitled "Renewed Request Under 37 CFR 1.42" and be addressed to the Assistant Commissioner for Patents, Box PCT, Washington, D.C. 20231, with the contents of the letter marked to the attention of the PCT Legal Office.

Boris Milef
Legal Examiner
PCT Legal Office

Cynthia M. Kratz
Attorney Advisor
PCT Legal Office

CMK/BM:cmk
Telephone: (703) 306-5467

04 JUN 2002

UNITED STATES PATENT AND TRADEMARK OFFICE

COMMISSIONER FOR PATENTS
UNITED STATES PATENT AND TRADEMARK OFFICE
WASHINGTON, D.C. 20231
www.uspto.gov

PITNEY, HARDIN, KIPP & SZUCH LLP
685 THIRD AVENUE
NEW YORK, NY 10017

In re Application of	:	
FRED A. KISH (deceased)	:	DECISION ON
Application No.: 09/889,843	:	
PCT No.: PCT/US00/01702	:	PETITION
Int. Filing Date: 24 January 2000	:	
Priority Date: 29 January 1999	:	UNDER 37 CFR 1.42
Attorney Docket no.: 3029-72 US	:	
For: SELF REGULATING FLEXIBLE HEATER	:	

This is a decision on applicant's "Renewed Submission Under 37 CFR 1.42", filed in the United States Patent and Trademark Office (USPTO) on 30 April 2002.

BACKGROUND

In response to the Notification of Missing Requirements mailed on 31 August 2001, and to satisfy the requirement that an oath or declaration of the inventors be furnished, applicant filed a declaration on 08 January 2002 that was signed by inventors James Surjan, Tilak R.Varma and Edward Bulgajewski and by Antoinette Chiovatero for inventor Fred A. Kish (deceased). The submission was treated as a request for status under 37 CFR 1.42.

On 15 March 2002, a decision was mailed to applicant dismissing the petition under 37 CFR 1.42 on the grounds that the declaration did not clearly state the country of citizenship, former residency and mailing address of both the deceased inventor and the legal representative, and did not clearly state the relationship of the legal representative to the deceased inventor as required for compliance with 37 CFR 1.497

On 30 April 2002, applicant submitted the instant renewed petition under 37 CFR 1.42 along with a statement "Added Page to Combined Declaration and Power of Attorney under 37 CFR 1.42", signed by Antoinette Chiovatero, executrix for deceased inventor Fred A. Kish.

DISCUSSION

The submission of 30 April 2002 consists of an added page to the declaration which identifies Antoinette Chiovatero as the executrix for deceased inventor, Fred A. Kish and provides Ms. Chiovatero's citizenship, residency and mailing address. The statement also states the country of citizenship, residency and last known mailing address of Fred A. Kish as required

for compliance with 37 CFR 1.497. However, Ms. Chiovatero's declaration does not comply with the requirements of 37 CFR 1.68 because it does not indicate that all statements are made of her own knowledge are true and all statements, made upon information and belief, are believed to be true; and further that these statements are made with the knowledge that willful false statements and the like are punishable by fine or imprisonment, or both under 18 U.S.C. 1001 and that such willful false statements may jeopardize the validity of the application.

Accordingly, it is inappropriate, at this time, to accord the application status under 37 CFR 1.42.

CONCLUSION

For the above reasons, the request for status under 37 CFR 1.42 is presently **DISMISSED WITHOUT PREJUDICE.**

If reconsideration of the merits of the request for status under 37 CFR 1.42 is desired, applicant is required to correct the above-noted defects including the furnishing of an oath/declaration in compliance with 37 CFR 1.42 and 1.497 within **TWO (2) MONTHS** from the mail date of this Decision. Failure to respond will result in the abandonment of the application. Any reconsideration request should include a cover letter entitled "Renewed Submission Under 37 CFR 1.42."

Extensions of time are available under 37 CFR 1.136(a).

Any further correspondence with respect to this matter should include a cover letter entitled "Renewed Request Under 37 CFR 1.42" and be addressed to the Assistant Commissioner for Patents, Box PCT, Washington, D.C. 20231, with the contents of the letter marked to the attention of the PCT Legal Office.

Richard R. Cole
Legal Examiner
PCT Legal Office

Cynthia M. Kratz
Attorney Advisor
PCT Legal Office

CMK/RRC:cmk
Telephone: (703) 306-5467

24 SEP 2002
UNITED STATES PATENT AND TRADEMARK OFFICE

COMMISSIONER FOR PATENTS
UNITED STATES PATENT AND TRADEMARK OFFICE
WASHINGTON, D.C. 20231
www.uspto.gov

PITNEY, HARDIN, KIPP & SZUCH LLP
685 THIRD AVENUE
NEW YORK, NY 10017

In re Application of	:	
FRED A. KISH (deceased)	:	DECISION ON
Application No.: 09/889,843	:	
PCT No.: PCT/US00/01702	:	PETITION
Int. Filing Date: 24 January 2000	:	
Priority Date: 29 January 1999	:	UNDER 37 CFR 1.42
Attorney Docket no.: 3029-72 US	:	
For: SELF REGULATING FLEXIBLE HEATER	:	

This is a decision on applicant's second "Renewed Submission Under 37 CFR 1.42", filed in the United States Patent and Trademark Office (USPTO) on 22 July 2002.

BACKGROUND

In response to the Notification of Missing Requirements mailed on 31 August 2001, and to satisfy the requirement that an oath or declaration of the inventors be furnished, applicant filed a declaration on 08 January 2002 that was signed by inventors James Surjan, Tilak R.Varma and Edward Bulgajewski and by Antoinette Chiovatero for inventor Fred A. Kish (deceased). The submission was treated as a request for status under 37 CFR 1.42.

On 15 March 2002, a decision was mailed to applicant dismissing the petition under 37 CFR 1.42 on the grounds that the declaration did not clearly state the country of citizenship, former residency and mailing address of both the deceased inventor and the legal representative, and did not clearly state the relationship of the legal representative to the deceased inventor as required for compliance with 37 CFR 1.497

On 30 April 2002, applicant submitted the instant renewed petition under 37 CFR 1.42 along with a statement "Added Page to Combined Declaration and Power of Attorney under 37 CFR 1.42", signed by Antoinette Chiovatero, executrix for deceased inventor Fred A. Kish.

On 04 June 2002, a decision on the renewed petition was mailed to applicant indicating that Ms. Chiovatero's declaration did not comply with the requirements of 37 CFR 1.68 because

it did not indicate that all statements made of her own knowledge are true and all statements, made upon information and belief, are believed to be true; and further that these statements are made with the knowledge that willful false statements and the like are punishable by fine or imprisonment, or both under 18 U.S.C. 1001 and that such willful false statements may jeopardize the validity of the application.

DISCUSSION

The submission of 22 July 2002 consists of an added page to the declaration which identifies Antoinette Chiovatero as the executrix for deceased inventor, Fred A. Kish and provides Ms. Chiovatero's citizenship, residency and mailing address. The statement also states the country of citizenship, residency and former known mailing address of Fred A. Kish as required for compliance with 37 CFR 1.497. Ms. Chiovatero's declaration now complies with the requirements of 37 CFR 1.68. Ms. Chiovatero state that all statements made of her own knowledge are true and all statements, made upon information and belief, are believed to be true; and further that these statements are made with the knowledge that willful false statements and the like are punishable by fine or imprisonment, or both under 18 U.S.C. 1001 and that such willful false statements may jeopardize the validity of the application.

Accordingly, it is appropriate, at this time, to accord the application status under 37 CFR 1.42.

CONCLUSION

For the above reasons, the request for status under 37 CFR 1.42 is presently **GRANTED**.

The application will be forwarded to the United States Designated/Elected Office for further processing. The 35 U.S.C.371 date is **22 July 2002.**

Leonard Smith

Boris Milef
Legal Examiner
PCT Legal Office

Cynthia M. Kratz

Cynthia M. Kratz
Attorney Advisor
PCT Legal Office

CMK/BM:cmk
Telephone: (703) 306-5467

UNITED STATES PATENT AND TRADEMARK OFFICE

Commissioner for Patents
United States Patent and Trademark Office
P.O. Box 1450
Alexandria, VA 22313-1450
www.uspto.gov

APR - 7 2005

GEORGE A. LOUD
3137 MOUNT VERNON AVENUE
ALEXANDRIA VA 22305

In re Application of	:
Shozo Shoji	:
Serial No.: 09/889,845	: PETITION DECISION
Filed: July 23, 2001	:
Attorney Docket No.: MIT-C102	:

This is in response to the petition under 37 CFR 1.181, filed January 11, 2005, requesting withdrawal of abandonment based on timely filing of a reply.

A review of the file history shows that the examiner mailed an Office action to applicant on February 13, 2004, setting a one month extendable time period for reply. Upon failure to receive a reply the application was held abandoned by Notice of Abandonment mailed December 14, 2004. Applicant states that a reply was submitted on March 2, 2004, which included a corrected sequence listing and disk. Applicant provides an Office date stamped postcard as evidence of Office receipt. Applicants have resubmitted the reply with the petition. In view of applicants' timely reply the Notice of Abandonment is withdrawn and the application restored to pending status with the mailing of this decision.

The petition is **GRANTED**.

The application will be forwarded to the examiner for further consideration.

Should there be any questions about this decision please contact William R. Dixon, Jr., by letter addressed to Director, TC 1600, at the address listed above, or by telephone at 571-272-0519 or by facsimile sent to the general Office facsimile number 571-273-8300.

Jasemine C. Chambers
Director, Technology Center 1600

UNITED STATES PATENT AND TRADEMARK OFFICE

Commissioner for Patents
United States Patent and Trademark Office
P.O. Box 1450
Alexandria, VA 22313-1450
www.uspto.gov

FINNEGAN HENDERSON FARABOW
GARRETT & DUNNER LLP
1300 I STREET NW
WASHINGTON DC 20005

COPY MAILED

JUL 13 2004

OFFICE OF PETITIONS

In re Application of	:	
Yasushi Kaneko et al	:	
Application No. 09/889,852	:	DECISION GRANTING PETITION
Filed: July 23, 2001	:	UNDER 37 CFR 313(c)(2)
Attorney Docket No. 01165.0823	:	

This is a decision on the petition, filed July 12, 2004, under 37 CFR 1.313(c)(2) to withdraw the above-identified application from issue after payment of the issue fee.

The petition is **GRANTED**.

The above-identified application is withdrawn from issue for consideration of a submission under 37 CFR 1.114 (request for continued examination). See 37 CFR 1.313(c)(2).

Petitioner is advised that the issue fee paid on May 10, 2004 in the above-identified application cannot be refunded. If, however, the above-identified application is again allowed, petitioner may request that it be applied towards the issue fee required by the new Notice of Allowance.[1]

Telephone inquiries should be directed to the undersigned at (703) 305-8680.

This matter is being referred to Technology Center AU 2871 for processing of the request for continued examination under 37 CFR 1.114 and for consideration of the concurrently filed Information Disclosure Statement.

Frances Hicks
Petitions Examiner
Office of Petitions
Office of the Deputy Commissioner
for Patent Examination Policy

---

[1] The request to apply the issue fee to the new Notice may be satisfied by completing and returning the new Issue Fee Transmittal Form PTOL-85(b), which includes the following language thereon: "Commissioner for Patents is requested to apply the Issue Fee and Publication Fee (if any) or re-apply any previously paid issue fee to the application identified above." Petitioner is advised that, whether a fee is indicated as being due or not, the Issue Fee Transmittal Form **must** be completed and timely submitted to avoid abandonment. Note the language in bold text on the first page of the Notice of Allowance and Fee(s) Due (PTOL-85).

26 JUN 2002

HRT
KH

UNITED STATES PATENT AND TRADEMARK OFFICE

Commissioner for Patents
United States Patent and Trademark Office
Washington, D.C. 20231
www.uspto.gov

Hans R. Troesch
Fish & Richardson
2200 Sand Hill Road
Suite 100
Menlo Park, CA 94025

RECEIVED
JUL 09 2002
FISH & RICHARDSON, P.C.

Ep

In re Application of Paul EDMONDS, et al Application No.: 09/856,931 PCT No.: PCT/US00/01547 Int. Filing Date: 21 January 2000 Priority Date: 21 January 1999 Attorney's Docket No.: 09872-002003 For: UNIVERSAL INTERFACE FOR VOICE ACTIVATED ACCESS TO MULTIPLE INFORMATION PROVIDERS	DECISION ON PETITION UNDER 37 CFR 1.137(b)

This is in response to the "Petition For Revival Of An International Application for Patent Designating The U.S. Abandoned Unintentionally Under 37 CFR 1.137(b) " filed on 09 May 2002.

BACKGROUND

On 21 January 2000, this international application was filed, claiming an earliest priority date of 21 January 1999.

On 21 August 2000, a Demand electing the United States was filed in this international application. Accordingly, the deadline for paying the basic national fee in the United States under 35 U.S.C. 371 and 37 CFR 1.495 was 23 July 2001 (July 21, 2001 being a Saturday).

On 23 July 2001, applicant filed entry into the national stage in the United States but no executed oath or declaration or basic national fee was filed at such time.

On 15 February 2002, the United States Designated/Elected Office mailed a Notification of Abandonment indicating that applicant has failed to provide the full U.S. Basic National Fee by 30 months, and that there was no deposit account.

On 09 May 2002, applicant filed in the United States Patent and Trademark Office (PTO) the instant petition, which was accompanied by, *inter alia*, the basic national fee. No executed oath or declaration was submitted at such time.

DISCUSSION

A grantable petition to revive an abandoned application under 37 CFR 1.137(b) must be accompanied by (1) the required reply, unless previously filed. In a nonprovisional application abandoned for failure to prosecute, the required reply may be met by the filing of a continuing application; (2) the petition fee as set forth in § 1.17(m); and (3) a statement that the entire delay in filing the required reply from the due date for the reply until the filing of a grantable petition pursuant to this paragraph was unintentional. The Commissioner may require additional information where there is a question whether the delay was unintentional; and (4) any terminal disclaimer (and fee as set forth in § 1.20 (d)) required pursuant to paragraph (c) of this section.

Petitioner has provided: (1) the proper reply by submitting the basic national filing fee, (2) the petition fee set forth in §1.17(m) and (3) the proper statement under 137(b)(3). In this application, no terminal disclaimer is required.

Accordingly, the petition is deemed to satisfy requirements (1), (2), (3) and, (4) under 37 CFR 1.137(b).

DECISION

The petition under 37 CFR 1.137(b) is **GRANTED**.

This application is being returned to the United States Designated/Elected Office (DO/EO/US) for continued processing under 35 U.S.C. 371.

Rafael Bacares
PCT Legal Examiner
PCT Legal Office
Tel: (703) 308-6312
Fax: (703) 308-6459

17 JUL 2002

UNITED STATES PATENT AND TRADEMARK OFFICE

Commissioner for Patents
United States Patent and Trademark Office
Washington, D.C. 20231
www.uspto.gov

#5

Hans R. Troesch
Fish & Richardson
2200 Sand Hill Road
Suite 100
Menlo Park, CA 94025

In re Application of Paul EDMONDS, et al Application No.: 09/889,911 PCT No.: PCT/US00/01547 Int. Filing Date: 21 January 2000 Priority Date: 21 January 1999 Attorney's Docket No.: 09872-002003 For: UNIVERSAL INTERFACE FOR VOICE ACTIVATED ACCESS TO MULTIPLE INFORMATION PROVIDERS	DECISION ON PETITION UNDER 37 CFR 1.137(b)

This is in response to the "Petition For Revival Of An International Application for Patent Designating The U.S. Abandoned Unintentionally Under 37 CFR 1.137(b) " filed on 09 May 2002.

BACKGROUND

On 21 January 2000, this international application was filed, claiming an earliest priority date of 21 January 1999.

On 21 August 2000, a Demand electing the United States was filed in this international application. Accordingly, the deadline for paying the basic national fee in the United States under 35 U.S.C. 371 and 37 CFR 1.495 was 23 July 2001 (July 21, 2001 being a Saturday).

On 23 July 2001, applicant filed entry into the national stage in the United States but no executed oath or declaration or basic national fee was filed at such time.

On 15 February 2002, the United States Designated/Elected Office mailed a Notification of Abandonment indicating that applicant has failed to provide the full U.S. Basic National Fee by 30 months, and that there was no deposit account.

On 09 May 2002, applicant filed in the United States Patent and Trademark Office (PTO) the instant petition, which was accompanied by, *inter alia*, the basic national fee. No executed oath or declaration was submitted at such time.

DISCUSSION

A grantable petition to revive an abandoned application under 37 CFR 1.137(b) must be accompanied by (1) the required reply, unless previously filed. In a nonprovisional application abandoned for failure to prosecute, the required reply may be met by the filing of a continuing application; (2) the petition fee as set forth in § 1.17(m); and (3) a statement that the entire delay in filing the required reply from the due date for the reply until the filing of a grantable petition pursuant to this paragraph was unintentional. The Commissioner may require additional information where there is a question whether the delay was unintentional; and (4) any terminal disclaimer (and fee as set forth in § 1.20 (d)) required pursuant to paragraph (c) of this section.

Petitioner has provided: (1) the proper reply by submitting the basic national filing fee, (2) the petition fee set forth in §1.17(m) and (3) the proper statement under 137(b)(3). In this application, no terminal disclaimer is required.

Accordingly, the petition is deemed to satisfy requirements (1), (2), (3) and, (4) under 37 CFR 1.137(b).

DECISION

The petition under 37 CFR 1.137(b) is **GRANTED**.

This application is being returned to the United States Designated/Elected Office (DO/EO/US) for continued processing under 35 U.S.C. 371.

Rafael Bacares
PCT Legal Examiner
PCT Legal Office
Tel: (703) 308-6312
Fax: (703) 308-6459

03 AUG 2004

#14

UNITED STATES PATENT and TRADEMARK OFFICE

COMMISSIONER FOR PATENTS
UNITED STATES PATENT AND TRADEMARK OFFICE
P.O BOX 1450
ALEXANDRIA, VA 22313-1450
www.uspto.gov

FISH & RICHARDSON P.C.
3300 DAIN RAUSCHER PLAZA
MINNEAPOLIS MN 55402

In re Application of	:	
Paul Edmonds	:	DECISION ON
Application No.: 09/889,911	:	
Int. Filing Date: 21 January 1999	:	REQUEST UNDER
Priority Date: 21 January 2000	:	
Attorney's Docket No.: 09872-002003	:	37 CFR 1.497(d)
For: UNIVERSAL INTERFACE FOR VOICE	:	
ACTIVATED ACCESS TO MULTIPLE	:	
INFORMATION PROVIDERS	:	

This is a decision on applicants' "REQUEST FOR ADDITION OF INVENTOR" filed on 06 May 2004, which is being treated under 37 CFR 1.497(d) naming additional inventors, Stephen Co and David Weinstein, in the executed declaration.

BACKGROUND

On 17 July 2002, the petition under 37 CFR 1.137(b) was granted. However, at that time no executed declaration or oath was submitted.

On 03 July 2003, the United States Designated/Elected Office (DO/EO/US) mailed a "NOTIFICATION OF MISSING REQUIREMENTS UNDER 35 U.S.C. 371 IN THE UNITED STATES DESIGNATED/ELECTED OFFICE (DO/EO/US)" (Form PCT/DO/EO/905) which informed applicant, inter alia, that an "Oath or Declaration of the inventors, in compliance with 37 CFR 1.497(a) and (b), identifying the application by International application number and international filing date must be submitted within two months from its 03 July 2003 date of mailing or by 32 months from the priority date, whichever is later, in order to avoid abandonment of the national stage application.

On 10 February 2004, applicants faxed true copies of the "Response to Notification of Missing Requirements" filed on 30 September 2003. This was evidenced by a copy of the "Express Mail" receipt No. EV 321 387 291 US.

On 06 April 2004, the United States Designated/Elected Office (DO/EO/US) mailed a "NOTIFICATION OF DEFECTIVE RESPONSE" (Form PCT/DO/EO/916) indicating that the oath or declaration does not comply with 37 CFR 1.497(a) and (b) in that it is executed by inventors not listed on International Application.

On 10 June 2003, applicants filed a "REQUEST FOR ADDITION OF INVENTOR," which included, *inter alia*, a statement under 37 CFR.1.497(d) adding Stephen Co and David Weinstein who were not originally listed in the PCT application.

DISCUSSION

A submission under 37 CFR 1.497(d) must include:

(1) a statement from each person being added as an inventor and from each person being deleted as an inventor that the error in inventorship occurred without deceptive intention on his or her part;
(2) the fee set forth in § 1.17(I); and
(3) If an assignment has been executed by any of the original named inventors, the written consent of the assignee (see 37 CFR §3.73(b) of this chapter).

A review of the application file reveals that applicants have satisfied items (1) - (2) under 37 CFR 1.497(d) but not requirement (3).

With respect to item (1), the statements submitted on 06 May 2004 by Stephen Co and David Weinstein are sufficient because the statements state that the error in inventorship occurred without a deceptive intent.

With respect to item (2), the processing fee of $130.00 has been paid by check.

With respect to item (3), the assignee, Openwave Systems, Inc. consents to the addition of Stephen Co and David Weinstein. However, there is no copy of the executed assignment to the assignee in the file. To establish the right of Assignee to take action, applicants must submit a copy of the executed assignment or specify the reel and frame number. Note MPEP 324 and 37 CFR 3.73(b).

For the reasons above, the request under 37 CFR 1.497(d) is **DISMISSED** without prejudice.

If reconsideration on the merits of this petition is desired, a proper reply must be filed within TWO (2) MONTHS from the mail date of this decision. The proper reply is either a proper request under 37 CFR 1.497(d) overcoming the above stated defects. The failure to provide the proper reply will result in Abandonment of the application. Any reconsideration request should include a cover letter entitled "Renewed Request Under 37 CFR 1.497(d)". Extensions of time may be obtained under 37 CFR 1.136(a).

Any further correspondence with respect to this matter should be addressed to the Mail Stop PCT, Commissioner for Patents, Office of PCT Legal Administration, P.O. Box 1450, Alexandria, Virginia 22313-1450, with the contents of the letter marked to the attention of the Office of PCT Legal Administration.

Rafael Bacares
PCT Legal Examiner
PCT Legal Office

Leonard Smith
PCT Legal Examiner
PCT Legal Office

Telephone: (703) 308-6312
Facsimile: (703) 308-6459

07 JAN 2005

UNITED STATES PATENT and TRADEMARK OFFICE

COMMISSIONER FOR PATENTS
UNITED STATES PATENT AND TRADEMARK OFFICE
P.O BOX 1450
ALEXANDRIA, VA 22313-1450
www.uspto.gov

#16

FISH & RICHARDSON P.C.
3300 DAIN RAUSCHER PLAZA
MINNEAPOLIS MN 55402

In re Application of	:	DECISION ON RENEWED
Paul Edmonds	:	
Application No.: 09/889,911	:	
Int. Filing Date: 21 January 1999	:	
Priority Date: 21 January 2000	:	REQUEST UNDER
Attorney's Docket No.: 09872-002003	:	
For: UNIVERSAL INTERFACE FOR VOICE	:	
ACTIVATED ACCESS TO MULTIPLE	:	
INFORMATION PROVIDERS	:	37 CFR 1.497(d)

This is a decision on applicants' "correspondence" filed on 17 September 2004, which is being treated renewed request under 37 CFR 1.497(d).

BACKGROUND

In a decision from this Office mailed on 03 August 2004, the decision indicated that the request was dismissed because the request did not satisfy item (3) of 37 CFR 1.497(d). The assignee, Openwave Systems, Inc. had not established its ownership of the application accordance with 37 CFR 3.73.

On 17 September 2003, applicant filed the current communication, which included, *inter alia*, a copy of the chain of title of the assignment to Openwave Systems.

DISCUSSION

In regard to item (3), Openwave Systems has submitted the copies of the assignments showing that Openwave Systems is the assignee of the above application. However, a further review of the "Petition by Assignee for Addition of Inventors" reveals that the applicant has not satisfied item (3) of 37 CFR 1.497(d) since Alan Minsk, who is signing on behalf of the assignee, does not have apparent authority because his title is of Director and Patent Counsel. This title is not presumed to be an officer that has authority to sign on behalf of the organization. Note MPEP 1820.

Accordingly, applicant is deemed not to satisfy requirement (3) under 37 CFR 1.497(d).

CONCLUSION

For the reasons above, the request under 37 CFR 1.497(d) is **DISMISSED** without prejudice.

If reconsideration on the merits of this petition is desired, a proper reply must be filed within TWO (2) MONTHS from the mail date of this decision. The failure to provide the proper reply will result in Abandonment of the application. Any reconsideration request should include a cover letter entitled "Second Renewed Request Under 37 CFR 1.497(d)". Extensions of time may be obtained under 37 CFR 1.136(a).

Any further correspondence with respect to this matter should be addressed to the Mail Stop PCT, Commissioner for Patents, Office of PCT Legal Administration, P.O. Box 1450, Alexandria, Virginia 22313-1450, with the contents of the letter marked to the attention of the Office of PCT Legal Administration

Rafael Bacares
PCT Legal Examiner
PCT Legal Office

Boris Milef
PCT Legal Examiner
PCT Legal Office

Telephone: (571) 272-3276
Facsimile: (571) 273-0459

22 APR 2005

#18

UNITED STATES PATENT and TRADEMARK OFFICE

COMMISSIONER FOR PATENTS
UNITED STATES PATENT AND TRADEMARK OFFICE
P.O BOX 1450
ALEXANDRIA, VA 22313-1450
www.uspto.gov

FISH & RICHARDSON P.C.
3300 DAIN RAUSCHER PLAZA
MINNEAPOLIS MN 55402

In re Application of	:	DECISION ON RENEWED
Paul Edmonds	:	
Application No.: 09/889,911	:	REQUEST UNDER
Int. Filing Date: 21 January 1999	:	
Priority Date: 21 January 2000	:	37 CFR 1.497(d) AND
Attorney's Docket No.: 09872-002003	:	
For: UNIVERSAL INTERFACE FOR VOICE	:	PETITION
ACTIVATED ACCESS TO MULTIPLE	:	
INFORMATION PROVIDERS	:	AND 37 CFR 1.10(c)

This is a decision on applicants' "Second Renewed Request Under 37 CFR 1.497(d)" filed on 22 February 2005 and the fax transmission 20 April 2005, which is also being treated as a petition under 37 CFR 1.10(c) requesting that the executed declaration was received at the USPTO on September 30, 2003.

BACKGROUND

In a decision from this Office mailed on 07 January 2005, the decision indicated that the request was dismissed because Alan Minsk did not have apparent authority because his title is of Director and Patent Counsel. This title is not presumed to be an officer that has authority to sign on behalf of the organization. Therefore, the request did not satisfy item (3) of 37 CFR 1.497(d).

On 07 January 2005, applicant filed the current request, which includes a copy of delegation of signature authority to Mr. Minsk.

DISCUSSION

37 CFR 1.497(d):

In regard to item (3), Openwave Systems has submitted a delegation of signature authority to Mr. Minsk. This is a proper communication delegating authority to Mr. Minsk for signing the required papers for the above application. Applicant has satisfied item (3) under 37 CFR 1.497(d).

Accordingly, the requests are deemed to satisfy requirements (1), (2), and (3) under 37 CFR 1.497(d).

CONCLUSION

For the reasons above, the request under 37 CFR 1.497(d) to add Stephen Co and David Weinstin as inventors is **GRANTED.**

37 CFR 1.10(c):

37 CFR 1.10(c) provides:

Any person filing correspondence under this section that was received by the Office and delivered by the "Express Mail Post Office to Addressee" service of the USPS, who can show that there is a discrepancy between the filing date accorded by the Office to the correspondence and the date of deposit as shown by the "date-in" on the "Express Mail" mailing label or other official USPS notation, may petition the Commissioner to accord the correspondence a filing date as of the "date-in" on the "Express Mail" mailing label or other official USPS notation, provided that:

(1) The petition is filed promptly after the person becomes aware that the Office has accorded, or will accord, a filing date other than the USPS deposit date;

(2) The number of the "Express Mail" mailing label was placed on the paper(s) or fee(s) that constitute the correspondence prior to the original mailing by "Express Mail;" and

(3) The petition includes a true copy of the "Express Mail" mailing label showing the "date-in," and of any other official notation by the USPS relied upon to show the date of deposit.

A review of the application papers reveals that "Express Mail" Label No. EV 321387291 US was placed on the itemized return-postcard stamped by the USPTO with a date of 01 October 2003. However, the copy of the customer receipt of "Express Mail" Label No. EV 321387291 US filed identifies the day of deposit as "September 30," and stamped by the USPS as September 30, 2003. Accordingly, the requirements under 37 CFR 1.10(c) have been satisfied.

The date of receipt of the executed declaration for the above application is 30 September 2003, which is the date that petitioner satisfied the requirement under 35 U.S.C. 371(c)(4).

CONCLUSION

For reasons above, the petition under 37 CFR 1.10(c) is **GRANTED.**

This application is being returned to the United States Designated/Elected Office (DO/EO/US) for continued processing consistent with this decision. The 35 USC 371(c)(1), (c)(2), and (c)(4) date of this application is **30 September 2003.**

Rafael Bacares
PCT Legal Examiner
PCT Legal Office
Telephone: (571) 272-3276
Facsimile: (571) 273-0459

SPE RESPONSE FOR CERTIFICATE OF CORRECTION

Paper No.: _____

DATE : 10-13-05

TO SPE OF : ART UNIT 1723

SUBJECT : Request for Certificate of Correction on Patent No.: 09889961

A response is requested with respect to the accompanying request for a certificate of correction.

Please complete this form and return with file, within 7 days to:
Palm location **7580, Certificates of Correction Branch – South Tower – 9A22**
If response is for an IFW, **return to employee (named below) via PUBSCofC Team in MADRAS.**
With respect to the change(s) requested, correcting Office and/or Applicant's errors, should the patent read as shown in the certificate of correction (COCIN)? No new matter should be introduced, nor should the scope or meaning of the claims be changed.

Valerie Jackson

Thank You For Your Assistance

Certificates of Correction Branch
Tel. No. 703-308-9390 ext. 114

The request for issuing the above-identified correction(s) is hereby:
Note your decision on the appropriate box.

- ☒ **Approved** — **All** changes apply.
- ☐ **Approved in Part** — Specify below which changes **do not** apply.
- ☐ **Denied** — State the reasons for denial below.

Comments:

Figures are approved by the Examiner.

SPE

1723
Art Unit

PTO/SB/44 (04-05)
Approved for use through 04/30/2007. OMB 0651-0033
U.S. Patent and Trademark Office; U.S. DEPARTMENT OF COMMERCE
Under the Paperwork Reduction Act of 1995, no persons are required to respond to a collection of information unless it displays a valid OMB control number.
(Also Form PTO-1050)

UNITED STATES PATENT AND TRADEMARK OFFICE
CERTIFICATE OF CORRECTION

PATENT NO. : 6,921,482

APPLICATION NO.: 09/889,961

ISSUE DATE : 26 July 2005

INVENTOR(S) : Cheng et al.

It is certified that an error appears or errors appear in the above-identified patent and that said Letters Patent is hereby corrected as shown below:

Several drawings in the issued patent are unclear - they appear totally (or nearly totally) black.

Specifically, Figures 5, 6, 7, 9, 10, and 11 clearly require replacement, which will likely require reprinting of the patent. Accordingly, it is submitted that all of the drawings in this patent shoud be replaced.

Attached are the replacement drawings which were sent to the PCT Office in the priority application - PCT/US00/02194.

MAILING ADDRESS OF SENDER (Please do not use customer number below):

Ernest V. Linek, Banner & Witcoff, Ltd., 28 State Street, Floor 28, Boston, MA 02109-1775

Ernest V. Linek - 29,822 - 9/29/2005

This collection of information is required by 37 CFR 1.322, 1.323, and 1.324. The information is required to obtain or retain a benefit by the public which is to file (and by the USPTO to process) an application. Confidentiality is governed by 35 U.S.C. 122 and 37 CFR 1.14. This collection is estimated to take 1.0 hour to complete, including gathering, preparing, and submitting the completed application form to the USPTO. Time will vary depending upon the individual case. Any comments on the amount of time you require to complete this form and/or suggestions for reducing this burden, should be sent to the Chief Information Officer, U.S. Patent and Trademark Office, U.S. Department of Commerce, P.O. Box 1450, Alexandria, VA 22313-1450. DO NOT SEND FEES OR COMPLETED FORMS TO THIS ADDRESS. SEND TO: **Attention Certificate of Corrections Branch, Commissioner for Patents, P.O. Box 1450, Alexandria, VA 22313-1450.**

If you need assistance in completing the form, call 1-800-PTO-9199 and select option 2.

OCT 0 5 2005

UNITED STATES PATENT AND TRADEMARK OFFICE

Commissioner for Patents
United States Patent and Trademark Office
P.O. Box 1450
Alexandria, VA 22313-1450
www.uspto.gov

DEC 22 2004

HOFFMANN & BARON, LLP
6900 JERICHO TURNPIKE
SYOSSET NY 11791

In re Application of:
Rana et al.
Serial No.: 09/889,982
Filed: January 14, 2002
Attorney Docket No.: 1368-17 PCT/US

DECISION ON PETITION TO WITHDRAW THE HOLDING OF ABANDONMENT

This is in response to applicants' petition under 37 CFR. § 1.181 filed on July 30, 2004, requesting withdrawal of the holding of abandonment based on non-receipt of an Office action and to restore the application to a pending status.

A review of the file history shows that the Office mailed an Office action, setting a three month statutory time period for reply, to applicants on November 14, 2003. A notice of abandonment was mailed to applicants on June 29, 2004. The file history currently shows that a response to the Office action of November 14, 2003 was timely received on February 17, 2004. In view of this, applicants are considered to have submitted a timely reply.

Applicants' petition is **GRANTED** retroactively as the case is no longer in abandoned status.

Should there be any questions about this decision, please contact Marianne C. Seidel by letter addressed to Director, TC 1600, at the address listed above, or by telephone at 571-272-0584 or by facsimile at 703-872-9306.

Marianne C. Seidel for

Jasemine C. Chambers
Director, Technology Center 1600

UNITED STATES PATENT AND TRADEMARK OFFICE

Commissioner for Patents
United States Patent and Trademark Office
P.O. Box 1450
Alexandria, VA 22313-1450
www.uspto.gov

BASF Corporation
26701 Telegraph Road
Southfield, MI 48034-2442

COPY MAILED

FEB 14 2006

OFFICE OF PETITIONS

In re **Blum etal.** Application No. 09/890,019 Filing Date: Aug.9, 2001 (IA date 1/21/2000) Attorney Docket: IN-5510	: : : : :	RECONSIDERATION OF PATENT TERM ADJUSTMENT

This decision is in response to Applicants' REQUEST FOR RECONSIDERATION OF PATENT TERM ADJUSTMENT INDICATED IN THE NOTICE OF ALLOWANCE timely[1] filed on January 18, 2005 requesting that the Office reconsider the PTA determination in view of the Office not providing any delays under 37 CFR 1.702(a)(1).

Applicants request for PTA reconsideration is **DISMISSED.**

Applicants assert that the determination of Zero (0) days of applicants delay is not accurate. Applicant submitted a list of entry dates for filing of the action as well as the date that the Office initially replied.

Applicants' submission is not persuasive because this application is not eligible for PTA. Accordingly, the grounds of Office delay and applicant delay enumerated in 37 CFR 1.702-1.705 are not applicable to this application. Rather, the only grounds in which the applicants may receive administrative delay are enumerated in 37 CFR 1.701.[2] This application is not eligible for PTA because the international filing date of the application was filed prior to May 29, 2000.[3]

[1]Issue fee paid with/after filing of request for reconsideration of PTA..

[2]Under PTE, applications filed between June 8, 1995 and May 28, 2000, applicants not assessed any reductions against patent term but the grounds in which applicants may receive additional term are limited .

[3]The International filing date of this application, PCT/EP00/1/21/2000.

After the mailing of this decision, the Office will forward this application to the Office of Patent Publications for a prompt issuance of the application into a patent.

The Office has assesed the required $200.00 petition fee. No additional fees are required by the Office in determining this request.

Any questions relating to this decision should be directed to Kery A. Fries, Office of Patent Legal Administration, at 571-272-7757.

Kery A Fr

Kery A. Fries
Senior Legal Advisor
Office of Patent Legal Administration
Office of Deputy Commissioner for
Patent Examination Policy

UNITED STATES PATENT AND TRADEMARK OFFICE

UNITED STATES DEPARTMENT OF COMMERCE
United States Patent and Trademark Office
Address: COMMISSIONER FOR PATENTS
P.O. Box 1450
Alexandria, Virginia 22313-1450
www.uspto.gov

APPLICATION NO.	FILING DATE	FIRST NAMED INVENTOR	ATTORNEY DOCKET NO.	CONFIRMATION NO.
09/890,021	10/10/2001	Hikaru Fukuyama	2001-0990A	6250

513 7590 11/05/2007
WENDEROTH, LIND & PONACK, L.L.P.
2033 K STREET N. W.
SUITE 800
WASHINGTON, DC 20006-1021

EXAMINER
THEISEN, MARY LYNN F

ART UNIT	PAPER NUMBER
1732	

MAIL DATE	DELIVERY MODE
11/05/2007	PAPER

Please find below and/or attached an Office communication concerning this application or proceeding.

The time period for reply, if any, is set in the attached communication.

UNITED STATES PATENT AND TRADEMARK OFFICE

COMMISSIONER FOR PATENTS
UNITED STATES PATENT AND TRADEMARK OFFICE
P.O. BOX 1450
ALEXANDRIA, VA 22313-1450
www.uspto.gov

In re Patent No. FUKUYAMA ET AL.	:	
Issue Date: September 7, 2004	:	**DECISION DISMISSING**
Appl. No.: 09/890,021	:	**PETITION**
Filed: October 10, 2001	:	*37 CFR 1.324*
For: COMPRESSING MALLET WITH COATING TREATMENT	:	

This is a decision on the petition filed June 27, 2006 to correct inventorship under 37 CFR 1.324.

The petition is dismissed.

A petition to correct inventorship as provided by 37 CFR 1.324 requires (1) a statement from each person who is being added as an inventor that the inventorship error occurred without any deceptive intention on their part, (2) a statement from the current named inventors (including any "inventor" being deleted) who have not submitted a statement as per "(1)" either agreeing to the change of inventorship or stating that they have no disagreement in regard to the requested change, (3) a statement from all assignees of the parties submitting a statement under "(1)" and "(2)" agreeing to the change of inventorship in the patent; such statement must comply with the requirements of 37 CFR 3.73(b); and (4) the fee set forth in 37 CFR 1.20(b). This petition lacks item (3) because the statement provided by the assignee fails to comply with the requirements of 37 CFR 3.73(b).

Christina Johnson
Supervisory Patent Examiner
Art Unit 1791
Patent Examining Group 1700

WENDEROTH, LIND & PONACK, L.L.P.
2033 K STREET N. W.
SUITE 800
WASHINGTON, DC 20006-1021

19 AUG 2002

UNITED STATES PATENT AND TRADEMARK OFFICE

COMMISSIONER FOR PATENTS
UNITED STATES PATENT AND TRADEMARK OFFICE
WASHINGTON, D.C. 20231
www.uspto.gov

mailed 8/19/2002

Gregory A. Nelson
Akerman, Senterfitt & Eidson, P.A.
P.O. Box 3188
West Palm Beach, FL 33402-3188

In re Application of	:	
VO-DINH	:	
U.S. Application No.: 09/890,047	:	DECISION
PCT No.: PCT/US00/02051	:	
Int. Filing Date: 25 January 2000	:	
Priority Date: 25 January 2000	:	
For: ADVANCED MULTIFUNCTIONAL	:	
MULTISPECTRAL BIOSENSOR	:	
DEVICES AND METHODS OF USE	:	

This decision is in response to applicant's "Comments Regarding Refiling and Request for Refund" filed 29 April 2002 in the United States Patent and Trademark Office (USPTO). The correspondence is being treated as a petition under 37 CFR 1.8. No petition fee is required.

BACKGROUND

On 25 January 2000, applicant filed international application PCT/US00/02051. A Demand for international preliminary examination, in which the United States was elected, was not filed prior to the expiration of nineteen months from the priority date. Accordingly, the twenty-month period for paying the basic national fee in the United States expired at midnight on 25 September 2001.

On 25 July 2001, applicant filed a transmittal letter for entry into the national stage in the United States which was accompanied by the requisite basic national fee as required by 35 U.S.C. 371(c)(1). An oath or declaration as required by 35 U.S.C. 371 (c)(4) was not filed.

On 27 September 2001, applicant was mailed a NOTIFICATION OF MISSING REQUIREMENTS UNDER 35 U.S.C. 371 (Form PCT/DO/EO/905) informing applicant of the need to provide a signed oath or declaration of the inventors, in compliance with 37 CFR 1.497(a) and (b), identifying the application by the International application number and international filing date. Applicant had prepaid the surcharge for providing an oath or declaration later than twenty months from the priority date.

On 29 April 2002, applicant filed the papers considered herein; namely a combined declaration and power of attorney; a change of correspondence address; a petition for a four-month extension of time; authorization to deduct the four-month extension of time payment; copies of previously filed papers and a copy of a facsimile transmission report for 20 November 2001.

DISCUSSION

37 CFR 1.8(b) states:

> In the event that correspondence is considered timely filed by being mailed or transmitted in accordance with paragraph (a) of this section, but not received in the Patent and Trademark Office, and the application is held to be abandoned or the proceeding is dismissed, terminated, or decided with prejudice the correspondence will be considered timely filed if the party who forwarded the correspondence:
>
> (1) Informs the Office of the previous mailing or transmission of the correspondence promptly after becoming aware that the Office has no evidence of receipt of the correspondence;
>
> (2) Supplies an additional copy of the previously mailed or transmitted correspondence and certificate; and
>
> (3) Includes a statement which attests on a personal knowledge basis or to the satisfaction of the Commissioner to the previous timely mailing or transmission. If the correspondence was sent by facsimile transmission, a copy of the sending unit's report confirming transmission may be used to support this statement.

As to item (1), applicant has provided a signed statement that counsel was first informed that the previous transmission was not received by the USPTO on 26 April 2002 and filed the present petition on 29 April 2002, thus satisfying item (1) above;

Regarding item (2), applicant has provided an additional copy of the papers originally transmitted;

As to item (3), counsel has attested to personal knowledge regarding the facsimile transmission of an executed combined declaration and power of attorney on 20 November 2001 and included a copy of the transmission report confirming a successful transmission.

Applicant has thus satisfied all three items above and it is proper to grant the petition at this time. The four-month extension of time petition fee of $1,440.00 will be refunded to Deposit Account No.: 50-0951. Further, a review of the application file reveals that all of the requirements of 35 U.S.C. 371 for entry into the national stage in the United States have been satisfied.

CONCLUSION

Applicant's petition under 37 CFR 1.8 and request for refund is **GRANTED**.

As discussed above, $1,440.00 will be refunded to Deposit Account No.: 50-0951.

This application has an international application filing date of 25 January 2000 and will be given a date of **29 April 2002** under 35 U.S.C. 371.

This application is being returned to the DO/EO/US for further processing in accordance with this decision.

Richard Cole
Legal Examiner
PCT Legal Office

Derek A. Putonen
Petitions Attorney
PCT Legal Office
Tel: (703) 305-0130
Fax: (703) 308-6459

UNITED STATES PATENT AND TRADEMARK OFFICE

COMMISSIONER FOR PATENTS
UNITED STATES PATENT AND TRADEMARK OFFICE
WASHINGTON, D.C. 20231
www.uspto.gov

13 SEP 2002

Gregory M. Stone, Esq.
Whiteford, Taylor & Preston, LLP
Seven Saint Paul Street
Baltimore, MD 21202-1626

In re Application of:	:	
McCormack et al.	:	
Application No.: 09/890,126	:	DECISION
PCT No.: PCT/IE00/00012	:	
Int. Filing Date: 28 January 2000	:	UNDER
Priority Date: 29 January 1999	:	
Atty. Docket No.: None	:	37 CFR 1.47
For: Electrical Energy Meter	:	

This is in response to the "Petition Under 37 CFR § 1.47(a)" filed on 20 February 2002.

BACKGROUND

This international application was filed on 28 January 2000, and claimed an earliest priority date of 29 January 1999. A copy of the published international application was transmitted to the USPTO on 03 August 2000. A Demand electing the United States was filed on 18 August 2000, which was prior to the elapse of 19 months from the priority date. Accordingly, the thirty month period for paying the basic national fee in the United States expired as of midnight on 29 July 2001.

On 27 July 2001, applicants filed the basic national fee accompanied by, *inter alia*, a Transmittal Letter.

On 07 September 2001, a Notification of Missing Requirements was transmitted to applicants, requiring the submission of an oath or declaration of the inventors and a surcharge under 37 CFR 1.492(e).

Applicants filed the instant papers and surcharge under 37 CFR 1.492(e) on 20 February 2002.

On 11 March 2002, a Notification of Acceptance was mailed to applicants, indicating that this application was entitled to a 35 U.S.C. 371 date of 20 February 2002.

DISCUSSION

A petition under 37 CFR 1.47(a) must be accompanied by (1) the fee under 37 CFR

1.17(h), (2) factual proof that the missing joint inventor refuses to execute the application or cannot be reached after diligent effort, (3) a statement of the last known address of the missing inventor, and (4) an oath or declaration by each 37 CFR 1.47(a) applicant on his or her own behalf and on behalf of the non-signing joint inventor. Petitioner has satisfied requirements (1), (2), (3) and (4).

Regarding requirement (1), the petition fee is being charged to counsel's Deposit Account No. 50-1479, as authorized by the papers filed on 20 February 2002. Thus, requirement (1) has been satisfied.

Regarding requirement (2), review of the record reveals that non-signing joint inventor Michael McCormack has refused to execute a declaration after being presented with the declaration and a copy of international application. As such, requirement (2) has been satisfied.

Regarding requirement (3), the petition includes a statement of Mr. McCormack's last known address.

Regarding requirement (4), the declaration is acceptable for purposes of compliance with 35 U.S.C. 371. However, the declaration includes a claim of priority under 35 U.S.C. 120 to application number 09/377,108. This priority claim appears to be improper in that the instant application (09/890,126) shares no inventor(s) in common with the previous application (09/377,108); thus, the declaration may not be acceptable under 37 CFR 1.63.

CONCLUSION

The petition is **GRANTED**.

The $130.00 petition fee is being charged to counsel's Deposit Account No.50-1479.

The Notification of Acceptance mailed on 11 March 2002 was inappropriate and is hereby **VACATED**.

This application is being forwarded to the National Stage Processing Branch for further processing. The date of the application under 35 U.S.C. 371 is **20 February 2002**.

Richard Cole
PCT Legal Examiner
PCT Legal Office

George M. Dombroske
PCT Legal Examiner
PCT Legal Office
Tel: (703) 308-6721
Fax: (703) 308-6459

UNITED STATES PATENT AND TRADEMARK OFFICE

COMMISSIONER FOR PATENTS
UNITED STATES PATENT AND TRADEMARK OFFICE
P.O. BOX 1450
ALEXANDRIA, VA 22313-1450
www.uspto.gov

MAY 18 2005

In re Application of :
Louis Lagler *et al* :
Application No. 09/890,154 : DECISION ON PETITION
Filed: October 23, 2001 :
Attorney Docket No. P56559PCT :

This is a decision on the petitions filed on January 2, 2004 and April 27, 2004, by which petitioners seek to have the examiner's requirement, as promulgated in both the Office action mailed on April 13, 2003 and the Office action mailed on April 13, 2004, that Figure 1 be labeled as "Prior Art" withdrawn and for such other and further relief as justice may require. The petition is being considered pursuant to 37 CFR 1.181, and no fee is required for the petition.

The petition is dismissed.

A review of the record shows that :

1. A first Office action mailed on April 23, 2003 contained a requirement that Figure 1 be labeled as Prior Art" as follows. The requirement stated that "Figure 1 should be designated by a legend such as –prior Art– because only that which is old is illustrated. See MPEP § 608.02(g)." See page 2, paragraph 2 of the action.

2. The requirement, as quoted above, was again set forth in the Office action mailed on April 13, 2004.

3. Petitioners seasonably traversed the April 23, 2003 requirement, seasonably filed the first petition, and has both continued to traverse the requirement and filed a second petitioner.

4. As originally filed, the specification states at page 5, lines 5-6, "Figure 1 schematically shows a closure according to the prior art; ..."

5. As originally filed, the specification states at page 5, line 20 through page 6, line 30 "Figure 1 shows a schematic side view of a closed injection moulded closure 1, as known from the prior art. A lower closure part and a movable upper closure part 3 can be seen. The upper closure part 3 is connected to the lower closure part 2 by means of a conventional snap-on hinge The snap-on hinge 4 consists of a main hinge connection 5 and two tension bands and (because of the direction of view, only the tension band 6.1 is visible here) which each connect the lower closure part 2 to the upper closure part 3 and as a rule are arranged by the side of the main hinge connection Instead of tension bands 6.2, there are also other known elements, such as toggle levers, etc., which are not used in practice in closed injection moulded closures owing to various disadvantages. The main hinge connection 5 forms a direct hinge connection with only one hinge axis between the lower closure part 2 and the upper closure part 3. This hinge axis of the main hinge connection 5 is parallel to the direction of view in the representation shown here. Owing to the main hinge connection 5 having a hinge axis, all parts rotate relative to one another along circular paths. In order to be able to produce the closure 1 in the closed position of the upper closure part 3, the main hinge connection 5 and tension bands 6.1, 6.2 and in particular their connections to the closure parts 2 and 3 must be arranged in such a way that they are accessible in the injection mould (not shown) from the inside of the closure (arrow 10) and from the outside of the closure (arrow 11). Particularly the main hinge is difficult to form. Owing to these facts, the function (snap-on effect) and the arrangement (open position) of the upper closure part in the case of the closures known from the prior art are very restricted and inadequate. A typical open position of the upper closure part 3 is represented by an upper closure part 7. The open position of the tension bands 6 is represented by tension bands 8.1, 8.2 (only one can be seen). Owing to the unavoidable main hinge connection 5 in this closure concept, the closure 1 shown here has a small opening angle of about 80° and a poor snap-on effect."

Petitioners argue that nothing in petitioners' specification states that Figure 1 constitutes "Prior Art" as that term is defined by 35 USC § 102. Petitioners' refer to their argument in response to the April 23, 2003 Office letter that "[F]igure 1 illustrates Applicant's analysis of a structure found in the prior art; Figure 1 itself is not prior art, but is a

new analysis that was not previously available to the public. Consequently, labeling Figure l as 'prior art' would be inaccurate and misleading, because Figure 1 serves to comply with the requirements of 37 CFR 1 .83(a) and (b)." Petitioners further argue that " ... identifying Figure 1 as prior art would denigrate both Applicant's contribution to the art, and Applicant's recognition of the flaws intrinsic in the prior art and erect a bar to patentability contrary to 35 USC § l03(a), which expressly states that patentability should not be negatived by the manner in which the invention was made by Applicant.". Petitioners also argue that " ... the Examiner's justitication is flawed. The term Prior Art was defined by the Congress of these United States in 35 USC § 103(a) by reference to the several sections of 35 USC. § 102. Nothing in 35 U.S.C. § 102 states that the fact that a drawing is *old* makes that drawing Prior Art. The fact that Applicant illustrated deficiencies in a prior art structure, which deficiencies Applicant alone both recognized and addressed, does not make Applicant's illustration of those deficiencies prior art, even when those deficiencies that are illustrated are found in a structure that is itself prior art under one, or more, sections of 35 U.S.C. j102. Consequently, there is no basis for the Examiner's requirement and withdrawal of the Examiner's requirement is necessary." (Emphasis in the original.) Petitioners also argue in the January 4, 2004 petition that Figure 1 is not believed to constitute "Prior Art" because there is no showing that Figure 1 was known to anyone other than petitioners in this country or patented or published in this country or a foreign country.

Finally, petitioners have cited petition decisions promulgated by three different Technology Center Directors in which an examiner's requirement to label drawing figures as "Prior Art" was held to be improper. The newest of those decisions was promulgated in 1999.

MPEP § 608.02(g) **Illustration of Prior Art** states:

> Figures showing the prior art are usually unnecessary and should be canceled. *Ex parte Elliot*, 1904 C.D. 103, 103 O.G. 1337 (Comm'r Pat. 1904). However, where needed to understand applicant's invention, they may be retained if designated by a legend such as "Prior Art."
>
> If the prior art figure is not labelled, form paragraph 6.36.01 may be used.

MPEP § 608.02(g) as quoted above appears in Revision 2, May 2004 of the Manual of Patent Exmaining Procedure, but the sole change to that section is the inclusion therein of the text of the mentioned "form paragraph", the language of which is the language employed by the examiner in both of the actions complained of. The quoted language from MPEP § 608.02(g) is, therefore, not newer than Revision 1, February 2003, and so was in effect when the examiner promulgated both Office actions complained of.

Initially, it must be noted here that in the decisions of Director Smith and Director Goldberg that have been cited by petitioners, there is language addressing the issue of their jurisdiction. In those decisions, the deciding officials were careful to point out that the issue of whether an applicant has stated that something is prior art, per In re Nomiya, 184 USPQ 607 (CCPA), presents an appealable issue that may not be reviewed by petition. However, in those decisions, the issue was whether a statement that something is "conventional" equates to a statement that the something is "prior art." That issue simply does not exist in this record; rather, the record shows clear and unequivocal statements by petitioners that certain subject matter is "prior art", and that such subject matter is illustrated in Figure 1 (albeit, the illustration is stated as being a schematic illustration). Moverover, no rejection based upon Figure 1 as being "prior art" is in the record. Therefore, the question of whether or not the examiner, on the record of this application, acted properly or improperly in requiring that Figure 1 be labeled as "Prior Art" raises a purely procedural matter, and is properly presented by petition. See 37 CFR 1.181. Accordingly, the undersigned has jurisdiction to render a decision on the petition.

Turning next to the petition decisions relied upon by petitioner, and leaving aside the issue of whether the practice in effect when the examiner promulgated the actions complained of was the same as, or different than, the procedure in effect when the cited decisions were promulgated, the decisions appear to be wholly inapplicable to the facts in the instant application. Each of those decisions turned on the fact that as disclosed in the application under consideration, certain subject matter was stated in the specification to be "conventional." Apparently, neither application contained any express statement that a portion of the disclosed subject matter

was considered by the applicant to be "prior art." In the instant application, the specification is replete with references to subject matter being "in the prior art", and specifically states that "Figure 1 schematically shows a closure according to the prior art ... ." The word "conventional", and the issue of whether subject matter that is described as being "conventional" does, or does not, also enjoy status as "prior art", is not an issue on the record in this application. Therefore, the prior decisions relied upon by petitioner do not compel a conclusion that the examiner's requirement in this application was clearly erroneous, or an arbitrary or capricious action amounting to an abuse of discretion.

With respect to the practice established in MPEP § 608.02(g), it appears from the plain language of that section that **if** Figure 1 does illustrate subject matter described by petitioners as being prior art, **and** Figure 1 is needed to understand petitioners' invention, **then** it may be retained in the application if labelled appropriately. MPEP § 608.02(g) states that one such appropriate label is "Prior Art." Therefore, the question of the propriety of the examiner's purely procedural action in requiring that Figure 1 be labelled as "Prior Art" appears to turn on whether or not, per petitioners' disclosure, Figure 1 illustrates subject matter that petitioners have stated to be prior art, and whether or not Figure 1 is needed to understand petitioners' invention. If both conditions are met, then the examiner's action in requiring that Figure 1 be labelled as "Prior Art" would not constitute clear error or an arbitrary or capricious action amounting to an abuse of discretion, precisely **because** Figure 1 illustrates subject matter that petitioners have stated to be prior art **and** the examiner has found that Figure 1 is needed to understand petitioners' invention. (Note that petitioner has nowhere on the record argued that Figure 1 is not needed for an understanding of petitioners' invention.) That's all that MPEP § 608.02(g) requires. If, on the other hand, Figure 1 does not illustrate subject matter stated by petitioners to be prior art, then the examiner's action was clearly erroneous, or an arbitrary or capricious action amounting to an abuse of discretion.

A review of the application, and of petitioners' arguments presented in the record and in the petitions, is convincing that the examiner's action in requiring that Figure 1 be labelled "Prior Art" was, as a matter of Office procedure, neither clearly erroneous nor an arbitrary or capricious action amounting to an abuse of discretion. In that regard, petitioners' arguments to the effect that nothing in petitioners' specification states that Figure 1 is prior art, and that Figure 1 is merely petitioners' analysis of subject matter that shows the prior art, but is not itself prior art, are not supported by any evidence in the record. The record is devoid of any evidentiary showing that would distinguish between the subject matter described in the written specification as being prior art and the illustration appearing in Figure 1.

What the present record does show is that the specification, as filed, clearly and unequivocally states that certain subject matter **is** prior art to petitioners. Examples of such statements are quoted above. The present record also shows that the specification, as filed, clearly and unequivocally states that **a closure according to the prior art is shown in Figure 1**. Again, the quotation from the specification appears above. It appears, therefore, that at least on the present record, the label "Prior Art" that the examiner has required to be placed on Figure 1 would simply mean that in accordance with petitioners' own specification, Figure 1 illustrates, by way of a drawing, subject matter described in the written specification by language, which subject matter petitioners have stated to be prior art. It is the subject matter that constitutes "prior art", and whether that subject matter is accurately described by written words or is accurately portrayed by illustration in a drawing, is immaterial to the status of that subject matter as being prior art, at least insofar as the current state of the record is concerned.

Thus, petitioners' arguments seem to miss the point of the examiner's requirement. On the current record, all the examiner has done is to take petitioners' at their word, to wit, **that the subject matter that is illustrated in Figure 1 is subject matter that petitioners' specification elsewhere describes, using written language, as being prior art to petitioners**. What is generally meant when a drawing figure is labelled as being "Prior Art" **is that the drawing figure illustrates subject matter that is prior art, not that the figure *per se*, taken by itself as a graphical representation done in a particular style or as a result of a particular analysis, is itself *necessarily* prior art**.

Since, for the foregoing reasons. it does not appear that the examiner's requirement that petitioners label Figure 1 as "Prior Art" was clearly erroneous, or an arbitrary or capricious requirement amounting to an abuse of discretion, the requested relief will not be granted on the current record. Petitioners may file a renewed petition, without fee, provided that the renewed petition is filed within two months of the date of this decision. See 37 CFR 1.181(f). Petitioners are reminded that under 37 CFR 1.181(f), the mere filing of a petition will not serve to stay a running statutory period period for response or serve as a proper reply to an outstanding Office action.

PETITION DISMISSED.

Richard A. Bertsch

E. R. Kazenske, Director
Technology Center 3700

Robert E. Bushnell
1522 K Street NW
Suite 300
Washington, DC 20005-1202

SPE RESPONSE FOR CERTIFICATE OF CORRECTION

Paper No.: _____

DATE : ~~6/7/05~~ 7/20/06

TO SPE OF : ART UNIT 1761

SUBJECT : Request for Certificate of Correction for Appl. No.: 9/890160 Patent No.: 6805894 B1

Please respond to this request for a certificate of correction within 7 days.

Please review the requested changes/corrections as shown in the **COCIN** document(s) in the IFW application image. No new matter should be introduced, nor should the scope or meaning of the claims be changed.

Please complete the response (see below) and forward the completed response to scanning using document code **COCX**.

Virginia Tolbert
Certificates of Correction Branch

703-308-9390 ext. 113

Thank You For Your Assistance

The request for issuing the above-identified correction(s) is hereby:
Note your decision on the appropriate box.

- [x] **Approved** — **All** changes apply.
- [ ] **Approved in Part** — Specify below which changes **do not** apply.
- [ ] **Denied** — State the reasons for denial below.

Comments: _____

Glenn Calderola
Supervisory Patent Examiner
Technology Center 1700

SPE — Art Unit 1764

Staple Here Only!

UNITED STATES PATENT AND TRADEMARK OFFICE

CERTIFICATE OF CORRECTION

PATENT NO. : 6,805,894 B1
DATED : Oct. 19, 2004
INVENTOR(S) : KIMURA et al.

It is certified that error appears in the above-identified patent and that said letters patent is hereby corrected as shown below:

Column 8, lines 34-62

1. A soft candy comprising blending at least a saccharide, vegetable oil, emulsifier and fine sucrose crystals having a crystal size of less than 30 μm, wherein the compounding ratio of fine sucrose crystals to the soft candy is 1 to 30% by mass, and having initial chewing ease of 5,000-23,000 (g·s).

2. A soft candy comprising blending at least a saccharide, vegetable oil, emulsifier and fine sucrose crystals having a crystal size of less than 30 μm, wherein the compounding ratio of fine sucrose crystals to the soft candy is 1 to 30% by mass, and having teeth adherence of 100-1500 (g).

3. A soft candy comprising blending at least a saccharide, vegetable oil, emulsifier and fine sucrose crystals having a crystal size of less than 30 μm, wherein the compounding ratio of fine sucrose crystals to the soft candy is 1 to 30% by mass, having initial chewing ease of 5,000-23,000 (g·s), and having teeth adherence of 100-1500 (g).

4. A soft candy comprising blending at least a saccharide, vegetable oil, emulsifier, fine sucrose crystals having a crystal size of less than 30 μm, wherein the compounding ratio of fine sucrose crystals to the soft candy is 1 to 30% by mass, and a frappe containing a foaming protein and saccharide, and having initial chewing ease of 5,000-23,000 (g·s).

5. A soft candy comprising blending at least a saccharide, vegetable oil, emulsifier, fine sucrose crystals having a crystal size of less than 30 μm, wherein the compounding ratio of fine sucrose crystals to the soft candy is 1 to 30% by mass, and a frappe containing a foaming protein and saccharide, and having teeth adherence of 100-1500 (g).

6. A soft candy comprising blending at least a saccharide, vegetable oil, emulsifier, fine sucrose crystals having a crystal size of 30 μm or less, wherein the compounding ratio of fine sucrose crystals to the soft candy is 1 to 30% by mass, and a frappe containing a foaming protein and saccharide, having initial chewing ease of 5,000-23,000 (g·s), and having teeth adherence of 100-1500 (g).

OK
NS
3/5/07

MAILING ADDRESS OF SENDER:

Arthur R. Crawford
NIXON & VANDERHYE P.C.
901 North Glebe Road, 11th Floor
Arlington, Virginia 22201

PATENT NO. 6,805,894 B1

No. of add'
@ 50¢ per page

Form PTO 1050 (Rev. 2-93)

MAY 20 2005

954890

24 DEC 2002
UNITED STATES PATENT AND TRADEMARK OFFICE

#8

COMMISSIONER FOR PATENTS
UNITED STATES PATENT AND TRADEMARK OFFICE
WASHINGTON, D.C. 20231
www.uspto.gov

HARNESS, DICKEY & PIERCE
PO Box 828
Bloomfield Hills., MI 48303

In re Application of	:	
DASSOULAS, Stephen, C., et al.	:	COMMUNICATION
U.S. Application No.: 09/890164	:	REGARDING SUBMISSION
PCT No.: PCT/US00/01609	:	UNDER 37 CFR 1.42
International Filing Date: 24 January 2000	:	
Priority Date: 25 January 1999	:	
Attorney's Docket No.: 0275Y0312USB	:	
For: SAW BLADE FOR CUTTING FIBER CEMENT	:	

This Communication is issued in response to applicants' 01 August 2002 submission of a declaration executed on behalf of deceased inventor Michael Lindberg, treated herein as a submission under 37 CFR 1.42. No petition fee is required.

BACKGROUND

The background for this application is set forth in the previous Communication issued by this Office on 18 June 2002.

Subsequent to that Communication, on 02 July 2002, the DO/EO/US mailed a Notification Of Defective Response indicating that the declaration filed by applicants was defective in that it was not properly executed with respect to the deceased inventor.

On 01 August 2002, applicants filed the response considered herein as a submission under 37 CFR 1.42. This submission included a declaration executed on behalf of the deceased inventor by Laura Lindberg, identified as the executor of the deceased inventor's estate.

DISCUSSION

37 CFR 1.42 *When the Inventor is Dead*, states, in part:

> In case of the death of the inventor, the legal representative (executor, administrator, etc.) of the deceased inventor may make the necessary oath or declaration, and apply for and obtain the patent.

37 CFR 1.497(b)(2) states the following:

> (2) If the person making the oath or declaration or any supplemental oath or declaration is not the inventor (§§ 1.42, 1.43, or § 1.47) the oath or declaration shall state the relationship of the person to the inventor, and,

> upon information and belief, the facts which the inventor would have been required to state. If the person signing is the legal representative of a deceased inventor, the oath or declaration shall also state that the person is a legal representative and the citizenship, residence, and mailing address of the legal representative.

37 CFR 1.497(b)(2) requires that citizenship, mailing address, and residence information be provided for **both** the deceased inventor and the legal representative. The regulation expressly requires the inclusion of this information for the legal representative. As for the deceased inventor, such information is required because the legal representative must declare to all the facts which the inventor would have been required to state, and citizenship, residence and mailing address are among the facts which the inventor would have been required to set forth pursuant to 37 CFR 1.497(a) and 37 CFR 1.63.

Here, as noted above, the declaration submitted on 01 August 2002 was executed by Laura Lindberg as "executor for the estate of Michael Lindberg." The declaration therefore satisfies the requirement that it be executed by the deceased inventor's legal representative and that it expressly state the relationship of the signee to the deceased inventor.

However, the declaration does not comply with 37 CFR 1.497(b)(2), discussed above, in that it does not include citizenship, mailing address, and residence information for the deceased inventor (such information is provided for the legal representative, as also required). Because the declaration does not provide all the information required by 37 CFR 1.497(b)(2), the declaration cannot be accepted under 37 CFR 1.42.

CONCLUSION

The 01 August 2002 submission under 37 CFR 1.42 is **REFUSED** without prejudice.

Applicants have **TWO (2) MONTHS** from the mailing date of this communication to submit a proper response under 37 CFR 1.42 and 37 CFR 1.497. Failure to provide a proper and timely response will result in abandonment.

A proper response must include an acceptable declaration properly executed under 37 CFR 1.42, that is, a declaration executed by the legal representative for the deceased inventor which indicates the executing persons relationship to the deceased inventor (i.e., executor) and which includes all required information, including the citizenship, post office address, and residence information for both the deceased inventor and the legal representative.

Any further correspondence with respect to this matter should be addressed to the Assistant Commissioner for Patents, Box PCT, Washington, D.C. 20231, with the contents of the letter marked to the attention of the PCT Legal Office.

Richard M. Ross
PCT Petitions Attorney
PCT Legal Office
Telephone: (703) 308-6155
Facsimile: (703) 308-6459

30 SEP 2003

A10

UNITED STATES PATENT AND TRADEMARK OFFICE

COMMISSIONER FOR PATENTS
UNITED STATES PATENT AND TRADEMARK OFFICE
WASHINGTON, D.C. 20231
www.uspto.gov

HARNESS, DICKEY & PIERCE
PO Box 828
Bloomfield Hills., MI 48303

In re Application of	:	
DASSOULAS, Stephen, C., et al.	:	DECISION REGARDING
U.S. Application No.: 09/890,164	:	RENEWED SUBMISSION
PCT No.: PCT/US00/01609	:	UNDER 37 CFR 1.42
International Filing Date: 24 January 2000	:	
Priority Date: 25 January 1999	:	
Attorney's Docket No.: 0275Y0312USB	:	
For: SAW BLADE FOR CUTTING FIBER CEMENT	:	

This decision is issued in response to the "Response" filed by applicants on 24 February 2003. No petition fee is required.

BACKGROUND

The background of this application has been set forth in previous communications mailed by this Office on 18 June 2002 and 24 December 2002.

The 18 June 2002 communication informed applicants that the 22 March 2002 submission of a partially executed declaration was not a complete response to the Notification Of Missing Requirements mailed 12 September 2001.

The 24 December 2002 communication refused applicants' submission of a declaration executed on behalf of deceased inventor Michael Lindberg under 37 CFR 1.42. Specifically, the declaration was found not to comply with 37 CFR 1.497 in that it did not include the citizenship, mailing address, and residence information for the deceased inventor.

On 24 February 2003, applicants filed the "Response" to the previous communication considered herein. The Response correctly notes that the residence and mailing address for the deceased inventor were listed in the Application Data Sheet filed with the application materials. Accordingly, the defect in the filed declaration is reduced to the fact that the declaration executed by the representative of the deceased inventor's estate does not set forth the citizenship of the deceased inventor. Applicants argue that this is not required, asserting that "as long as each inventor, his residence, mailing address and citizenship are 'identified' in at least one of the submitted declarations or in an application data sheet," the declaration is sufficient.

The argument set forth in applicants' 24 February 2003 Response has been considered but is not considered persuasive, as discussed below.

Moreover, a further review has determined that applicants' 22 March 2002 submission in response to the Notification Of Missing Requirements was not a bona fide response in that applicants were clearly aware at the time that the submission was not a complete response to the Notification Of Missing Requirements. Accordingly, this application is **ABANDONED** for failure to file a bona fide response to the Notification Of Missing Requirements, as discussed below.

DISCUSSION

A. Applicants' Response To The 24 December 2002 Communication

Applicants argument here is based on a purported distinction in the regulations regarding "stated" or "identified" facts. However, this argument ignores the language of the controlling statute which these regulations supplement, 35 U.S.C. 115, which expressly states that the applicant "shall state of what country he is a citizen." The listing of the citizenship of the deceased inventor in the application data sheet does not satisfy this requirement (citizenship is not among the items referred to in 37 CFR 1.63(c) as being required unless "supplied on an application data sheet"). Nor is the listing of a country of citizenship for the deceased inventor in declarations signed by the other inventors sufficient, since, in executing these declarations, the inventors are attesting to their own personal information, not that of the other inventors.[1] What is required is that the declaration executed by the person signing on behalf of the deceased inventor set forth the citizenship of the deceased inventor, as the inventor would be required to state under 35 U.S.C. 115.

Accordingly, applicants have still not filed a new declaration in compliance with 37 CFR 1.42 and 37 CFR 1.497, that is, a declaration executed by the representative of the deceased inventor and setting forth the citizenship of both the inventor and the legal representative.

B. Abandonment Based On The Failure To File A Timely Bona Fide Response To The Notification Of Missing Requirements

37 CFR 1.135(c) states the following (bold emphasis added):

> When reply by the applicant is a *bona fide* attempt to advance the application to final action, and is, substantially a complete reply to the non-final Office action, but consideration of some matter or compliance with some requirements has been **inadvertently** omitted, applicant may be given a new time period for reply under 37 CFR 1.134 to supply the omission.

---

[1] Note the first two lines of the declaration, which state: As a below named inventor, I hereby declare that [m]y residence, mailing address and citizenship are as stated below next to my name."

A review of applicants' incomplete 22 March 2002 submission in response to the reveals that the failure to include a full response was not inadvertent. Applicants specifically acknowledged that they had not provided the signature of the deceased inventor's legal representative, stating that such would be provided "shortly."[2]

Because applicants' failure to file a complete response to the Notification Of Missing Requirements was not "inadvertent," the 22 March 2002 submission cannot be treated as a bona fide response under 37 CFR 1.135, and granting applicants a new time period to respond was therefore improper. See MPEP § 714.03, which states:

> The practice set forth in 37 CFR 1.135(c) does not apply where there has been a deliberate omission of some necessary part of a complete reply; rather, 37 CFR 1.135(c) is applicable only when the missing matter or lack of compliance is considered by the examiner as being "inadvertently omitted." For example, if an election of species has been required and applicant does not make an election because he or she believes the requirement to be improper, the amendment on its face is not a "*bona fide* attempt to advance the application to final action.

The Communication mailed by this Office on 18 June 2002 (which treated the 22 March 2002 submission as a bona fide response) and the "Notification Of Defective Response" mailed 02 July 2002 (which granted applicants a new response time for filing a proper declaration) are therefore appropriately vacated.

The application is abandoned for failure to file an acceptable declaration in response to the Notification Of Missing Requirements mailed 12 September 2001.

CONCLUSION

Based on the above, the present application is **ABANDONED**.

The Communication mailed by this Office on 18 June 2002 and the "Notification Of Defective Response" mailed 02 July 2002 are hereby **VACATED**.

As noted above, the declaration filed by applicants on 01 August 2002 remains defective, as discussed above and in the Communication mailed on 24 December 2002, for failure to include the citizenship of both the legal representative and the deceased inventor.

---

[2] It is noted that applicants did not submit a declaration executed by the legal representative of the deceased inventor until 01 August 2002.

Any further correspondence with respect to this matter should be directed to Mail Stop PCT, Commissioner for Patents, Office of PCT Legal Administration, P.O. Box 1450, Alexandria, Virginia 22313-1450, with the contents of the letter marked to the attention of the Office of PCT Legal Administration.

Boris Milef
PCT Legal Examiner
PCT Legal Office

Richard M. Ross
PCT Petitions Attorney
PCT Legal Office
Telephone: (703) 308-6155
Facsimile: (703) 308-6459

RMR/BM:rmr

31 MAR 2004

#12

UNITED STATES PATENT AND TRADEMARK OFFICE

COMMISSIONER FOR PATENTS
UNITED STATES PATENT AND TRADEMARK OFFICE
WASHINGTON, D.C. 20231
www.uspto.gov

HARNESS, DICKEY & PIERCE
PO Box 828
Bloomfield Hills., MI 48303

In re Application of	:	
DASSOULAS, Stephen, C., et al.	:	DECISION ON PETITION
U.S. Application No.: 09/890,164	:	FOR REVIVAL UNDER 37
PCT No.: PCT/US00/01609	:	CFR 1.137(b) AND
International Filing Date: 24 January 2000	:	SUBMISSION UNDER
Priority Date: 25 January 1999	:	37 CFR 1.42
Attorney's Docket No.: 0275Y0312USB	:	
For: SAW BLADE FOR CUTTING FIBER CEMENT	:	

The petition to revive under 37 CFR 1.137(b) filed 22 March 2004 in the above-captioned application is hereby **GRANTED** as follows:

Applicant's statement that "the entire delay in filing the required reply from the due date for the required reply until the filing of a grantable petition under 37 CFR 1.137(b) was unintentional" meets the requirements of 37 CFR 1.137(b)(3).

The "required reply" was a proper response to the Notification Of Missing Requirements, that is, an acceptable declaration in compliance with 37 CFR 1.497. Applicants had previously filed acceptable declarations executed by the surviving inventors, and the present petition is accompanied by a declaration executed on behalf of the deceased inventor (Michael LINDBERG) by the executrix of the deceased inventor's estate. This declaration is acceptable under 37 CFR 1.42 and 37 CFR 1.497. Accordingly, applicants have submitted the required reply.

The requirements of 37 CFR 1.137(b) have been satisfied. Therefore, the request to revive the application is granted as to the national stage in the United States of America.

The request for status under 37 CFR 1.42 is also **GRANTED**.

This application is being returned to the National Stage Processing Division of the Office of PCT Operations for further processing in accordance with this decision. The date under 35 U.S.C. 371(c)(1), (c)(2), and (c)(4) is 22 March 2004.

Richard M. Ross
PCT Petitions Attorney
PCT Legal Office
Telephone: (703) 308-6155
Facsimile: (703) 308-6459

UNITED STATES PATENT AND TRADEMARK OFFICE

UNITED STATES DEPARTMENT OF COMMERCE
United States Patent and Trademark Office
Address: COMMISSIONER FOR PATENTS
P.O. Box 1450
Alexandria, Virginia 22313-1450
www.uspto.gov

MARTIN D. MOYNIHAN d/b/a PRTSI, INC.
P.O. BOX 16446
ARLINGTON, VA 22215

Mail Date: 04/23/2010

Applicant	: Oren Globerman	: DECISION ON REQUEST FOR
Patent Number	: 7621950	: RECALCULATION of PATENT
Issue Date	: 11/24/2009	: TERM ADJUSTMENT IN VIEW
Appliction No	: 09/890,172	: OF WYETH
Filed	: 07/25/2001	:
		:

The Patentee's Request for Recalculation is **DISMISSED.**

This Request is deemed ineligible for consideration for one or more of the following reasons:

(A). The patent for which PTA recalculation is requested is either a design or reissue application or is a reexamination proceeding;

(B). The patent for which PTA recalculation is requested resulted from a utility or plant application filed under 35 USC 111(a) before May 29, 2000 and no CPA filed in the application on/after May 29, 2000;

(C). The patent for which PTA recalculation is requested resulted from an international application in which the international filing date was before May 29, 2000 and no CPA filed in the application on/after May 29, 2000;

(D). The patent for which PTA recalculation is requested issued on/after March 2, 2010;

(E). The Request for Recalculation was filed more than 180 days after the grant date of the patent and the request was not filed within two months of a dismissal of a request for reconsideration of the of the patent term under 37 CFR 1.705(d);

(F). The Request for Recalculation is not solely limited to USPTO pre-Wyeth interpretation of 35 U.S.C. 154(b)(2)(A);

or

(G). A civil action was filed pursuant to 35 U.S.C. 154(b)(4)(A)concerning the same patent at issue in this request.

Patentee may file a reply to this decision dismissing the Request for Recalculation. Patentee must file such reply within one month or thirty days, whichever is longer, of the mail date of the decision dismissing the Request for Recalculation. No fee is required if patentee is asserting in the reply that the dismissal for ineligibility is improper.

Patentee should use document code PET.OP if electronically filing a reply to this dismissal. If the USPTO finds that the request was improperly deemed ineligible, the USPTO will mail applicant a recalculation determination.

Patentee should be aware that in order to preserve the right to review in the United States District Court for the District of Columbia of the USPTO patent term adjustment determination, patentee must ensure that he or she also take the steps required under 35 U.S.C. 154(b)(4)(A). Nothing in the request for recalculation should be construed as providing an alternative time frame for commencing a civil action under 35 U.S.C. 154 (b)(4)(A).

Any questions concerning this decision should be directed to the Office of Patent Legal Administration at 571-272-7702.

NOV 1 6 2001

UNITED STATES PATENT AND TRADEMARK OFFICE

COMMISSIONER FOR PATENTS
UNITED STATES PATENT AND TRADEMARK OFFICE
WASHINGTON, D.C. 20231
www.uspto.gov

Kevin G. Rooney
Wood, Herron & Evans, LLP
2700 Carew Tower
441 Vine Street
Cincinnati, Ohio 45202

In re Application of WILLIAMSON, et al. Application No.: 09/890,177 PCT No.: PCT/US98/20478 Int. Filing Date: 05 October 1998 Priority Date: None Attorney Docket No.: BIOP-02 For: APPARATUS AND METHOD FOR HARVESTING AND HANDLING TISSUE SAMPLES FOR BIOPSY ANALYSIS	DECISION ON PETITION UNDER 37 CFR 1.137(b)

This decision is in response to applicant's "Petition For Revival of an International Application For Patent Designating The U.S. Abandoned Unintentionally Under 37 CFR 1.137(b)" filed 27 July 2001 in the United States Patent and Trademark Office (USPTO).

BACKGROUND

On 05 October 1998, applicant filed international application PCT/US98/20478. A Demand for international preliminary examination, in which the United States was elected, was filed on 04 May 1999, prior to the expiration of nineteen months from the priority date. Accordingly, the thirty-month period for paying the basic national fee in the United States expired at midnight on 05 April 2001.

On 05 April 2001, the application became abandoned for failure to pay the basic national fee for a U.S. national stage entry application.

On 27 July 2001, applicant filed the present petition accompanied by: a "Transmittal Letter to the United States Designated/Elected Office (DO/EO/US) Concerning a Filing Under 35 U.S.C. 371;" a check for $4098.00 as payment for the basic national fee and other fees, a check for $1240.00 as payment of the petition fee under 37 CFR 1.17(m), a declaration and power of attorney signed by the inventors and a change of power of attorney and/or address letter.

DISCUSSION

A petition under 37 CFR 1.137(b) requesting that the application be revived on the grounds of unintentional abandonment must be accompanied by (1) the required reply, (2) the petition fee required by law, (3) a statement that the, "entire delay in filing the required reply from the due date for the reply until the filing of a grantable petition pursuant to this paragraph was unintentional" and (4) any terminal disclaimer and fee pursuant to 37 CFR 1.137(c) (where required).

With regard to Item (1), the proper response was the payment of the basic national fee. Applicant has provided this payment along with the present petition.

As to Item (2), applicant paid the $1240.00 petition fee.

With regard to Item (3), applicant's statement that, "the entire delay in filing the required reply from the due date for the required reply until the filing of a grantable petition under 37 CFR 1.137(b) was unintentional" satisfies the requirement of 37 CFR 1.137(b)(3).

As to Item (4), the terminal disclaimer is not required since this application was filed after 08 June 1995.

A review of the application file reveals that, with the filing of the present petition and accompanying papers, a proper response has been submitted and all of the requirements of 37 CFR 1.137(b) for revival have been satisfied and revival is therefore appropriate.

It is noted that the first inventor is listed as Warren N. WILLIAMSON in the published international application and Warren P. WILLIAMSON IV on the executed declaration filed 27 July 2001. In addition, the second inventor is listed as Stephen WHITLACH in the published international application and Stephen WHITLATCH on the executed declaration. These discrepancies raise the question as to whether the discrepancies are the result of a typographical errors or name changes. In order to continue processing of the application applicant is required to provide an explanation for the discrepancies. If the discrepancies are the result of name changes, a petition under 37 CFR 1.182 is required. See MPEP 605.04(c) for further requirements.

CONCLUSION

For the reasons stated above, the petition for revival is **GRANTED**.

Applicant is hereby afforded **TWO MONTHS** from the mail date of this decision to furnish the proper reply as indicated above. Failure to file the reply within the time period provided will result in abandonment. Extensions of time may be obtained under 37 CFR 1.136(a).

Any further correspondence with respect to this matter should be addressed to the Assistant Commissioner for Patents, Box PCT, Washington, D.C. 20231, with the contents of the letter marked to the attention to the PCT Legal Office

Boris Milef
Legal Examiner
PCT Legal Office

Derek A. Putonen
Petitions Attorney
PCT Legal Office
Tel: (703) 305-0130
Fax: (703) 308-6459

MAR 0 8 2002

UNITED STATES PATENT AND TRADEMARK OFFICE

COMMISSIONER FOR PATENTS
UNITED STATES PATENT AND TRADEMARK OFFICE
WASHINGTON, D.C. 20231
www.uspto.gov

Kevin G. Rooney
Wood, Herron & Evans, LLP
2700 Carew Tower
441 Vine Street
Cincinnati, Ohio 45202

In re Application of	:	
WILLIAMSON, et al.	:	
Application No.: 09/890,177	:	
PCT No.: PCT/US98/20478	:	COMMUNICATION
Int. Filing Date: 05 October 1998	:	
Attorney Docket No.: BIOP-02	:	
For: APPARATUS AND METHOD FOR HARVESTING AND HANDLING TISSUE SAMPLES FOR BIOPSY ANALYSIS	:	

This communication is in response to applicant's "Response to Decision on Petition" filed 02 January 2002 in the United States Patent and Trademark Office (USPTO).

BACKGROUND

On 16 November 2001, applicant was mailed a decision granting applicant's petition for revival of the above-identified application pursuant to 37 CFR 1.137(b). Applicant was advised that the first inventor was listed as Warren N. WILLIAMSON in the published international application and Warren P. WILLIAMSON IV on the executed declaration filed 27 July 2001 and that the second inventor was listed as Stephen WHITLACH in the published international application and Stephen WHITLATCH on the executed declaration. Applicant was afforded two months from the mail date of the decision to provide an explanation for the discrepancies thus allowing continued processing of the application.

On 02 January 2002, applicant filed the present response.

DISCUSSION

Applicant states, "Please note that these discrepancies are typographical errors in the international application papers and the names should be spelled as set forth in the executed declaration filed July 27,2001." As indicated in Section 201.03 of the Manual of Patent Examining Procedure, where a typographical or transliteration error in the spelling of an inventor's name is discovered, a petition is not required. Accordingly, applicant's explanation of the differences in the spelling of the inventors' names is accepted and noted for the record.

This application is being forwarded to United States Designated/Elected Office

(DO/EO/US) for further processing with the name of the relevant inventors spelled as Warren P. WILLIAMSON IV and Stephen WHITLATCH and according a date of **27 July 2001** under 35 U.S.C. 371.

Richard Cole
Legal Examiner
PCT Legal Office

Derek A. Putonen
Petitions Attorney
PCT Legal Office
Tel: (703) 305-0130
Fax: (703) 308-6459

APR 1 6 20

UNITED STATES PATENT AND TRADEMARK OFFICE

Commissioner for Patents
United States Patent and Trademark Office
Washington, D.C. 20231
www.uspto.gov

Charles J. Kulas
Townsend and Townsend and Crew LLP
Two Embarcadero Center, 8th Floor
San Francisco, CA 94111

In re Application of MEDVINSKY et al	:	
U.S. Application No.: 09/890,178	:	
Int. Application No.: PCT/US00/02317	:	
Int. Filing Date: 28 January 2000	:	DECISION
Priority Date: 29 January 1999	:	
Attorney Docket No.: 018926-0003400US	:	
For: SELF-GENERATION OF CERTIFICATES USING A SECURE MICROPROCESSOR IN A DEVICE FOR TRANSFERRING DIGITAL INFORMATION	:	

This is in response to the "Petition to Change the First Name of Inventor Under 37 CFR 1.182" filed 04 April 2002.

BACKGROUND

On 28 January 2000, applicants filed international application PCT/US00/02317, which claimed priority of an earlier United States application filed 29 January 1999. A Demand for international preliminary examination, in which the United States was elected, was filed on 22 August 2000, prior to the expiration of nineteen months from the priority date. Accordingly, the thirty-month period for paying the basic national fee in the United States expired at midnight on 30 July 2001 (29 July 2001 was a Sunday).

On 26 July 2001, applicants filed national stage papers in the United States Designated/Elected Office (DO/EO/US). The submission was accompanied by, *inter alia*, the basic national fee required by 35 U.S.C. 371(c)(1).

On 06 September 2001, the DO/EO/US mailed a Notification of Missing Requirements Under 35 U.S.C. 371 (Form PCT/DO/EO/905), which indicated that an oath or declaration in compliance with 37 CFR 1.497 must be filed along with a surcharge under 37 CFR 1.492(e) for providing the oath or declaration later than thirty (30) months from the priority date.

On 03 January 2002, applicants filed an executed declaration.

On 25 January 2002, this Office mailed a communication which identified a discrepancy in the first inventor's name.

On 04 April 2002, applicants filed the present petition.

DISCUSSION

A review of the application file reveals that the given name of the first inventor is listed in the international application as "Sasha" while the given name is listed in the declaration as "Alexander". The petition states that the inventor's nickname "Sasha" was inadvertently used in the international application instead of the inventor's given name "Alexander". The petition is accompanied by the requisite petition fee of $130.00 as well as statements from the inventor and the person having firsthand knowledge of the error. These statements set forth the specific circumstances as to how and when the error was made and set forth that the mistake was an inadvertent error without deceptive intent.

CONCLUSION

For the reasons above, the petition under 37 CFR 1.182 is GRANTED.

The application has an International Filing Date of 28 January 2000 and a date under 35 U.S.C. 371 of 03 January 2002.

The application will be forwarded to the United States Designated/Elected Office (DO/EO/US) for processing in accordance with this decision

Bryan Tung
PCT Legal Examiner
PCT Legal Office

Telephone: 703-308-6614
Facsimile: 703-308-6459

OCT 1 5 2001

UNITED STATES PATENT AND TRADEMARK OFFICE

COMMISSIONER FOR PATENTS
UNITED STATES PATENT AND TRADEMARK OFFICE
WASHINGTON, D.C. 20231
www.uspto.gov

DON W BULSON
RENNER, OTTO, BOISSELLE & SKLAR
1621 EUCLID AVENUE, 19TH FLOOR
CLEVELAND, OH 44115

In re Application of CHOY et al. Serial No.: 09/890,193 PCT No.: PCT/GB99/02413 Int. Filing Date: 26 July 1999 Priority Date: 27 July 1998 Attorney's Docket No.: FRYHP0102US For: THERMAL BARRIER COATING WITH THERMO-LUMINESCENT INDICATOR MATERIAL EMBEDDED THEREIN	DECISION ON PETITION UNDER 37 CFR 1.137(b)

The petition to revive under 37 CFR 1.137(b) filed 26 July 2001 in the above-captioned application is hereby **GRANTED** as follows:

Applicants' statement that the "any delay in submitting these papers was unintentional" has been interpreted as meaning that "entire delay in filing the required reply from the due date for the reply until the filing of a grantable petition under 37 CFR 1.137(b) was unintentional" as required by 37 CFR 1.137(b)(3) at the time of filing this petition. If this is an incorrect interpretation in view of the rules, petitioner is required to promptly notify this office.

A review of the application file reveals that the basic national fee of $860 has been paid. The required petition fee of $1240 has also been paid. Thus, the requirements of 37 CFR 1.137(b) have been satisfied. Therefore, the request to revive the application abandoned under 35 U.S.C. 371(d) is granted as to the National stage in the United States of America.

This application is being forwarded to the National Stage Processing Division of the Office of PCT Operations for continued processing. The 35 U.S.C. 371 date is 26 July 2001.

Cynthia M. Kratz

Cynthia M. Kratz
Attorney Advisor
PCT Legal Office

Telephone: (703) 306-5467

UNITED STATES PATENT AND TRADEMARK OFFICE

30 APR 2002

COMMISSIONER FOR PATENTS
UNITED STATES PATENT AND TRADEMARK OFFICE
WASHINGTON, D.C. 20231
www.uspto.gov

Lawrence S. Perry
Fitzpatrick, Cella, Harper & Scinto
30 Rockefeller Plaza
New York, NY 10112

In re Application of	:	
OHTA, et al.	:	
U.S. Application No.: 09/890,217	:	DECISION ON PETITION
PCT No.: PCT/JP00/08391	:	
Int. Filing Date: 29 November 2000	:	UNDER 37 CFR 1.182
Priority Date: 29 November 1999	:	
Attorney's Docket No.: 2139.24	:	
For: METHOD OF ENHANCING SALTY TASTE, SALTY TASTE ENHANCER, SALTY TASTE SEASONING AGENT AND SALTY TASTE-ENHANCED FOODS	:	

This decision is in response to applicant's petition under 37 CFR 1.182 filed 11 February 2002 in the United States Patent and Trademark Office (USPTO). Applicant has provided the $130.00 petition fee.

BACKGROUND

On 21 November 2001, applicant was mailed a communication informing applicant that a declaration filed on 26 July 2001 did not comply with 37 CFR 1.497 (a)-(b). Specifically, the fourth listed inventor was listed and executed as "Aki MORITA" whereas the International Application lists the fourth inventor as "Aki NAKAGAWA." Applicant was afforded two months to provide either a declaration executed with the name which appears on the international application, "Aki NAKAGAWA" or in the alternative, a petition under 37 CFR 1.182 requesting that applicant's name be changed to "Aki MORITA."

On 11 February 2002, applicant filed the present petition under 37 CFR 1.182 accompanied by a declaration executed by Aki MORITA. The papers were certified as having been deposited for mailing on 22 January 2002. As 21 January 2002 was a federal holiday, the papers are considered to be timely filed.

DISCUSSION

The present petition is accompanied by a declaration setting forth the procedure whereby the change of name was effected; namely by marriage. The declaration is executed by Mrs. MORITA using her current, married name. As such, it is appropriate to grant applicant's petition at this time.

CONCLUSION

The petition under 37 CFR 1.182 to change the inventor's name from Aki NAKAGAWA to Aki MORITA is GRANTED.

The application has an international filing date of 29 November 2000 under 35 U.S.C. 363 and a date of **11 February 2002** under 35 U.S.C. 371(c).

This application is being forwarded to the National Stage Processing Branch of the International Division for continued national stage processing.

Leonard Smith
Legal Examiner
PCT Legal Office

Derek A. Putonen
Petitions Attorney
PCT Legal Office
Tel: (703) 305-0130
Fax: (703) 308-6459

27 JUN 2002

UNITED STATES PATENT AND TRADEMARK OFFICE

COMMISSIONER FOR PATENTS
UNITED STATES PATENT AND TRADEMARK OFFICE
WASHINGTON, D.C. 20231
www.uspto.gov

Lawrence S. Perry
Fitzpatrick, Cella, Harper & Scinto
30 Rockefeller Plaza
New York, NY 10112

In re Application of	:	
OHTA, et al.	:	
U.S. Application No.: 09/890,217	:	SUPPLEMENTAL DECISION
PCT No.: PCT/JP00/08391	:	
Int. Filing Date: 29 November 2000	:	PETITION UNDER
Priority Date: 29 November 1999	:	
Attorney's Docket No.: 2139.24	:	37 CFR 1.182
For: METHOD OF ENHANCING SALTY TASTE, SALTY TASTE ENHANCER, SALTY TASTE SEASONING AGENT AND SALTY TASTE-ENHANCED FOODS	:	

On 30 April 2002, applicant was mailed a decision granting applicant's petition under 37 CFR 1.182 to change the inventor's name from Aki NAKAGAWA to Aki MORITA. The application was afforded a date of **11 February 2002** under 35 U.S.C 371(c) and returned to the United States Designated/Elected Office (DO/EO/US) for processing and mailing of a Notification of Acceptance (Form PCT/DO/EO/903). The date afforded should have been the date the executed declaration was filed, 26 July 2001. Therefore, the decision mailed 30 April 2002 affording a date of 11 February 2002 under 35 U.S.C 371(c) is hereby **VACATED**.

On 09 May 2002, applicant was mailed a Notification of Acceptance (Form PCT/DO/EO/903) indicating a 35 U.S.C 371(c) date of 11 February 2002.

Applicant's renewed petition under 37 CFR 1.182 is **GRANTED** for the reasons detailed in the 30 April 2002 decision.

In addition, the Notification of Acceptance (Form PCT/DO/EO/903) mailed 09 May 2002 is hereby **VACATED**.

The application has an international filing date of 29 November 2000 under 35 U.S.C. 363 and a date of **26 July 2001** under 35 U.S.C. 371(c).

This application is being forwarded to the National Stage Processing Branch of the International Division for continued national stage processing including the preparation and mailing of a new Notification of Acceptance (Form PCT/DO/EO/903).

Leonard Smith
Legal Examiner
PCT Legal Office

Derek A. Putonen
Petitions Attorney
PCT Legal Office
Tel: (703) 305-0130
Fax: (703) 308-6459

03 SEP 2002

UNITED STATES PATENT AND TRADEMARK OFFICE

COMMISSIONER FOR PATENTS
UNITED STATES PATENT AND TRADEMARK OFFICE
WASHINGTON, D.C. 20231
www.uspto.gov

Kevin R. Spivak
MORRISON & FOERSTER
2000 Pennsylvania Avenue
Washington, D.C. 20006-1888

In re Application of
PLUNDRICH, Winfried *et al*
Application No.: 09/890,235
PCT No.: PCT/DE00/00170
Int. Filing Date: 20 January 2000
Priority Date: 28 January 1999
Attorney's Docket No.: 449122007600
For: COMPOSITE OF TWO PARTS FORMED USING A GLUE

DECISION ON PETITION TO WITHDRAW HOLDING OF ABANDONMENT

The decision is in response to applicants' "PETITION TO WITHDRAW HOLDING OF ABANDONMENT" filed on 09 July 2002. No fee is required.

BACKGROUND

On 30 July 2001, applicants filed a transmittal letter for entry into the national stage in the United States under 35 U.S.C. 371 which was accompanied by, *inter alia*, a purported English translation of the international application.

On 05 September 2001, the United States Designated/Elected Office (DO/EO/US) mailed a NOTIFICATION OF MISSING REQUIREMENTS UNDER 35 U.S.C. 371 (PCT/DO/EO/905) and a NOTICE OF DEFECTIVE TRANSLATION (PCT/DO/EO/913) indicating that the translation was defective because the number of claims in the international application and the translation were not the same and that the Office required a translation of the original claims as filed.

On 07 January 2002, applicants filed a response which included an English translation of the International Preliminary Examination Report ("IPER") together with a two-month extension request with an accompanying $400.00 check and authorization to charge any additional fees as required to Deposit Account No. 03-1952.

On 09 April 2002, the DO/EO/US mailed a NOTIFICATION OF DEFECTIVE RESPONSE (Form PCT/DO/EO/916) indicating that the translation of the international application was defective because the number of claims in the international application and the number of claims in the translation was not the same. This Notification required a response within one-month from the date of mailing thereof or within the time remaining for response set forth in the Form PCT/DO/EO/905. No further extensions of time were available.

On 08 May 2002, applicants submitted a document titled "COMMUNICATION" along with copies of the documents previously filed 07 January 2002.

On 10 June 2002, the DO/EO/US mailed a NOTIFICATION OF ABANDONMENT (Form PCT/DO/EO/909) indicating that the above-captioned application was abandoned for failure to reply to the Form PCT/DO/EO/905 mailed 05 September 2001 within the time period set therein.

On 09 July 2002, applicants filed the instant petition requesting that the holding of abandonment be withdrawn.

DISCUSSION

Applicants claim that the response filed 07 January 2002 contained a translation of the IPER which explains the canceling of claims in the PCT application. Therefore, the English translation originally submitted with the national stage papers on 30 July 2001 was not defective.

However, 35 U.S.C. 371 (c)(2) requires the applicant to file a copy of the international application, and a translation into the English language of the international application, if it was filed in another language. In addition, 37 CFR 1.495(c)(1) requires a translation of the international application, as filed, into the English language, if it was originally filed in another language. Moreover, 37 CFR 1.495(h) states that if "any required translation of the international application as filed and/or the oath or declaration are not timely filed, an international application will become abandoned as to the United States upon expiration of the time period set pursuant to paragraph (c) of this section."

Accordingly, the translation submitted on 30 July 2001 was defective because it was not a translation of the international application as originally filed. The translation did not include the same number of claims as the original. A translation of the international application as originally filed has not yet been submitted.

CONCLUSION

For the reasons above, the petition under 37 CFR 1.181 requesting that the holding of abandonment be withdrawn is **DISMISSED**.

The application remains **ABANDONED**.

Applicants may wish to consider filing a petition under 37 CFR 1.137(a) or (b) requesting that the application be revived. An acceptable English language translation of the international application as filed and a petition fee is required to be filed with the

petition to revive.

Any such petition to revive or request for reconsideration on the merits of this petition must be filed within **TWO (2) MONTHS** from the mail date of this decision. Any reconsideration request should include a cover letter entitled "Renewed Petition Under 37 CFR 1.181." No petition fee is required. Extensions of time may be obtained under 37 CFR 1.136(a).

Any further correspondence with respect to this matter should be addressed to the Assistant Commissioner for Patents, Box PCT, Washington, D.C. 20231, with the contents of the letter marked to the attention of the PCT Legal Office.

Richard Cole
PCT Legal Examiner
PCT Legal Office

James Thomson
Attorney Advisor
PCT Legal Office

Tel.: (703) 308-6457

25 NOV 2002
UNITED STATES PATENT AND TRADEMARK OFFICE

COMMISSIONER FOR PATENTS
UNITED STATES PATENT AND TRADEMARK OFFICE
WASHINGTON, D.C. 20231
www.uspto.gov

Kevin R. Spivak
MORRISON & FOERSTER
2000 Pennsylvania Avenue
Washington, D.C. 20006-1888

In re Application of
PLUNDRICH, Winfried *et al*
Application No.: 09/890,235
PCT No.: PCT/DE00/00170
Int. Filing Date: 20 January 2000
Priority Date: 28 January 1999
Attorney's Docket No.: 449122007600
For: COMPOSITE OF TWO PARTS FORMED USING A GLUE

DECISION ON RENEWED PETITION TO WITHDRAW HOLDING OF ABANDONMENT AND PETITION TO REVIVE IN THE ALTERNATIVE

The decision is in response to applicants' "Renewed Petition to Withdraw Holding of Abandonment and Petition to Revive in the Alternative" ("Ren.Pet.") filed on 17 October 2002.

BACKGROUND

On 03 September 2002, a decision dismissing applicants' petition to withdraw the holding of abandonment was mailed. The decision was dismissed because a translation of the international application as originally filed had not yet been provided.

On 17 October 2002, applicants filed the instant renewed petition requesting that the holding of abandonment be withdrawn, or in the alternative to revive the above-captioned application pursuant to 37 CFR 1.137(b).

DISCUSSION

Petition to Withdraw Holding of Abandonment

Applicants claim that the Notification of Defective Response mailed 09 April 2002 did not adequately explain that a copy of the international application as filed was required as an adequate response because "the Notification indicated that a new translation must be furnished in compliance with 35 USC 371." Ren.Pet. at ¶ 4. Applicants contend that the statute does not specify an English translation of the original international application. Id. Moreover, applicants claim that "[i]t was not until Applicants received the Decision on Petition that the U.S. Patent and Trademark Office first identified 37 CFR 1.495(c)(1) as a reason for not having adequately responded to the Notification of Defective Translation." Id. at ¶ 6. Applicants argue that since they had no knowledge that a copy of the international application as filed was required to

respond to the Notification of Defective Response, instead, they "responded by supplying a translation of the IPER explaining the amendments made during the PCT phase of prosecution." Id. at 7.

This argument has been carefully considered but has been rejected.

The Notification of Defective Response mailed 09 April 2002 specifically refers to 37 CFR 1.495 on the first sentence followed by a list of items submitted by applicants to the Office pursuant to that regulation. Applicants should have known to refer to 37 CFR 1.495 if there were any questions regarding any items required still outstanding. In addition, the statute specifically expressly requests an English translation of the international application, an English translation of any amendments, and an English translation of any annexes to the IPER. *See* 35 U.S.C. 371(c)(2) & (3) & (5). If this requirement was ambiguous, applicants should have referred to the rules which expand and clarify the requirements outlined in the statute.

Petition to Revive Under 37 CFR 1.137(b)

A petition under 37 CFR 1.137(b) requesting to revive an application on the grounds of unintentional delay must be accompanied by (1) a proper reply, (2) the petition fee required by law, (3) a statement that the "entire delay in filing the required reply from the due date for the reply to the filing of a grantable petition pursuant to this paragraph was unintentional," and (4) any terminal disclaimer and fee required pursuant to 37 CFR 1.137(c).

In this case, the proper reply required by item (1) above is to submit a translation of the international application as originally filed. Applicants have submitted this translation with the instant petition. Thus item (1) is complete. The appropriate petition fee of $1,280 has been charged from Deposit Account No. 03-1952 as authorized. Therefore, item (2) is complete. Applicants state that "the entire delay in filing the required reply from the due date for the required reply until the filing of a grantable petition under 37 C.F.R. § 1.137(b) was unintentional" as required by item (3). No terminal disclaimer is required in this case. Therefore, all of the requirements of 37 CFR 1.137(b) are complete.

CONCLUSION

For the reasons above, the renewed petition under 37 CFR 1.181 requesting that the holding of abandonment be withdrawn is **DISMISSED**.

Nevertheless, the petition to revive under 37 CFR 1.137(b) requested in the alternative is **GRANTED**.

Applicants have completed the requirements for acceptance under 35 U.S.C. 371(c). The application has an international filing date of 20 January 2000, under 35 U.S.C. 363, and a 35 U.S.C. 371 date of **17 October 2002**.

This application is being forwarded to the National Stage Processing Division of the Office of PCT Operations for continued processing.

Leonard Smith
PCT Legal Examiner
PCT Legal Office

James Thomson
Attorney Advisor
PCT Legal Office

Tel.: (703) 308-6457

SPE RESPONSE FOR CERTIFICATE OF CORRECTION

Paper No.:20070530

DATE : May 30, 2007

TO SPE OF : ART UNIT 1775

SUBJECT : Request for Certificate of Correction on Patent No.: 6,783,683

A response is requested with respect to the accompanying request for a certificate of correction.

Please complete this form and return with file, within **7** days to:
Certificates of Correction Branch - PK 3-910
Palm location **7590** - Tel. No. 305-8201

With respect to the change(s) requested, correcting Office and/or Applicant's errors, should the patent read as shown in the certificate of correction? No new matter should be introduced, nor should the scope or meaning of the claims be changed.

Thank You For Your Assistance **Certificates of Correction Branch**

The request for issuing the above-identified correction(s) is hereby:
Note your decision on the appropriate box.

☒ **Approved** **All** changes apply.

☐ **Approved in Part** Specify below which changes **do not** apply.

☐ **Denied** State the reasons for denial below.

Comments:

SPE: Jennifer McNeil **Art Unit** 1775

UNITED STATES PATENT AND TRADEMARK OFFICE

Commissioner for Patents
United States Patent and Trademark Office
P.O. Box 1450
Alexandria, VA 22313-1450
www.uspto.gov

ROSENBERG KLEIN & LEE
3458 ELLICOTT CENTER DRIVE, SUITE 101
ELLICOTT CITY, MD 21043

COPY MAILED

JUN 1 4 2005

OFFICE OF PETITIONS

ON PETITION

In re Application of	:	
Eun Seong Lee	:	
Application No. 09/890,253	:	
Filed: August 6, 2001	:	
Attorney Docket No. MR2685-91	:	

This is a decision on the petition under 37 CFR 1.137(b), filed May 4, 2005, to revive the above-identified application.

The petition is **GRANTED**.

The above-identified application became abandoned for failure to reply in a timely manner to the non-final Office action mailed August 11, 2004, which set a shortened statutory period for reply of three (3) months. No extension of time under the provisions of 37 CFR 1.136(a) were obtained. Accordingly, the above-identified application became abandoned on November 12, 2004.

Telephone inquiries concerning this decision should be directed to Irvin Dingle at (571) 272-3210.

This matter is being referred to Technology Center AU 2173 for further processing.

Irvin Dingle
Petitions Examiner
Office of Petitions
Office of the Deputy Commissioner
for Patent Examination Policy

10 APR 2003

UNITED STATES PATENT AND TRADEMARK OFFICE

COMMISSIONER FOR PATENTS
UNITED STATES PATENT AND TRADEMARK OFFICE
WASHINGTON, D.C. 20231
www.uspto.gov

R. Craig Tucker
Eli Lilly Company
Patent Division
P.O. Box 6288
Indianapolis, Indiana 46206-6288

In re Application of	:	
BRINER et al.	:	
Application No.: 09/890,311	:	DECISION ON PETITION
PCT No.: PCT/US00/01342	:	UNDER 37 CFR 1.181
Int. Filing Date: 19 January 2000	:	
Priority Date: 27 January 1999	:	
Attorney Docket No.: X-11594	:	
For: AMINOALKYLBENZOFURANS AS SEROTONIN (5-HT(2C)) AG ONISTS	:	

This is a decision on applicants' "PETITION TO REVIVE UNDER 37 CFR 1.137(a)" which is being treated as a Petition to Withdraw a Holding of Abandonment under 37 CFR 1.181, filed in the Patent and Trademark Office (PTO) on 02 December 2002. No petition fee is due.

BACKGROUND

On 19 January 2000, applicants filed international application no. PCT/US00/01342 which claimed a priority date of 27 January 1999. A Demand was filed with the International Preliminary Examination Authority prior to the 19th month from the earliest claimed priority date. As a result, the deadline for payment of the basic national fee was to expire 30 months from the priority date, or at midnight on 27 July 2001.

On 26 July 2001, applicants filed a transmittal letter for entry into the national stage in the United States which was accompanied by, *inter alia*,: the basic national fee; a copy of the international application; and a preliminary amendment.

On 10 September 2001, the United States Designated/Elected Office (DO/EO/US) mailed a NOTIFICATION OF MISSING REQUIREMENT UNDER 35 U.S.C. 371 (Form PCT/DO/EO/905) indicating that an oath or declaration executed by the inventor and the $130.00 surcharge for filing after the thirty-month period was required. The notification set a TWO(2) MONTH period for response.

On 15 November 2002, the United States Designated/Elected Office (DO/EO/US) mailed a NOTIFICATION OF ABANDONMENT (Form PCT/DO/EO/909) indicating that the application was abandoned for failure to file a response to the Notification of Missing Requirements mailed 10 September 2001 within the time period set therein.

On 02 December 2002, applicants filed an executed declaration and the present petition. Applicants state in the present petition, "[a]pplicants received a Notification of Abandonment, stating that the cause for abandonment as a failure to respond to a Notification of Missing Requirements, purportedly mailed 10 September 2001. Applicants declare that no such Notice of Missing Requirements was received in Applicants' offices . . . ," therefore, petitioner's statements will be treated as a petition to withdraw holding of abandonment under 37 CFR 1.181.

DISCUSSION

With regards to applicants' request that the holding of abandonment be withdrawn, a proper showing in order to establish that papers were not received as set forth in the Official Gazette at 1156 OG 53 must include the following: (1) a statement by the practitioner that the Office action was not received by the practitioner; (2) a statement attesting that a search of the file jacket and docket records indicates that the Office action was not received; and (3) a copy of the docket record where the non-received Office action would have been entered had it been received (the docket record must also be referenced in practitioner's statement).

Concerning item (2) above, applicants have not provided a statement attesting that a search of the file jacket and docket records indicates that the papers were not received.

With regard to item (3) above, applicants have not provided copies of the docket record where the notification mailed 10 September 2001 would have been entered had it been received or referenced such copies in the statement by practitioner. Specifically, applicant must provide a copy of counsel's docket records for 10 November 2002 (ie, the date on which the response was due) showing all applications for which a response was due on that date.

Thus, applicants have not provided the proper showing necessary to withdraw the holding of abandonment and the petition may not be properly granted.

CONCLUSION

The petition under 37 CFR 1.181 is **DISMISSED** without prejudice and the application remains **ABANDONED**.

Deposit Account No. 05-0840 has been charged a $130.00 surcharge fee under 37 CFR 492(e) for supplying an oath or declaration later than 30 months from the earliest claimed priority date.

If reconsideration on the merits of this petition is desired, an appropriate response to this decision must be filed within **TWO (2) MONTHS** from the mail date of this decision. Any reconsideration request should include a cover letter entitled "Renewed Petition Under 37 CFR 1.181." Extensions of time may be obtained under 37 CFR 1.136(a).

Any further correspondence with respect to this matter should be addressed to the Assistant Commissioner for Patents, Box PCT, Washington, D.C. 20231, with the contents of the letter marked to the attention of the PCT Legal Office.

Applicant is advised that, effective May 1, 2003, the Office is changing its correspondence address. Any further correspondence with respect to this matter deposited with the United States Postal Service on or after May 1, 2003 should be addressed to the Mail Stop PCT, Commissioner for Patents, Office of PCT Legal Administration, P.O. Box 1450, Alexandria, Virginia 22313-1450, with the contents of the letter marked to the attention of the Office of PCT Legal Administration.

Anthony Smith

Anthony Smith
Attorney-Advisor
Office of PCT Legal Administration
Tel.: 703-308-6314
Fax: 703-308-6459

UNITED STATES PATENT AND TRADEMARK OFFICE

COMMISSIONER FOR PATENTS
UNITED STATES PATENT AND TRADEMARK OFFICE
P.O. BOX 1450
ALEXANDRIA, VA 22313-1450
www.uspto.gov

2 9 AUG 2003

R. Craig Tucker
Eli Lilly Company
Patent Division
P.O. Box 6288
Indianapolis, Indiana 46206-6288

In re Application of	:	
BRINER et al.	:	
Application No.: 09/890,311	:	DECISION ON PETITION
PCT No.: PCT/US00/01342	:	UNDER 37 CFR 1.181
Int. Filing Date: 19 January 2000	:	
Priority Date: 27 January 1999	:	
Attorney Docket No.: X-11594	:	
For: AMINOALKYLBENZOFURANS AS SEROTONIN (5-HT(2C)) AG ONISTS	:	

This is a decision on applicants' "Renewed Petition to Withdraw Holding of Abandonment under 37 CFR 1.181" filed in the Patent and Trademark Office (PTO) on 14 August 2003. No petition fee is due.

BACKGROUND

On 19 January 2000, applicants filed international application no. PCT/US00/01342 which claimed a priority date of 27 January 1999. A Demand was filed with the International Preliminary Examination Authority prior to the 19th month from the earliest claimed priority date. As a result, the deadline for payment of the basic national fee was to expire 30 months from the priority date, or at midnight on 27 July 2001.

On 26 July 2001, applicants filed a transmittal letter for entry into the national stage in the United States which was accompanied by, *inter alia*,: the basic national fee; a copy of the international application; and a preliminary amendment.

On 10 September 2001, the United States Designated/Elected Office (DO/EO/US) mailed a Notification of Missing Requirement under 35 U.S.C. 371 (Form PCT/DO/EO/905) indicating that an oath or declaration executed by the inventor and the $130.00 surcharge for filing after the thirty-month period was required.

On 15 November 2002, the United States Designated/Elected Office (DO/EO/US) mailed a Notification of Abandonment (Form PCT/DO/EO/909) indicating that the application was abandoned for failure to file a response to the Notification of Missing Requirements mailed 10 September 2001 within the time period set therein.

On 02 December 2002, applicants filed an executed declaration and a petition under 37 CFR 1.137(a). Applicants stated in the petition, "[a]pplicants received a Notification of

Abandonment, stating that the cause for abandonment as a failure to respond to a Notification of Missing Requirements, purportedly mailed 10 September 2001. Applicants declare that no such Notice of Missing Requirements was received in Applicants' offices . .," therefore, petitioner's statements were treated as a petition to withdraw holding of abandonment under 37 CFR 1.181. The petition was dismissed in a Decision dated 10 April 2003.

On 14 August 2003, applicants filed the present Renewed Petition to Withdraw Holding of Abandonment under 37 CFR 1.181.

DISCUSSION

With regards to applicants' request that the holding of abandonment be withdrawn, a proper showing in order to establish that papers were not received as set forth in the Official Gazette at 1156 OG 53 must include the following: (1) a statement by the practitioner that the Office action was not received by the practitioner; (2) a statement attesting that a search of the file jacket and docket records indicates that the Office action was not received; and (3) a copy of the docket record where the non-received Office action would have been entered had it been received (the docket record must also be referenced in practitioner's statement). The 10 April 2003 decision indicated that applicants satisfied item (1) above.

Concerning item (2) above, applicants have provided a statement attesting that a search of the file jacket and docket records indicates that the notification was not received.

As to Item (3), applicants have submitted a copy of the docket records for 10 November 2001, indicating all applications for which a response was due on said date. Therefore, since applicants have satisfied Items (1), (2), and (3) above, the request may be properly granted.

CONCLUSION

For the reasons above, the petition under 37 CFR 1.181 is **GRANTED**. The holding of Abandonment is withdrawn.

The application has an international filing date of 19 January 2000 under 35 U.S.C. 363 and a 35 U.S.C. 371(c) date of **02 December 2002**.

This application is being returned to the United States/Designated Elected Office for processing in accordance with this decision.

Anthony Smith

Anthony Smith
Attorney-Advisor
Office of PCT Legal Administration
Tel.: 703-308-6314
Fax: 703-308-6459

UNITED STATES PATENT AND TRADEMARK OFFICE

UNDER SECRETARY OF COMMERCE FOR INTELLECTUAL PROPERTY AND
DIRECTOR OF THE UNITED STATES PATENT AND TRADEMARK OFFICE
WASHINGTON, DC 20231
www.uspto.gov

MAY 22 2003

William H. Dippert
Reed Smith LLP
599 Fifth Avenue, 29th Floor
New York, NY 10022

Paper No. 10

In re Application of Oren Globerman Serial No. : 09/890,318 Filed : July 25, 2001 For : Expandable Element Delivery System	: DECISION ON PETITION : TO WITHDRAW : HOLDING OF : ABANDONMENT :

This is a decision on petitioner's request filed via facsimile transmission February 14, 2003, to review the holding of abandonment mailed October 7, 2002, for failure to pay the Issue Fee as required in the Notice of Allowance and Fee(s) Due mailed May 29, 2002. The basis for the request is that applicant did not receive the communication mailed May 29, 2002. There is no fee required for this petition.

In order to overcome the presumption of delivery of an Office action, a practitioner must submit the following: (1) a statement from the practitioner stating that the Office action was not received by practitioner; (2) a statement attesting to the fact that a search of the file jacket and docket record indicates that the Office action was not received; and (3) a copy of the docket record where the non-received Office action would have been entered had it been received and docketed. See 1156 OG 53. The request filed February 14, 2003 includes all the above elements. The request is therefore GRANTED.

Upon the mailing of this decision, the application will be forwarded to the Legal Instruments Examiner for the remailing of the Office action of May 29, 2002.

Summary: Holding of Abandonment Withdrawn.

John E. Kittle, Director
Groups 3730 and 3760
Phone: (703) 308-0873

ak/5/19/03

UNITED STATES PATENT AND TRADEMARK OFFICE

Commissioner for Patents
United States Patent and Trademark Office
P.O. Box 1450
Alexandria, VA 22313-1450
www.uspto.gov

Date : November 29, 2004

Patent No. :6,626,255
Inventor(s) :Antonio Timm
Issued :September 20, 2003
Title :TOWING VEHICLE FOR TOWING PERONS MOVING ON ROLLERS
:OR GLIDING BODIES

Re: Request for Certificate of Correction

Consideration has been given your request for the issuance of a certificate of correction for the above-identified patent under the provisions of 37 CFR 1.322 and/or 1.323.

Assignees' names and addresses (assignment data) printed in a patent are based *solely* on information supplied in the appropriate space for identifying the assignment data, i.e., item 3 of the Fee(s) Transmittal Form PTOL-85B. After payment of the issue fee, correction of assignment data submitted on the PTOL-85B can only be done by Certificate of Correction under 37 CFR 1.323, with a request under 37 CFR 3.81(b).

A request for a patent to be corrected to state the name of the assignee must:

A. state that the assignment was submitted for recordation as set forth in 37 CFR 3.11 before issuance of the patent;
B. include a request for a certificate of correction under 37 CFR 1.323 along with the fee set forth in 37 CFR 1.20(a); and
C. include the processing fee set forth in 37 CFR 1.17(i).

If the request is granted, Certificates of Correction Branch will be notified that a Certificate of Correction may be issued.

See Manual of Patent Examining Procedure, Section 1481.01 (Rev. 3) (Oct. 2005).

Applicant has not included items A and/or C above, accordingly, the request for Certificate of Correction to add or change the assignee data is dismissed.

Any request under 37 CFR 3.81(b) should be directed to the following address or facsimile number:

By mail: Mail Stop PETITIONS
Commissioner for Patents
Post Office Box 1450
Alexandria, VA 22313-1450

Commissioner for Patents
Post Office Box 1450
Alexandria, VA 22313-1450

By hand: Customer Service Window
Mail Stop Petitions
Randolph Building
401 Dulany Street
Alexandria, VA 22314

By fax: 571-273-8300
ATTN: Office of Petitions

If a fee (currently $100) was previously submitted for consideration of a Request for Certificate of Correction, under CFR 1.323, to correct assignment data, no additional fee is required.

Any inquiry concerning this communication should be directed to Ms. A. Green at (703) 308-9380 ext. 123.

For Cecelia Newman
Decisions & Certificates
of Correction Branch
(703) 308-9390 or (703) 308-9380 Ext. 123

Thomas M. Freiburger
P.O. Box 1026
Tiburon, California 94920

CBN/arg

UNITED STATES PATENT AND TRADEMARK OFFICE

Commissioner for Patents
United States Patent and Trademark Office
P.O. Box 1450
Alexandria, VA 22313-1450
www.uspto.gov

Date : November 30, 2006

Patent No. : 6,626,255 B1
Inventor(s) : Timm
Issued : September 30, 2005
Title : **TOWING VEHICLE FOR TOWING PERSONS MOVING ROLLERS OR GLIDING BODIES**
Docket No. :

Re: Request for Certificate of Correction

Consideration has been given your request for the issuance of a certificate of correction for the above-identified patent under the provisions of 37 CFR 1.322 and/or 1.323.

Assignees' names and addresses (assignment data) printed in a patent are based *solely* on information supplied in the appropriate space for identifying the assignment data, i.e., item 3 of the Fee(s) Transmittal Form PTOL-85B. After payment of the issue fee, correction of assignment data submitted on the PTOL-85B can only be done by Certificate of Correction under 37 CFR 1.323, with a request under 37 CFR 3.81(b).

A request for a patent to be corrected to state the name of the assignee must:

A. state that the assignment was submitted for recordation as set forth in 37 CFR 3.11 before issuance of the patent;
B. include a request for a certificate of correction under 37 CFR 1.323 along with the fee set forth in 37 CFR 1.20(a); and
C. include the processing fee set forth in 37 CFR 1.17(i).

If the request is granted, Certificates of Correction Branch will be notified that a Certificate of Correction may be issued.

See Manual of Patent Examining Procedure, Section 1481.01 (Rev. 3) (Oct. 2005).

Applicant has not included items A and or C above, accordingly, the request for Certificate of Correction to add or change the assignee data is dismissed.

Any request under 37 CFR 3.81(b) should be directed to the following address or facsimile number:

By mail: Mail Stop PETITIONS

Commissioner for Patents
Post Office Box 1450
Alexandria, VA 22313-1450

By hand: Customer Service Window
Mail Stop Petitions
Randolph Building
401 Dulany Street
Alexandria, VA 22314

By fax: 571-273-8300
ATTN: Office of Petitions

If a fee (currently $100) was previously submitted for consideration of a Request for Certificate of Correction, under CFR 1.323, to correct assignment data, no additional fee is required.

For Cecelia Newman
Decisions & Certificates
of Correction Branch
(703) 308-9390 or (703) 308-

THOMAS M. FREIBURGER
P.O. BOX 1026
TIBURON CA 94920

CBN/eme

13 DEC 2004

UNITED STATES PATENT AND TRADEMARK OFFICE

COMMISSIONER FOR PATENTS
UNITED STATES PATENT AND TRADEMARK OFFICE
P.O. BOX 1450
ALEXANDRIA, VA 22313-1450
www.uspto.gov

LEYDIG, VOIT & MAYER
700 Thirteenth Street, N.W., Suite 300
Washington, DC 20005-3960

In re Application of FENDYA, Thomas J. *et al* U.S. Application No.: 09/890,355 PCT No.: PCT/US00/02071 Int. Filing Date: 31 January 2000 Priority Date: 29 January 1999 Attorney's Docket No.: 440490 For: SEPARATION DEVICES AND PROCESSES	**DECISION ON PETITION UNDER 37 CFR 1.182**

This decision is in response to applicants' "Petition Pursuant to 37 CFR 1.182" ("Pet.") filed on 18 November 2004.

BACKGROUND

On 30 July 2001, applicants filed for entry into the national stage in the United States under 35 U.S.C. 371. Applicants listed the international application number as PCT/US00/02701 on the transmittal letter (Form PTO-1390).

On 28 December 2001, the United States Designated/Elected Office (DO/EO/US) mailed a Notification of Missing Requirements Under 35 U.S.C. 371 (Form PCT/DO/EO/905) indicating that a declaration in compliance with 37 CFR 1.497(a) and (b) and a surcharge fee must be provided.

On 28 March 2002, applicants filed a "Response to Notification of Missing Requirements" which was accompanied by, *inter alia*, a one-month extension and $110.00 extension fee, the $130.00 surcharge fee and a declaration executed by four joint inventors. The declaration listed the international application as PCT/US00/02071, not PCT/US00/02701.

On 23 April 2002, the DO/EO/US mailed a Notification of Acceptance of Application Under 35 U.S.C. 371 (Form PCT/DO/EO/903) advising applicants that the 35 U.S.C. 371 requirements were satisfied for the national stage of PCT/US00/02701 on 28 March 2002.

On 18 June 2002, applicant filed a "Letter" which was accompanied by a declaration listing all five joint inventors for PCT/US00/02071. This declaration was in compliance with 37 CFR 1.497(a) and (b).

On 18 November 2004, applicants filed the instant petition under 37 CFR 1.182.

DISCUSSION

Petitioners claim that on entering the national stage on 30 July 2001 for PCT/US00/02071, applicants "incorrectly identified the International Application No. as PCT/US00/02701." Pet. at ¶ 2. Accordingly, petitioners request "for the application corresponding to International Application No. PCT/US00/02071 to be placed in the file and for examination of the correct application." Id. at ¶ 1.

A review of the above-captioned application file revealed that the wrong international application number, *i.e.*, PCT/US00/02701, was designated on the transmittal letter filed with the national stage papers on 30 July 2001. The title, name, and priority date claimed on the transmittal letter corresponded to PCT/US00/02071, not PCT/US00/02701. Applicants also submitted an Application Data Sheet referencing PCT/US00/02071 filed 31 January 2000 and U.S. application No. 60/114,972 filed 29 January 1999 under "Foreign Application Information" with the national stage papers.

Applicants submitted an executed declaration referencing PCT/US00/02071 on 28 March 2002. The DO/EO/US mailed a Form PCT/DO/EO/903 and filing receipt on 23 April 2002 indicating an international application number for the above-captioned application of PCT/US00/02701.

A check of PCT/US00/02071 shows that it has the same title, inventors, priority date and international filing date as listed on the transmittal letter, Application Data Sheet and declaration. Thus, it is clear that a typographical error was made on the transmittal letter. Applicants submitted authorization to charge the required petition fee of $130.00 to Deposit Account No. 12-1216 with the instant petition.

Applicants have met all the requirements of a grantable petition.

CONCLUSION

For the reasons listed above, applicants' petition under 37 CFR 1.182 to correct the PCT application number is **GRANTED**.

The above-captioned application is a national stage of **PCT/US00/2071**.

The Notification of Acceptance of Application Under 35 U.S.C. 371 (Form PCT/DO/EO/903) mailed 23 April 2002 recorded the wrong international application number and priority date for the international application. Hence, it is hereby **VACATED**.

The Office Action mailed 09 July 2004 was based on PCT/US00/02701 and is also **VACATED**.

The declaration filed 28 March 2002 recorded only four joint inventors for PCT/US00/02071. Marc Samson was not listed as a joint inventor. The declaration filed 18 June 2002 lists all five joint inventors and is in compliance with 37 CFR 1.497(a) and (b).

This application is being forwarded to the DO/EO/US to mail a Notification of Acceptance of Application Under 35 U.S.C. 371 indicating an international filing date of 31 January 2000, under 35 U.S.C. 363 and a 35 U.S.C. 371(c)(1), (c)(2) and (c)(4) date of **18 June 2002**, and then mailing a corrected filing receipt.

The application will then be forwarded to Technology Center 2600 for further processing and examination.

James Thomson
Attorney Advisor
Office of PCT Legal Administration

Tel.: (571) 272-3302

UNITED STATES PATENT AND TRADEMARK OFFICE

Commissioner for Patents
United States Patent and Trademark Office
P.O. Box 1450
Alexandria, VA 22313-1450
www.uspto.gov

14 SEP 2006

LEYDIG, VOIT & MAYER
700 Thirteenth Street, N.W., Suite 300
Washington, DC 20005-3960

In re Application of FENDYA, Thomas J. *et al* U.S. Application No.: 09/890,355 PCT No.: PCT/US00/02071 Int. Filing Date: 31 January 2000 Priority Date: 29 January 1999 Attorney's Docket No.: 440490 For: SEPARATION DEVICES AND PROCESSES	:	**DECISION**

This decision is in response to applicants' "Petition to Withdraw Notice of Abandonment Pursuant to 37 CFR § 1.181 . . ." filed on 19 October 2005. NO fee is required.

BACKGROUND

On 13 December 2004, a decision vacating the Office Action dated 09 July 2004 was mailed. The Office Action was vacated because it was based on the wrong international application and had no relation to the above-captioned application. The decision clarified that the subject application was based upon PCT/US00/02071, not PCT/US00/02701.

On 28 December 2004, the DO/EO/US mailed a corrected Notification of Acceptance of Application Under 35 U.S.C. 371 and 1.495 (Form PCT/DO/EO/903) indicating the above-captioned application was the national stage of PCT/US00/02071.

On 15 September 2005, a Notice of Abandonment was mailed for failing to respond to the Office Action dated 09 July 2004.

On 19 October 2005, applicants filed the subject petition requesting to withdraw the holding of abandonment.

DISCUSSION

Upon initial filing of the national stage application, applicants incorrectly identified the International Application No. as PCT/US00/02701.

The application was corrected as the national stage of PCT/US00/02071 by a

decision mailed 13 December 2004.

It was also noted that the Office Action dated 09 July 2004 was based upon the wrong PCT application and was vacated.

Nonetheless, a Notice of Abandonment was mailed for failing to respond to the Office Action dated 09 July 2004. This was sent in error.

CONCLUSION

Applicants' petition to withdraw the holding of abandonment is **GRANTED**.

The Notice of Abandonment mailed 15 September 2005 is hereby **VACATED**.

The application will be forwarded to the appropriate Technology Center for further processing and examination.

James Thomson

James Thomson
Attorney Advisor
Office of PCT Legal Administration

Tel.: (571) 272-3302

UNITED STATES PATENT AND TRADEMARK OFFICE

Commissioner for Patents
United States Patent and Trademark Office
P.O. Box 1450
Alexandria, VA 22313-1450
www.uspto.gov

PHILIPS INTELLECTUAL PROPERTY & STANDARDS
P.O. BOX 3001
BRIARCLIFF MANOR NY 10510

COPY MAILED

NOV 12 2004

OFFICE OF PETITIONS

ON PETITION

In re Application of :
Paulus C. Duineveld, et al. :
Application No. 09/890,364 :
Filed: July 30, 2001 :
Attorney Docket No. PHN-17.755 :

This is a decision on the petition, filed November 12, 2004, under 37 CFR 1.313(c)(2) to withdraw the above-identified application from issue after payment of the issue fee.

The petition is **GRANTED**.

The above-identified application is withdrawn from issue for consideration of a submission under 37 CFR 1.114 (request for continued examination). See 37 CFR 1.313(c)(2).

Petitioner is advised that the issue fee paid on October 20, 2004, using a Certificate of Mailing or Transmission under 37 CFR 1.8 dated October 15, 2004, in the above-identified application cannot be refunded. If, however, the above-identified application is again allowed, petitioner may request that it be applied towards the issue fee required by the new Notice of Allowance. [1]

Telephone inquiries relating to this decision should be directed to the undersigned at (571) 272-3204.

The application is being forwarded to Technology Center AU 2879 for further processing of the request for continued examination under 37 CFR 1.114.

Sherry D. Brinkley
Petitions Examiner
Office of Petitions
Office of the Deputy Commissioner
for Patent Examination Policy

[1] The request to apply the issue fee to the new Notice may be satisfied by completing and returning the new Issue Fee Transmittal Form PTOL-85(b), which includes the following language thereon: "Commissioner for Patents is requested to apply the Issue Fee and Publication Fee (if any) or re-apply any previously paid issue fee to the application identified above." Petitioner is advised that, whether a fee is indicated as being due or not, the Issue Fee Transmittal Form **must** be completed and timely submitted to avoid abandonment. Note the language in bold text on the first page of the Notice of Allowance and Fee(s) Due (PTOL-85).

UNITED STATES PATENT AND TRADEMARK OFFICE

Commissioner for Patents
United States Patent and Trademark Office
P.O. Box 1450
Alexandria, VA 22313-1450
www.uspto.gov

FINNEGAN HENDERSON FARABOW GARRETT &
DUNNER LLP
901 NEW YORK AVE NW
WASHINGTON DC 20001-4413

COPY MAILED

DEC 2 1 2005

OFFICE OF PETITIONS

In re Application of	:
Hirotada Sasaki	: DECISION ON APPLICATION
Application No. 09/890,407	: FOR PATENT TERM ADJUSTMENT
Filed: November 5, 2001	:
Attorney Docket No. 5225.0213	:

This decision is in response to the "APPLICATION FOR PATENT TERM ADJUSTMENT", filed November 4, 2005, notifying the Office of an error in Applicants' favor in the initial determination of patent term adjustment under 35 U.S.C. § 154(b).

The request for correction of the initial determination of patent term adjustment (PTA) is **GRANTED**.

The Office has updated the PAIR screen to reflect that the correct Patent Term Adjustment determination at the time of the mailing of the Notice of Allowance is **fourteen (14)** days. A copy of the updated PAIR screen, showing the correct determination, is enclosed.

On September 22, 2005, the Office mailed the Determination of Patent Term Adjustment under 35 U.S.C. 154(b) in the above-identified application. The Notice stated that the patent term adjustment to date is one hundred eleven (111) days.

The Office initially determined a patent term adjustment of one hundred eleven (111) days based on an adjustment for PTO delay of two hundred twenty-eight (228) days pursuant to 35 U.S.C. 154(b)(1)(A)(i) and 37 C.F.R. § 1.703(a)(1), and twenty-three (23) days pursuant to 35 U.S.C. 154(b)(1)(A)(ii) and 37 C.F.R. § 1.703(a)(2), reduced by twenty-one (21), eighty-eight (88), and thirty-one (31) days of applicant delay pursuant to 35 U.S.C. § 154(b)(2)(C)(ii) and 37 C.F.R. § 1.704(b). The adjustment of 228 days is at issue.

A review of the record reveals that the total PTA should be reduced because the application did not fulfill the requirements of 37 U.S.C. 371 until November 5, 2001, not July 31, 2001 as reflected in PAIR. Pursuant to 37 C.F.R. 1.702(a)(1), the 14 month period for determining PTO delay begins on the date the "application was filed under 35 U.S.C. 111(a) **or fulfilled the requirements of 35 U.S.C. 371**..." (emphasis added).

In view thereof, the correct determination of PTA at the time of the mailing of the Notice of Allowance is **fourteen (14)** days (154 (131+23) days of PTO delay, reduced by 140 (21+88+31) days of applicant delay).

Given the basis for granting this petition, the petition fee will be refunded to petitioner under separate cover. The Office thanks Applicants for their good faith and candor in bringing this matter to the attention of the Office.

The file is being forwarded to the Office of Patent Publication for processing into a patent.

Telephone inquiries specific to this letter should be directed to Cliff Congo, Petitions Attorney, at (571)272-3207.

Kery A. Fries

Kery Fries
Senior Legal Advisor
Office of Patent Legal Administration
Office of Deputy Commissioner
for Patent Examination Policy

Enclosure: Copy of adjusted PAIR calculation

UNITED STATES PATENT AND TRADEMARK OFFICE

COMMISSIONER FOR PATENT
UNITED STATES PATENT AND TRADEMARK OFFIC
WASHINGTON, D.C. 20231
www.uspto.go

JUN 30 2003

Paper No. 10

EPPING, HERMANN & FISCHER
Ridlerstrasse 55
D-80339 MUNICH DE GERMANY

In re Application of	)	
Bernhard Bachl et al.	)	DECISION ON REQUEST TO
Application No. 09/890,411	)	WITHDRAW FROM RECORD
Filed: December 4, 2001	)	
For: ILLUMINATION ARRANGEMENT	)	

This is a decision on the request to withdraw as attorney of record under 37 C.F.R. § 1.36, filed January 31, 2003.

A grantable request to withdraw as attorney of record must be signed by every attorney seeking to withdraw or contain a clear indication that one attorney is signing on behalf of another/others. A request to withdraw will not be approved unless at least 30 (thirty) days would remain between the date of approval and the later of the expiration date of a time to file a response or the expiration date of the maximum time period which can be extended under 37 C.F.R. § 1.136(a).

The request was signed by Jacob Eisenberg on behalf of all attorneys of record, Customer No. 26461.

The request is APPROVED.

Applicant is reminded that there is no attorney of record at this time. The correspondence address of record has been changed and the new correspondence address is the address indicated below.

All future communications from the Office will be directed to the below-listed address until otherwise notified by applicant.

Jose' G Dees, Special Program Examiner
Technology Center 2800
Semiconductors, Electrical and Optical
Systems and Components

cc: Epping, Hermann & Fischer
Ridlerstrasse 55
D-80339 Munich, Germany

AIR MAIL

UNITED STATES PATENT AND TRADEMARK OFFICE

Commissioner for Patents
United States Patent and Trademark Office
P.O. Box 1450
Alexandria, VA 22313-1450
www.uspto.gov

NXP, B.V.
NXP INTELLECTUAL PROPERTY DEPARTMENT
M/S41-SJ
1109 MCKAY DRIVE
SAN JOSE, CA 95131

COPY MAILED

JAN 24 2008

OFFICE OF PETITIONS

In re Application of	:	
Alan Chin Leong Yeo, et. al.	:	
Application No. 09/890,490	:	ON PETITION
Filed: July 31, 2001	:	
Attorney Docket No. PHN 17,751	:	

This is a decision on the petition under 37 CFR 1.137(b), filed on May 3, 2007, to revive the above-identified application.

The above application became abandoned for failure to file a proper reply to the final Office action mailed August 18, 2006.

There is no indication that the person signing the instant petition was ever given a power of attorney or authorization of agent to prosecute the above-identified application. In accordance with 37 CFR 1.34(a), the signature appearing on the petition shall constitute a representation to the United States Patent and Trademark Office that he/she is authorized to represent the particular party in whose behalf he/she acts.

The petition satisfies the requirements of 37 CFR 1.137(b), in that, petitioner has supplied (1) the reply in the form of a Request for Continued Examination (RCE) under 37 CFR 1.114, with the $790 filing fee; (2) the petition fee of $1,500; and (3) a proper statement of unintentional delay. Therefore, the petition is **GRANTED**.

This application is being revived for consideration of the RCE.

The application file is being referred to Technology Center Art Unit 2618, for further processing.

Telephone inquiries concerning this decision should be directed to the undersigned at (571) 272-3226.

Andrea Smith
Petitions Examiner
Office of Petitions

14 APR 2003

UNITED STATES PATENT AND TRADEMARK OFFICE

COMMISSIONER FOR PATENT
UNITED STATES PATENT AND TRADEMARK OFFIC
WASHINGTON, D.C. 20231
www.uspto.go

DAVIDSON, DAVIDSON & KAPPEL, LLC
485 SEVENTH AVENUE, 14TH FLOOR
NEW YORK, NY 10018

In re Application of	:	
KREMERS et al.	:	
Application No.: 09/890,503	:	DECISION ON PETITION
PCT No.: PCT/EP00/00479	:	
Int. Filing Date: 22 January 2000	:	UNDER 37 CFR 1.181
Priority Date: 01 February 1999	:	
Attorney Docket No.: 521.1004	:	
For: SELF-RECOVERING CURRENT-LIMITING	:	
DEVICE WITH LIQUID METAL	:	

This is a decision on applicants' "Petition Under 37 CFR 1.181 to Withdraw the Holding of Abandonment" filed in the United States Patent and Trademark Office (USPTO) in the above referenced application on 27 November 2002. No petition fee is required.

BACKGROUND

On 13 September 2001, a Notification of Missing Requirements (Form PCT/DO/EO/905) was mailed to applicants indicating that an oath or declaration in compliance with 37 CFR 1.497(a) and (b) and the surcharge for filing the oath or declaration after the thirty month period were required. A two month period of time was set to respond to the Notification with extensions of time available under 37 CFR 1.136(a).

On 13 November 2002, a Notification of Abandonment (Form PCT/DO/EO/909) was mailed to applicants indicating that applicants had failed to respond to said Notification of Missing Requirements within the time period set forth.

Applicant submitted the instant petition under 37 CFR 1.181 on 27 November 2002, requesting withdrawal of the holding of abandonment. Applicant provided a copy of the executed declaration allegedly deposited on 02 November 2001 and allegedly received in the USPTO on 04 February 2002 along with a itemized postcard receipt date-stamped 04 February 2002. However, the declaration is not itemized on the USPTO date-stamped post card receipt.

DISCUSSION

In his 27 November 2002 submission, applicant alleges that he originally mailed an executed declaration on 02 November 2001 and submits a postcard receipt date-stamped by the USPTO "04 February 2002". A review of the finance records for this application indicates that the $130 surcharge was paid on 04 February 2002. However, the original declaration is not found in the application file. Applicant filed a copy of the alleged earlier filed declaration with his petition. It is noted that the copy of the postcard receipt date-stamped 04 February 2002 does not indicate that the executed declaration was filed but that a 2 page assignment was submitted.

A postcard receipt which itemizes and properly identifies the items which are being filed serves as *prima facie* evidence of receipt in the USPTO of all the items listed thereon, on the date stamped thereon by the USPTO. In the instant case, the records of the Office (e.g., the file of the application) do not contain the declaration allegedly submitted by applicant on 04 February 2002. The Office will rely upon its official record of the contents of such correspondence in absence of convincing evidence (e.g., a postcard receipt under MPEP § 503 containing specific itemization of the document(s) or fee(s) purported to have been filed with the correspondence at issue) that the Office received and misplaced these documents that are not among the official records of the Office. *See* MPEP §503, p.500-14.

Without proof of the submission of an executed declaration, the application must be considered abandoned for failure to timely respond to the Notification of Missing Requirements. In requesting withdrawal of the abandonment of the application, applicant must file a renewed petition under 37 CFR 1.181 and provide a true copy of the USPTO date-stamped itemized postcard receipt indicating the filing of the *declaration*. Applicant has not explained how post card receipt submitted with the petition is proof that the *declaration* was submitted on 04 February 2002.

The evidence submitted is insufficient to establish that the declaration for this application was received in the USPTO on 04 February 2002. Accordingly, it is inappropriate to withdraw the holding of abandonment at this time, without proof that the declaration with a deposit date of 04 February 2002 was filed.

CONCLUSION

For the reasons stated above, the petition under 37 CFR 1.181 is **DISMISSED WITHOUT PREJUDICE**.

The application remains **ABANDONED**.

Any reconsideration on the merits of this petition should be entitled "Renewed Petition under 37 CFR 1.181".

Applicant is advised that, effective May 1, 2003, the Office is changing its correspondence address. Any further correspondence with respect to this matter deposited with the United States Postal Service on or after May 1, 2003 should be addressed to the Mail Stop

PCT, Commissioner for Patents, Office of PCT Legal Administration, P.O. Box 1450, Alexandria, Virginia 22313-1450, with the contents of the letter marked to the attention of the Office of PCT Legal Administration.

Cynthia M. Kratz

Cynthia M. Kratz
Attorney Advisor
PCT Legal Office

Telephone: (703) 306-5467
CMK/cmk

03 JUN 2004
UNITED STATES PATENT AND TRADEMARK OFFICE

#7

COMMISSIONER FOR PATENTS
UNITED STATES PATENT AND TRADEMARK OFFICE
WASHINGTON, D.C. 20231
www.uspto.gov

DAVIDSON, DAVIDSON & KAPPEL, LLC
485 SEVENTH AVENUE, 14TH FLOOR
NEW YORK, NY 10018

In re Application of	:	
KREMERS et al.	:	
Application No.: 09/890,503	:	DECISION ON
PCT No.: PCT/EP00/00479	:	
Int. Filing Date: 22 January 2000	:	RENEWED PETITION
Priority Date: 01 February 1999	:	
Attorney Docket No.: 521.1004	:	UNDER 37 CFR 1.181
For: SELF-RECOVERING CURRENT-LIMITING	:	
DEVICE WITH LIQUID METAL	:	

This is a decision on applicants' "Renewed Petition Under 37 CFR 1.181 to Withdraw the Holding of Abandonment" filed in the United States Patent and Trademark Office (USPTO) in the above referenced application on 25 April 2003 and refiled via facsimile on 23 April 2004. No petition fee is required.

BACKGROUND

On 13 September 2001, a Notification of Missing Requirements (Form PCT/DO/EO/905) was mailed to applicants indicating that an oath or declaration in compliance with 37 CFR 1.497(a) and (b) and the surcharge for filing the oath or declaration after the thirty month period were required. A two month period of time was set to respond to the Notification with extensions of time available under 37 CFR 1.136(a).

On 13 November 2002, a Notification of Abandonment (Form PCT/DO/EO/909) was mailed to applicants indicating that applicants had failed to respond to said Notification of Missing Requirements within the time period set forth therein.

Applicant submitted a petition under 37 CFR 1.181 on 27 November 2002, requesting withdrawal of the holding of abandonment. Applicant provided a copy of the executed declaration allegedly deposited on 02 November 2001 and allegedly received in the USPTO on 04 February 2002 along with a itemized postcard receipt date-stamped 04 February 2002. However, the declaration was not itemized on the USPTO date-stamped post card receipt. On 14

April 2003, a decision dismissing applicant's petition was mailed indicating that applicant had not provided proof that the two page declaration was filed on 04 February 2002..

In the renewed petition petitioner filed on 25 April 2003, counsel indicates that the postcard receipt date-stamped by the USPTO 04 February 2001 contains a typographical error; that is, the indication that an assignment was enclosed was in error. The postcard should have indicated that a declaration was enclosed.

DISCUSSION

The original declaration is not found in the application file. The copy of the postcard receipt date-stamped 04 February 2002 does not indicate that the executed declaration was filed but that a 2 page assignment was submitted.

Applicant requests reconsideration of the 14 April 2003 decision. In his 23 April 2003 request for reconsideration, applicant alleges that he responded to the Notice of Missing Requirements, contrary to the indication on the Notification of Abandonment. Counsel argues that the postcard "clearly indicated the submission of a response to the Notice of Missing Requirements". Counsel also contends that the itemized postcard receipt date-stamped by the USPTO "04 February 2002" contained a typographical error and the postcard receipt should have indicated that a "declaration" was filed. Counsel asserts that "The postcard erroneously itemized an executed assignment instead of an executed declaration. This was a secretarial, typographical error on the postcard only." The submission of the assignment is not considered a *bona fide* response to the Notification of Missing Requirements. The Notification of Abandonment was properly issued on 13 November 2002.

As stated in the MPEP, a postcard receipt which itemizes and properly identifies the items which are being filed serves as *prima facie* evidence of receipt in the USPTO of all the items listed thereon, on the date stamped thereon by the USPTO. However, the post card receipt does not serve as *prima facie* evidence of receipt of *any item which is not adequately itemized on the postcard.* Each separate component should be specifically and properly itemized on the postcard.

Upon return of a postcard receipt from the USPTO, the postcard receipt should be promptly reviewed by the person who filed the items to ensure that every item specifically denoted on the postcard was received by the USPTO. Where the postcard receipt does not indicate that a particular item was received by the USPTO, the postcard receipt will not serve as *prima facie* evidence of receipt of that item in the USPTO. *See* MPEP §503, p.500-15.

In the instant case, the application file does not contain the declaration allegedly submitted by applicant on 04 February 2002. The Office relies upon its official record of the contents of such correspondence in absence of convincing evidence (e.g., a postcard receipt under MPEP § 503 containing specific itemization of the document(s) or fee(s) purported to have been filed with the correspondence at issue) that the Office received and misplaced these documents that are not among the official records of the Office. (p. 500-14). Applicant has not provided any proof that the declaration was actually filed on 04 February 2002.

Without proof of the submission of an executed declaration within the time period set forth in the Notification of Missing Requirements, the application remains abandoned for failure to timely respond to the Notification of Missing Requirements with a proper reply; that is, providing an oath or declaration executed by the inventors, in compliance with 37 CFR 1.497(a) &(b), which properly identifies the application. The submission of an assignment on 04 February 2002 is not a *bona fide* or proper reply to the Notification of Missing Requirements.

Applicant has not provided proof that the declaration was received in the USPTO on 04 February 2002. Accordingly, it is inappropriate to withdraw the holding of abandonment. The application remains abandoned. Applicant may wish to consider filing a petition to revive under 37 CFR 1.137(a) or (b) in a timely manner and is advised to review MPEP §711.03(c) for further instructions.

Finally , it is noted that the copy of the declaration submitted with the renewed petition is defective; in that, the citizenship of the named inventors does not appear on first page of the declaration. The citizenship appears to have been cut off during reproduction. Thus, the declaration is not in compliance with 37 CFR 1.497(a) & (b) and is unacceptable. Applicant is advised to file another executed copy of the declaration which includes the citizenship of the inventors. In the event that applicant's copy of the declaration does not include the citizenship of the inventors, a newly executed declaration is required which identifies the citizenship of the inventors and is in compliance with 37 CFR 1.497(a) & (b).

CONCLUSION

For the reasons stated above, the petition under 37 CFR 1.181 is **DISMISSED WITHOUT PREJUDICE**. The application remains **ABANDONED**.

Any further correspondence with respect to this matter should be addressed to the Mail Stop PCT, Commissioner for Patents, Office of PCT Legal Administration, P.O. Box 1450, Alexandria, Virginia 22313-1450, with the contents of the letter marked to the attention of the Office of PCT Legal Administration.

Cynthia M. Kratz

Cynthia M. Kratz
Attorney Advisor
Office of PCT Legal Administration

Telephone: (703) 306-5467

06 JUL 2004

#9

UNITED STATES PATENT AND TRADEMARK OFFICE

COMMISSIONER FOR PATENTS
UNITED STATES PATENT AND TRADEMARK OFFICE
P.O. BOX 1450
ALEXANDRIA, VA 22313-1450
www.uspto.gov

DAVIDSON, DAVIDSON & KAPPEL, LLC
485 SEVENTH AVENUE, 14TH FLOOR
NEW YORK, NY 10018

In re Application of KREMERS et al. Application No.: 09/890,503 PCT No.: PCT/EP00/00479 Int. Filing Date: 22 January 2000 Priority Date: 01 February 1999 Attorney Docket No.: 521.1004 For: SELF-RECOVERING CURRENT-LIMITING DEVICE WITH LIQUID METAL	DECISION ON PETITION UNDER 37 CFR 1.137(b)

The petition to revive under 37 CFR 1.137(b) filed 17 June 2004 in the above-captioned application is hereby **GRANTED** as follows:

Applicants' statement that the "entire delay in filing the required reply from the due date for the required reply until the filing of a grantable petition under 37 CFR 1.137(b) was unintentional" meets the requirements of 37 CFR 1.137(b)(3).

A review of the application file reveals that the proper reply, that is, declaration executed by the inventors which is in compliance with 37 CFR 1.497(a) & (b was provided. The required petition fee of $1330 was also paid. Thus, the requirements of 37 CFR 1.137(b) have been satisfied. Therefore, the request to revive the application abandoned under 35 U.S.C. 371(d) is granted as to the National stage in the United States of America.

This application is being forwarded to the United States Designated/Elected Office for further processing. The 35 U.S.C. 371(c)(1),(c)(2) and (c)(4) date is **17 June 2004.**

Cynthia M. Kratz

Cynthia M. Kratz
Attorney Advisor
Office of Patent Cooperation Treaty
Legal Administration Office

Telephone: (703) 306-5467
Facsimile : (703) 308-6459