UNITED STATES PATENT AND TRADEMARK OFFICE

Commissioner for Patents
United States Patent and Trademark Office
P.O. Box 1450
Alexandria, VA 22313-1450
www.uspto.gov

Paper No. 12

BUTZEL LONG
DOCKETING DEPARTMENT
100 BLOOMFIELD HILLS PARKWAY
SUITE 200
BLOOMFIELD HILLS, MI 48304

COPY MAILED

JUN 01 2005

OFFICE OF PETITIONS

In re Application of

Hao-Chiao Hong

Application No. 09/974,084

Filed: October 10, 2001

Attorney Docket No. **147268.00313**

DECISION ON PETITION

This is a decision on the petition under 37 CFR 1.137(b), filed February 10, 2005, to revive the above-identified application.

The petition is **GRANTED**.

The above-cited application became abandoned on January 30, 2003, for failure to file a proper response to the final Office action mailed October 29, 2002. The final Office action set a shortened statutory period for reply of three months from its mailing date. An amendment was filed on December 19, 2002, but did not place the application in condition for allowance. No further responses were received within the allowable period, and the application became abandoned on January 30, 2003. A Notice of Abandonment was mailed on June 13, 2003.

The above-identified application had been abandoned for an extended period of time. The Patent and Trademark Office is relying on petitioner's duty of candor and good faith and accepting the statement that the entire delay in filing the required reply from the due date of the reply until the filing of a grantable petition pursuant to 37 CFR 1.1379b) was unintentional. See *Changes to Patent Practice and Procedure*, 62 Fed. Reg, at 53160 and 53178.

The Request for Continued Examination and amendment filed February 10, 2005, are noted.

The application is being directed to Technology Center 2800, GAU 2838 for further processing.

Telephone inquiries concerning this decision should be directed to the undersigned at (571) 272-3222.

Kenya A. McLaughlin

Kenya A. McLaughlin
Petitions Attorney
Office of Petitions

UNITED STATES PATENT AND TRADEMARK OFFICE

COMMISSIONER FOR PATENTS
UNITED STATES PATENT AND TRADEMARK OFFICE
WASHINGTON, D.C. 20231
www.uspto.gov

Paper No. 5

Michael P. Dilworth
CROMPTON CORPORATION
Benson Road
Middlebury, CT 06749

COPY MAILED

JUL 2 4 2002

OFFICE OF PETITIONS

In re Application of :
Kenrick M. Lewis, et al. :
Application No. 09/974,092 :
Filed: October 9, 2001 :
Attorney Docket No. 0067-OS :

ON PETITION

This is a decision on the petition under 37 CFR 1.137(b), filed June 27, 2002, to revive the above-identified application.

The petition is **GRANTED**.

The above-identified application became abandoned for failure to reply in a timely manner to the Notice To File Missing Parts Of Non-Provisional Application mailed November 13, 2001. The Notice set a period for reply of two(2) months from the mail date of the Notice. No extensions of time under the provisions of 37 CFR 1.136(a) were obtained. Accordingly, the above-identified application became abandoned on January 14, 2002.

Telephone inquiries concerning this decision should be directed to Cheryl Gibson-Baylor at (703)308-5111, or in her absence, Sherry Brinkley at (703)305-9220.

The application file is being forwarded to Office of Initial Patent Examination for further processing.

Cheryl Gibson-Baylor
Petitions Examiner
Office of Petitions
Office of the Deputy Commissioner
for Patent Examination Policy

Sherry Brinkley
Petitions Examiner

UNITED STATES PATENT AND TRADEMARK OFFICE

Commissioner for Patents
United States Patent and Trademark Office
P.O. Box 1450
Alexandria, VA 22313-1450
www.uspto.gov

Paper No. 15

GEAM – SILICONES – 60SI
IP LEGAL
ONE PLASTICS AVENUE
PITTSFIELD, MA 01201-3697

COPY MAILED
APR 1 1 2005
OFFICE OF PETITIONS

In re Application of :
Kenrick M. Lewis, et al. :
Application No. 09/974,092 : ON PETITION
Filed: October 9, 2001 :
Attorney Docket No. 0067-OS :

This is a decision on the petition under 37 CFR 1.137(b), filed February 16, 2005, to revive the above-identified application.

The petition is **GRANTED.**

The above-identified application became abandoned for failure to reply in a timely manner to the non-final Office action mailed August 13, 2003, which set a shortened statutory period for reply of three (3) months. No extensions of time under the provisions of 37 CFR 1.136(a) were obtained. Accordingly, the application became abandoned on November 14, 2003.

It is not apparent whether the person signing the statement of unintentional delay was in a position to have firsthand or direct knowledge of the facts and circumstances of the delay at issue. Nevertheless, such statement is being treated as having been made as the result of a reasonable inquiry into the facts and circumstances of such delay. See 37 CFR 10.18(b) and Changes to Patent Practice and Procedure; Final Rule Notice, 62 Fed. Reg. 53131, 53178 (October 10, 1997), 1203 Off. Gaz. Pat. Office 63, 103 (October 21, 1997). In the event that such an inquiry has not been made, petitioner must make such an inquiry. If such inquiry results in the discovery that it is not correct that the entire delay in filing the required reply from the due date for the reply until the filing of a grantable petition pursuant to 37 CFR 1.137(b) was unintentional, petitioner must notify the Office.

There is no indication that the person signing the instant petition was ever given a power of attorney or authorization of agent to prosecute the above-identified application. If the person signing the instant petition desires to receive future correspondence regarding this application, the appropriate power of attorney or authorization of agent must be submitted. While a courtesy copy of this decision is being mailed to the person signing the instant petition, all future

correspondence will be directed to the address currently of record until such time as appropriate instructions are received to the contrary.

Receipt is acknowledged of the Amendment filed February 16, 2005, with the instant petition.

Telephone inquiries concerning this decision should be directed to the undersigned at (571) 272-3229.

The application file is being forwarded to Technology Center 1600, Art Unit 1621 for processing the Request for Continued Examination under 37 CFR 1.114 filed with the instant petition.

Retta Williams

Retta Williams
Petitions Examiner
Office of Petitions
Office of the Deputy Commissioner
for Patent Examination Policy

cc: George M. Kaplan
Dilworth & Barrese, LLP
333 Earle Ovington Blvd.,
Uniondale, NY 11553

UNITED STATES PATENT AND TRADEMARK OFFICE

Commissioner for Patents
United States Patent and Trademark Office
P.O. Box 1450
Alexandria, VA 22313-1450
www.uspto.gov

TOWNSEND AND TOWNSEND AND CREW, LLP
TWO EMBARCADERO CENTER
EIGHTH FLOOR
SAN FRANCISCO, CA 94111-3834

COPY MAILED

MAR 0 1 2007

OFFICE OF PETITIONS

In re Application of
Yuzo Hiroshige, et al.
Application No. **09/974,097**
Filed: **October 9, 2001**
Attorney Docket No. **16869P-034200US**

DECISION ON PETITION

This is a decision on the petition under the unintentional provisions of 37 CFR 1.137(b), filed September 20, 2006, to revive the above-identified application.

The petition is **GRANTED**.

The application became abandoned for failure to reply in a timely manner to the non-final Office action mailed, January 27, 2006, which set a shortened statutory period for reply of three (3) months. No extensions of time under the provisions of 37 CFR 1.136(a) were obtained. Accordingly, the application became abandoned on April 28, 2006.

The petition satisfies the requirements of 37 CFR 1.137(b) in that petitioner has supplied (1) the reply in the form of an amendment, (2) the petition fee of $1500; and (3) an adequate statement of unintentional delay.

Telephone inquiries concerning this decision should be directed to April Wise at (571) 272-1642.

This application is being referred to Technology Center AU 2157 for appropriate action by the Examiner in the normal course of business on the reply received

Irvin Dingle
Petitions Examiner
Office of Petitions

SPE RESPONSE FOR CERTIFICATE OF CORRECTION

Paper No.: _____

DATE : 4-16-08

TO SPE OF : ART UNIT 3738

SUBJECT : Request for Certificate of Correction on Patent No.: 6887274/09/924154

A response is requested with respect to the accompanying request for a certificate of correction.

Please complete this form and return with file, within **7** days to:
Palm location **7580, Certificates of Correction Branch – South Tower – 9A22**
If response is for an IFW, **return to employee (named below) via PUBSCofC Team in MADRAS.**
With respect to the change(s) requested, correcting Office and/or Applicant's errors, should the patent read as shown in the certificate of correction (COCIN)? No new matter should be introduced, nor should the scope or meaning of the claims be changed.

Please reply A/S/A/P

Eva James

Thank You For Your Assistance

Certificates of Correction Branch
Tel. No. 703-305-8309

The request for issuing the above-identified correction(s) is hereby:
Note your decision on the appropriate box.

- ☐ **Approved** — **All** changes apply.
- ☐ **Approved in Part** — Specify below which changes **do not** apply.
- ☒ **Denied** — State the reasons for denial below.

Comments:

The change in claim to priority requires new considerations.

/Corrine McDermott/ — **SPE**

3738 — **Art Unit**

9-19-08

UNITED STATES DEPARTMENT OF COMMERCE
Patent and Trademark Office
ASSISTANT SECRETARY OF COMMERCE AND
COMMISSIONER OF PATENTS AND TRADEMARKS
Washington, D.C. 20231

Patent No. : 6,887,274 B2
Inventor(s) : James D. Ralph, et. al.
Issued : May 3, 2005
For: INTERVERTEBRAL SPACER DEVICE UTILIZING A BELLEVILLE WASHER HAVING RADIALLY SPACED CONCENTRIC GROVES

Request for Certificate of Correction

Consideration has been given your request for the issuance of a certificate of correction under Rule 1.323and 1.322.

On the title page, item [63], the change in claim to priority requires new considerations and should not be allowed.

In view of the foregoing, your request is hereby denied.

Eva James
Fo;r Mary Diggs
Decisions & Certificate
of Correction Branch
(703) 308-9390 ext.124 or 125

Braian R. Tomkins
Lerner, David, Littenberg, Krumholz & Mentlik, LLP
600 South Avenue West
Westfield, New Jersey 07090

ej

UNITED STATES PATENT AND TRADEMARK OFFICE

Commissioner for Patents
United States Patent and Trademark Office
P.O. Box 1450
Alexandria, VA 22313-1450
www.uspto.gov

MAILED

JUN 0 2 2009

OFFICE OF PETITIONS

SPINE MP
LERNER, DAVID, ET AL
600 SOUTH AVENUE WEST
WESTFIELD, NJ 07090

In re Patent No. 6,887,274
Issue Date: May 3, 2005
Application No. 09/974,154
Filed: October 11, 2001
Attorney Docket No. SPINE 3.0-436 CIP CIP
CIP

: DECISION DISMISSING PETITION
: UNDER 37 CFR 1.78(a)(3) AND
: REQUEST FOR CERTIFICATE OF
: CORRECTION
:

This is a decision on the petition, filed November 17, 2008 under 37 CFR 1.78(a)(3), seeking to add a claim for priority under 35 U.S.C. § 120 to nonprovisional Application No. 09/968,046, filed October 1, 2001, by way of a certificate of correction since this case issued prior to the rendering of a decision on this petition.

The petition is **dismissed**.

A review of the file record fails to disclose that a claim for the benefit of priority to the above-noted, prior-filed nonprovisional application was made within the time period set forth in 37 CFR 1.78(a)(2)(ii) and further failed to include a proper reference to the prior-filed application as required by 37 CFR 1.78(a)(2)(i) and 1.78(a)(2)(iii).

The instant application was filed October 11, 2001. Therefore, since this application was filed after November 29, 2000, a petition under 37 CFR 1.78(a)(3), along with submission of a Certificate of Correction, is the appropriate avenue of relief to accept a late claim for the benefit of priority to a prior-filed nonprovisional application after issuance of the application into a patent. *See* MPEP 1481.

A petition for acceptance of a claim for late priority under 37 CFR 1.78(a)(3) must be accompanied by:

(1) the reference required by 35 U.S.C. § 120 and 37 CFR 1.78(a)(2)(i) of the prior-filed application, unless previously submitted;
(2) the surcharge set forth in § 1.17(t); and
(3) a statement that the entire delay between the date the claim was due under 37 CFR 1.78(a)(2)(ii) and the date the claim was filed was unintentional. The Director may require additional information where there is a question whether the delay was unintentional.

The instant petition lacks item (1) and a proper certificate of correction.

The applicant must have the certificate of correction amend the first sentence of the specification. Moreover, it is not sufficient to just identify all of the prior applications in the chain. To be proper, the appropriate references must have actually been made in each intermediate application in the chain of prior applications. If an applicant desires, for example, the following benefit claim: "this application is a continuation of Application No. C, filed ---, which is a continuation of Application No. B, filed ---, which claims the benefit of provisional Application No. A, filed ---," then Application No. C must have a reference to Application No. B andprovisional Application No. A, and Application No. B must have a reference to provisional Application No. A.

The certificate of correction filed November 17, 2008 states "on the cover page, section (63), after "2001", please insert the following--, which is a CIP of 09/968,046 filed on Oct. 1, 2001, now abandoned.-" The certificate of correction must also amend the first sentence of the specification.

Application No. 09/970,479 does not claim benefit of 09/968,046 rather it claims benefit of 09/789,936. Therefore the benefit claim in 09/970,479 must be corrected before a decision can be granted.

Further correspondence with respect to this matter should be addressed as follows:

By mail: Mail Stop PETITIONS
Commissioner for Patents
Post Office Box 1450
Alexandria, VA 22313-1450

By hand: Customer Service Window
Mail Stop Petitions
Randolph Building
401 Dulany Street
Alexandria, VA 22314

By fax: (571) 273-8300
ATTN: Office of Petitions

Any questions concerning this matter may be directed to Irvin Dingle at (571) 272-3210.

David Bucci
Petition Examiner
Office of Petitions

UNITED STATES PATENT AND TRADEMARK OFFICE

COMMISSIONER FOR PATENTS
UNITED STATES PATENT AND TRADEMARK OFFICE
P.O. BOX 1450
ALEXANDRIA, VA 22313-1450
www.uspto.gov

Paper No. 23

COOLEY GODWARD LLP
ATTN: PATENT GROUP
11951 FREEDOM DRIVE, SUITE 1700
ONE FREEDOM SQUARE- RESTON TOWN CENTER
RESTON VA 20190-5061

COPY MAILED

APR 0 8 2004

OFFICE OF PETITIONS

In re Application of

Braun, et al.

Application No. 09/974,197

Filed: October 9, 2001

Attorney Docket No. IMMR-021/01US

DECISION ON PETITION

This is a decision on the petition under 37 CFR 1.137(b), filed February 11, 2004, to revive the above-identified application.

The petition is GRANTED.

The above-cited application became abandoned for failure to reply in a timely manner to the final Office action mailed August 6, 2003, which set a shortened statutory period for reply of three (3) months. A response was filed on December 8, 2003, that failed to place the application in condition for allowance. No other reply was received within the allowable period and the application became abandoned on December 7, 2003.

The Request for Continued Examination and amendment filed February 11, 2004, are noted and made of record.

The request for an extension of the time set for reply is noted, however; an extension of time is not necessary because the maximum statutory period for reply to the final Office action has expired. The amount of $840.00 will be refunded to deposit account 50-1283, in due course.

The application is being forwarded to Technology Center 2600 for further processing.

Telephone inquiries concerning this decision should be directed to the undersigned at (703) 305-0010.

Kenya A. McLaughlin

Kenya A. McLaughlin
Petitions Attorney
Office of Petitions

UNITED STATES PATENT AND TRADEMARK OFFICE

Commissioner for Patents
United States Patent and Trademark Office
P.O. Box 1450
Alexandria, VA 22313-1450
www.uspto.gov

Mailed: 10/20/04

wak
Paper Number 9

In re application of
Stebbing
Serial No. 09/974,199
Filed: October 10, 2001
For: METHOD OF MELTING A MIXTURE OF SCRAP METAL USING SCRAP RUBBER

DECISION ON PETITION

This is a response to the REQUEST FOR STATUS filed February 20, 2004, which is being treated as a request for WITHDRAWAL OF HOLDING OF ABANDONMENT OR REVIVAL OF ABANDONED APPLICATION. A Notice of Abandonment was mailed on January 9, 2004, for failure to respond to the Office Action mailed July 31, 2003.

DECISION

The instant request has been accepted as a petition to withdraw the holding of abandonment under the provisions of 37 CFR 1.181 (no fee) - no abandonment-in-fact. The Office mailed a final rejection out on June 16, 2003. Applicant responded to the final rejection on July 21, 2003 with an amendment and a properly executed power of attorney with a new address and firm. The Office sent out an advisory and notice of abandonment to the old firm

The Petition is **DENIED.**

The amendment filed July 21, 2003 did not place the application in condition for allowance. The application is abandoned as of January 22, 2003. The final rejection was properly mailed to the attorney of record at that time. The Office cannot reset the time period set forth in the final Office action after the expiration of the statutory period, which is 6 months from the date of the final rejection.

JMStone

Jacqueline Stone, Director
Technology Center 1700
Chemical and Materials Engineering

Peter C. Stomma
Boyle, Fredrickson, Newholm, Stein & Gratz, S.C.
250 Plaza, Suite 1030
250 East Wisconsin Avenue
Milwaukee, WI 53202

UNITED STATES PATENT AND TRADEMARK OFFICE

Commissioner for Patents
United States Patent and Trademark Office
P.O. Box 1450
Alexandria, VA 22313-1450
www.uspto.gov

PETER C. STOMMA
BOYLE, FREDRICKSON, NEWHOLM, STEIN & GRATZ, S.C.
250 EAST WISCONSIN AVENUE, SUITE 1030
MILWAUKEE, WI 53202

COPY MAILED

FEB 07 2005

OFFICE OF PETITIONS

In re Application of	:	
Franklin Leroy Stebbing	:	
Application No. 09/974,199	:	ON PETITION
Filed: October 10, 2001	:	
Attorney Docket No. 929.001	:	

This is a decision on the petition under 37 CFR 1.137(b), filed November 9, 2004, to revive the above-identified application.

The petition is **GRANTED.**

The above-identified application became abandoned for failure to reply in a timely manner to the final Office action mailed June 16, 2003, which set a shortened statutory period for reply of three (3) months. No extensions of time under the provisions of 37 CFR 1.136(a) were obtained. An Advisory action was also mailed July 31, 2003 indicating that the reply filed on July 21, 2003 failed to place the application in condition for allowance. Accordingly, the application became abandoned on October 1, 2003.

An extension of time under 37 CFR 1.136 must be filed prior to the expiration of the maximum extendable period for reply. See In re Application of S., 8 USPQ2d 1630, 1631 (Comm'r Pats. 1988). Accordingly, the $475 extension of time submitted on May 18, 2004 was subsequent to the maximum extendable period for reply, this fee is unnecessary and will be credited to petitioner's deposit account number 50-1170.

The Power of Attorney and Change of Correspondence Address has been accepted and recorded.

Since the present RCE was filed without a submission, the unentered amendment filed July 19, 2003 will be considered the submission required under 37 CFR 1.114.

Telephone inquiries concerning this decision should be directed to the undersigned at (571) 272-3229.

The application file is being forwarded to Technology Center 1700, Art Unit 1742 for processing the Request for Continued Examination under 37 CFR 1.114 filed with the instant petition.

Retta Williams

Retta Williams
Petitions Examiner
Office of Petitions
Office of the Deputy Commissioner
for Patent Examination Policy

UNITED STATES PATENT AND TRADEMARK OFFICE

UNDER SECRETARY OF COMMERCE FOR INTELLECTUAL PROPERTY AND
DIRECTOR OF THE UNITED STATES PATENT AND TRADEMARK OFFICE
WASHINGTON, DC 20231
www.uspto.gov

MAILED

JUL 25 2003

DIRECTOR'S OFFICE
TECHNOLOGY CENTER 3600

Paper No. 8

Clifford Chance Rogers & Wells LLP
200 Park Avenue
New York, NY 10166-0153

In re application of
David Lawrence
Application No. 09/974,212
Filed: October 9, 2001

: **DECISION ON PETITION**
: **TO MAKE SPECIAL**
: **(COUNTER TERRORISM)**
or
(ACCELERATED EXAMINATION)

For: ELECTRONIC SUBPOENA SERVICE

This is in response to the petition filed on October 16, 2001 and the supplemental petition filed on April 29, 2003 to make the above-identified application special on the basis of accelerated examination as set forth in MPEP § 708.02 VIII, or alternatively inventions for countering terrorism as set forth in MPEP § 708.02 XI

The delay in treating this petition is sincerely regretted.

The requirements for granting special status under accelerated examination as set forth in MPEP § 708.02 VIII are: (A) a petition to make special accompanied by the fee set forth in 37 CFR 1.17(i); (B) all claims being directed to a single invention, or an election without traverse if the Office determines that all the claims are not directed to a single invention; (C) a statement that a pre-examination search was made listing the field of search; (D) one copy of each of the references deemed most closely related to the subject matter encompassed by the claims if said references are not already of record; and (E) a detailed discussion of how the claimed subject matter is patentable over the references.

Since all of the requirements for special status under MPEP § 708.02 VIII have been met, the petition is **GRANTED**.

In view of the granting of the Petition to make Special based upon accelerated examination as set forth in MPEP § 708.02 VIII any determination of the counter terrorism grounds for making the application special is now moot and thus will not be treated on those grounds

The examiner is directed (1) to make an interference search for possible interfering applications, (2) to promptly examine this application out of turn, and (3) if any interfering application is discovered, to examine such application simultaneously and state in the first official letter of such application that it is being taken out of turn because of a possible interference.

Petitioner is advised that this application will continue to be special, throughout its entire prosecution and pendency, including interference or appeal, if any, only if petitioner makes a prompt ***bona fide*** effort, in response to each Office action, to place the application in condition for allowance, even if it is necessary to conduct an interview with the examiner to accomplish this purpose.

Kenneth J. Dorner
Special Programs Examiner
Technology Center 3600
(703) 308-0866
(703) 605-0586 (fax)

KJD/ekn: 7/18/03

3629

THE SPE/EXAMINER NEEDS TO FILL OUT THE FOLLOWING PRIOR TO A DECISION BEING MADE ON THE PETITION TO MAKE SPECIAL

☑ THERE IS NO RESTRICTION/ELECTION REQUIRED IN THIS CASE

JOHN G. WEISS
SUPERVISORY PATENT EXAMINER
TECHNOLOGY CENTER 3600

☐ THERE IS A RESTRICTION/ELECTION REQUIRED AND THE ATTORNEY HAS ELECTED WITHOUT TRAVERSE

☐ THERE IS A RESTRICTION/ELECTION REQUIRED AND THE ATTORNEY HAS REFUSED TO ELECT WITHOUT TRAVERSE (MAKE SURE ATTORNEY KNOWS THAT HIS PETITION TO MAKE SPECIAL WILL BE DENIED IF HE REFUSES TO ELECT OR IF HE ELECTS WITH TRAVERSE)

PLEASE RETURN THE CASE ASAP TO:

SPRE DETAILEE **CPK5-8A03**

(UNDER NO CIRCUMSTANCES SHOULD AN OFFICE ACTION BE ISSUED PRIOR TO THE PETITION BEING DECIDED)

Jan, see me. JW

UNITED STATES PATENT AND TRADEMARK OFFICE

COMMISSIONER FOR PATENTS
UNITED STATES PATENT AND TRADEMARK OFFICE
P.O. BOX 1450
ALEXANDRIA, VA 22313-1450
www.uspto.gov

Paper No. 11

Brown, Raysman, Millstein, Felder & Steiner, LLP
900 Third Avenue
New York, NY 10022

COPY MAILED
NOV 24 2003
OFFICE OF PETITIONS

In re Application of Gil Raanan, et. al. Application No. 09/974,214 Filed: September 14, 2001 Attorney Docket No. 3269/6A	: : : : :	ON PETITION

This is a decision on the petition under 37 CFR 1.137(b), filed September 22, 2003, to revive the above-identified application.

The above-identified application became abandoned for failure to reply in a timely manner to the non-final Office action mailed July 26, 2002, which set a shortened statutory period for reply of three (3) months. No extensions of time under the provisions of 37 CFR 1.136(a) were obtained. Accordingly, the above-identified application became abandoned after midnight October 26, 2002.

In response to the non-final Office action, petitioner submitted with the instant petition $650 for the petition to revive fee, and an amendment.

Since the requirements for a grantable petition have been met, the petition is **GRANTED**.

The application file is being forwarded to Technology Center 3600, for further review of the amendment filed with the instant petition.

Telephone inquiries concerning this decision should be directed to Andrea Smith at (703) 308-6711.

Andrea Smith
Petitions Examiner
Office of Petitions
Office of the Deputy Commissioner
for Patent Examination Policy

OIPE JC14
OCT 2 0 2003
PATENT & TRADEMARK OFFICE

Pet Sec.

PATENTS
RECEIVED
OCT 2 4 2003
TC 1700

IN THE UNITED STATES PATENT AND TRADEMARK OFFICE

In re application of:)

TIMOTHY J. ANDERSON)

Serial No: 09/974,249)

Filed: October 9, 2001)

For: COMBUSTIBLE BRIQUETTE

REQUEST FOR WITHDRAWAL AS ATTORNEY OR AGENT AND CHANGE OF CORRESPONDENCE ADDRESS

Commissioner for Patents
P.O. Box 1450
Alexandria, VA 22313-1450

Approved
Jacqueline M. Stone, Director
Technology Center 1700
JUL - 2 2004

Sir:

Please withdraw me as attorney or agent for the above-identified patent application, and

☒ all the attorneys/agents of record

☐ the attorneys/agents (with registration numbers) listed on the attached paper(s), or

☐ the attorneys/agents associated with Customer Number _____.

The reason for this request is that Applicant and the attorneys are no longer able to effectively communicate.

CORRESPONDENCE ADDRESS

1. ☐ The correspondence address is NOT affected by this withdrawal.
2. ☒ Change the correspondence address and direct all future correspondence to:

Timothy J. Anderson
Envirotek Industries, LLC
1462 Pegaso Street
Encinitas, CA 92024

ATLANTA 374768v1

Please acknowledge acceptance of this withdrawal, by communication with the undersigned.

Respectfully submitted,

Louis T. Isaf
Attorney for Applicant
Reg. No. 29,078

Date: October 18, 2003
Telephone: (404) 872-7000
Docket: E041 1011

Womble Carlyle Sandridge & Rice, PLLC
P.O. Box 7037
Atlanta, Georgia 30357-0037

UNITED STATES PATENT AND TRADEMARK OFFICE

COMMISSIONER FOR PATENTS
UNITED STATES PATENT AND TRADEMARK OFFICE
P.O. BOX 1450
ALEXANDRIA, VA 22313-1450
www.uspto.gov

MERCHANT & GOULD PC
P.O. BOX 2903
MINNEAPOLIS, MN 55402-0903

MAILED

Feb 23 2004

DIRECTOR'S OFFICE
TECHNOLOGY CENTER 3600

Paper No. 15

In re Application of
Philip Charles Shephard
Application No. 09/974,253
Filed: October 9, 2001
For: PIVOT MECHANISM

DECISION ON PETITION TO WITHDRAW THE HOLDING OF ABANDONMENT

This is a decision on the petition to withdraw the holding of abandonment filed on December 16, 2003.

The petition is **GRANTED** in view of the following evidence of timely filing :

☐ Postcard receipt being dated_____.

☒ USPTO return facsimile receipt dated July 30, 2003 which identifies the application by serial number and the type of Response that was filed on that date.

☐ Certificate of Mailing/Transmission signed on _____. and supported by a statement under 37 C.F.R. 1.8(b)(3).

☐ Hand Delivery Receipt of the specific documents submitted dated _____.

☐ Certificate of Transmission of CPA under 37 C.F.R. 1.6 filed on _____.

☐ Express Mail Receipt under 37 C.F.R. 1.10 dated _____.

This application is being forwarded to the Supervisory Legal Instruments Examiner for entry of the Request for Reexamination (RCE) filed with the petition, then to the examiner for prompt action on the response.

Randolph A. Reese

cps/1/6/04

Randolph A. Reese
Special Programs Examiner
Group 3600

UNITED STATES PATENT AND TRADEMARK OFFICE

COMMISSIONER FOR PATENTS
UNITED STATES PATENT AND TRADEMARK OFFICE
WASHINGTON, D.C. 20231
www.uspto.gov

Paper No. 6

Michael P. Dilworth
CROMPTON CORPORATION
Benson Road
Middlebury, CT 06749

COPY MAILED
JUL 25 2002
OFFICE OF PETITIONS

In re Application of :
Kenrick M. Lewis, et al. :
Application No. 09/974,266 : ON PETITION
Filed: October 9, 2001 :
Attorney Docket No. 0052-OS :

This is a decision on the petition under 37 CFR 1.137(b), filed June 27, 2002, to revive the above-identified application.

The petition is **GRANTED**.

The above-identified application became abandoned for failure to reply in a timely manner to the Notice To File Missing Parts Of Non-Provisional Application mailed November 9, 2001. The Notice set a period for reply of two(2) months from the mail date of the Notice. No extensions of time under the provisions of 37 CFR 1.136(a) were obtained. Accordingly, the above-identified application became abandoned on January 10, 2002.

Receipt is acknowledged of the Supplemental Information Disclosure Statement filed June 27, 2002.

Telephone inquiries concerning this decision should be directed to Cheryl Gibson-Baylor at (703)308-5111, or in her absence, Sherry Brinkley at (703)305-9220.

The application file is being forwarded to Office of Initial Patent Examination for further processing.

Cheryl Gibson Baylor

Cheryl Gibson-Baylor
Petitions Examiner
Office of Petitions
Office of the Deputy Commissioner
for Patent Examination Policy

Sherry Brinkley

Sherry Brinkley
Petitions Examiner

UNITED STATES PATENT AND TRADEMARK OFFICE

Commissioner for Patents
United States Patent and Trademark Office
P.O. Box 1450
Alexandria, VA 22313-1450
www.uspto.gov

GEAM - SILICONES - 60SI
IP LEGAL
ONE PLASTICS AVENUE
PITTSFIELD MA 01201-3697

COPY MAILED

MAY 3 1 2005

OFFICE OF PETITIONS

In re Application of :
Lewis, et al. :
Application No. 09/974,266 : ON PETITION
Filed: October 9, 2001 :
Attorney Docket No. 1302-22 :
For: ROCHOW-MULLER DIRECT SYNTHESIS USING NANOSIZED COPPER CATALYST PRECURSORS

This is a decision on the petition under 37 CFR 1.137(b), filed on March 7, 2005 (certificate of mailing date March 3, 2005), to revive the above-identified application.

The above-identified application became abandoned for failure to reply in a timely manner to the July 16, 2003 non-final Office action which set an extendable three (3) month period for reply. No extensions of time having been obtained pursuant to 37 CFR 1.136(a) and no reply being received in the Office, this application became abandoned on October 17, 2003. A Notice of Abandonment was mailed on March 10, 2004.

Applicants have submitted an amendment in reply to the July 16, 2003 non-final Office action, the petition fee, and an acceptable statement of the unintentional nature of the delay in responding to the July 16, 2003 non-final Office action.

The statement of unintentional delay was not signed by a person who would have been in a position of knowing that the delay in filing a timely response was unintentional. Further, the statement of unintentional delay does not comply with the provisions of 37 CFR 1.137(b)(3). Nevertheless, the statement presented will be accepted and construed as meaning that "the entire delay in filing the required reply from the due date for the reply until the filing of a grantable petition to pursuant to 37 CFR 1.137(b), was unintentional." If this is an incorrect interpretation in view of the new rules, petitioner is required to provide a statement to that effect. In the event that petitioner has no knowledge that the delay was in fact unintentional, petitioner should make a reasonable inquiry to ascertain that, in fact, the delay was unintentional. If petitioner discovers that the delay was intentional, petitioner must so notify the Office. A courtesy copy of this decision is being mailed to petitioner. However, any future correspondence regarding this application will be mailed to the address of record.

The petition is **GRANTED**.

After the mailing of this decision the application will be forwarded to Technology Center 1621's technical support staff for entry of the amendment filed on March 7, 2005 (certificate of mailing date March 3, 2005).

Telephone inquiries pertaining to this decision may be directed to the undersigned at (571) 272-3230.

E. Shirene Willis

E. Shirene Willis
Senior Petitions Attorney
Office of Petitions

cc: ADRIAN T. CALDERONE
DILWORTH & BARRESE, LLP
333 EARLE OVINGTON BLVD.
UNIONDALE, NY 11553

UNITED STATES PATENT AND TRADEMARK OFFICE

Commissioner for Patents
United States Patent and Trademark Office
P.O. Box 1450
Alexandria, VA 22313-1450
www.uspto.gov

PRICE HENEVELD COOPER DEWITT & LITTON
695 KENMOOR, S.E., P.O. BOX 2567
GRAND RAPIDS, MI 49501

COPY MAILED

DEC 2 9 2004

OFFICE OF PETITIONS

ON PETITION

In re Application of :
Thomas M. Kurth et al :
Application No. 09/974,301 :
Filed: October 10, 2001 :
Attorney Docket No. URE02 P-305 :

This is a decision on the petition under 37 CFR 1.313(c), filed December 23, 2004, which is being treated under 37 CFR 1.313(c)(2) to withdraw the above-identified application from issue after payment of the issue fee.

The petition is **GRANTED**.

The above-identified application is withdrawn from issue for consideration of a submission under 37 CFR 1.114 (request for continued examination). See 37 CFR 1.313(c)(2).

Petitioner is advised that the issue fee paid on November 18, 2004 in the above-identified application cannot be refunded. If, however, the above-identified application is again allowed, petitioner may request that it be applied towards the issue fee required by the new Notice of Allowance.[1]

Telephone inquiries should be directed to Wan Laymon at (571) 272-3220.

Appropriate action will be taken on the petition under 37 CFR 1.78(a)(3) and 1.78(a)(6) for acceptance of an unintentionally delayed claim for the benefit of priority to the prior-filed applications noted in the amendment filed September 14, 2004 and in the concurrently filed amendment. Afterwards, this matter is being referred to Technology Center AU 1733 for processing of the RCE and for appropriate consideration of applicants' entitlement to claim the benefit of priority to the prior-filed applications.

Wan Laymon
Petitions Examiner
Office of Petitions
Office of the Deputy Commissioner
for Patent Examination Policy

---

[1] The request to apply the issue fee to the new Notice may be satisfied by completing and returning the new Issue Fee Transmittal Form PTOL-85(b), which includes the following language thereon: "Commissioner for Patents is requested to apply the Issue Fee and Publication Fee (if any) or re-apply any previously paid issue fee to the application identified above." Petitioner is advised that, whether a fee is indicated as being due or not, the Issue Fee Transmittal Form must be completed and timely submitted to avoid abandonment. Note the language in bold text on the first page of the Notice of Allowance and Fee(s) Due (PTOL-85).

UNITED STATES PATENT AND TRADEMARK OFFICE

Commissioner for Patents
United States Patent and Trademark Office
P.O. Box 1450
Alexandria, VA 22313-1450
www.uspto.gov

PRICE HENEVELD COOPER DEWITT & LITTON, LLP
695 KENMOOR, S.E.
PO BOX 2567
GRAND RAPIDS, MI 49501

COPY MAILED

MAR 0 8 2005

OFFICE OF PETITIONS

In re Application of	:	
Thomas M. Kurth et al.	:	GRANT OF PETITION
Application No. 09/974,301	:	UNDER 37 CFR 1.78(a)(3)
Filed: October 10, 2001	:	AND 37 CFR 1.78(a)(6)
Attorney Docket No. URE02 P-305	:	

This is a decision on the petition under 37 CFR 1.78(a)(3) and 37 CFR 1.78(a)(6), filed September 14, 2004, and supplemented December 23, 2004, to accept an unintentionally delayed claim for priority based on the prior-filed applications set forth in the concurrently filed amendment.

The petition is **granted**.

Facts:

The application, as filed on October 10, 2001, claimed priority to application no. 09/944,212, but failed to list the relationship between the applications. The instant application is a continuation-in-part of application no. 09/944,212.

The specification correctly listed the instant application as claiming priority based on provisional application no. 60/239,161.

The specification correctly listed application no. 09/944,212, as claiming priority to provisional application nos. 60/251,068, 60/239,161, and 60/230,463.

Unfortunately, the specification did not include a claim or priority based on 60/251,068. In addition, the specification failed to claim priority based on the fact that the instant application is a continuation-in-part of 09/646,356 which is the national stage filing of International application no. PCT/US99/21511, which is a continuation-in-part of application no. 09/154,340.

A petition, amendment, and application-data-sheet, were filed on September 14, 2004.

Subsequently, petitioner noted that a portion of text has inadvertently been omitted from the amendment filed on September 14, 2004. As a result of this discovery, a supplement to the petition and new amendment were filed on December 23, 2004.

Law:

When an application is filed on or after November 29, 2000, benefit claims under 35 U.S.C. 119(e), 120, 121 and 365(c) must be made during the pendency of the application and within the later of four months from the actual filing date of the application or sixteen months from the filing date of the prior application. For the instant application, the above period of time ended on February 10, 2002. The priority claims at issue were not made by this date. However, petitioner has submitted a petition under 37 CFR 1.78(a)(3).

37 CFR 1.78(a)(3) and 37 CFR 1.78(a)(6) allow the filing of late priority claims if certain requirements are satisfied.

The petition under 37 CFR 1.78(a)(3) and 1.78(a)(6) must be accompanied by:
(1) the reference required by 35 USC 120 and 119(e) and 37 CFR 1.78 to the prior-filed applications, unless previously submitted;
(2) the surcharge set forth in 37 CFR 1.17(t); and
(3) a statement that the entire delay between the date the claims were due under 37 CFR 1.78 and the date the claims were filed was unintentional. The Commissioner may require additional information if there is a question whether the delay was unintentional.

Petitioner has satisfied the above requirements for relief under 37 CFR 1.78(a)(3) and 1.78(a)(6).

The granting of this petition is not a determination that petitioner is actually entitled to the benefit of the filing date of the prior-filed applications, but is only a determination that the Office will allow petitioner to file an untimely claim for priority. The examiner will, in due course, consider any priority claims and determine the extent to which the application is entitled to an earlier filing date.

A corrected Filing Receipt, which includes the priority claims, accompanies this decision on petition.

The amount of a fee is determined at the time the fee is paid in full. The surcharge due on September 14, 2004, was $1,330. However, petitioner submitted $1,300 and did not authorize the Office to charge deficiencies to a deposit account. The papers filed with the supplement to the petition on December 23, 2004, include authorization to charge fee deficiencies to petitioner's deposit account. On December 23, 2004, the surcharge set forth in 37 CFR 1.17(t) was $1,370. Therefore, $70 will be charged to petitioner's deposit account.

Once this decision is mailed, the examiner will be informed the petition has been granted. **In due course, the examiner will consider the priority claims and determine the extent to which the application is entitled to an earlier filing date based on the prior-filed applications.**

Telephone inquiries regarding the contents of this decision may be directed to Petitions Attorney Steven Brantley at (571) 272-3203.

Frances Hicks

Frances Hicks
Petitions Examiner
Office of Petitions

Attached: Corrected Filing Receipt

UNITED STATES PATENT AND TRADEMARK OFFICE

Commissioner for Patents
United States Patent and Trademark Office
P.O. Box 1450
Alexandria, VA 22313-1450
www.uspto.gov

PRICE HENEVELD COOPER DEWITT & LITTON, LLP
695 KENMOOR, S.E.
P O BOX 2567
GRAND RAPIDS MI 49501

COPY MAILED

SEP 1 6 2004

OFFICE OF PETITIONS

In re Application of	:
Kurth, et al.	:
Application No. 09/974,302	: DECISION ON PETITION
Filed: October 10, 2001	: UNDER 37 CFR 1.78(a)(3)
Attorney Docket No. URE02-P-313	:

This is a decision on the petition under 37 CFR 1.78(a)(3), filed July 14, 2004, to accept an unintentionally delayed claim under 35 U.S.C. § 120 for the benefit of priority to the prior-filed nonprovisional and PCT applications set forth in the amendment filed concurrently with the instant petition.

The petition is **GRANTED**.

A petition for acceptance of a claim for late priority under 37 CFR 1.78(a)(3) is only applicable to those applications filed on or after November 29, 2000. Further, the petition is appropriate only after the expiration of the period specified in 37 CFR 1.78(a)(2)(ii). In addition, the petition under 37 CFR 1.78(a)(3) must be accompanied by:

(1) the reference required by 35 U.S.C. § 120 and 37 CFR 1.78(a)(2)(i) of the prior-filed application, unless previously submitted;

(2) the surcharge set forth in § 1.17(t);[1] and

(3) a statement that the entire delay between the date the claim was due under 37 CFR 1.78(a)(2)(ii) and the date the claim was filed was unintentional. The Commissioner may require additional information where there is a question whether the delay was unintentional.

The instant pending application was filed on October 10, 2001 and was pending at the time of filing of the instant petition. A reference to the prior-filed nonprovisional and PCT applications has been included in an amendment to the first sentence of the specification following the title, as

[1] Petitioners paid only $1,300.00 towards the $1,330.00 petition fee. Accordingly, deposit account no. 16-2463 will be charged the $30.00 balance due.

required by 37 CFR 1.78(a)(2)(iii).

The instant nonprovisional application was filed after November 29, 2000, and the claim herein for the benefit of priority to the prior-filed nonprovisional and PCT applications is submitted after expiration of the period specified in 37 CFR 1.78(a)(2)(ii). Also, the reference to the prior-filed nonprovisional and PCT applications was submitted during the pendency of the instant nonprovisional application, for which the claim for benefit of priority is sought. *See* 35 U.S.C. § 120. Accordingly, having found that the instant petition for acceptance of an unintentionally delayed claim for the benefit of priority under 35 U.S.C. § 120 to the prior-filed nonprovisional and PCT applications satisfies the conditions of 37 CFR 1.78(a)(3), the petition is granted.

A corrected Filing Receipt, which includes the priority claim to the prior-filed nonprovisional applications, was mailed on August 16, 2004.

The granting of the petition to accept the delayed benefit claim to the prior-filed applications under 37 CFR 1.78(a)(3) should not be construed as meaning that the instant application is entitled to the benefit of the prior-filed applications. In order for the instant application to be entitled to the benefit of the prior-filed applications, all other requirements under 35 U.S.C. § 120 and 37 CFR 1.78(a)(1) and (a)(2) must be met. Similarly, the fact that the corrected Filing Receipt, mailed on August 16, 2004, includes the prior-filed applications should not be construed as meaning that applicant is entitled to the claim for benefit of priority to the prior-filed applications noted thereon. Accordingly, the examiner will, in due course, consider this benefit claim and determine whether the instant application is entitled to the benefit of the earlier filing date.

Any inquiries concerning this decision may be directed to Senior Petitions Attorney E. Shirene Willis at (703) 308-6712.

This application is being forwarded to Technology Center Art Unit 1771 for appropriate action on the amendment filed July 14, 2004, including consideration by the examiner of applicant's entitlement to claim benefit of priority under 35 U.S.C. § 120 to the prior-filed nonprovisional and PCT applications.

Charles Pearson
Director, Office of Petitions
Office of Petitions
Office of the Deputy Commissioner
for Patent Examination Policy

UNITED STATES PATENT AND TRADEMARK OFFICE

Commissioner for Patents
United States Patent and Trademark Office
P.O. Box 1450
Alexandria, VA 22313-1450
www.uspto.gov

DAVID J LEVY, CORPORATE INTELLECTUAL PROPERTY
GLAXOSMITHKLINE
FIVE MOORE DR., PO BOX 13398
RESEARCH TRIANGLE PARK, NC 27709-3398

COPY MAILED

MAY 0 5 2004

OFFICE OF PETITIONS

In re Application of	:	
Stolle, et al.	:	
Application No. 09/974,319	:	ON PETITION
Filed: October 9, 2001	:	
Attorney Docket No. PX4794US2	:	

This is a decision on the petition under 37 C.F.R. § 1.137(b), filed March 16, 2004, to revive the above-identified application.

The petition is **dismissed.**

Any request for reconsideration of this decision must be submitted within TWO (2) MONTHS from the mail date of this decision. Extensions of time under 37 CFR 1.136(a) are permitted. The reconsideration request should include a cover letter entitled "Renewed Petition under 37 CFR 1.137(b)."

This application became abandoned for failure to timely pay the issue fee on or before March 9, 2004. Accordingly, this application became abandoned on March 10, 2004.

Effective December 1, 1997, the provisions of 37 CFR 1.137(b) now provide that where the delay in reply was unintentional, a petition may be filed to revive an abandoned application pursuant to 37 CFR 1.137(b). A grantable petition pursuant to 37 CFR 1.137(b) must be accompanied by:

> (1) the required reply, unless previously filed. In a nonprovisional application abandoned for failure to prosecute, the required reply may be met by the filing of a continuing application. In an application, abandoned or lapsed for failure to pay the issue fee or any portion thereof, the required reply must be the payment of the issue fee or any outstanding balance thereof.

(2) the petition fee as set forth in 37 CFR 1.17(m);

(3) a statement that the **entire** delay in filing the required reply from the due date for the reply until the filing of a grantable petition pursuant to 37 CFR 1.137(b) was unintentional. The Commissioner may require additional information where there is a question whether the delay was unintentional; and

(4) any terminal disclaimer (and fee set forth in 37 CFR 1.20(d)) required pursuant to 37 CFR 1.137(d).

The instant petition does not satisfy requirement (2) above.

The required $1330.00 petition fee has not been submitted. As such, the petition must be dismissed.

Further correspondence with respect to this matter should be addressed as follows:

By mail: Mail Stop Petition
Commissioner for Patents
Box 1450
Alexandria, VA 22313

By FAX: (703) 872-9306
Attn: Office of Petitions

By hand: Customer Service Window
2011 South Clark Place
Crystal Plaza Two (left side entrance of building)
Arlington, VA

Telephone inquiries should be directed to the undersigned at (703) 306-9200.

Edward J. Tannouse
Petitions Attorney
Office of Petitions
United States Patent and Trademark Office

UNITED STATES PATENT AND TRADEMARK OFFICE

IPM | RHB

Commissioner for Patents
United States Patent and Trademark Office
P.O. Box 1450
Alexandria, VA 22313-1450
www.uspto.gov

DAVID J LEVY, CORPORATE INTELLECTUAL PROPERTY
GLAXOSMITHKLINE
FIVE MOORE DR., PO BOX 13398
RESEARCH TRIANGLE PARK, NC 27709-3398

COPY MAILED

MAY 0 5 2004

OFFICE OF PETITIONS

In re Application of :
Stolle, et.al. :
Application No. 09/974,319 :
Filed: October 9, 2001 :
Attorney Docket No. PX4794US2 :

ON PETITION

This is a decision on the petition under 37 C.F.R. § 1.137(b), filed March 16, 2004, to revive the above-identified application.

The petition is **dismissed**.

Any request for reconsideration of this decision must be submitted within TWO (2) MONTHS from the mail date of this decision. Extensions of time under 37 CFR 1.136(a) are permitted. The reconsideration request should include a cover letter entitled "Renewed Petition under 37 CFR 1.137(b)."

This application became abandoned for failure to timely pay the issue fee on or before March 9, 2004. Accordingly, this application became abandoned on March 10, 2004.

Effective December 1, 1997, the provisions of 37 CFR 1.137(b) now provide that where the delay in reply was unintentional, a petition may be filed to revive an abandoned application pursuant to 37 CFR 1.137(b). A grantable petition pursuant to 37 CFR 1.137(b) must be accompanied by:

(1) the required reply, unless previously filed. In a nonprovisional application abandoned for failure to prosecute, the required reply may be met by the filing of a continuing application. In an application, abandoned or lapsed for failure to pay the issue fee or any portion thereof, the required reply must be the payment of the issue fee or any outstanding balance thereof.

DOCKETED

Docket No: PX4794US2
Attorney: RHB
Paper: Request Reconsideration
Due Date: 05 July 2004
Deadline: 05 Nov 2004
Recorded:

RECEIVED
MAY 1 0 2004
GLOBAL INTELLECTUAL PROPERTY

(2) the petition fee as set forth in 37 CFR 1.17(m);

(3) a statement that the **entire** delay in filing the required reply from the due date for the reply until the filing of a grantable petition pursuant to 37 CFR 1.137(b) was unintentional. The Commissioner may require additional information where there is a question whether the delay was unintentional; and

(4) any terminal disclaimer (and fee set forth in 37 CFR 1.20(d)) required pursuant to 37 CFR 1.137(d).

The instant petition does not satisfy requirement (2) above.

The required $1330.00 petition fee has not been submitted. As such, the petition must be dismissed.

Further correspondence with respect to this matter should be addressed as follows:

By mail: Mail Stop Petition
Commissioner for Patents
Box 1450
Alexandria, VA 22313

By FAX: (703) 872-9306
Attn: Office of Petitions

By hand: Customer Service Window
2011 South Clark Place
Crystal Plaza Two (left side entrance of building)
Arlington, VA

Telephone inquiries should be directed to the undersigned at (703) 306-9200.

Edward J. Tannouse
Petitions Attorney
Office of Petitions
United States Patent and Trademark Office

UNITED STATES PATENT AND TRADEMARK OFFICE

COMMISSIONER FOR PATENTS
UNITED STATES PATENT AND TRADEMARK OFFICE
WASHINGTON, D.C. 20231
www.uspto.gov

Paper No. 3

FISH & NEAVE
1251 AVENUE OF THE AMERICAS
50TH FLOOR
NEW YORK NY 10020-1105

COPY MAILED

JUL 23 2002

OFFICE OF PETITIONS

In re Application of:
Ellis, *et al.*
Application No. 09/974,345
Filed: October 9, 2001
Attorney Docket Number: UV/218

ON PETITION

This is a decision on the November 15, 2001 petition under 37 C.F.R. §1.182 for entry of substitute drawings.

On January 3, 2002, the Office of Initial Patent Examination issued a letter to Petitioner stating that the November 15, 2001 drawing submission was accepted and that it would be included for patent publication.

Accordingly, *this petition is* ***dismissed*** *as moot.*

Any request for reconsideration of this decision must be submitted within TWO (2) MONTHS from the mail date of this decision. Extensions of time under 37 C.F.R. §1.136(a) are permitted. The reconsideration request should include a cover letter entitled "Renewed Petition under 37 C.F.R. §1.182".

Further correspondence with respect to this matter should be addressed as follows:

By mail: Assistant Commissioner for Patents
Box DAC
Washington, D.C. 20231

By FAX: (703) 308-6916
Attn: Office of Petitions

By hand: Office of Petitions
Four Crystal Plaza, Suite 3C23
2201 South Clark Place
Arlington, VA 22202

Telephone inquiries concerning this matter may be directed to Petitions Attorney Scott M. Ledford in the Office of Petitions at (703) 306-5593.

Beverly Flanagan
Supervisory Petitions Examiner
Office of Petitions
Office of the Deputy Assistant Commissioner
for Patent Examination Policy

OIPE JC11
SEP 2 0 2002
PATENT & TRADEMARK OFFICE

DAC

PATENTS
UV-218

IN THE UNITED STATES PATENT AND TRADEMARK OFFICE

Patent Application

Applicant	:	Michael D. Ellis, et al.
Application No.	:	09/974,345 Confirmation No. 3627
Filed	:	October 9, 2001
For	:	SYSTEMS AND METHODS FOR BUILDING USER MEDIA LISTS
Examiner	:	Andrew Faile
Group Art No.	:	2611

RECEIVED
SEP 2 3 2002
OFFICE OF PETITIONS

Assistant Commissioner
for Patents
Washington, D.C. 20231

New York, New York 10020
September 17, 2002

Attention: BOX DAC

NO FURTHER ACTION FOR
PETITION DECISION UNDER 37 C.F.R. § 1.182
FOR ENTRY OF THE DRAWINGS

Sir:

Pursuant to your dismissal of the referenced petition on the basis of mootness, Applicant will take no further action.

Drawing submissions were accepted by the Office of Initial Patent Examination on January 3, 2002, thereby providing the action requested in the petition.

Respectfully submitted,

Sheila F. McShane
Reg. No. 44,928
Attorney for Applicants
FISH & NEAVE
1251 Avenue of the Americas
New York, New York 10020-1104
Tel.: (212) 596-9000

I Hereby Certify that this Correspondence is being Deposited with the U.S. Postal Service as First Class Mail in an Envelope Addressed to: COMMISSIONER FOR PATENTS P.O. BOX 2327 ARLINGTON, VA 22202 on September 17, 2002

Carol J. Smith-Von Goodman

Signature of Person Signing

UNITED STATES PATENT AND TRADEMARK OFFICE

COMMISSIONER FOR PATENTS
UNITED STATES PATENT AND TRADEMARK OFFICE
P.O. BOX 1450
ALEXANDRIA, VA 22313-1450
www.uspto.gov

Paper No. 10

CALFEE HALTER & GRISWOLD, LLP
800 SUPERIOR AVENUE
SUITE 1400
CLEVELAND OH 44114

COPY MAILED

DEC 22 2003

OFFICE OF PETITIONS

In re Application of
JAMES H. MOLNAR
Application No. 09/974,348
Filed: October 10, 2001
Attorney Docket No. 12873/04232

DECISION GRANTING PETITION
UNDER 37 CFR 1.137(b)

This is a decision on the petition, filed October 21, 2003, which is being treated as a petition under 37 CFR 1.137(b) to revive the instant nonprovisional application for failure to timely notify the U.S. Patent and Trademark (USPTO) of the filing of an application in a foreign country, or under a multinational treaty that requires publication of applications eighteen months after filing. *See* 37 CFR 1.137(f).

The petition is **GRANTED**.

Petitioner states that the present nonprovisional application is the subject of an application filed in an eighteen month publication country on September 20, 2002. However, the USPTO was unintentionally not notified of this filing within 45 days subsequent to the filing of the subject application in an eighteen month publication country.

In view of the above, this application became abandoned pursuant to 35 U.S.C. § 122(b)(2)(B)(iii) and 37 CFR 1.213(c) for failure to timely notify the Office of the filing of an application in a foreign country or under a multilateral international agreement that requires publication of applications 18 months after filing.

A petition to revive an application abandoned pursuant to 35 U.S.C. 122(b)(2)(B)(iii) for failure to notify the USPTO of a foreign filing must be accompanied by:

(1) the required reply which is met by the notification of such filing in a foreign country or under a multinational treaty;

(2) the petition fee as set forth in 37 CFR 1.17(m); and,

(3) a statement that the entire delay in filing the required reply from the due date of the reply until the filing of a grantable petition was unintentional.

The present petition has been found to be in compliance with 37 CFR 1.137(b). Accordingly, the failure to timely notify the USPTO of a foreign or international filing within 45 days after the date of filing of such foreign or international application as provided by 35 U.S.C. § 122(b)(2)(B)(iii) and 37 CFR 1.213(c) is accepted as having been unintentionally delayed.

The previous Request and Certification under 35 U.S.C. § 122(b)(2)(B)(i) has been rescinded. A Notice Regarding Rescission of Nonpublication Request which sets forth the projected publication date of April 4, 2004, accompanies this decision on petition.

The $1,330.00 petition fee will be charged to Deposit Account No. 03-0172, as authorized.

This application is being forwarded to Technology Center Art Unit 3618.

Any inquiries concerning this decision may be directed to the undersigned at (703) 306-5589.

Christina Tartera Donnell

Christina Tartera Donnell
Senior Petitions Attorney
Office of Petitions

Enclosure: Communication Regarding Rescission of Nonpublication Request and/or Notice of Foreign Filing

UNITED STATES PATENT AND TRADEMARK OFFICE

Commissioner for Patents
United States Patent and Trademark Office
P.O. Box 1450
Alexandria, VA 22313-1450
www.uspto.gov

CALFEE HALTER & GRISWOLD LLP
800 SUPERIOR AVENUE – SUITE 1400
CLEVELAND, OH 44114

COPY MAILED

DEC 20 2004

OFFICE OF PETITIONS

ON PETITION

In re Application of :
James H. Molnar :
Application No. 09/974,348 :
Filed: October 10, 2001 :
Attorney Docket No. 12873/04232

This is a decision on the petition, filed December 13, 2004, under 37 CFR 1.313(c)(2) to withdraw the above-identified application from issue after payment of the issue fee.

The petition is **GRANTED**.

The above-identified application is withdrawn from issue for consideration of a submission under 37 CFR 1.114 (request for continued examination). See 37 CFR 1.313(c)(2).

Petitioner is advised that the issue fee paid on June 3, 2004 in the above-identified application cannot be refunded. If, however, the above-identified application is again allowed, petitioner may request that it be applied towards the issue fee required by the new Notice of Allowance.[1]

Telephone inquiries should be directed to Irvin Dingle at (571) 272-3210.

This matter will be forwarded to Technology Center AU 3618 for processing of the request for continued examination under 37 CFR 1.114 and for consideration of the concurrently filed Information Disclosure Statement.

Irvin Dingle
Petitions Examiner
Office of Petitions
Office of the Deputy Commissioner
for Patent Examination Policy

---

[1] The request to apply the issue fee to the new Notice may be satisfied by completing and returning the new Issue Fee Transmittal Form PTOL-85(b), which includes the following language thereon: Commissioner for Patents is requested to apply the Issue Fee and Publication Fee (if any) or re-apply any previously paid issue fee to the application identified above. Petitioner is advised that, whether a fee is indicated as being due or not, the Issue Fee Transmittal Form **must** be completed and timely submitted to avoid abandonment. Note the language in bold text on the first page of the Notice of Allowance and Fee(s) Due (PTOL-85).

UNITED STATES PATENT AND TRADEMARK OFFICE

Commissioner for Patents
United States Patent and Trademark Office
P.O. Box 1450
Alexandria, VA 22313-1450
www.uspto.gov

Paper No. 10

DENTSPLY INTERNATIONAL INC
570 WEST COLLEGE AVENUE
YORK, PA 17404

COPY MAILED

JUL 1 8 2005

OFFICE OF PETITIONS

In re Application of :
Ingrid Elaine Hohlfelder et al :
Application No. 09/974,361 : ON PETITION
Filed: October 10, 2001 :
Attorney Docket No. MID-38 ABC :

This is a decision on the petition under 37 CFR 1.137(b), filed May 31, 2005, to revive the above-identified application.

The petition is **GRANTED**.

The above-identified application became abandoned for failure to reply in a timely manner to the Notice to File Missing Parts of Nonprovisional Application (Notice) mailed October 30, 2001. The Notice set a period for reply of two (2) months from the mail date of the Notice. No extensions of time under the provisions of 37 CFR 1.136(a) were obtained. Accordingly, the above-identified application became abandoned on December 31, 2001.

Pursuant to petitioner's authorization, Deposit Account No. 04-0780 was charged $1,500.00 for the petition to revive an unintentionally abandoned application.

Telephone inquiries concerning this decision should be directed to Wan Laymon at (571) 272-3220.

The application file is being forwarded to the Office of Initial Patent Examination.

Wan Laymon
Wan Laymon
Petitions Examiner
Office of Petitions
Office of the Deputy Commissioner
for Patent Examination Policy

UNITED STATES PATENT AND TRADEMARK OFFICE

Commissioner for Patents
United States Patent and Trademark Office
P.O. Box 1450
Alexandria, VA 22313-1450
www.uspto.gov

MERCHANT & GOULD P.C.
P.O. BOX 2903
MINNEAPOLIS MN 55402-0903

COPY MAILED

JAN 04 2010

In re Patent No. 7,045,812	:	
Issue Date: May 16, 2006	:	
Application No. 09/974,420	:	NOTICE
Filed: October 9, 2001	:	
Attorney Docket No. 13183.1US01	:	

This is a notice regarding your request for acceptance of a fee deficiency submission under 37 CFR 1.28. On September 1, 1998, the Court of Appeals for the Federal Circuit held that 37 CFR 1.28(c) is the sole provision governing the time for correction of the erroneous payment of the issue fee as a small entity. **See DH Technology v. Synergystex International, Inc. 154 F.3d 1333, 47 USPQ2d 1865 (Fed. Cir. Sept. 1, 1998).**

The Office no longer investigates or rejects original or reissue applications under 37 CFR 1.56. **1098 Off. Gaz. Pat. Office 502 (January 3, 1989)**. Therefore, nothing in this Notice is intended to imply that an investigation was done.

Your fee deficiency submission under 37 CFR 1.28 is hereby **ACCEPTED**.

This patent is no longer entitled to small entity status. Accordingly, all future fees paid in this patent must be paid at the large entity rate.

Liana Walsh
Petitions Examiner
Office of Petitions

UNITED STATES PATENT AND TRADEMARK OFFICE

Commissioner for Patents
United States Patent and Trademark Office
Washington, D.C. 20231
www.uspto.gov
DIW 03-02

Paper No. 5

JILL L. WOODBURN
THE LAW OFFICE OF JILL L. WOODBURN, L.L.C.
6633 OLD STONEHOUSE DR.
NEWBURGH IN 47630

COPY MAILED

APR 0 4 2002

OFFICE OF PETITIONS

In re Application of	:	
Bhullar et al.	:	
Application No. 09/974,434	:	DECISION GRANTING PETITION
Filed: 9 October, 2001	:	
Atty Docket No. RDID 0081 US	:	

This is a decision on the petition filed on 8 January, 2002, which is treated as a petition requesting that the above-identified application be accorded a filing date of 9 October, 2001, with eight (8) sheets of drawings as a part of the original disclosure.

On 9 October, 2001, the application was filed.

On 13 November, 2001, Initial Patent Examination Division mailed a "Notice of Incomplete Application" stating that the application had not been accorded a filing date because the application was deposited without drawings and that the filing date of the application would be the date of receipt of the drawings.

In response, on 8 January, 2002, the present petition, a $130.00 petition fee, and eight (8) sheets of drawings were filed. Petitioner argues that eight (8) sheets of drawings were filed with the other application papers on 9 October, 2001, and that the drawings were misplaced in the U.S. Patent and Trademark Office (Office). In support of the petition, a copy of petitioner's postcard receipt was supplied with the petition. The postcard receipt, which shows an Office stamp of 9 October, 2001, and the above-identified application number, acknowledges receipt of, *inter alia*, drawings (8 pp). Petitioner requests that the application, including eight (8) sheets of drawings, be accorded a filing date of 9 October, 2001.

Upon review of the record, no sheets of drawings deposited on 9 October, 2001, have been located among the application papers. However, the evidence is convincing that the application papers deposited on 9 October, 2001, included eight (8) sheets of drawings, which were subsequently misplaced in the USPTO. Therefore, the application, including eight (8) sheets of drawings, was complete on filing and entitled to a filing date of 9 October, 2001.

In view of the above, the petition is granted. The eight (8) sheets of drawings submitted with the petition will be used for processing and examination purposes. The petition fee is unnecessary and will be credited to counsel's deposit account, No. 02-2958.

The "Notice" mailed on 13 November, 2001, was sent in error and is hereby withdrawn.

The application is being returned to Initial Patent Examination Division for processing with a filing date of 9 October, 2001, using the application papers filed on that date, and the eight (8) sheets of drawings supplied on 8 January, 2002, and for an indication on the bib-data sheet that eight (8) sheets of drawings were present on filing.

Telephone inquiries specific to this matter should be directed to Petitions Attorney Douglas I. Wood at 703 308-6918.

Beverly M. Flanagan
Supervisory Petitions Examiner
Office of Petitions
Office of the Deputy Commissioner
for Patent Examination Policy

UNITED STATES PATENT AND TRADEMARK OFFICE

Commissioner for Patents
United States Patent and Trademark Office
P.O. Box 1450
Alexandria, VA 22313-1450
www.uspto.gov

DENNIS MOORE
TEXAS INSTRUMENTS INCORPORATED
M/S 3999
P.O. BOX 655474
DALLAS, TX 75265

COPY MAILED

JAN 0 6 2005

OFFICE OF PETITIONS

In re Application of	:	
Main et al.	:	
Application No. 09/974,435	:	ON PETITION
Filed: October 9, 2001	:	
Attorney Docket No. TI-32279	:	

This is a decision on the petition under 37 C.F.R. § 1.137(b), filed December 3, 2004, to revive the above-identified application.

The petition is **GRANTED.**

This application became abandoned for failure to timely reply to the final Office action mailed May 6, 2004. No extensions of time under the provisions of 37 CFR 1.136(a) were obtained. Accordingly, this application became abandoned on August 7, 2004.

Petitioner has met the requirements to revive the above-identified application pursuant to 37 CFR 1.137(b).

This matter is being referred to Technology Center 2600 for processing of the Request for Continued Examination under 37 CFR 1.114 filed with the instant petition.

Telephone inquiries regarding this decision should be directed to the undersigned at (571) 272-3282.

Liana Chase
Petitions Examiner
Office of Petitions
Office of the Deputy Commissioner
for Patent Examination Policy

UNITED STATES PATENT AND TRADEMARK OFFICE

8-7-07

Commissioner for Patents
United States Patent and Trademark Office
P.O. Box 1450
Alexandria, VA 22313-1450
www.uspto.gov

Patent No. : 6,844,515
Ser. No. : 09/974,445
Inventor(s) : Byrnes, et. al.
Issued : January 18, 2005
Title : METHOD AND APPARATUS FOR TURBINE BLADE MACHINING
Docket No. :

Re: Request for Certificate of Correction

Consideration has been given your request for the issuance of a certificate of correction for the above-identified patent under the provisions of Rule(s) 1.322 or 1.323.

Assignees' names and addresses (assignment data) printed in a patent, are based *solely* on information supplied in the appropriate space for identifying the assignment data, i.e., item 3 of the Issue Fee Transmittal Form PTOL-85B. Granting of a request under 37 CFR 3.81(b) is required to correct applicant's error providing ***incorrect or erroneous*** assignment data, *before* issuance of a Certificate of Correction, under 37 CFR 1.323 *(see Manual of Patent Examining Procedures (M.P.E.P) Chp.1400, sect. 1481).* This procedure is required *at any time after the issue fee is paid*, including after issuance of the patent.

In view of the foregoing, your request is hereby denied.

A request to correct the Assignee under 37 CFR 3.81(b) should include:

A. **the processing fee set forth in 37 CFR 1.117(h) (currently $130);**
B. a statement that the failure to include the correct assignee name on the PTOL-85B was inadvertent; and
C. a copy of the Notice of Recordation of Assignment Document, reflecting the reel and frame number where the assignment(s) is recorded and/or reflecting proof of *the date* the assignment was submitted for recordation.

In the Request, Applicant(s) may request that the file be forwarded to Certificates of Correction Branch, for issuance of a Certificate of Correction, if the Request is granted.

Any request under 37 CFR 3.81(b) should be directed to the following address or facsimile number:

By mail: Mail Stop PETITIONS
Commissioner for Patents
Post Office Box 1450
Alexandria, VA 22313-1450

By hand: Customer Service Window
Mail Stop Petitions
Randolph Building
401 Dulany Street
Alexandria, VA 22314

By fax: (703) 872-9306
ATTN: Office of Petitions

If a fee (currently $100) was previously submitted for consideration of a Request for Certificate of Correction, under CFR 1.323, to correct assignment data, , no additional fee is required.

A certificate of correction will issue to correct the remaining error noted in your request.

Eva James
For Cecelia Newman
Decisions & Certificates
of Correction Branch
(703) **308-9390 ext. 124** or 105

Robert B. Reeser, III
Armstrong Teasdale LLP
One Metropolitan Square
Suite 2600
St. Louis, Missouri, 63102-2740

ej

UNITED STATES PATENT AND TRADEMARK OFFICE

Commissioner for Patents
United States Patent and Trademark Office
P.O. Box 1450
Alexandria, VA 22313-1450
www.uspto.gov

C. RENEE CATO
BELLSOUTH INTELLECTUAL PROPERTY MANAGEMENT CORP.
1155 PEACHTREE STREET
SUITE 500
ATLANTA GA 30309

COPY MAILED

DEC 01 2006

OFFICE OF PETITIONS

In re Application of :
Shivanandan, et al. :
Application No. 09/974,502 :
Filed: October 9, 2001 :
Attorney Docket No. 36968/249319/ BLL-0031 :
For: SMALL BUSINESS SERVICE BUYING CLUB SSYTEMS AND METHODS

ON PETITION

This is a decision on the petition, filed August 23, 2006, under 37 CFR 1.137(b) to revive the above-identified application.

The above-identified application became abandoned for failure to timely submit a reply within three (3) months of the mailing of the October 7, 2005 non-final Office action. No response being received and no extensions of time being obtained, this application became abandoned on January 8, 2006. A Notice of Abandonment was mailed on April 20, 2006.

Applicants have submitted an amendment in reply to the October 7, 2005 non-final Office action, an acceptable statement of the unintentional nature of the delay in responding to the October 7, 2005 non-final Office action, and the petition fee.

The statement of unintentional delay was not signed by a person who would have been in a position of knowing that the delay in filing a timely response was unintentional. In the event that practitioner has no knowledge that the delay was in fact unintentional, practitioner should make a reasonable inquiry to ascertain that, in fact, the delay was unintentional. If practitioner discovers that the delay was intentional, practitioner must so notify the Office. A courtesy copy of this decision is being mailed to practitioner. However, any future correspondence regarding this application will be mailed to the address of record.

The petition is **GRANTED**.

After the mailing of this decision the application will be forwarded to Technology Center AU 3625 for consideration of the amendment filed on August 23, 2006.

Telephone inquiries should be directed to the undersigned at (571) 272-3230.

Shirene Willis Brantley

Shirene Willis Brantley
Senior Petitions Attorney
Office of Petitions
Office of the Deputy Commissioner
for Patent Examination Policy

CC: MARISA J. DUBUE
CANTOR COLBURN LLP
55 GRIFFIN ROAD SOUTH
BLOOMFIELD, CT 06002

UNITED STATES PATENT AND TRADEMARK OFFICE

Commissioner for Patents
United States Patent and Trademark Office
P.O. Box 1450
Alexandria, VA 22313-1450
www.uspto.gov

COPY MAILED

JUL 19 2007

OFFICE OF PETITIONS

CANTOR COLBURN LLP - BELLSOUTH
55 GRIFFIN ROAD SOUTH
BLOOMFIELD CT 06002

In re Application of
John Shivanandan et al.
Application No. 09/974,502
Filed: October 9, 2001
Attorney Docket No. **BLL-0031**

DECISION ACCORDING STATUS UNDER 37 CFR § 1.47(a)

This is in response to the petition filed June 29, 2007 under 37 CFR 1.47(a).

The petition under 37 CFR 1.47(a) is **GRANTED**.

The above-identified application was filed on October 9, 2001 without an executed oath or declaration, thus, a Notice to File Missing Parts was mailed November 15, 2001. In response to the Notice to File Missing Parts, an oath or declaration was filed June 4, 2002. However, it appears that the oath or declaration filed June 4, 2002 was defective in that although signed by joint inventors Shivanandan and Lopes, non-initialed and non-dated alterations were made to the sections of inventors Shivanandan and Lopes. Further, the oath or declaration filed June 4, 2002 did not include the signature of joint inventor Jeff Ezell.

The applicants were advised in a non-Final Office Action mailed October 7, 2005 that pursuant to 37 CFR 1.52(c), the oath or declaration filed June 4, 2002 was defective and required the filing of a new oath or declaration. As well, the Notice of Allowability noted that a Substitute Oath or Declaration to cure the defects in the Oath or Declaration filed June 4, 2002 was required. However, since a fully executed oath or declaration was never placed on the files for examination, the petition under 37 CFR 1.47(a) is appropriate rather than under 37 CFR 1.183.[1]

In response to the requests for a new or substitute oath or declaration, an oath or declaration signed by joint inventors Jeff Ezell and Jennifer J. Marzano is filed however in the absence of the signatures of joint inventors John Shivanandan and Brooke A.

---

[1]Once an application has received a fully executed oath or declaration and been placed on the files for examination, the provisions of 37 CFR 1.47 no longer apply. Rather, the remedy for treating an inventor's refusal to also sign a supplemental oath or declaration or to provide all information is a waiver of 37 CFR 1.67 and 1.63. See MPEP 603.

Lopes, applicants file the instant petition under 37 CFR 1.47(a). Applicants argue that joint inventor Shivanandan cannot be located and that joint inventor Lopes refuses to execute the oath or declaration.

A grantable petition under 37 CFR 1.47(a) requires: (1) proof that the non-signing inventor cannot be reached or refuses to sign the oath or declaration after having been presented with the application papers (specification, claims and drawings); (2) an acceptable oath or declaration in compliance with 35 U.S.C. §§ 115 and 116; (3) the petition fee; and (4) a statement of the last known address of the non-signing inventor.

The petition bears proof that the application papers were forwarded to and received by non signing inventor Brooke A. Lopes however she has not returned an executed copy of the oath or declaration. Additionally, the petition bears proof that while diligent efforts have been employed to locate non-signing inventor John Shivanandan, applicants have been unsuccessful in locating him.

The above-identified application and papers have been reviewed and found in compliance with 37 CFR 1.47(a). In view thereof, this application is hereby accorded Rule 1.47(a) status.

Thus, as provided in Rule 1.47c, this Office will forward notice of this application's filing to the non-signing inventors at the addresses given in the petition. Notice of the filing of this application will also be published in the Official Gazette.

This matter is being referred to the Publishing Division to be processed into a Patent.

Telephone inquiries concerning this matter may be directed to the undersigned Petitions Attorney at (571) 272-3212.

Patricia Faison-Ball

Patricia Faison-Ball
Senior Petitions Attorney
Office of Petitions

UNITED STATES PATENT AND TRADEMARK OFFICE

Commissioner for Patents
United States Patent and Trademark Office
P.O. Box 1450
Alexandria, VA 22313-1450
www.uspto.gov

CANTOR COLBURN LLP - BELLSOUTH
55 GRIFFIN ROAD SOUTH
BLOOMFIELD CT 06002

COPY MAILED

JUL 19 2007

OFFICE OF PETITIONS

In re Application of
John Shivanandan et al.
Application No. 09/974,502
Filed: October 9, 2001
Attorney Docket No. **BLL-0031**

DECISION ACCORDING STATUS UNDER 37 CFR § 1.47(a)

This is in response to the petition filed June 29, 2007 under 37 CFR 1.47(a).

The petition under 37 CFR 1.47(a) is **GRANTED**.

The above-identified application was filed on October 9, 2001 without an executed oath or declaration, thus, a Notice to File Missing Parts was mailed November 15, 2001. In response to the Notice to File Missing Parts, an oath or declaration was filed June 4, 2002. However, it appears that the oath or declaration filed June 4, 2002 was defective in that although signed by joint inventors Shivanandan and Lopes, non-initialed and non-dated alterations were made to the sections of inventors Shivanandan and Lopes. Further, the oath or declaration filed June 4, 2002 did not include the signature of joint inventor Jeff Ezell.

The applicants were advised in a non-Final Office Action mailed October 7, 2005 that pursuant to 37 CFR 1.52(c), the oath or declaration filed June 4, 2002 was defective and required the filing of a new oath or declaration. As well, the Notice of Allowability noted that a Substitute Oath or Declaration to cure the defects in the Oath or Declaration filed June 4, 2002 was required. However, since a fully executed oath or declaration was never placed on the files for examination, the petition under 37 CFR 1.47(a) is appropriate rather than under 37 CFR 1.183.[1]

In response to the requests for a new or substitute oath or declaration, an oath or declaration signed by joint inventors Jeff Ezell and Jennifer J. Marzano is filed however in the absence of the signatures of joint inventors John Shivanandan and Brooke A.

[1]Once an application has received a fully executed oath or declaration and been placed on the files for examination, the provisions of 37 CFR 1.47 no longer apply. Rather, the remedy for treating an inventor's refusal to also sign a supplemental oath or declaration or to provide all information is a waiver of 37 CFR 1.67 and 1.63. See MPEP 603.

Lopes, applicants file the instant petition under 37 CFR 1.47(a). Applicants argue that joint inventor Shivanandan cannot be located and that joint inventor Lopes refuses to execute the oath or declaration.

A grantable petition under 37 CFR 1.47(a) requires: (1) proof that the non-signing inventor cannot be reached or refuses to sign the oath or declaration after having been presented with the application papers (specification, claims and drawings); (2) an acceptable oath or declaration in compliance with 35 U.S.C. §§ 115 and 116; (3) the petition fee; and (4) a statement of the last known address of the non-signing inventor.

The petition bears proof that the application papers were forwarded to and received by non signing inventor Brooke A. Lopes however she has not returned an executed copy of the oath or declaration. Additionally, the petition bears proof that while diligent efforts have been employed to locate non-signing inventor John Shivanandan, applicants have been unsuccessful in locating him.

The above-identified application and papers have been reviewed and found in compliance with 37 CFR 1.47(a). In view thereof, this application is hereby accorded Rule 1.47(a) status.

Thus, as provided in Rule 1.47c, this Office will forward notice of this application's filing to the non-signing inventors at the addresses given in the petition. Notice of the filing of this application will also be published in the Official Gazette.

This matter is being referred to the Publishing Division to be processed into a Patent.

Telephone inquiries concerning this matter may be directed to the undersigned Petitions Attorney at (571) 272-3212.

Patricia Faison-Ball

Patricia Faison-Ball
Senior Petitions Attorney
Office of Petitions

UNITED STATES PATENT AND TRADEMARK OFFICE

COMMISSIONER FOR PATENTS
UNITED STATES PATENT AND TRADEMARK OFFICE
P.O. BOX 1450
ALEXANDRIA, VA 22313-1450
www.uspto.gov

Michael P. Dilworth
CROMPTON CORPORATION
Benson Road
Middlebury, CT 06749

COPY MAILED

MAR 18 2005

OFFICE OF PETITIONS

In re Application of :
Lewis, et al. : DECISION ON PETITION
Application No. 09/974,503 :
Filed: October 9, 2001 :
Atty. Dkt. No.: 0066-OS :

This decision is in response to the petition under 37 CFR 1.137(b), filed February 18, 2005.

The petition under 37 CFR 1.137(b) is **GRANTED**.

This application became abandoned January 10, 2004 for failure to timely submit a proper reply to the final Office action mailed October 9, 2003. The final Office action set a three month shortened statutory period of time for reply. No petition for extension of time under 37 CFR 1.136(a) was timely filed. Notice of Abandonment was mailed May 19, 2004.

A grantable petition under 37 CFR 1.137(b) must be accompanied by: (1) the required reply; (2) the petition fee as set forth in 37 CFR 1.17(m); (3) a statement that the entire delay in filing the required reply from the due date of the reply until the filing of a grantable petition was unintentional. The Commissioner may require additional information where there is a question whether the delay was unintentional; and (4) any terminal disclaimer (and fee as set forth in 37 CFR 1.20(d)) required pursuant to paragraph (d) of this section.

The instant petition has been reviewed and found in compliance with the provisions of 37 CFR 1.137(b). Accordingly, the failure to timely submit a proper reply to the final Office action mailed October 9, 2003 is accepted as having been unintentionally delayed.

The Notice of Appeal filed February 18, 2005 has been entered and made of record. Accordingly, the two (2) month period for filing the appeal brief in compliance with 37 CFR 1.192 runs from the mail date of this decision.

It is not apparent whether the person signing the statement of unintentional delay was in a position to have firsthand or direct knowledge of the facts and circumstances of the delay at issue. Nevertheless, such statement is being treated as having been made as the result of a reasonable inquiry into the facts and circumstances of such delay. See 37 CFR 10.18(b) and Changes to Patent Practice and Procedure; Final Rule Notice, 62 Fed. Reg. 53131, 53178 (October 10, 1997), 1203 Off. Gaz. Pat. Office 63, 103 (October 21, 1997). In the event that such an inquiry has not been made, petitioner must make such an inquiry. If such inquiry results in the discovery that it is not correct that the entire delay in filing the required reply from the due date for the reply until the filing of a grantable petition pursuant to 37 CFR 1.137(b) was unintentional, petitioner must notify the Office.

There is no indication that petitioner herein was ever empowered to prosecute the instant application. An associate power of attorney was received April 21, 2004, however, it has not been entered into the record as it has not been executed by one who's authority to act on behalf of assignee has been established. Thus, if petitioner desires to receive future correspondence regarding this application, the appropriate power of attorney documentation must be submitted. A courtesy copy of this decision will be mailed to petitioner. However, all future correspondence will be directed to the address of record until such time as appropriate instructions are received to the contrary.

This application file is being forwarded to Technology Center 1700 for processing.

Telephone inquiries related to this decision may be directed to the undersigned at (571) 272-3205.

Alesia M. Brown
Petitions Attorney
Office of Petitions

CC: HANH T. PHAM
GEAM SILICONES 60SI
ONE PLASTICES AVE.
PITTSFIELD, MA 01201

UNITED STATES PATENT AND TRADEMARK OFFICE

Commissioner for Patents
United States Patent and Trademark Office
P.O. Box 1450
Alexandria, VA 22313-1450
www.uspto.gov
DIW 01-05

Paper No. 18

FAY KAPLUN & MARCIN, LLP
150 BROADWAY, SUITE 702
NEW YORK NY 10038

COPY MAILED

JAN 11 2005

OFFICE OF PETITIONS

In re Application of	:	
Donald Tremblay	:	
Application No. 09/974,513	:	ON PETITION
Filed: 11 October, 2001	:	
Att'y Docket No. 4012801601	:	

This is a decision on the petition under 1.137(b),[1] filed on 3 December, 2004, to revive the above-identified application.

The petition is **GRANTED**.

---

[1]Effective December 1, 1997, the provisions of 37 CFR 1.137(b) now provide that where the delay in reply was unintentional, a petition may be filed to revive an abandoned application or a lapsed patent pursuant to 37 CFR 1.137(b). A grantable petition filed under the provisions of 37 CFR 1.137(b) must be accompanied by:

(1) the required reply, unless previously filed. In a nonprovisional application abandoned for failure to prosecute, the required reply may be met by the filing of a continuing application. In a nonprovisional application filed on or after June 8, 1995, and abandoned for failure to prosecute, the required reply may also be met by the filing of a request for continued examination in compliance with § 1.114. In an application or patent, abandoned or lapsed for failure to pay the issue fee or any portion thereof, the required reply must be the payment of the issue fee or any outstanding balance thereof. In an application abandoned for failure to pay the publication fee, the required reply must include payment of the publication fee.

(2) the petition fee as set forth in 37 CFR 1.17(m);

(3) a statement that the entire delay in filing the required reply from the due date for the reply until the filing of a grantable petition pursuant to 37 CFR 1.137(b) was unintentional. The Commissioner may required additional information where there is a question whether the delay was unintentional; and

(4) any terminal disclaimer (and fee as set forth in 37 CFR 1.20(d)) required pursuant to 37 CFR 1.137(c)).

This application became abandoned on 16 March, 2003, for failure to properly reply to the final Office action mailed on 15 November, 2002, which set a three (3) month shortened statutory period for reply. A one (1) month extension of time was obtained on 19 March, 2003. Petitioner filed an amendment after final rejection on 24 January, 2003, and again on 19 March, 2003. Both amendments were found not to place the application in condition for allowance, however, and Advisory Actions were mailed on 11 February, 2003, and 2 April, 2003, respectively. Notice of Abandonment was mailed on 10 September, 2003.

Petitioner has filed a Request for Continued Examination (RCE) and an amendment and Information Disclosure Statement (IDS) as the reply required under 37 CFR 1.114.

It is not apparent whether the person signing the statement of unintentional delay was in a position to have firsthand or direct knowledge of the facts and circumstances of the delay at issue. Nevertheless, such statement is being treated as having been made as the result of a reasonable inquiry into the facts and circumstances of such delay.[2] In the event that such an inquiry has not been made, petitioner must make such an inquiry. If such inquiry results in the discovery that it is not correct that the entire delay in filing the required reply from the due date for the reply until the filing of a grantable petition pursuant to 37 CFR 1.137(b) was unintentional, petitioner must notify the Office.

Receipt of the Power of Attorney and Change of Correspondence Address Filed on 3 December, 2004, is acknowledged.

Petitioner's request for a Corrected Filing Receipt is acknowledged. In view of the showing of a typographical error, the name of the inventor has been corrected in Office records. A Corrected Filing Receipt is enclosed for petitioner's records.

The application file is being forwarded to Technology Center 3700 for further processing.

---

[2] See 37 CFR 10.18(b) and Changes to Patent Practice and Procedure; Final Rule Notice, 62 Fed. Reg. 53131, 53178 (October 10, 1997), 1208 Off. Gaz. Pat. Office 63, 103 (October 21, 1997).

Telephone inquiries concerning this matter may be directed to the undersigned at (571)272-3231.

D Wood

Douglas I. Wood
Senior Petitions Attorney
Office of Petitions

Encl: Corrected Filing Receipt

UNITED STATES PATENT AND TRADEMARK OFFICE

COMMISSIONER FOR PATENTS
UNITED STATES PATENT AND TRADEMARK OFFICE
P.O. BOX 1450
ALEXANDRIA, VA 22313-1450
www.uspto.gov

GAMBURD LAW GROUP LLC
600 WEST JACKSON BLVD.
SUITE 625
CHICAGO IL 60661

COPY MAILED

JAN 22 2007

OFFICE OF PETITIONS

In re Application of
Hirschsohn
Application No. 09/974,521
Filed: October 9, 2001
Docket No.: 021202-000200US

: DECISION ON PETITION

This is a decision on the petition under 37 C.F.R. § 1.137(b), filed September 24, 2006, to revive the above-identified application.

The petition is **GRANTED**.

This application became abandoned for failure to timely reply to the non-final Office action mailed January 26, 2005. The non-final Office action set a three (3) month shortened statutory period of time for reply. No extensions of time in accordance with 37 C.F.R. § 1.136 were timely requested. Notice of Abandonment was mailed August 7, 2006.

A grantable petition pursuant to 37 C.F.R. § 1.137(b) must be accompanied by: (1) the required reply to the outstanding Office action or notice, unless previously filed; (2) the petition fee as set forth in 37 C.F.R. § 1.17(m); (3) a statement that the entire delay in filing the required reply from the due date for the reply until the filing of a grantable petition pursuant to 37 C.F.R. § 1.137(b) was unintentional; and (4) any terminal disclaimer (and fee set forth in 37 C.F.R. § 1.20(d)) required pursuant to 37 C.F.R. § 1.137(c).

The instant petition has been reviewed and found in compliance with the provisions of 37 C.F.R. § 1.137(b). Accordingly, the failure to timely submit a proper reply to the non-final Office action is accepted as having been unintentionally delayed.

This application is being forwarded to Technology Center 2100 for further processing.

Telephone inquiries concerning this matter may be directed to the undersigned at (571) 272-3205.

Alesia M. Brown
Petitions Attorney
Office of Petitions

UNITED STATES PATENT AND TRADEMARK OFFICE

COMMISSIONER FOR PATENTS
UNITED STATES PATENT AND TRADEMARK OFFICE
WASHINGTON, D.C. 20231
www.uspto.gov

Paper No. 10

Carol M. LaSalle
BOZICEVIC, FIELD & FRANCIS, LLP
Suite 200
200 Middlefield Road
Menlo Park CA 94025

COPY MAILED

JUL 23 2002

OFFICE OF PETITIONS

In re Application of
Kermani, et al.
Application No. 09/974,597
Filed: October 10, 2001
Attorney Docket No. LIFE-029
FOR: DETERMINATION OF SAMPLE VOLUME ADEQUACY IN BIOSENSOR DEVICES

DECISION GRANTING PETITION

This is a decision on the petition filed April 4, 2002 to accord a filing date of October 10, 2001 to the above-identified application. The petition will be treated under 37 CFR 1.53(e).

The application was deposited on October 10, 2001. However, on November 9, 2001, the Office of Initial Patent Examination mailed a "Notice of Incomplete Nonprovisional Application" requiring drawings of applicants' invention and stating that the filing date would be the date of receipt of the omitted drawings. It is noted that the specification filed on October 10, 2001 describes drawing figures, but no drawing figures were filed on October 10, 2001.

As stated in MPEP 601.01(f), it is the practice of the United States Patent and Trademark Office (PTO) to treat an application that contains at least one process or method claim as an application for which a drawing is not necessary for an understanding of the invention under 35 USC 113 (first sentence.)

MPEP 601.01(f) also states that:

> A non provisional application having at least one claim, or a provisional application having at least some disclosure, directed to the subject matter discussed above for which a drawing is usually not considered essential for a filing date, describing drawing figures in the specification, but filed without all of the drawing figures referred to in the specification as discussed in MPEP 601.01(g), so long as the application contains something that can be construed as a written description.

This application contains method claims. Therefore, the application should have been treated as an application filed without all of the drawing figures referred to in the specification as discussed in MPEP 601.01(g).

MPEP 601.01(g) states that if an application is filed without all of the drawing figures referred to in the specification, a "Notice of Omitted Items" is mailed indicating that the application has been accorded a filing date, but is lacking some of the figures of drawings described in the specification.

In view of the above, the "Notice" mailed November 9, 2001, insofar as it pertains to the statement that the application was not entitled to a filing date, was mailed in error and is hereby withdrawn.

The application is entitled to a filing date of October 10, 2001. The petition is granted.

Petitioners request that drawings figures 1-8 be accorded an October 10, 2001 filing date. Either the drawings were present in the Office on the filing date of the application or they was not. If they were not present on the filing date, they cannot be considered a part of the original disclosure of the application. Applicants do not allege in the petition that drawing figures 1-8 were present in the Office on October 10, 2001, and a review of the file confirms that drawing figures 1-8 were not present on October 10, 2001. Therefore, the application cannot be accorded an October 10, 2001 filing date with the drawings of Figures 1-8 as part of the original disclosure. The issue of new matter is one appropriately addressed during prosecution of the application after the filing date of the application has been determined.

Petitioners must submit a preliminary amendment requesting that the examiner of record consider the proposed drawings of Figures 1-8 for sufficiency of illustration and new matter. See MPEP 608.02.

No petition fee has been or will be charged in connection with the filing date matter. A $130.00 surcharge for filing a late declaration will be charged to deposit account no. 50-0815.

The application is being returned to the Office of Initial Patent Examination for further processing with a filing date of October 10, 2001 and for indication in PTO records that "0" sheets of drawings were present on filing.

Thereafter, the application will be forwarded to Technology Center 1700 for examination in due course.

Telephone inquiries specific to this matter should be directed to the undersigned at (703) 308-6712.

E. Shirene Willis

E. Shirene Willis
Senior Petitions Attorney
Office of Petitions
Office of the Deputy Commissioner
for Patent Examination Policy

UNITED STATES PATENT AND TRADEMARK OFFICE

Commissioner for Patents
United States Patent and Trademark Office
P.O. Box 1450
Alexandria, VA 22313-1450
www.uspto.gov

ROPES & GRAY LLP
PATENT DOCKETING 39/361
1211 AVENUE OF THE AMERICAS
NEW YORK, NY 10036-8704

COPY MAILED

MAY 29 2009

OFFICE OF PETITIONS

In re Application of	:	
William L. Thomas, et al.	:	
Application No. 09/974,646	:	DECISION GRANTING PETITION
Filed: October 9, 2001	:	UNDER 37 CFR 1.313(c)(2)
Attorney Docket No. UV-212	:	

This is a decision on the petition under 37 CFR 1.313(c)(2), filed May 27, 2009, to withdraw the above-identified application from issue after payment of the issue fee.

The petition is **GRANTED**.

The above-identified application is withdrawn from issue for consideration of a submission under 37 CFR 1.114 (request for continued examination). *See* 37 CFR 1.313(c)(2).

Petitioner is advised that the issue fee paid on August 28, 2008 cannot be refunded. If, however, this application is again allowed, petitioner may request that it be applied towards the issue fee required by the new Notice of Allowance.[1]

Telephone inquiries regarding this decision should be directed to undersigned at (571) 272-1642. All other inquiries concerning the examination or status of this application should be directed to the Technology Center.

This application is being referred to Technology Center AU 2421 for processing of the request for continued examination under 37 CFR 1.114 and for consideration of the concurrently filed information disclosure statement.

/AMW/
April M, Wise
Petitions Examiner
Office of Petitions

---

[1] *The request to apply the issue fee to the new Notice may be satisfied by completing and returning the new Part B – Fee(s) Transmittal Form (along with any balance due at the time of submission). Petitioner is advised that the Issue Fee Transmittal Form must be completed and timely submitted to avoid abandonment of the application.*

UNITED STATES PATENT AND TRADEMARK OFFICE

UNITED STATES DEPARTMENT OF COMMERCE
United States Patent and Trademark Office
Address: COMMISSIONER FOR PATENTS
P.O. Box 1450
Alexandria, Virginia 22313-1450
www.uspto.gov

ROPES & GRAY LLP
PATENT DOCKETING 39/361
1211 AVENUE OF THE AMERICAS
NEW YORK, NY 10036-8704

Mail Date: 04/21/2010

Applicant	: William L. Thomas	: DECISION ON REQUEST FOR
Patent Number	: 7650621	: RECALCULATION of PATENT
Issue Date	: 01/19/2010	: TERM ADJUSTMENT IN VIEW
Appliction No	: 09/974,646	: OF WYETH AND NOTICE OF INTENT TO
Filed	: 10/09/2001	: ISSUE CERTIFICATE OF CORRECTION
		:

The Request for Recalculation is **GRANTED** to the extent indicated.

The patent term adjustment has been determined to be **2180** days. The USPTO will *sua sponte* issue a certificate of correction reflecting the amount of PTA days determined by the recalculation.

Prior to the issuance of the certificate of correction, the USPTO will afford patentee an opportunity to be heard and request reconsideration. Accordingly, patentee has **one month or thirty (30) days**, whichever is longer, to file a request for reconsideration of this patent term adjustment calculation. See 35 U.S.C. 154(b)(3)(B)(ii) and 37 CFR 1.322(a)(4). No extensions of time will be granted under 37 CFR 1.136.

Patentee should use document code PET.OP if electronically filing a request for reconsideration of this patent term adjustment calculation. The patentee must also include the information required by 37 CFR 1.705(b)(2) and the fee required by 37 CFR 1.18(e). If patentee does not file a timely request for reconsideration of this patent term adjustment calculation including the information required by 37 CFR 1.705(b)(2) and the fee required by 37 CFR 1.18(e), the USPTO will issue a certificate of correction reflecting the PTA determination noted above.

Patentee should be aware that in order to preserve the right to review in the United States District Court for the District of Columbia of the USPTO patent term adjustment determination, patentee must ensure that he or she also take the steps required under 35 U.S.C. 154(b)(4)(A) in a timely manner. Nothing in the request for recalculation should be construed as providing an alternative time frame for commencing a civil action under 35 U.S.C. 154(b)(4)(A).

Any questions concerning this decision should be directed to the Office of Patent Legal Administration at 571-272-7702.

UNITED STATES PATENT AND TRADEMARK OFFICE

Commissioner for Patents
United States Patent and Trademark Office
P.O. Box 1450
Alexandria, VA 22313-1450
www.uspto.gov

COPY MAILED

JAN 26 2007

OFFICE OF PETITIONS

MORGAN LEWIS & BOCKIUS LLP
1111 PENNSYLVANIA AVENUE NW
WASHINGTON DC 20004

In re Application of	:	
Kazuo Tsubouchi et al	:	
Application No. 09/974,679	:	ON PETITION
Filed: October 11, 2001	:	
Attorney Docket No. 054825-5001	:	

This is a decision on the petition, filed January 26, 2007, under 37 CFR 1.313(c)(2) to withdraw the above-identified application from issue after payment of the issue fee.

The petition is **GRANTED**.

The above-identified application is withdrawn from issue for consideration of a submission under 37 CFR 1.114 (request for continued examination). See 37 CFR 1.313(c)(2).

Petitioner is advised that the issue fee paid on December 29, 2006 in the above-identified application cannot be refunded. If, however, the above-identified application is again allowed, petitioner may request that it be applied towards the issue fee required by the new Notice of Allowance.[1]

Telephone inquiries should be directed to the undersigned at (571) 272-3208.

The examiner of Technology Center AU 2616 will consider the request for continued examination under 37 CFR 1.114.

Karen Creasy
Petitions Examiner
Office of Petitions

---

[1] The request to apply the issue fee to the new Notice may be satisfied by completing and returning the new Issue Fee Transmittal Form PTOL-85(b), which includes the following language thereon: "Commissioner for Patents is requested to apply the Issue Fee and Publication Fee (if any) or re-apply any previously paid issue fee to the application identified above." Petitioner is advised that, whether a fee is indicated as being due or not, the Issue Fee Transmittal Form **must** be completed and timely submitted to avoid abandonment. Note the language in bold text on the first page of the Notice of Allowance and Fee(s) Due (PTOL-85).

UNITED STATES PATENT AND TRADEMARK OFFICE

Commissioner for Patents
United States Patent and Trademark Office
P.O. Box 1450
Alexandria, VA 22313-1450
www.uspto.gov

Honeywell International Inc.
Law Department, Patent Services
101 Columbia Road
Morristown NJ 07962

COPY MAILED

JUN 3 0 2004

OFFICE OF PETITIONS

In re Application of
Rohrbach et al.
Application No. 09/974,694
Filed: October 10, 2001

Attorney Docket Number: H0001541
Title of Invention: Filter Apparatus For Removing Sulfur-Containing Compounds From Liquid Fuels, And Methods Of Using Same

DECISION GRANTING PETITION

This is a decision on the "Request For Corrected Filing Receipt" filed on April 8, 2004 which is being treated as a petition under 37 CFR 1.10 (c) , requesting that the above-identified application be accorded a filing date of October 10, 2001, rather than the presently accorded filing date of October 11, 2001.

Petitioner contends the application was deposited in Express Mail service on October 10, 2001. In support, petitioner supplied a copy of Express Mail receipt No. ET 753588891US (the same Express Mail number found on the itemized transmittal sheet accompanying the original application papers located in the official file). A review of the United States Postal Service's Express Mail Label shows the Express Mail package was accepted by the United States Postal Service on October 10, 2001.

In view of the above, the petition is **Granted**.

There is no indication that the person signing the present petition was ever given a power of attorney or authorization of agent to prosecute the above-identified application. If the person signing the present petition desires to receive future correspondence regarding this application, the appropriate power of attorney or authorization of agent must be submitted

The application is being forwarded to Office of Initial Patent Examination for correction of the filing date to **October 10, 2001** and issuance of a corrected Filing Receipt.

Telephone inquiries specific to this matter should be directed to the undersigned at (703) 306-0251.

Charlema R. Grant

Charlema R. Grant
Petitions Attorney
Office of Petitions

UNITED STATES PATENT AND TRADEMARK OFFICE

DEC 18

COMMISSIONER FOR PATENTS
UNITED STATES PATENT AND TRADEMARK OFFICE
P.O. BOX 1450
ALEXANDRIA, VA 22313-1450
www.uspto.gov

Albert W. Watkins
30844 NE 1st Avenue
St. Joseph, MN 56374

Paper No. 12

In re Application of Helena B. Halverson Serial No. : 09/974,714 Filed : October 9, 2001 For : Dimensional Dining Restaurant Management System	: DECISION ON PETITION : TO WITHDRAW : HOLDING OF : ABANDONMENT

This is a decision on petitioner's request received November 24, 2003 (a first copy submitted via facsimile transmission September 12, 2003 has not yet reached the instant file) to review the holding of abandonment mailed September 9, 2003 for failure to respond to file a Brief. There is no fee required for this petition.

In support of the request, petitioner has submitted a copy of a Brief, a copy of a one-month extension of time request, and a copy of a PTO stamped post card receipt dated May 14, 2003 (certificate of mailing dated May 10, 2003). It is noted that the communication of May 14, 2003 did not include the proper Serial Number. However, the communication included sufficient additional information that should have resulted in the matching of the papers with the correct file.

In view of the above, the Notice of Abandonment mailed September 9, 2003 is in error and is hereby vacated. The holding of abandonment is withdrawn. Upon the mailing of this decision, the application will be forwarded to the Examiner via the Legal Instruments Examiner for entry and consideration of the response filed May 14, 2003.

Summary: Holding of Abandonment Withdrawn.

John E. Kittle, Director
Groups 3730 and 3760
Phone: (703) 308-0873

ak/12/13/03

SPE RESPONSE FOR CERTIFICATE OF CORRECTION

Paper No.: _____

DATE : ~~3/6/06~~ 4/10/06

TO SPE OF : ART UNIT 1621

SUBJECT : Request for Certificate of Correction for Appl. No.: 9/974716 Patent No. 6828450 B2

Please respond to this request for a certificate of correction within 7 days.

Please review the requested changes/corrections as shown in the **COCIN** document(s) in the IFW application image. No new matter should be introduced, nor should the scope or meaning of the claims be changed.

Please complete the response (see below) and forward the completed response to scanning using document code **COCX**.

Virginia Tolbert
Certificates of Correction Branch

703-308-9390 ext. 113

Thank You For Your Assistance

The request for issuing the above-identified correction(s) is hereby:
Note your decision on the appropriate box.

- [X] **Approved** — **All** changes apply.
- [ ] **Approved in Part** — Specify below which changes **do not** apply.
- [ ] **Denied** — State the reasons for denial below.

Comments: _____

SPE

1624
Art Unit

PTOL-306 (REV. 7/03)

U.S. DEPARTMENT OF COMMERCE Patent and Trademark Office

UNITED STATES PATENT AND TRADEMARK OFFICE

Commissioner for Patents
United States Patent and Trademark Office
P.O. Box 1450
Alexandria, VA 22313-1450
www.uspto.gov

GREENLEE WINNER AND SULLIVAN, P. C.
4875 PEARL EAST CIRCLE
SUITE 200
BOULDER, CO 80301

COPY MAILED

NOV 1 5 2004

OFFICE OF PETITIONS

In re Application of :
Mark M. Goodman, et al. :
Application No. 09/974,729 :
Filed: October 9, 2001 :
Attorney Docket No. 70-01

NOTICE

This is a notice regarding your request for acceptance of a fee deficiency submission under 37 CFR 1.28. On September 1, 1998, the Court of Appeals for the Federal Circuit held that 37 CFR 1.28(c) is the sole provision governing the time for correction of the erroneous payment of the issue fee as a small entity. **See DH Technology v. Synergystex International, Inc. 154 F.3d 1333, 47 USPQ2d 1865 (Fed. Cir. Sept. 1, 1998).**

The Office no longer investigates or rejects original or reissue applications under 37 CFR 1.56. **1098 Off. Gaz. Pat. Office 502 (January 3, 1989).** Therefore, nothing in this Notice is intended to imply that an investigation was done.

The application file does not indicate a change of address has been filed in this case, although the address given on the petition differs from the address of record. A change of address should be filed in this case in accordance with MPEP 601.03. A courtesy copy of this decision is being mailed to the address noted on the petition. However, until otherwise instructed, all future correspondence regarding this application will be mailed solely to the address of record.

Your fee deficiency submission under 37 CFR 1.28 is hereby **ACCEPTED**.

Inquiries related to this communication should be directed to the Office of Petitions Staff at (571) 272-3201.

This file is being forwarded to Publishing Division for further processing.

Sherry D. Brinkley
Petitions Examiner
Office of Petitions
Office of the Deputy Commissioner
for Patent Examination Policy

cc: GREENLEE, WINNER AND SULLIVAN, P.C.
5370 Manhattan Circle, Suite 201
Boulder, CO 80303

UNITED STATES PATENT AND TRADEMARK OFFICE

Commissioner for Patents
United States Patent and Trademark Office
P.O. Box 1450
Alexandria, VA 22313-1450
www.uspto.gov

Paper No. 11

Richard M. Goldberg
25 East Salem Street
Suite 419
Hackensack, NJ 07601

COPY MAILED

NOV 03 2003

OFFICE OF PETITIONS

ON PETITION

In re Application of	:	
Joseph Ovadia	:	
Application No. 09/974,762	:	
Filed: October 9, 2001	:	
Attorney Docket No. 244/1/030	:	

This is a decision on the petition under 37 CFR 1.137(b), filed October 17, 2003, to revive the above-identified application.

The petition is granted.

The above-identified application became abandoned for failure to reply in a timely manner in reply to the Notice to File Missing Parts (Notice) mailed November 20, 2001, which set a shortened statutory period for reply of three months from the mail date of the Notice. No extensions of time under the provisions of 37 CFR 1.136 have been obtained. Accordingly, the application became abandoned on January 21, 2002.

The application file is being forwarded to the Office of Initial Patent Examination for further processing.

Telephone inquiries concerning this decision should be directed to Latrice Bond at (703) 308-6911.

Latrice Bond

Latrice Bond
Petitions Examiner
Office of Petitions
Office of the Deputy Commissioner
for Patent Examination Policy

UNITED STATES PATENT AND TRADEMARK OFFICE

Commissioner for Patents
United States Patent and Trademark Office
Washington, D.C. 20231
www.uspto.gov

Paper No. 5

Jacob Eisenberg
Siemens Schweiz
Albisriederstrasse 245
CH-8047 Zurich, Switzerland

COPY MAILED

JAN 2 8 2003

OFFICE OF PETITIONS

In re Application of :
McLintock et al. :
Application No. 09/974,776 :
Filed: October 11, 2001 :
Attorney Docket No. 2001P17847US :

ON PETITION

This is a decision on the petition under 37 CFR 1.137(b), filed January 14, 2003, to revive the above-identified application.

The petition is **GRANTED**.

The above-identified application became abandoned for failure to reply in a timely manner to the Notice to File Missing Parts of Application (Notice) mailed November 27, 2001. The Notice set a period for reply of two (2) months from the mail date of the Notice. No extensions of time under the provisions of 37 CFR 1.136(a) were obtained. Accordingly, the above-identified application became abandoned on January 27, 2002.

This application is being forwarded to the Office of Initial Patent Examination for further processing.

Telephone inquiries regarding this decision may be directed to the undersigned at (703) 308-6911.

Latrice Bond

Latrice Bond
Paralegal Specialist
Office of Petitions
Office of the Deputy Commissioner
for Patent Examination Policy

UNITED STATES PATENT AND TRADEMARK OFFICE

COMMISSIONER FOR PATENTS
UNITED STATES PATENT AND TRADEMARK OFFICE
P.O. BOX 1450
ALEXANDRIA, VA 22313-1450
www.uspto.gov

John J. Cunniff
Hahn Loeser + Parks LLP
One GOJO Plaza, Suite 300
Akron, OH 44311-1076

COPY MAILED
DEC 0 6 2004
OFFICE OF PETITIONS

In re Application of	:	
Max Schaldach, et al.	:	
Application No. 09/974,780	:	ON PETITION
Filed: October 9, 2004	:	
Attorney Docket No. 117163.00029	:	

This is a decision on the petition under 37 CFR 1.137(b), filed October 29, 2004, to revive the above-identified application.

The petition is **GRANTED**.

Telephone inquiries concerning this decision should be directed to the undersigned at (703) 306-3475.

The application file is being referred to Technology Center 3700 for processing the Request for Continued Examination under 37 CFR 1.114 filed with the instant petition.

Marianne E. Jenkins
Petitions Examiner
Office of Petitions
Office of the Deputy Commissioner
for Patent Examination Policy

UNITED STATES PATENT AND TRADEMARK OFFICE

Commissioner for Patents
United States Patent and Trademark Office
P.O. Box 1450
Alexandria, VA 22313-1450
www.uspto.gov

AUG 25 2004

ANN S. VIKSNINS
FISH & RICHARDSON P.C., P. A.
60 SOUTH SIXTH STREET
SUITE 3300
MINNEAPOLIS, MN 55402

In re Application of	:
Ellen M. Heath et al	:
Serial No.: 09/974,798	: PETITION DECISION
Filed: October 12, 2001	:
Attorney Docket No.: 17094-002001	:

This is in response to the petition under 37 CFR 1.181, filed on May 18, 2004 for withdrawal of Notice of abandonment of the above identified application based on failure to receive an Office action mailed on September 09, 2003.

A review of the file history shows that the examiner mailed a Non-Final office action on September 09, 2003, setting a three month shortened statutory period of reply. Upon failure to receive a reply to the Non-Final office action mailed on September 09, 2003, Office mailed a Notice of Abandonment to applicants on March 18, 2004.
On May 18, 2004, applicants filed the Petition to withdraw the abandonment along with the Docket reports showing that no Non-final office action was received in this application, and a declaration by Gray Oehlke, and copy of Revocation and New Power of Attorney, with change of Address.

In view of the evidence presented the Notice of Abandonment is withdrawn and the application is restored to pending status. **The application will be forwarded to the examiner for mailing of a new Office action.**

The petition is **GRANTED**.

Should there be any questions about this decision please contact Jean F. Vollano, by letter addressed to Director, TC 1600, at the address listed above, or by telephone at 571-272-0648 or by facsimile sent to the general Office facsimile number.

Bruce Kisliuk
Director, Technology Center 1600

UNITED STATES PATENT AND TRADEMARK OFFICE

COMMISSIONER FOR PATENTS
UNITED STATES PATENT AND TRADEMARK OFFICE
WASHINGTON, D.C. 20231
www.uspto.gov

Paper No. 6

YOUNG & THOMPSON
745 SOUTH 23RD STREET, 2ND FLOOR
ARLINGTON, VA 22202

COPY MAILED
JUL 15 2002
OFFICE OF PETITIONS

In re Application of	:
Thomas L. Brandt et al	:
Application No. 09/974,809	: DECISION GRANTING
Filed: October 12, 2001	:STATUS UNDER 37 CFR 1.47(a)
For: PROCESS AND APPARATUS FOR	:
DECORATING PACKAGES WITH	:
CONVEX SURFACES	

This is in response to the petition under 37 CFR 1.47(a), filed June 20, 2002.

The petition is granted.

Petitioner has shown that the non-signing inventor has refused to join in the filing of the above-identified application.

The above-identified application and papers have been reviewed and found in compliance with 37 CFR 1.47(a). This application is hereby accorded Rule 1.47(a) status. As provided in Rule 1.47(c), this Office will forward notice of this application's filing to the non-signing inventor at the address given in the petition. Notice of the filing of this application will also be published in the Official Gazette.

Telephone inquiries regarding this decision should be directed to Irvin Dingle at (703) 306-5684.

This application is being forwarded to the Initial Patent Examination Unit.

Frances Hicks
Lead Petitions Examiner
Office of Petitions
Office of the Deputy Commissioner
for Patent Examination Policy

7

UNITED STATES PATENT AND TRADEMARK OFFICE

COMMISSIONER FOR PATENTS
UNITED STATES PATENT AND TRADEMARK OFFICE
WASHINGTON, D.C. 20231
www.uspto.gov

NEAL D. TURNER
RD1, BOX 67C
BRACKNEY, PA 18812

COPY MAILED

JUL 15 2002

OFFICE OF PETITIONS

In re Application of
Thomas L. Brandt; Daniel N. Wilkens; Neal D. Turner; Harold N. Turner
Application No. 09/974,809
Filed: October 12, 2001
For: PROCESS AND APPARATUS FOR DECORATING PACKAGES WITH CONVEX SURFACES

Dear Mr. Turner:

You are named as a joint inventor in the above identified United States patent application, filed under the provisions of 35 U.S.C. 116 (United States Code), and 37 CFR 1.47(a), Rules of Practice in Patent Cases. Should a patent be granted on the application you will be designated therein as a joint inventor.

As a named inventor you are entitled to inspect any paper in the file wrapper of the application, order copies of all or any part thereof (at a prepaid cost per 37 CFR 1.19) or make your position of record in the application. Alternatively, you may arrange to do any of the preceding through a registered patent attorney or agent presenting written authorization from you. If you care to join in the application, counsel of record (see below) would presumably assist you. Joining in the application would entail the filing of an appropriate oath or declaration by you pursuant to 37 CFR 1.63.

Telephone inquiries regarding this communication should be directed to the Irvin Dingle at (703) 306-5684. Requests for information regarding your application should be directed to the File Information Unit at (703) 308-2733. Information regarding how to pay for and order a copy of the application, or a specific paper in the application, should be directed to Certification Division at (703) 308-9726 or 1 (800) 972-6382 (outside the Washington D.C. area).

Frances Hicks

Frances Hicks
Lead Petitions Examiner
Office of Petitions
Office of the Deputy Commissioner
for Patent Examination Policy

cc:

Young & Thompson
745 South 23rd Street, 2nd Floor
Arlington, VA 22202

UNITED STATES PATENT AND TRADEMARK OFFICE

Commissioner for Patents
United States Patent and Trademark Office
P.O. Box 1450
Alexandria, VA 22313-1450
www.uspto.gov

COPY MAILED

MAR 0 4 2008

OFFICE OF PETITIONS

Foley & Lardner LLP
Washington Harbour
3000 K Street NW Suite 500
Washington, DC 20007-5143

In re Application of
Hotta et al.
Application No. 09/974,878
Filed:October 12, 2001
Attorney Docket NO. 040302-0278

: DECISION DISMISSING PTA REQUEST

This decision is in response to applicants' APPLICATION FOR PATENT TERM ADJUSTMENT UNDER 37 CFR 1.705(b) filed on February 16, 2007 requesting that the Office adjust the PTA at the time of the mailing of the notice of allowance to at account for the time accrued for 1.702(b) and 1.703(b)

The instant application for patent term adjustment requests reconsideration of the patent term adjustment as it relates to the Office's failure to issue the patent within 3 years of the filing date, a decision is being **DISMISSED as the Office has issued the patent and calculated the amount of time the patentee accrued for the Office failure to issue the application within three years of the filing under 37 CFR 1.702(b).** See Patent Term Adjustment calculation included herein.

Applicants are reminded that if an application is entitled to an adjustment under 35 U.S.C. 154(b)(1)(B), the entire period during which the application (except for periods excluded under 35 U.S.C. 154(b)(1)(B)(i)-(iii)), and not just the period beginning three years after the actual filing date of the application, is the period of delay under 35 U.S.C. 154(b)(1)(B) in determining whether periods of delay overlap under 35 U.S.C. 154(b)(2)(A). Thus, any days of delay for Office issuance of the patent more than 3 years after the filing date of the application which overlap with the days of patent term adjustment accorded prior to the issuance of the patent will not result in any additional patent term adjustment. See 35 U.S.C. 154(b)(1)(B), 35 U.S.C. 154(b)(2)(A), and 37 CFR § 1.703(f). See also *Revision of Patent Term Extension and Patent Term Adjustment Provisions*; *Final Rule*, 69 Fed. Reg. 21704 (April 22, 2004).

Rather than file the request for reconsideration of Patent Term Adjustment at the time of the mailing of the notice of allowance, applicants are advised that they may wait until the time of the issuance of the patent and file a request for reconsideration of the patent term pursuant to 37 CFR 1.705(d). The USPTO notes that it does not calculate the amount of time earned pursuant to 37 CFR 1.702(b) until the time of the issuance of the patent and accordingly, the Office will consider any request for reconsideration of the patent term adjustment due to an error in the calculation of 37 CFR 1.702(b) to be timely if the request for reconsideration is filed within two months of the issuance of the patent.

The Office has assessed the $200.00 fee required of this request. No additional fees are required in considering this matter.

Any questions should be directed to Kery A. Fries, Senior Legal Advisor, at 571-272-7757.

Kery A Fries

Kery Fries
Senior Legal Advisor
Office of Patent Legal Administration
Office of Deputy Commissioner
for Patent Examination Policy

PALM INTRANET

Day : Saturday
Date: 2/2/2008
Time: 14:24:15

PTA Calculations for Application: 09/974878			
Application Filing Date:	10/12/2001	PTO Delay (PTO):	735
Issue Date of Patent:	10/17/2006	Three Years:	0
Pre-Issue Petitions:	0	Applicant Delay (APPL):	213
Post-Issue Petitions:	0	Total PTA (days):	522
PTO Delay Adjustment:	0		

File Contents History

Number	Date	Contents Description	PTO	APPL	START
78.5	09/27/2006	PTA 36 MONTHS	735		
78	10/17/2006	PATENT ISSUE DATE USED IN PTA CALCULATION			
77	09/18/2006	EXPORT TO FINAL DATA CAPTURE			
76	09/15/2006	FINISHED INITIAL DATA CAPTURE			
75	09/15/2006	DISPATCH TO FDC			
74	09/05/2006	APPLICATION IS CONSIDERED READY FOR ISSUE			
73	09/05/2006	WORKFLOW - QUERY REQUEST - FINISH			
72	08/07/2006	TC RETURN TO PUBS			
71	08/16/2006	ISSUE FEE PAYMENT VERIFIED			
70	08/16/2006	ISSUE FEE PAYMENT RECEIVED			
69	06/23/2006	PUBS CASE REMAND TO TC			
68	07/11/2006	WORKFLOW - QUERY REQUEST - BEGIN			
67	06/23/2006	MAIL MISCELLANEOUS COMMUNICATION TO APPLICANT			
66	06/22/2006	MISCELLANEOUS COMMUNICATION TO APPLICANT - NO ACTION COUNT			
65	06/02/2006	EXPORT TO INITIAL DATA CAPTURE			
64	05/25/2006	MAIL NOTICE OF ALLOWANCE			
63	05/25/2006	MAIL EXAMINER'S AMENDMENT			
62	05/24/2006	ISSUE REVISION COMPLETED			
61	05/24/2006	EXAMINER'S AMENDMENT COMMUNICATION			
60	05/24/2006	NOTICE OF ALLOWANCE DATA VERIFICATION COMPLETED			
59	05/24/2006	CASE DOCKETED TO EXAMINER IN GAU			
58	05/23/2006	NOTICE OF ALLOWABILITY			
57	05/09/2006	DATE FORWARDED TO EXAMINER			

56	05/01/2006	AMENDMENT AFTER FINAL REJECTION		28	54
55	05/01/2006	REQUEST FOR EXTENSION OF TIME - GRANTED			
54	01/03/2006	MAIL FINAL REJECTION (PTOL - 326)			
53	12/29/2005	FINAL REJECTION			
52	10/11/2005	DATE FORWARDED TO EXAMINER			
51	09/26/2005	RESPONSE AFTER NON-FINAL ACTION		2	49
50	06/27/2005	INFORMATION DISCLOSURE STATEMENT (IDS) FILED			
49	06/24/2005	MAIL NON-FINAL REJECTION			
48	06/24/2005	NON-FINAL REJECTION			
47	04/03/2005	DATE FORWARDED TO EXAMINER			
46	03/21/2005	RESPONSE AFTER NON-FINAL ACTION		60	44
45	03/21/2005	REQUEST FOR EXTENSION OF TIME - GRANTED			
44	10/20/2004	MAIL NON-FINAL REJECTION			
43	11/19/2003	REFERENCE CAPTURE ON IDS			
42	10/18/2004	NON-FINAL REJECTION			
41	08/11/2004	IFW TSS PROCESSING BY TECH CENTER COMPLETE			
40	10/12/2001	REFERENCE CAPTURE ON IDS			
39	08/11/2004	DATE FORWARDED TO EXAMINER			
38	08/03/2004	RESPONSE AFTER NON-FINAL ACTION			
37	08/03/2004	WORKFLOW INCOMING AMENDMENT IFW			
36	05/03/2004	MAIL NON-FINAL REJECTION			
35	05/03/2004	NON-FINAL REJECTION			
34	04/06/2004	DATE FORWARDED TO EXAMINER			
33	03/22/2004	AMENDMENT/ARGUMENT AFTER NOTICE OF APPEAL			
32	03/22/2004	REQUEST FOR EXTENSION OF TIME - GRANTED			
31	02/06/2004	MAIL ADVISORY ACTION (PTOL - 303)			
30	02/06/2004	ADVISORY ACTION (PTOL-303)			
29	01/29/2004	MAIL EXAMINER INTERVIEW SUMMARY (PTOL - 413)			
28	01/16/2004	EXAMINER INTERVIEW SUMMARY RECORD (PTOL - 413)			
27	01/22/2004	NOTICE OF APPEAL FILED			
26	01/28/2004	DATE FORWARDED TO EXAMINER			

25	01/22/2004	AMENDMENT AFTER FINAL REJECTION		90	22
24	01/22/2004	REQUEST FOR EXTENSION OF TIME - GRANTED			
23	11/19/2003	INFORMATION DISCLOSURE STATEMENT (IDS) FILED			
22	07/24/2003	MAIL FINAL REJECTION (PTOL - 326)			
21	07/24/2003	FINAL REJECTION			
20	05/13/2003	DATE FORWARDED TO EXAMINER			
19	05/07/2003	RESPONSE AFTER NON-FINAL ACTION			
18	02/07/2003	MAIL NON-FINAL REJECTION			
17	02/05/2003	NON-FINAL REJECTION			
16	01/24/2003	DATE FORWARDED TO EXAMINER			
15	01/15/2003	AMENDMENT AFTER FINAL REJECTION			
14	10/22/2002	MAIL FINAL REJECTION (PTOL - 326)			
13	10/21/2002	FINAL REJECTION			
12	08/14/2002	DATE FORWARDED TO EXAMINER			
11	08/07/2002	RESPONSE AFTER NON-FINAL ACTION		33	9
10	08/07/2002	REQUEST FOR EXTENSION OF TIME - GRANTED			
9	04/05/2002	MAIL NON-FINAL REJECTION			
8	04/03/2002	NON-FINAL REJECTION			
7	03/28/2002	CASE DOCKETED TO EXAMINER IN GAU			
6	01/22/2002	CASE DOCKETED TO EXAMINER IN GAU			
5	01/04/2002	TRANSFER INQUIRY TO GAU			
4	11/13/2001	APPLICATION DISPATCHED FROM OIPE			
3	11/09/2001	CORRESPONDENCE ADDRESS CHANGE			
2	10/18/2001	IFW SCAN & PACR AUTO SECURITY REVIEW			
1	10/12/2001	INITIAL EXAM TEAM NN			

Search Another: Application# [ ] Search

EXPLANATION OF PTA CALCULATION

EXPLANATION OF PTE CALCULATION

To go back, right click here and select Back. To go forward, right click here and select Forward. To refresh, right click here and select Refresh.

Back to OASIS | Home page

SPE RESPONSE FOR CERTIFICATE OF CORRECTION

Paper No.:20070810

DATE : August 09, 2007

TO SPE OF : ART UNIT 2629

SUBJECT : Request for Certificate of Correction on Patent No.: 6,762,737

A response is requested with respect to the accompanying request for a certificate of correction.

Please complete this form and return with file, within **7** days to:
Certificates of Correction Branch - ST (South Tower) 9A22
Palm location **7590** - Tel. No. (703) 305-8309

With respect to the change(s) requested, correcting Office and/or Applicant's errors, should the patent read as shown in the certificate of correction? No new matter should be introduced, nor should the scope or meaning of the claims be changed.

Thank You For Your Assistance **Certificates of Correction Branch**

The request for issuing the above-identified correction(s) is hereby:

Note your decision on the appropriated box.

☒ **Approved** All changes apply.

☐ **Approved in Part** Specify below which changes **do not** apply.

☐ **Denied** State the reasons for denial below.

Comments:

SPE: Alexander Eisen Art Unit 2629

UNITED STATES PATENT AND TRADEMARK OFFICE

Commissioner for Patents
United States Patent and Trademark Office
P.O. Box 1450
Alexandria, VA 22313-1450
www.uspto.gov

WENDEROTH, LIND & PONACK L.L.P.
2033 K. STREET, NW
SUITE 800
WASHINGTON, DC 20006

MAILED

FEB 27 2009

OFFICE OF PETITIONS

ON PETITION

In re Application of :
Hideki Hayashi, et al :
Application No. 09/974,914 :
Filed: October 12, 2001 :
Attorney Docket No. 2001_1542A :

This is to notify petitioner that the petition under 37 CFR 1.313(c)(2), filed by facsimile transmission on January 2, 2004, to withdraw the above-identified application from issue after payment of the issue fee, was **dismissed as moot** as of January 20, 2004, the date upon which the above-identified application issued as U.S. Patent No. 6,680,894.[1]

Petitioner's attention is directed to 37 CFR 1.313(d) which states that "A petition under this section [37 CFR 1.313(c)] will not be effective to withdraw the application from issue **unless it is actually received and granted by the appropriate officials before the date of issue**" (emphasis in bold). In this instance, the January 2, 2004 petition was not received by the appropriate official until after the date of issuance of U.S. Patent No. 6,680,894 on January 20, 2004. See also MPEP 1308, which states, in pertinent part:

> "**The Office cannot ensure that any petition under 37 CFR 1.313(c)** [filed after payment of the issue fee] **will be acted upon prior to the date of patent grant.** See *Filing of Continuing Applications, Amendments, or Petitions after Payment of Issue Fee,* Notice, 1221 Off. Gaz. Pat. Office 14 (April 6, 1999) . . . **applicants are strongly cautioned to file any desired RCE prior to payment of issue fee.** In addition, **applicants considering filing a RCE after payment of the issue fee are strongly cautioned to call the Office of Petitions to determine whether sufficient time remains** before the patent issue date to consider (and grant) a petition under 37 CFR 1.313(c) and what steps are needed to ensure that a grantable petition under 37 CFR 1.313(c) is before an appropriate official in the Office of Petitions in sufficient time to grant the petition before the patent is issued" (emphasis in bold).

[1] The jurisdiction of the Office over an application ends once the application issues as a patent.

While petitions to withdraw from issue may be faxed to the Centralized Facsimile Number, as was done in this case, applicants were cautioned to hand carry petitions to withdraw from issue directly to the Office of Petitions to allow sufficient time to process the petition. (See *Centralized Delivery and Facsimile Transmission Requirements for Patent Application Related Correspondence, 1275 Off. Gaz. Pat. Office 200* (Oct. 28, 2003)).

Because the January 2, 2004 petition under 37 CFR 1.313(c) to withdraw from issue was not granted, the Request for Continued Examination (RCE) filed on January 2, 2004, is considered an improper submission under 37 CFR 1.114. Accordingly, the RCE and accompanying amendment and Information Disclosure Statement (IDS) will remain in the file of the above-identified patent without further consideration.

No fees, in regard to papers filed on January 2, 2004, were charged to counsel's deposit account, nor are any due.

Telephone inquiries concerning this matter may be directed to the undersigned at (571) 272-3204.

Sherry D. Brinkley
Petitions Examiner
Office of Petitions

UNITED STATES PATENT AND TRADEMARK OFFICE

COMMISSIONER FOR PATENTS
UNITED STATES PATENT AND TRADEMARK OFFICE
WASHINGTON, D.C. 20231
www.uspto.gov

Paper No. 3

MAILED

JUL 3 1 2002

Technology Center 2100

Lerner and Greenberg, P.A.
Post Office Box 2480
Hollywood, FL 33022-2480

In re Application of: R. Donald Dervan, et al.)
Application No. 09/974,927) **DECISION ON REQUEST FOR**
Filed: October 10, 2001) **WITHDRAWAL AS ATTORNEY**
For: COMPUTER SECURITY SYSTEM)

This is a decision on the Request To Withdraw from Representation filed June 26, 2002.

A grantable request to withdraw as attorney of record should indicate thereon the present mailing addresses of the attorney(s) who is/are withdrawing from the record and of the applicant. The request for withdrawal must be signed by every attorney seeking to withdraw or contain a clear indication that one attorney is signing on behalf of another/others. A request to withdraw will not be approved unless at least 30 (thirty) days would remain between the date of approval and the later of the expiration date of a time to file a response or the expiration date of the maximum time period which can be extended under 37 C.F.R. § 1. 136(a). The effective date of withdrawal being the date of decision and not the date of request. See M.P.E.P. § 402.06. 37 C.F.R. § 1.36 further requires that the applicant or patent owner be notified of the withdrawal of the attorney or agent.

The request is **GRANTED**.

Because no request was made for a change in correspondence address, all future communications from the United States Patent and Trademark Office (Office) will ***continue to be directed to the above-listed address*** until otherwise notified by applicant. Applicant is reminded of the obligation to promptly notify the Office of any change in correspondence addresss to ensure receipt of all communications from the Office.

Vincent N. Trans
Special Programs Examiner
Technology Center 2100
Computer Architecture and Software
(703) 305-9750

UNITED STATES PATENT AND TRADEMARK OFFICE

UNDER SECRETARY OF COMMERCE FOR INTELLECTUAL PROPERTY AND
DIRECTOR OF THE UNITED STATES PATENT AND TRADEMARK OFFICE
WASHINGTON, DC 20231
www.uspto.gov

MAILED
FROM DIRECTORS OFFICE

MAR 3 0 2006

TECHNOLOGY CENTER 3600

FISH & RICHARDSON P.C.
P.O. BOX 1022
MINNEAPOLIS, MN 55440-1022

In re application of
Michael M. Hsu et al.
Application No. 09/974,931
Filed: October 09, 2001
For: SECURE TICKETING

: DECISION ON REQUEST
: FOR WITHDRAWAL OF
: ATTORNEY

This is a decision on the request filed on January 14, 2005, under 37 CFR 1.36 and MPEP 402.06, requesting permission to withdraw as the attorney of record in the above-identified application.

The request is **NOT APPROVED as MOOT**.

Under 37 CFR 1.36 an attorney may withdraw only upon application to and approval by the Commissioner. It should be noted that a withdrawal is effective when approved, not when filed. Besides giving due notice to his or her client and delivering to the client all papers and property to which the client is entitled as specified under 37 CFR 10.40, approval of such a request requires that the following conditions be met:

A) Each attorney of record must sign the notice of withdrawal, or the notice must contain a clear indication of one attorney signing on behalf of another, because the Office does not recognize law firms;

B) A proper reason for the withdrawal as enumerated in 37 CFR 10.40(b) or subsection (1)-(6) of 37 CFR 10.40(c) must be provided; and

C) If withdrawal is requested in accordance with 37 CFR 10.40(c) above, there must be at least 30 days between approval of the withdrawal and the later of the expiration date of a time period for reply or the expiration date of the period which can be obtained by a petition and fee for extension of time under 37 CFR 1.136(a).

The request to withdraw as attorney in the above-identified application is not approved as moot because the power of attorney has already been withdrawn as per the Notice to that effect of August 24, 2005.

Kenneth J. Dorner
Special Programs Examiner
Patent Technology Center 3600
(571) 272-6587
Facsimile No.: (571) 273-8300

KJD/sb: 03/28/06

cc: MACPHERSON KWOK CHEN & HEID LLP
1762 TECHNOLOGY DRIVE, SUITE 226
SAN JOSE, CA 95110

UNITED STATES PATENT AND TRADEMARK OFFICE

Commissioner for Patents
United States Patent and Trademark Office
P.O. Box 1450
Alexandria, VA 22313-1450
www.uspto.gov

GOODWIN PROCTER LLP
599 LEXINGTON AVENUE
NEW YORK NY 10022

COPY MAILED

AUG 11 2005

OFFICE OF PETITIONS

In re Application of	:	
Young W. Cho et al	:	
Application No. 09/974,942	:	DECISION GRANTING PETITION
Filed: October 11, 2001	:	UNDER 37 CFR 1.137(b)
Attorney Docket No. A34471	:	

This is a decision on the petition under 37 CFR 1.137(b), filed June 13, 2005, to revive the above-identified application.

The petition is **GRANTED**.

The petition satisfies the conditions for revival pursuant to the provisions of 37 CFR 1.137(b) in that (1) the reply in the form of formal drawings; (2) the petition fee; and (3) the required statement of unintentional delay have been received. Accordingly, the reply is accepted as having been unintentionally delayed.

Telephone inquiries concerning this decision should be directed to the undersigned at (571) 272-3208.

This matter is being referred to Patent Publication and for review of the drawings submitted June 13, 2005.

Karen Creasy

Karen Creasy
Petitions Examiner
Office of Petitions
Office of the Deputy Commissioner
for Patent Examination Policy

OIPE JC11
JAN 14 2005
PATENT & TRADEMARK OFFICE

APPROVED 3/6/06

3621 IFW

PTO/SB/83 (09-04)
Approved for use through 11/30/2005. OMB 0651-0035
U.S. Patent and Trademark Office, U.S. DEPARTMENT OF COMMERCE
Under the Paperwork Reduction Act of 1995, no persons are required to respond to a collection of information unless it displays a valid OMB control number.

REQUEST FOR WITHDRAWAL AS ATTORNEY OR AGENT AND CHANGE OF CORRESPONDENCE ADDRESS

Application Number	09/974,946
Filing Date	October 9, 2001
First Named Inventor	Michael M. HSU
Art Unit	3621
Examiner Name	C. Sherr
Attorney Docket Number	M-15638 US

To: Commissioner for Patents
P.O. Box 1450
Alexandria, VA 22313-1450

Please withdraw me as attorney or agent for the above identified patent application, and

- [x] all the attorneys/agents of record.
- [ ] the attorneys/agents (with registration numbers) listed on the attached paper(s), or
- [ ] the attorneys/agents associated with Customer Number [ ]

NOTE: This box can only be checked when the power of attorney of record in the application is to all the practitioners associated with a customer number.

The reasons for this request are: Case has been transferred to another firm.

CORRESPONDENCE ADDRESS

1. [ ] The correspondence address is NOT affected by this withdrawal.
2. [x] Change the correspondence address and direct all future correspondence to:

[x] The address associated with Customer Number: 32605

OR

[ ] Firm *or* Individual Name					
Address					
City		State		Zip	
Country					
Telephone				Fax	
Signature					
Name	Hans R. Troesch		Registration No.	36,950	
Date	07 Jan 05		Telephone No.	650-839-5070	

NOTE: Withdrawal is effective when approved rather than when received. Unless there are at least 30 days between approval of withdrawal and the expiration date of a time period for response or possible extension period, the request to withdraw is normally disapproved.

This collection of information is required by 37 CFR 1.36. The information is required to obtain or retain a benefit by the public which is to file (and by the USPTO to process) an application. Confidentiality is governed by 35 U.S.C. 122 and 37 CFR 1.11 and 1.14. This collection is estimated to take 12 minutes to complete, including gathering, preparing, and submitting the completed application form to the USPTO. Time will vary depending upon the individual case. Any comments on the amount of time you require to complete this form and/or suggestions for reducing this burden, should be sent to the Chief Information Officer, U.S. Patent and Trademark Office, U.S. Department of Commerce, P.O. Box 1450, Alexandria, VA 22313-1450. DO NOT SEND FEES OR COMPLETED FORMS TO THIS ADDRESS. SEND TO: **Commissioner for Patents, P.O. Box 1450, Alexandria, VA 22313-1450.**

If you need assistance in completing the form, call 1-800-PTO-9199 and select option 2.

UNITED STATES PATENT AND TRADEMARK OFFICE

UNITED STATES DEPARTMENT OF COMMERCE
United States Patent and Trademark Office
Address: COMMISSIONER FOR PATENTS
P.O. Box 1450
Alexandria, Virginia 22313-1450
www.uspto.gov

APPLICATION NO.	FILING DATE	FIRST NAMED INVENTOR	ATTORNEY DOCKET NO.	CONFIRMATION NO.
09/974,962	10/12/2001	Tsugio Takahashi	501.34214R00	7576

20457 7590 09/14/2007
ANTONELLI, TERRY, STOUT & KRAUS, LLP
1300 NORTH SEVENTEENTH STREET
SUITE 1800
ARLINGTON, VA 22209-3873

EXAMINER
NGUYEN, VAN THU T

ART UNIT	PAPER NUMBER
2824	

MAIL DATE	DELIVERY MODE
09/14/2007	PAPER

Please find below and/or attached an Office communication concerning this application or proceeding.

The time period for reply, if any, is set in the attached communication.

UNITED STATES DEPARTMENT OF COMMERCE
U.S. Patent and Trademark Office
Address: COMMISSIONER FOR PATENTS
P.O. Box 1450
Alexandria, Virginia 22313-1450

APPLICATION NO./ CONTROL NO.	FILING DATE	FIRST NAMED INVENTOR / PATENT IN REEXAMINATION	ATTORNEY DOCKET NO.
09974962	10/12/01	TAKAHASHI ET AL.	501.34214R00

EXAMINER
Jack Chiang

ART UNIT	PAPER
2825	20070910

DATE MAILED:

ANTONELLI, TERRY, STOUT & KRAUS, LLP
1300 NORTH SEVENTEENTH STREET
SUITE 1800
ARLINGTON, VA 22209-3873

Please find below and/or attached an Office communication concerning this application or proceeding.

Commissioner for Patents

See attached Certificate of Correction

Jack Chiang
SPE
Art Unit: 2825

UNITED STATES PATENT AND TRADEMARK OFFICE
CERTIFICATE OF CORRECTION

PATENT NO.: RE38,944
DATED: Jan. 24, 2006
INVENTOR(S): Takahashi et al.

It is certified that error appears in the above-identified patent and that said Letters Patent is hereby corrected as shown below:

The paragraph beginning at column 1, line 10 has been replaced with the following:

[This application] More than one reissue application has been filed for the reissue of U.S. Patent No. 5,966,341. The reissue applications are application numbers 09/974,962 (the present application); 11,176,881; 11/759,316 and 11/759,345. Serial No. 11/176,881 was filed on July 8, 2005 and is a continuation of the present application. Serial Numbers 11/759,316 and 11/759,345, were both filed on June 7, 2007 and are continuations of Serial No. 11/176,881. The present application is a Reissue of U.S. Patent No. 5,966,341, filed as Serial No. 08/982,398 on December 2, 1997, which is a continuation of application Serial No. 08/779,835, filed on Jan. 7, 1997, now U.S. Pat. No. 5,777,927, which is a continuation of application Ser. No. 08/574,104, filed Dec. 20, 1995 (now U.S. Pat. No. 5,604,697) the entire disclosures of which [is] are hereby incorporated by reference.

SPE RESPONSE FOR CERTIFICATE OF CORRECTION

Paper No.: _____

DATE : 6/9/06

TO SPE OF : ART UNIT 2600

SUBJECT : Request for Certificate of Correction for Appl. No.: 09/974,963 Patent No.: 7020080

Please respond to this request for a certificate of correction within 7 days.

Please review the requested changes/corrections as shown in the **COCIN** document(s) in the IFW application image. No new matter should be introduced, nor should the scope or meaning of the claims be changed.

Please complete the response (see below) and forward the completed response to scanning using document code **COCX**.

SPE RESPONSE FOR CERTIFICATE OF CORRECTION

Lamonte M. Newsome
Certificates of Correction Branch
703-308-9390 ext. 112

Thank You For Your Assistance

The request for issuing the above-identified correction(s) is hereby:

Note your decision on the appropriate box.

☑ **Approved** — All changes apply.

☐ **Approved in Part** — Specify below which changes **do not** apply.

☐ **Denied** — State the reasons for denial below.

Comments: _____

Certificates of Correction Branch

SPE — Art Unit 2616

UNITED STATES PATENT AND TRADEMARK OFFICE

COMMISSIONER FOR PATENTS
UNITED STATES PATENT AND TRADEMARK OFFICE
WASHINGTON, D.C. 20231
www.uspto.gov
DIW 09-02

Paper No. 10

G. E. EHRLICH (1995) LTD.
c/o ANTHONY CASTORINA
SUITE 207
2001 JEFFERSON DAVIS HIGHWAY
ARLINGTON VA 22202

COPY MAILED

SEP 1 8 2002

OFFICE OF PETITIONS

In re Application of	:	
Amit, Thomson, and Itskovitz-Eldor	:	
Application No. 09/975,011	:	ON PETITION
Filed: 12 October, 2001	:	
Attorney Docket No. 01/22631	:	

This is in response to the correspondence filed on 14 May, 2002, which is being treated as a petition under 37 CFR 1.48(a) and 1.47(a).

The petition under 37 CFR 1.48 is **DISMISSED**.

The petition under 37 CFR 1.47 is **DISMISSED**.

Applicant is given TWO MONTHS from the mailing date of this decision to reply, correcting the below-noted deficiencies. Any reply should be entitled "Request for Reconsideration of Petition Under 37 CFR 1.48(a) and 1.47(a)," and should only address the deficiencies noted below, except that the reply may include an oath or declaration executed by the non-signing inventor. **FAILURE TO RESPOND WILL RESULT IN ABANDONMENT OF THE APPLICATION.** Extensions of time may be obtained in accordance with 37 CFR 1.136(a).

On 12 October, 2001, the present application was filed without an executed oath or declaration.

Accordingly, on 14 November, 2001, Initial Patent Examination Division mailed a Notice to File Missing Parts of Nonprovisional Application, requiring the statutory basic filing fee, additional

claim fee(s), a signed oath or declaration, and a surcharge for its late filing.

In response, on 11 April, 2002, petitioners filed authorization to charge counsel's deposit account for the basic filing fee, additional claim fee(s), the late filing surcharge, and a three (3) month extension of time fee, as well as a declaration naming Michel Amit, James A. Thomson, and Joseph Itskovitz-Eldor as joint inventors and signed by joint inventors Amit and Itskovitz-Eldor on behalf of themselves and joint inventor Thomson.

Accordingly, on 16 May, 2002, Initial Patent Examination Division mailed a Notice of Incomplete Reply (Nonprovisional) requiring the signature of joint inventor Thomson on the declaration. This Notice was preceded by the filing, however, on 14 May, 2002, of the present petition under 37 CFR 1.48(a) to delete joint inventor Itskovitz-Eldor as a joint inventor as well as a petition under 37 CFR 1.47(a) stating that joint inventor Thomson has refused to sign the declaration.

Petition Under 37 CFR 1.48(a)

A grantable petition under 37 CFR 1.48(a) requires:

(1) a petition including a statement from each person being added as an inventor and from each person being deleted as an inventor that the error in inventorship occurred without deceptive intention on his or her part;
(2) an oath or declaration by the actual inventor or inventors as required by 37 CFR 1.63 or as permitted by 37 CFR 1.42, 1.43, or 1.47;
(3) the fee set forth in 37 CFR 1.17(I); and
(4) if an assignment has been executed by any of the original named inventors, the written consent of the assignee (see 37 CFR 3.73(b)).

The present petition lacks items (1) and (4). In this regard, it is noted that the person sought to be deleted as inventor is named on the declaration, and signed the declaration as "Joseph Itskovitz-Eldor", while the statement of lack of deceptive intent names, and is signed by, the person sought to be deleted as an inventor as "Joseph Itskovitz". As such, it is not clear that the statement of lack of deceptive intent was signed by an individual named on the declaration filed on 11 April, 2001. The name of the individual signing the statement of lack of deceptive intent must be the same as the name of the person listed on the

oath or declaration sought to be deleted as an inventor. Likewise, the consent of the assignee, Technion Research and Development Foundation Ltd., signed by Avishai Tzur, lists the name of the person to be deleted as an inventor as "Joseph Itskovitz". The name of the person to be deleted as an inventor as named by the consent of the assignee must match the name of the person listed on the original oath or declaration.

Petition Under 37 CFR 1.47(a)

A grantable petition under 37 CFR 1.47(a) requires:

(1) proof that the non-signing inventor cannot be reached or located, notwithstanding diligent effort, or refuses to sign the oath or declaration after having been presented with the application papers (specification, claims and drawings);

(2) an acceptable oath or declaration in compliance with 35 U.S.C. §§ 115 and 116;

(3) the petition fee;

(4) a surcharge of $130 or $65 (small entity) if the petition and/or declaration is not filed at the time of filing the application, and

(5) a statement of the last known address of the non-signing inventor.

The petition lacks item (1).

In regards to item (1), it is unclear what inventive entity was listed on the declaration sent with the application papers to non-signing joint inventor Thomson. If the declaration sent to Thomson listed Itskovitz-Eldor as a joint inventor, then it cannot be ruled out that Thomson refused to sign the declaration due to inventorship *per se*. If that is the case, petitioners should send an additional copy of the application papers, accompanied by a declaration naming the proper inventive entity (Amit and Thomson). Any renewed petition should state whether the declaration listing Amit, Thomson, and Itskovitz-Eldor or Amit and Thomson as joint inventors was sent with the application papers to joint inventor Thomson.

Likewise, if the declaration sent with the application papers to Thomson listed only Amit and Thomson as joint inventors, the petition must be dismissed because the oath or declaration which petitioners seek to have accepted under 37 CFR 1.47(a) as signed by joint inventor Amit on behalf of himself and joint inventor Thomson does not state the correct inventive entity in light of the dismissal of the petition under 37 CFR 1.48(a), as the

inventive entity is currently Amit, Thomson, and Itskovitz-Eldor. Petitioners should note, however, that if the declaration sent with the application papers to joint inventor Thomson lists the correct inventive entity (Amit and Thomson) the petition under 37 CFR 1.47(a) appears grantable pending submission of a grantable petition under 37 CFR 1.48(a).

Counsel's deposit account, No. 50-1407, will be charged $260.00 for consideration of the petitions under 37 CFR 1.47(a) and 1.48(a). Additionally, counsel's deposit account will be charged the difference between a three (3) and four (4) month extension of the time to reply to the Notice to File Missing Parts mailed on 14 November, 2001 ($260.00).

Further correspondence with respect to this matter should be addressed as follows:

By mail: Assistant Commissioner for Patents
Box DAC
Washington, D.C. 20231

By FAX: (703) 308-6916
Attn: Office of Petitions

By hand: Crystal Plaza Four, Suite 3C23
2201 S. Clark Place
Arlington, VA

Telephone inquiries concerning this matter may be directed to the undersigned at 703.308.6918.

D Wood

Douglas I. Wood
Senior Petitions Attorney
Office of Petitions
Office of the Deputy Commissioner
for Patent Examination Policy

UNITED STATES PATENT AND TRADEMARK OFFICE

COMMISSIONER FOR PATENTS
UNITED STATES PATENT AND TRADEMARK OFFICE
WASHINGTON, D.C. 20231
www.uspto.gov
DIW 11-02

Paper No. 15

G. E. EHRLICH (1995) LTD.
c/o ANTHONY CASTORINA
SUITE 207
2001 JEFFERSON DAVIS HIGHWAY
ARLINGTON VA 22202

COPY MAILED

NOV 12 2002

OFFICE OF PETITIONS

In re Application of	:	
Amit and Thomson	:	
Application No. 09/975,011	:	ON PETITION
Filed: 12 October, 2001	:	
Attorney Docket No. 01/22631	:	

This is in response to the request for reconsideration under 37 CFR 1.47(a) and 1.48(a), filed on 30 October, 2002, which is being treated as (1) a petition under 37 CFR 1.48(a) to amend the inventive entity by the deletion of Joseph Itskovitz-Eldor, and (2) a petition under 37 CFR 1.47(a) to accept the declaration filed on 14 May, 2002, which lacks the signature of joint inventor James A. Thomson.

The petition is **GRANTED**.

Petition Under 37 CFR 1.48(a)

A grantable petition under 37 CFR 1.48(a) requires:

(1) a petition including a statement from each person being added as an inventor and from each person being deleted as an inventor that the error in inventor ship occurred without deceptive intention on his or her part;

(2) an oath or declaration by the actual inventor or inventors as required by 37 CFR 1.63 or as permitted by 37 CFR 1.42, 1.43, or 1.47;

(3) the fee set forth in 37 CFR 1.17(i); and

(4) if an assignment has been executed by any of the

original named inventors, the written consent of the assignee (see 37 CFR 3.73(b)).

Petitioners have now presented a statement by Joseph Itskovitz-Eldor stating that the error in inventorship occurred without deceptive intention on his part, a declaration by the actual inventors, as well the written consent of the assignee.

Petition Under 37 CFR 1.47(a)

A grantable petition under 37 CFR 1.47(a) requires:

(1) proof that the non-signing inventor cannot be reached or located, notwithstanding diligent effort, or refuses to sign the oath or declaration after having been presented with the application papers (specification, claims and drawings);

(2) an acceptable oath or declaration in compliance with 35 U.S.C. §§ 115 and 116;

(3) the petition fee;

(4) a surcharge of $130 or $65 (small entity) if the petition and/or declaration is not filed at the time of filing the application, and

(5) a statement of the last known address of the non-signing inventor.

Petitioners' registered patent attorney, Sol Sheinbein, has stated that he personally had a copy of the application papers sent to non-signing joint inventor. Additionally, counsel attempted to contact the non-signing inventor by telephone, but was unsuccessfully. The non-signing inventor has failed to sign and return the declaration naming him as a joint inventor along with Michal Amit.

The above-identified application and papers have been reviewed and found in compliance with 37 CFR 1.47(a). This application is hereby <u>accorded Rule 1.47(a) status</u>.

As provided in Rule 1.47(c), this Office will forward notice of this application's filing to the non-signing inventor at the address given in the declaration. Notice of the filing of this application will also be published in the Official Gazette.

Additionally, as a result of papers filed on 14 May and 30 October, 2002, it has been found that this nonprovisional application, as filed, through error and without deceptive intent, improperly set forth the inventorship, and, accordingly, this application has been corrected in compliance with 37 CFR

1.48(a)(2). The inventorship of this application has been changed by the deletion of Joseph Itskovitz-Eldor, Haifa, Israel.

The application will be forwarded to the Office of Initial Patent Examination (OIPE) for issuance of a corrected filing receipt, and correction of the file jacket and PTO PALM data to reflect the inventorship as corrected. Thereafter, the application will be forwarded to Technology Center 1600 for examination in due course.

Telephone inquiries concerning this matter may be directed to the undersigned at (703)308-6918.

DWood

Douglas I. Wood
Senior Petitions Attorney
Office of Petitions
Office of the Deputy Commissioner
for Patent Examination Policy

UNITED STATES PATENT AND TRADEMARK OFFICE

COMMISSIONER FOR PATENTS
UNITED STATES PATENT AND TRADEMARK OFFICE
WASHINGTON, D.C. 20231
www.uspto.gov
DW 11-02

COPY MAILED

NOV 12 2002

OFFICE OF PETITIONS

James A. Thomson
1807 Regent Street
Madison, WI 53705

In re Application of
Amit et al.
Application No. 09/975,011
Filed: 12 October, 2001
For: CLONAL HUMAN EMBRYONIC STEM CELL LINES AND METHODS OF GENERATING SAME

Dear Mr. Thomson:

You are named as a joint inventor in the above identified United States patent application, filed under the provisions of 35 U.S.C. 116 (United States Code), and 37 CFR 1.47(a), Rules of Practice in Patent Cases. Should a patent be granted on the application you will be designated therein as a joint inventor.

As a named inventor you are entitled to inspect any paper in the file wrapper of the application, order copies of all or any part thereof (at a prepaid cost per 37 CFR 1.19) or make your position of record in the application. Alternatively, you may arrange to do any of the preceding through a registered patent attorney or agent presenting written authorization from you. If you care to join the application, counsel of record (see below) would presumably assist you. Joining in the application would entail the filing of an appropriate oath or declaration by you pursuant to 37 CFR 1.63.

Telephone inquiries regarding this communication should be directed to the undersigned at 703/308-6918. Requests for information regarding your application should be directed to the File Information Unit at 703/308-2733. Information regarding how to pay for and order a copy of the application, or a specific paper in the application, should be directed to Certification Division at 703/308-9726 or 1-800-972-6382 (outside the Washington D.C. area).

D Wood

Douglas I. Wood
Senior Petitions Examiner
Office of Petitions
Office of the Deputy Commissioner
for Patent Examination Policy

G. E. EHRLICH (1995) LTD.
c/o ANTHONY CASTORINA
SUITE 207
2001 JEFFERSON DAVIS HIGHWAY
ARLINGTON VA 22202

UNITED STATES PATENT AND TRADEMARK OFFICE

COMMISSIONER FOR PATENTS
UNITED STATES PATENT AND TRADEMARK OFFICE
P.O. BOX 1450
ALEXANDRIA, VA 22313-1450
www.uspto.gov

#7

MAILED

FEB 19 2004

Office of the Director
(Group 3300)

Gerald Villeneuve
23 St-Louis
Gatineau QC J8T 2R7 CA CANADA

In re Application of
Gerald Villeneuve
Application No. 09/975,015
Filed: October 12, 2001
For: CLIPBOARD WITH DUAL CLAMPING MEMBERS

DECISION ON PETITION TO WITHDRAW THE HOLDING OF ABANDONMENT

This is in reply to applicant's communication, filed in the United States Patent and Trademark Office on September 8, 2003. This communication is being treated as a petition to withdraw the holding of abandonment.

The petition is **DISMISSED** pending submission of a renewed petition.

A review of the file record reveals that an Office action was mailed to applicant at the address of record on October 3, 2002. Since a response to the October 3, 2002 Office action has not been received, the application was held abandoned and a Notice of Abandonment was mailed May 7, 2003.

There is a strong presumption that mail properly addressed and delivered to the United States Postal Service was in fact delivered to the addressee. An allegation that an Office communication was not received may be considered in a formal petition for the withdrawal of the holding of abandonment, in accordance with *Delgar Inc. v. Schuyler*, 172 USPQ 513. However, the presumption that the Office communication was delivered to applicant may be overcome by a showing that the communication was not, in fact, received as indicated below.

Applicant's (in this case the inventor, Mr. Gerald Villeneuve) statements of non-receipt should include a statement by him, and by anyone else at applicant's correspondence address, who would have handled the Office communication, and include any available documentary evidence of mail received, covering a reasonable period after the date of the Office communication, to show non-receipt of the communication in question. Copies of records on which the receipt date of the Office communication would have been entered had it been received, (*e.g.*, a copy of the outside of the file maintained by applicant), are required if available. Also, a showing of any docket records *or other method* which would serve as a reminder of a response due date should be submitted. Whatever method applicant uses as a reminder, and submits in response to this decision should be adequately explained. Also, a statement is required that a search of the file maintained by applicant, or any other location where correspondence from the USPTO is kept, failed to find a copy of the Office communication in question. Finally, applicant must state that he was in fact at the correspondence address of record at the time the Office action would have been received.

Any such exhibits should be submitted as part of statement(s) showing that no Office communication was ever received.

Any request for reconsideration of this decision must be submitted within **TWO (2) MONTHS** from the mail date of this decision. Extensions of time under 37 CFR 1.136(a) are permitted. The reconsideration request should include a cover letter entitled "Renewed Petition Under 37 CFR 1.181" and should be mailed to the Commissioner for Patents, P.O. Box 1450, Technology Center 3600, Alexandria, VA 22313-1450.

Kenneth J. Dorner
Special Programs Examiner
Patent Technology Center 3600
(703) 308-0866

KJD/cps: 2/8/04

UNITED STATES PATENT AND TRADEMARK OFFICE

#9

COMMISSIONER FOR PATENTS
UNITED STATES PATENT AND TRADEMARK OFFICE
P.O. BOX 1450
ALEXANDRIA, VA 22313-1450
www.uspto.gov

MAILED

JUN 03 2004

Office of the Director
Group 3600

Gerald Villeneuve
23 St-Louis
Gatineau, Quebec, Canada
J8T 2R7

In re Application of
Gerald Villeneuve
Application No. 09/975,015
Filed: October 12, 2001
For: CLIPBOARD WITH DUAL CLAMPING MEMBERS

DECISION ON PETITION TO WITHDRAW THE HOLDING OF ABANDONMENT

This is in reply to applicant's communication, filed in the United States Patent and Trademark Office on March 29, 2004. This communication is being treated as a renewed petition to withdraw the holding of abandonment.

The petition is **GRANTED**.

A review of the file record reveals that an Office action was mailed to applicant at the address of record on October 3, 2002. Since a response to the October 3, 2002 Office action has not been received, the application was held abandoned and a Notice of Abandonment was mailed May 7, 2003.

There is a strong presumption that mail properly addressed and delivered to the United States Postal Service was in fact delivered to the addressee. An allegation that an Office communication was not received may be considered in a formal petition for the withdrawal of the holding of abandonment, in accordance with *Delgar Inc. v. Schuyler*, 172 USPQ 513. However, the presumption that the Office communication was delivered to applicant may be overcome by a showing that the communication was not, in fact, received as indicated below.

Applicant's (in this case the inventor, Mr. Gerald Villeneuve) statements of non-receipt should include a statement by him, and by anyone else at applicant's correspondence address, who would have handled the Office communication, and include any available documentary evidence of mail received, covering a reasonable period after the date of the Office communication, to show non-receipt of the communication in question. Copies of records on which the receipt date of the Office communication would have been entered had it been received, (*e.g.*, a copy of the outside of the file maintained by applicant), are required if available. Also, a showing of any docket records *or other method* which would serve as a reminder of a response due date should be submitted. Whatever method applicant uses as a reminder, and submits in response to this decision should be adequately explained. Also, a statement is required that a search of the file maintained by applicant, or any other location where correspondence from the USPTO is kept, failed to find a copy of the Office communication in question. Finally, applicant must state that he was in fact at the correspondence address of record at the time the Office action would have been received.

Any such exhibits should be submitted as part of statement(s) showing that no Office communication was ever received.

The renewed petition includes a signed statement by Mr. Villeneuve and his wife that the Office action was not received at the correspondence address at the time the action was mailed. Applicant further states that he does not keep written records for incoming mail or any flag system advising when correspondence is due. Applicant attests to the fact that a search was conducted of a special folder containing documents for this patent [sic] and that the document mailed October 3, 2002 was not found. Applicant's statements regarding the non-receipt of the Office action mailed October 3, 2002 are acceptable.

The application is being forwarded to the Supervisory Legal Instruments Examiner with instructions to withdraw the abandonment, return the application to pending status, and to redate and remail the Office Action of October 3, 2002 based on the reasoning in the case of *Delgar v. Schuyler*, 172 USPQ 513.

Randolph A. Reese
Special Programs Examiner
Patent Technology Center 3600
(703) 308-2121

RAR/mjz: 6/2/04

UNITED STATES PATENT AND TRADEMARK OFFICE

COMMISSIONER FOR PATENTS
UNITED STATES PATENT AND TRADEMARK OFFICE
P.O. BOX 1450
ALEXANDRIA, VA 22313-1450
www.uspto.gov

HOWARD I. SOBELMAN
SNELL & WILMER, LLP
ONE ARIZONA CENTER
400 EAST VAN BUREN STREET
PHOENIX, AZ 85004-2202

COPY MAILED

MAR 16 2007

OFFICE OF PETITIONS

In re Patent No. 7,106,479	:	
Issued: September 12, 2006	:	
Application No. 09/975,027	:	NOTICE
Filed: October 10, 2001	:	
Patentee: Stephen C. Roy	:	

This is a notice regarding your request for acceptance of a fee deficiency submission under 37 CFR 1.28 filed November 22, 2006. On September 1, 1998, the Court of Appeals for the Federal Circuit held that 37 CFR 1.28(c) is the sole provision governing the time for correction of the erroneous payment of the issue fee as a small entity. **See DH Technology v. Synergystex International, Inc. 154 F.3d 1333, 47 USPQ2d 1865 (Fed. Cir. Sept. 1, 1998).**

The Office no longer investigates or rejects original or reissue applications under 37 CFR 1.56. **1098 Off. Gaz. Pat. Office 502 (January 3, 1989)**. Therefore, nothing in this Notice is intended to imply that an investigation was done.

Your fee deficiency submission under 37 CFR 1.28 is hereby **ACCEPTED**.

This application no longer qualifies for small entity status. Accordingly, all future fees must be paid at the large entity rate.

It is noted that a Revocation of Power of Attorney and Change of Correspondence Address (Power) was filed on March 8, 2006. However, since no attorney registered to practice before the U.S. Patent and Trademark Office was appointed by the Power, it is being treated as a request to change the correspondence address. The correspondence address has been so changed.

Petitioner should also note that the mere filing of a power of attorney and/or a change of correspondence address will not affect the fee address. Therefore, if petitioner desires to receive future correspondence regarding any Maintenance Fee Reminder which may be mailed regarding maintenance fees for the above-identified patent, the "fee address" and/or "customer number" forms should be submitted.

A copy of this decision is being mailed to the new correspondence address of record.

Inquiries related to this communication should be directed to the Office of Petitions Staff at (571) 272-3201.

Sherry D. Brinkley
Petitions Examiner
Office of Petitions

cc: AARON R. PETTIT, ESQ.
ASSISTANT COUNSEL
STYKER CORPORATION
2725 FAIRFIELD RAOD
KALAMAZOO, MI 49002

UNITED STATES PATENT AND TRADEMARK OFFICE

Commissioner for Patents
United States Patent and Trademark Office
P.O. Box 1450
Alexandria, VA 22313-1450
www.uspto.gov

In re Patent No. 6767740
Issue Date: July 27,2004
Application No. 09975041
Filed: October 9,2001
Attorney Docket No. SRAM-101/US/P

:
:DECISION GRANTING PETITION
:UNDER 37 CFR 1.378(c)
:

This is a decision on the electronic petition, filed September 30,2008 ,under 37 CFR 1.378(c) to accept the unintentionally delayed payment of the 3.5 year maintenance fee for the above-identified patent.

The petition is **GRANTED**.

The maintenance fee is accepted, and the above-identified patent reinstated as of September 30,2008 . This decision also constitutes notice that the fee has been accepted. An electronic copy of the petition and this decision has been created as an entry in the Image File Wrapper. Nevertheless, petitioner should print and retain an independent copy.

Telephone inquiries related to this electronic decision should be directed to the Electronic Business Center at 1-866-217-9197.

Under the Paperwork Reduction Act of 1995, no persons are required to respond to a collection of information unless it displays valid OMB control number.

PETITION TO ACCEPT UNINTENTIONALLY DELAYED PAYMENT OF MAINTENANCE FEE IN AN EXPIRED PATENT (37 CFR 1.378(c))

Patent Number	Issue Date (YYYY-MM-DD)	Application Number	Filing Date (YYYY-MM-DD)	Docket Number (if applicable)
6,767,740	2004-07-27	09/975,041	2001-10-09	

CAUTION: Maintenance fee (and surcharge, if any) payment must correctly identify: (1) the patent number and (2) the application number of the actual U.S. application leading to issuance of that patent to ensure the fee(s) is/are associated with the correct patent. 37 CFR 1.366(c) and (d).

SMALL ENTITY
☒ Patentee claims, or has previously claimed, small entity status. See 37 CFR 1.27.

LOSS OF ENTITLEMENT TO SMALL ENTITY STATUS
☐ Patentee is no longer entitled to small entity status. See 37 CFR 1.27(g)

NOT Small Entity			Small Entity		
	Fee	Code		Fee	Code
○	3 ½ year	(1551)	◉	3 ½ year	(2551)
○	7 ½ year	(1552)	○	7 ½ year	(2552)
○	11 ½ year	(1553)	○	11 ½ year	(2553)

SURCHARGE
The surcharge required by 37 CFR 1.20(i)(2) (Fee Code 1558) must be paid as a condition of accepting unintentionally delayed payment of the maintenance fee.

MAINTENANCE FEE (37 CFR 1.20(e)-(g))
The appropriate maintenance fee must be submitted with this petition.

STATEMENT
THE UNDERSIGNED CERTIFIES THAT THE DELAY IN PAYMENT OF THE MAINTENANCE FEE TO THIS PATENT WAS UNINTENTIONAL

PETITIONER(S) REQUEST THAT THE DELAYED PAYMENT OF THE MAINTENANCE FEE BE ACCEPTED AND THE PATENT REINSTATED

THIS PORTION MUST BE COMPLETED BY THE SIGNATORY OR SIGNATORIES

37 CFR 1.378(d) states: "Any petition under this section must be signed by an attorney or agent registered to practice before the Patent and Trademark Office, or by the patentee, the assignee, or other party in interest."

I certify, in accordance with 37 CFR 1.4(d)(4) that I am

○ An attorney or agent registered to practice before the Patent and Trademark Office

○ A sole patentee

◉ A joint patentee; I certify that I am authorized to sign this submission on behalf of all the other patentees.

○ A joint patentee; all of whom are signing this e-petition

○ The assignee of record of the entire interest

Under the Paperwork Reduction Act of 1995, no persons are required to respond to a collection of information unless it displays valid OMB control number.

A Joint Patentee and I certify that I am authorized to sign this submission on behalf of all the other patentees			
A signature of the applicant or representative is required in accordance with 37 CFR 1.33 and 10.18. Please see 37 CFR 1.4(d) for the form of the signature.			
Signature	/Jeff Johnson/	Date (YYYY-MM-DD)	2008-09-30
Name	Jeff Johnson		

This collection of information is required by 37 CFR 1.378(c). The information is required to obtain or retain a benefit by the public which is to file (and by the USPTO to process) an application. Confidentiality is governed by 35 U.S.C. 122 and 37 CFR 1.11 and 1.14. This collection is estimated to take 1 hour to complete, including gathering, preparing, and submitting the completed application form to the USPTO. Time will vary depending upon the individual case. Any comments on the amount of time you require to complete this form and/or suggestions for reducing this burden, should be sent to the Chief Information Officer, U.S. Patent and Trademark Office, U.S. Department of Commerce, P.O. Box 1450, Alexandria, VA 22313-1450. DO NOT SEND FEES OR COMPLETED FORMS TO THIS ADDRESS. **This form can only be used when in conjunction with EFS-Web. If this form is mailed to the USPTO, it may cause delays in reinstating the patent.**

Privacy Act Statement

The Privacy Act of 1974 (P.L. 93-579) requires that you be given certain information in connection with your submission of the attached form related to a patent application or patent. Accordingly, pursuant to the requirements of the Act, please be advised that: (1) the general authority for the collection of this information is 35 U.S.C. 2(b)(2); (2) furnishing of the information solicited is voluntary; and (3) the principal purpose for which the information is used by the U.S. Patent and Trademark Office is to process and/or examine your submission related to a patent application or patent. If you do not furnish the requested information, the U.S. Patent and Trademark Office may not be able to process and/or examine your submission, which may result in termination of proceedings or abandonment of the application or expiration of the patent.

The information provided by you in this form will be subject to the following routine uses:

1. The information on this form will be treated confidentially to the extent allowed under the Freedom of Information Act (5 U.S.C. 552) and the Privacy Act (5 U.S.C. 552a). Records from this system of records may be disclosed to the Department of Justice to determine whether the Freedom of Information Act requires disclosure of these record s.

2. A record from this system of records may be disclosed, as a routine use, in the course of presenting evidence to a court, magistrate, or administrative tribunal, including disclosures to opposing counsel in the course of settlement negotiations.

3. A record in this system of records may be disclosed, as a routine use, to a Member of Congress submitting a request involving an individual, to whom the record pertains, when the individual has requested assistance from the Member with respect to the subject matter of the record.

4. A record in this system of records may be disclosed, as a routine use, to a contractor of the Agency having need for the information in order to perform a contract. Recipients of information shall be required to comply with the requirements of the Privacy Act of 1974, as amended, pursuant to 5 U.S.C. 552a(m).

5. A record related to an International Application filed under the Patent Cooperation Treaty in this system of records may be disclosed, as a routine use, to the International Bureau of the World Intellectual Property Organization, pursuant to the Patent Cooperation Treaty.

6. A record in this system of records may be disclosed, as a routine use, to another federal agency for purposes of National Security review (35 U.S.C. 181) and for review pursuant to the Atomic Energy Act (42 U.S.C. 218(c)).

7. A record from this system of records may be disclosed, as a routine use, to the Administrator, General Services, or his/her designee, during an inspection of records conducted by GSA as part of that agency's responsibility to recommend improvements in records management practices and programs, under authority of 44 U.S.C. 2904 and 2906. Such disclosure shall be made in accordance with the GSA regulations governing inspection of records for this purpose, and any other relevant (i.e., GSA or Commerce) directive. Such disclosure shall not be used to make determinations about individuals.

8. A record from this system of records may be disclosed, as a routine use, to the public after either publication of the application pursuant to 35 U.S.C. 122(b) or issuance of a patent pursuant to 35 U.S.C. 151. Further, a record may be disclosed, subject to the limitations of 37 CFR 1.14, as a routine use, to the public if the record was filed in an application which became abandoned or in which the proceedings were terminated and which application is referenced by either a published application, an application open to public inspections or an issued patent.

9. A record from this system of records may be disclosed, as a routine use, to a Federal, State, or local law enforcement agency, if the USPTO becomes aware of a violation or potential violation of law or regulation.

UNITED STATES PATENT AND TRADEMARK OFFICE

COMMISSIONER FOR PATENTS
UNITED STATES PATENT AND TRADEMARK OFFICE
P.O. BOX 1450
ALEXANDRIA, VA 22313-1450
www.uspto.gov

Paper No. 7

BAKER BOTTS L.L.P.
30 Rockefeller Plaza
New York, New York 10112-4498

JAN - 7 2004

In re Application of
OHTSUKI et al
Application No. 09/975,114
Filed: October 11, 2001
Attorney Docket No. A34699

DECISION ON PETITION

This is a decision on the petition under 37 C.F.R. § 1.181, filed September 15, 2003, to withdraw the holding of abandonment of the above-identified application.

The petition is **DISMISSED**.

This application was held abandoned for failure to respond to the non-final Office action within the shortened statutory period of three months from the mailing date of December 18, 2002. The application became abandoned on March 18, 2002 by operation of law.

Petitioner states that the non-final Office action was never received by applicant's representative and attests to the fact that a search of the file jacket and docket records indicates that the non-final Office action was not received. The petition is accompanied by a copy of the docket record for March 18, 2003 and June 18, 2003, the three and six month dates from the non-final Office action mailing date.

Pursuant to M.P.E.P. §711.03(c), it is the petitioner's burden to demonstrate that the non-final Office action was not in fact received at the correspondence address of record at the time it was mailed. The showing required to establish the failure to receive an Office action must include a statement from the practitioner stating that the Office action was not received by the practitioner and attesting to the fact that a search of the file jacket and docket records indicates that the Office action was not received. A copy of the docket record where the non-received Office action would have been received had it been received and docketed must be attached to and referenced in the practitioner's statement. See "Withdrawing the Holding of Abandonment When Office Actions Are Not Received" 1156 Official Gazette 53 (November 16, 1993) and M.P.E.P. §711.03(c).

The docket record for March 18, 2003 and June 18, 2003 needs further explanation. Petitioner has not stated that the docket records for March 18, 2003 and June 18, 2003 are where the non-received Office action would have been entered had it been received and docketed.

The requirement that a copy of the docket record where the non-received Office action would have been entered had it been received and docketed be submitted and referenced in petitioner's statement as set forth in M.P.E.P. § 711.03(c) does not appear to be complied with.

Any request for reconsideration of this decision must be submitted within TWO (2) MONTHS from the mail date of this decision.

Questions regarding this decision should be directed to Jose' G. Dees at (703) 308-4628.

Richard K. Seidel, Director
Technology Center 2800
Semiconductors, Electrical and Optical
Systems and Components

UNITED STATES PATENT AND TRADEMARK OFFICE

COMMISSIONER FOR PATENTS
UNITED STATES PATENT AND TRADEMARK OFFICE
P.O. BOX 1450
ALEXANDRIA, VA 22313-1450
www.uspto.gov

RECEIVED
CENTRAL FAX CENTER
OCT 21 2004

BAKER BOTTS L.L.P.
04 JAN 13 AM 10: 09

BAKER BOTTS L.L.P.
30 Rockefeller Plaza
New York, New York 10112-4498

JAN - 7 2004

In re Application of OHTSUKI et al Application No. 09/975,114 Filed: October 11, 2001 Attorney Docket No. A34699	: : : : :	DECISION ON PETITION

This is a decision on the petition under 37 C.F.R. § 1.181, filed September 15, 2003, to withdraw the holding of abandonment of the above-identified application.

The petition is **DISMISSED**.

This application was held abandoned for failure to respond to the non-final Office action within the shortened statutory period of three months from the mailing date of December 18, 2002. The application became abandoned on March 18, 2002 by operation of law.

Petitioner states that the non-final Office action was never received by applicant's representative and attests to the fact that a search of the file jacket and docket records indicates that the non-final Office action was not received. The petition is accompanied by a copy of the docket record for March 18, 2003 and June 18, 2003, the three and six month dates from the non-final Office action mailing date.

Pursuant to M.P.E.P. §711.03(c), it is the petitioner's burden to demonstrate that the non-final Office action was not in fact received at the correspondence address of record at the time it was mailed. The showing required to establish the failure to receive an Office action must include a statement from the practitioner stating that the Office action was not received by the practitioner and attesting to the fact that a search of the file jacket and docket records indicates that the Office action was not received. A copy of the docket record where the non-received Office action would have been received had it been received and docketed must be attached to and referenced in the practitioner's statement. See "Withdrawing the Holding of Abandonment When Office Actions Are Not Received" 1156 Official Gazette 53 (November 16, 1993) and M.P.E.P. §711.03(c).

Docketed
For 3/7/2004 by

The docket record for March 18, 2003 and June 18, 2003 needs further explanation. Petitioner has not stated that the docket records for March 18, 2003 and June 18, 2003 are where the non-received Office action would have been entered had it been received and docketed.

The requirement that a copy of the docket record where the non-received Office action would have been entered had it been received and docketed be submitted and referenced in petitioner's statement as set forth in M.P.E.P. § 711.03(c) does not appear to be complied with.

Any request for reconsideration of this decision must be submitted within TWO (2) MONTHS from the mail date of this decision.

Questions regarding this decision should be directed to Jose' G. Dees at (703) 308-4628.

571 272 1569

Richard K. Seidel, Director
Technology Center 2800
Semiconductors, Electrical and Optical
Systems and Components

UNITED STATES PATENT AND TRADEMARK OFFICE

COMMISSIONER FOR PATENTS
UNITED STATES PATENT AND TRADEMARK OFFICE
P.O. BOX 1450
ALEXANDRIA, VA 22313-1450
WWW.USPTO.GOV

BAKER BOTTS L.L.P.

04 JAN 29 AM 10: 09

BAKER BOTTS L.L.P.
30 Rockefeller Plaza
New York, New York 10112-4498

JAN - 7 2004

E.Faraji

In re Application of
OHTSUKI et al
Application No. 09/975,114
Filed: October 11, 2001
Attorney Docket No. A34699

DECISION ON PETITION

This is a decision on the petition under 37 C.F.R. § 1.181, filed September 15, 2003, to withdraw the holding of abandonment of the above-identified application.

The petition is **DISMISSED**.

This application was held abandoned for failure to respond to the non-final Office action within the shortened statutory period of three months from the mailing date of December 18, 2002. The application became abandoned on March 18, 2002 by operation of law.

Petitioner states that the non-final Office action was never received by applicant's representative and attests to the fact that a search of the file jacket and docket records indicates that the non-final Office action was not received. The petition is accompanied by a copy of the docket record for March 18, 2003 and June 18, 2003, the three and six month dates from the non-final Office action mailing date.

Pursuant to M.P.E.P. §711.03(c), it is the petitioner's burden to demonstrate that the non-final Office action was not in fact received at the correspondence address of record at the time it was mailed. The showing required to establish the failure to receive an Office action must include a statement from the practitioner stating that the Office action was not received by the practitioner and attesting to the fact that a search of the file jacket and docket records indicates that the Office action was not received. A copy of the docket record where the non-received Office action would have been received had it been received and docketed must be attached to and referenced in the practitioner's statement. See "Withdrawing the Holding of Abandonment When Office Actions Are Not Received" 1156 Official Gazette 53 (November 16, 1993) and M.P.E.P. §711.03(c).

Docketed
For 3/7/2004 by

BEST AVAILABLE COPY

The docket record for March 18, 2003 and June 18, 2003 needs further explanation. Petitioner has not stated that the docket records for March 18, 2003 and June 18, 2003 are where the non-received Office action would have been entered had it been received and docketed.

The requirement that a copy of the docket record where the non-received Office action would have been entered had it been received and docketed be submitted and referenced in petitioner's statement as set forth in M.P.E.P. § 711.03(c) does not appear to be complied with.

Any request for reconsideration of this decision must be submitted within TWO (2) MONTHS from the mail date of this decision.

Questions regarding this decision should be directed to Jose' G. Dees at (703) 308-4628.

571 272 1569

Richard K. Seidel, Director
Technology Center 2800
Semiconductors, Electrical and Optical
Systems and Components

BEST AVAILABLE COPY

UNITED STATES PATENT AND TRADEMARK OFFICE

Commissioner for Patents
United States Patent and Trademark Office
P.O. Box 1450
Alexandria, VA 22313-1450
www.uspto.gov

Paper No.04042005

BAKER BOTTS L.L.P.
30 Rockefeller Plaza
New York, New York 10112-4498

APR 22 2005

In re Application of
OHTSUKI et al
Application No. 09/975,114
Filed: October 11, 2001
Attorney Docket No. A34699

DECISION ON PETITION

This is a decision on the request for reconsideration of the petition to withdraw the holding of abandonment of the above-identified application filed February 2, 2004. The petition under 37 C.F.R. § 1.181, filed September 15, 2003, to withdraw the holding of abandonment was dismissed on January 7, 2004.

The petition is **GRANTED**.

This application was held abandoned for failure to respond to the non-final Office action within the shortened statutory period of three months from the mailing date of December 18, 2002. The application became abandoned on March 18, 2002 by operation of law.

Petitioner states that the non-final Office action was never received by applicant's representative and attests to the fact that a search of the file jacket and docket records indicates that the non-final Office action was not received. The petition is accompanied by a copy of the docket record for March 18, 2003 and June 18, 2003, the three and six month dates from the non-final Office action mailing date.

Pursuant to M.P.E.P. §711.03(c), it is the petitioner's burden to demonstrate that the non-final Office action was not in fact received at the correspondence address of record at the time it was mailed. The showing required to establish the failure to receive an Office action must include a statement from the practitioner stating that the Office action was not received by the practitioner and attesting to the fact that a search of the file jacket and docket records indicates that the Office action was not received. A copy of the docket record where the non-received Office action would have been received had it been received and docketed must be attached to and referenced in the practitioner's statement. See "Withdrawing the Holding of Abandonment When Office

Actions Are Not Received" 1156 Official Gazette 53 (November 16, 1993) and M.P.E.P. §711.03(c).

The petition was dismissed because the docket records for March 18, 2003 and June 18, 2003 needed further explanation. Petitioner did not stated that the docket records for March 18, 2003 and June 18, 2003 are where the non-received Office action would have been entered had it been received and docketed.

The request for reconsideration satisfies the requirement that the petitioner state that the copy of the docket records are where the non-received Office action would have been entered had it been received and docketed as set forth in M.P.E.P. §711.03(c).

The application file is being forwarded to the Technical Support staff for re-mailing the non-final Office action. The shortened period for response set therein will be reset to expire three months from the date the Office action is remailed.

Questions regarding this decision should be directed to Jose' G. Dees at (571) 272-1569.

Richard K. Seidel, Director
Technology Center 2800
Semiconductors, Electrical and Optical
Systems and Components

UNITED STATES PATENT AND TRADEMARK OFFICE

COMMISSIONER FOR PATENTS
UNITED STATES PATENT AND TRADEMARK OFFICE
P.O. BOX 1450
ALEXANDRIA, VA 22313-1450
www.uspto.gov

COPY MAILED

MAR 0 8 2007

OFFICE OF PETITIONS

PHILIP S. JOHNSON
JOHNSON & JOHNSON
ONE JOHNSON & JOHNSON PLAZA
NEW BRUNSWICK, NJ 08933-7003

In re Application of :
Eitan T. Wiener, et al. :
Application No. 09/975,127 : ON PETITION
Filed: October 10, 2001 :
Attorney Docket No. END0746US/2640/1G820-US1 :

This is a decision in response to the petition, filed October 17, 2006, to revive the above-identified application under the provisions of 37 CFR 1.137(b).

The petition is **GRANTED**.

The application became abandoned for a failure to reply in a timely manner to an Office action mailed February 24, 2006. This decision precedes the mailing of a Notice of Abandonment. On October 17, 2006, the present petition was filed.

The petition satisfies the requirements of 37 CFR 1.137(b) in that petitioner has supplied (1) the reply in the form of an amendment; (2) the petition fee of $1,500.00; and (3) an adequate statement of unintentional delay[1].

This application is being referred to Technology Center AU 3731 for appropriate action by the Examiner in the normal course of business on the amendment received October 17, 2006.

Telephone inquiries concerning this decision should be directed to the undersigned at (571) 272-3204. Inquiries relating to further prosecution should be directed to the Technology Center.

Sherry D. Brinkley
Petitions Examiner
Office of Petitions

[1] 37 CFR 1.137(b)(3) requires a statement that the entire delay in filing the required reply from the due date for the reply until the filing of a grantable petition pursuant to 37 CFR 1.137(b) was unintentional. Although the statement contained in the petition varies from the language required by 37 CFR 1.137(b)(3), the statement will be construed as the statement required by 37 CFR 1.137(b)(3). Petitioner must notify the Office if this is **not** a correct interpretation of the statement contained in the instant petition.

UNITED STATES PATENT AND TRADEMARK OFFICE

COMMISSIONER FOR PATENTS
UNITED STATES PATENT AND TRADEMARK OFFICE
P.O. BOX 1450
ALEXANDRIA, VA 22313-1450
WWW.USPTO.GOV

Paper No. 11

COPY MAILED

AUG 29 2003

OFFICE OF PETITIONS

PAUL S. MADAN
MADAN, MOSSMAN & SRIRAM
2603 AUGUST, SUITE 700
HOUSTON TX 77057-1130

In re Application of
J. Kevyn Smith et al
Application No. 09/975,161
Filed: October 11, 2001
Attorney Docket No. 194-27668-US

ON PETITION

This is a decision on the petition, filed August 26, 2003, under 37 CFR 1.313(c)(2) to withdraw the above-identified application from issue after payment of the issue fee.

The petition is **GRANTED**.

The above-identified application is withdrawn from issue for consideration of a submission under 37 CFR 1.114 (request for continued examination). See 37 CFR 1.313(c)(2).

Petitioner is advised that the issue fee paid on August 20, 2003 in the above-identified application cannot be refunded. If, however, the above-identified application is again allowed, petitioner may request that it be applied towards the issue fee required by the new Notice of Allowance.[1]

Telephone inquiries should be directed to the undersigned at (703) 305-8859.

After receipt of the file in the Office of Petitions, the application will be forwarded to Technology Center AU 2877 for processing of the request for continued examination under 37 CFR 1.114.

Karen Creasy

Karen Creasy
Petitions Examiner
Office of Petitions
Office of the Deputy Commissioner
for Patent Examination Policy

---

[1] The request to apply the issue fee to the new Notice may be satisfied by completing and returning the new Issue Fee Transmittal Form PTOL-85(b), which includes the following language thereon: "Commissioner for Patents is requested to apply the Issue Fee and Publication Fee (if any) or re-apply any previously paid issue fee to the application identified above." Petitioner is advised that, whether a fee is indicated as being due or not, the Issue Fee Transmittal Form **must** be completed and timely submitted to avoid abandonment. Note the language in bold text on the first page of the Notice of Allowance and Fee(s) Due (PTOL-85).

UNITED STATES PATENT AND TRADEMARK OFFICE

UNITED STATES DEPARTMENT OF COMMERCE
United States Patent and Trademark Office
Address: COMMISSIONER FOR PATENTS
P.O. Box 1450
Alexandria, Virginia 22313-1450
www.uspto.gov

APPLICATION NO.	FILING DATE	FIRST NAMED INVENTOR	ATTORNEY DOCKET NO.	CONFIRMATION NO.
09/975,161	10/11/2001	J. Kevyn Smith	194-27668-US	9119

44871 7590 01/28/2005

MADAN, MOSSMAN & SRIRAM, P.C.
2603 AUGUSTA
SUITE 700
HOUSTON, TX 77057

EXAMINER
BARTH, VINCENT P

ART UNIT	PAPER NUMBER
2877	

DATE MAILED: 01/28/2005

Please find below and/or attached an Office communication concerning this application or proceeding.

UNITED STATES PATENT AND TRADEMARK OFFICE

Commissioner for Patents
United States Patent and Trademark Office
P.O. Box 1450
Alexandria, VA 22313-1450
www.uspto.gov

Paper No. 011905

MADAN, MOSSMAN & SRIRAM, P.C.
2603 AUGUSTA
SUITE 700
HOUSTON TX 77057

In re Application of:	:
Smith ET AL.	: PETITION FOR CORRECTION OF
Serial No.: 09/975,161	: INVENTORSHIP
Filed: October 11, 2001	: UNDER 37 CFR § 1.48(a)
Attorney Docket No.: 194-27668-US	:

This is a decision on the petition filed August 17, 2004 to correct inventorship under 37 CFR 1.48 (a).

The petition is GRANTED.

In view of the papers filed August 17, 2004 it has been found that this nonprovisional application, as filed, through error and without deceptive intent, improperly set forth the inventorship, and accordingly, this application has been corrected in compliance with 37 CFR 1.48 (a). The inventorship of this application has been changed by adding the name:

Michael James Ponstingl

The application will be forwarded to the Office of Initial Patent Examination (OIPE) for issuance of a corrected filing receipt, and correction of Office records to reflect the inventorship as corrected.

Gregory J. Toatley, Jr.
Supervisory Patent Examiner,
Art Unit 2877

UNITED STATES PATENT AND TRADEMARK OFFICE

COMMISSIONER FOR PATENTS
UNITED STATES PATENT AND TRADEMARK OFFICE
WASHINGTON, D.C. 20231
www.uspto.gov

SERIAL NUMBER	REQUEST DATE	FIRST NAMED APPLICANT	ATTORNEY DOCKET NO.
09/975,162	11/9/01	NICOLO F. MACHI, ET AL	NONE

Title:
IR LASER DIODE BASED HIGH INTENSITY LIGHT

Art Unit	Paper Number

Correspondence Address:
LARRY PALGUTA
HONEYWELL
3520 WESTMOOR STREET
SOUTH BEND, INDIANA 46628-1373

Licensee under 35 U.S.C. 184 is hereby granted to file in any foreign country a patent application and any amendments thereto corresponding to the subject matter of this U.S. application identified above and/or any material accompanying the petition. This license is conditioned upon modification of any applicable secrecy order and is subject to revocation without notice.

License Number: 528,365

Grant Date: 15-Feb-02

Approved

for Commissioner of Patents and Trademar

This license empowers the filing, the causation and the authorization of the filing of a foreign application or applications on the subject matter identified above, subsequent forwarding of all duplicate and formal papers and the prosecution of such application or applications.

This license does not empower the filing of any applications, amendments, supplements or continuances originating in this country which disclose inventions, modifications, or variations not disclosed in the subject matter identified above.

This license is to be retained by the licensee and may be used at anytime on or after the date thereof. This license is not retroactive unless specifically indicated.

The grant of this license does not in any way lesson the responsibility of the licensee for the security of the subject matter as imposed by any Government contract or the provisions of existing laws relating to espionage and the national security or the export of technical data. Licensees should apprise themselves of current regulations, especially with respecct to certain countries, of other agencies, particularly the Office of Foreign Assets Control, Department of the Treasury; Office of Munitions Control, Department of State (with respect to Arms, Munitions and Implements of War); the Bureau of Trade Regulation, Office of Export Adminsttration, Department of Commerce; and the Department of Energy.

LICENSE FOR FOREIGN FILING

[Title 35, United States Code (1952) Sections 184, 185, 186]

UNITED STATES PATENT AND TRADEMARK OFFICE

COMMISSIONER FOR PATENTS
UNITED STATES PATENT AND TRADEMARK OFFICE
P.O. BOX 1450
ALEXANDRIA, VA 22313-1450
WWW.USPTO.GOV

Paper No. 8

Steven J. Funk
Sprint Corporation
8140 Ward Parkway
Kansas City, MO 64114

COPY MAILED

AUG 15 2003

OFFICE OF PETITIONS

In re Application of Mark Yarkosky Application No. 09/975,179 Filed: October 11, 2001 Attorney Docket No. 1740	DECISION GRANTING PETITION UNDER 37 CFR 1.137(f)

This is a decision on the "PETITION TO REVIVE UNDER 37 C.F.R. § 1.137(b)," filed May 7, 2003, which is properly treated as a petition to revive the instant nonprovisional application under the unintentional provisions of 37 CFR 1.137(f).

The petition is **GRANTED**.

The request for refund is **DENIED**.

Petitioner states that the instant nonprovisional application is the subject of a corresponding PCT application (No. PCT/US02/31410) filed on October 3, 2002. However, the U.S. Patent and Trademark Office was unintentionally not notified of this filing within 45 days subsequent to the filing of the foreign or international application[1].

In view of the above, this application became abandoned pursuant to 35 U.S.C. § 122(2)(B)(iii) and 37 CFR 1.213(c) for failure to timely notify the Office of the filing of an application in a foreign country, or under a multilateral international agreement, that requires publication of applications 18 months after filing.

A petition under 37 CFR 1.137(f) must be accompanied by:

(1) the reply, which is met by the notification of such filing in a foreign country or under a multinational treaty;

(2) the petition fee as set forth in 37 CFR 1.17(m); and

(3) a statement that the entire delay in filing the required reply from the due date of the reply until the filing of a grantable petition was unintentional.

---

[1] A Rescission of Nonpublication Request was filed on October 15, 2002. However, it was not accompanied by a Notice of Foreign Filing. The act of filing the international application with the US Receiving Office is not a notification to the Office of the foreign filing within the meaning of 35 U.S.C. 122(b)(2)(B)(iii) or 37 CFR 1.213(c).

The instant petition has been found to be in compliance with 37 CFR 1.137(f). Accordingly, the failure to timely notify the Office of a foreign or international filing within 45 days after the date of filing of such foreign or international application as provided by 35 U.S.C. 122(b)(2)(B)(iii) and 37 CFR 1.213(c) is accepted as having been unintentionally delayed.

The previous Request and Certification under 35 U.S.C. 122(b)(2)(B)(i) has been rescinded. A Notice Regarding Rescission of Nonpublication Request to show the projected publication date of November 20, 2003 accompanies this decision on petition.

35 U.S.C. 41(a) (7) provides that a petition for the revival of an unintentionally abandoned application or for the unintentionally delayed payment of the issue fee must be accompanied by the petition fee set forth in 37 CFR 1.17(m), unless the petition is filed under 35 U.S.C. 133 or 151 (on the basis of unavoidable delay), in which case the fee is set forth in 37 CFR 1.17(l). Thus, unless the circumstances warrant the withdrawal of the holding of abandonment (i.e., it is determined that the application is not properly held abandoned), the payment of a petition fee to obtain the revival of an abandoned application is a statutory prerequisite to revival of the abandoned application, and cannot be waived.

In addition, the phrase "[o]n filing" in 35 U.S.C. 41(a)(7) means that the petition fee is required for the filing (and not merely the grant) of a petition under 37 CFR 1.137. See H.R. Rep. No. 542, 97th Cong., 2d Sess. 6 (1982), reprinted in 1982 U.S.C.C.A.N. 770 ("[t]he fees set forth in this section are due on filing the petition"). Therefore, the Office: (A) will not refund the petition fee required by 37 CFR 1.17(l) or 1.17(m), regardless of whether the petition under 37 CFR 1.137 is dismissed or denied; and (B) will not reach the merits of any petition under 37 CFR 1.137 lacking the requisite petition fee.

In view thereof, petitioner's request to waive or refund the petition fee must be denied.

The application is being forwarded to Technology Center 2684 for examination in due course.

Telephone inquiries regarding this decision should be directed to the undersigned at (703) 305-0309.

Nancy Johnson

Nancy Johnson
Senior Petitions Attorney
Office of Petitions

Enclosure: Notice Regarding Rescission of Nonpublication Request

UNITED STATES PATENT AND TRADEMARK OFFICE

UNITED STATES DEPARTMENT OF COMMERCE
United States Patent and Trademark Office
Address: COMMISSIONER OF PATENTS AND TRADEMARKS
P.O. Box 1450
Alexandria, Virginia 22313-1450
www.uspto.gov

APPLICATION NUMBER	FILING OR 371 (c) DATE	FIRST NAMED APPLICANT	ATTY. DOCKET NO.
09/975,179	10/11/2001	Mark Yarkosky	1740

CONFIRMATION NO. 9109

OC000000010706268

Steven J. Funk
Sprint Corporation
8140 Ward Parkway
Kanasas City, MO 64114

Date Mailed: 08/15/2003

NOTICE REGARDING RESCISSION OF NONPUBLICATION REQUEST AND NOTICE OF FOREIGN FILING

Applicant's rescission of the previously-filed nonpublication request and/or notice of foreign filing is acknowledged. The paper has been reflected in the United States Patent and Trademark Office's (USPTO's) computer records so that the earliest possible projected publication date can be assigned.

The projected publication date is 11/20/2003.

If applicant has not "foreign filed,"[1] then applicant need take no further action regarding the nonpublication request.

If applicant "foreign filed" the application after filing the above application and before rescinding the nonpublication request and the rescission did not also include a notice of foreign filing, then a notice of foreign filing (not merely a rescission) is required to be filed within 45 days of the date of foreign filing. See 35 U.S.C. § 122(b)(2)(B)(iii), and Clarification of the United States Patent and Trademark Office's Interpretation of the Provisions of 35 U.S.C. § 122(b)(2)(B)(ii)-(iv), __ Off. Gaz. Pat. Office _ (July 1, 2003). This document is also posted on the USPTO Internet site at: www.uspto.gov.

If a notice of foreign filing was not filed within 45 days of the date of "foreign filing," then the application became abandoned pursuant to 35 U.S.C. § 122(b)(2)(B)(iii), and applicant should either file a petition to revive or notify the Office that the application is abandoned. See 37 CFR 1.137(f). Any such petition to revive will be forwarded to the Office of Petitions for a decision. Note that the filing of the petition will not operate to stay any period of reply that may be running against the application.

Questions regarding petitions to revive should be directed to the Office of Petitions at (703) 305-9282. Questions regarding publications of patent applications should be directed to the patent application publication hotline at (703) 605-4283 or by e-mail pgpub@uspto.gov.

[1]Note that "foreign filing" means "filing an application directed to the same invention in another country, or under a multilateral international agreement, that requires publication of applications 18 months after filing" for purpose of this notice.

THIS PAGE BLANK (USPTO)

UNITED STATES PATENT AND TRADEMARK OFFICE

COMMISSIONER FOR PATENTS
UNITED STATES PATENT AND TRADEMARK OFFICE
WASHINGTON, D.C. 20231
www.uspto.gov

Paper No. 4

John Vanden Bosche
17405 NE 131 St.
Redmond, WA 98052

APR – 3 2002

In re Application of:
Calley et al.
Application No. 09/975,240
Filed: October 12, 2001

DECISION ON PETITION
TO MAKE SPECIAL

This is a decision on the petition under 37 C.F.R. § 1.102(c), filed October 23, 2001, to make the above-identified application special under the accelerated examination procedure set forth in the Manual of Patent Examining Procedure (M.P.E.P.), § 708.02, Item V: Environmental Quality and Item VI: Energy.

A grantable petition under 37 C.F.R. § 1.102(c), and in accordance with M.P.E.P. § 708.02, Item V, for inventions which materially enhance the quality of the environment of mankind by contributing to the restoration or maintenance of the basic life-sustaining natural elements, i.e., air, water, and soil, must be accompanied by statements under 37 C.F.R. § 1.102 by the applicant, assignee, or an attorney/agent registered to practice before the Office explaining how the invention contributes to the restoration or maintenance of one of these life-sustaining elements. No fee is required for this petition.

A grantable petition under 37 C.F.R. § 1.102(c), and in accordance with M.P.E.P. § 708.02, Item VI, for inventions which materially contribute to (A) the discovery or development of energy resources, or (B) the more efficient utilization and conservation of energy resources, must be accompanied by statements under 37 C.F.R. § 1.102 by the applicant, assignee, or an attorney/agent registered to practice before the Office explaining how the invention materially contributes to category (A) or (B) set forth above. No fee is required for this petition.

Petitioner asserts that the present invention will materially contribute to the development or conservation of energy resources dy contributing to the development of wind energy resources.

The petition satisfies the requirements pursuant to M.P.E.P. § 708.02. Accordingly, the petition is **GRANTED**.

The application is being forwarded to the examiner for expedited prosecution.

If the examiner can make this application special without prejudice to any possible interfering applications, and s/he should make a rigid search for such, s/he is authorized to do so for the next action. Should the application be rejected, the application will not be considered special for the subsequent action unless the applicant promptly makes a bona fide effort to place the application in condition for allowance, even if it is necessary to have an interview with the examiner to accomplish this purpose.

If the examiner finds any interfering application for the same subject matter, s/he should consider such application simultaneously with this application and should state in the official letter of such application that s/he is taking it out of its turn because of possible interference.
Should an appeal be taken in this application or should this application become involved in an interference, consideration of the appeal and the interference will be expedited by all Patent and Trademark Office officials concerned, contingent likewise upon diligent prosecution by the applicant.

After allowance, this application will be given priority for printing. See M.P.E.P. § 1309.

Inquiries regarding this decision should be directed to Michael L. Gellner at 703-308-1721.

M. L. Gellner

Michael L. Gellner, Special Programs Examiner
Technology Center 2800
Semiconductors, Electrical and Optical
Systems and Components

UNITED STATES PATENT AND TRADEMARK OFFICE

Commissioner for Patents
United States Patent and Trademark Office
P.O. Box 1450
Alexandria, VA 22313-1450
www.uspto.gov

FINNEGAN, HENDERSON, FARABOW,
GARRETT & DUNNER, LLP
901 NEW YORK AVENUE, NW
WASHINGTON, DC 20001-4413

COPY MAILED

DEC 2 8 2009

OFFICE OF PETITIONS

In re Application of	:	
John Polk	:	
Application No. 09/975,241	:	DECISION GRANTING PETITION
Filed: October 12, 2001	:	UNDER 37 CFR 1.313(c)(2)
Attorney Docket No. 06556.0003-04000	:	

This is a decision on the petition under 37 CFR 1.313(c)(2), filed December 23, 2009, to withdraw the above-identified application from issue after payment of the issue fee.

The petition is **GRANTED**.

The above-identified application is withdrawn from issue for consideration of a submission under 37 CFR 1.114 (request for continued examination). *See* 37 CFR 1.313(c)(2).

Petitioner is advised that the issue fee paid on July 13, 2009 cannot be refunded. If, however, this application is again allowed, petitioner may request that it be applied towards the issue fee required by the new Notice of Allowance.[1]

Telephone inquiries regarding this decision should be directed to undersigned at (571) 272-1642. All other inquiries concerning the examination or status of this application should be directed to the Technology Center.

This application is being referred to Technology Center AU 3691 for processing of the request for continued examination under 37 CFR 1.114 and for consideration of the concurrently filed information disclosure statement.

/AMW/
April M. Wise
Petitions Examiner
Office of Petitions

---

[1] *The request to apply the issue fee to the new Notice may be satisfied by completing and returning the new Part B – Fee(s) Transmittal Form (along with any balance due at the time of submission). Petitioner is advised that the Issue Fee Transmittal Form* ***must*** *be completed and timely submitted to avoid abandonment of the application.*

UNITED STATES PATENT AND TRADEMARK OFFICE

Commissioner for Patents
United States Patent and Trademark Office
P.O. Box 1450
Alexandria, VA 22313-1450
www.uspto.gov

HUMAN GENOME SCIENCES, INC.
INTELLECTUAL PROPERTY DEPT.
14200 SHADY GROVE ROAD
ROCKVILLE, MD 20850

COPY MAILED

DEC 1 0 2004

OFFICE OF PETITIONS

In re Application of :
Paul A. Moore et al :
Application No. 09/975,253 : DECISION ON PETITION
Filed: October 12, 2001 : UNDER 37 CFR 1.78(a)(3)
Attorney Docket No. PF196P1

This is a decision on the petition, filed July 26, 2004, which is being treated as a petition under 37 CFR 1.78(a)(3) to accept an unintentionally delayed claim under 35 U.S.C. § 120 for the benefit of priority to the prior-filed nonprovisional application set forth in the concurrently filed amendment.

The petition is **GRANTED**.

A petition for acceptance of a claim for late priority under 37 CFR 1.78(a)(3) is only applicable to those applications filed on or after November 29, 2000. Further, the petition is appropriate only after the expiration of the period specified in 37 CFR 1.78(a)(2)(ii). In addition, the petition under 37 CFR 1.78(a)(3) must be accompanied by:

> **(1)** the reference required by 35 U.S.C. § 120 and 37 CFR 1.78(a)(2)(i) of the prior-filed application, unless previously submitted;
> **(2)** the surcharge set forth in § 1.17(t); and
> **(3)** a statement that the entire delay between the date the claim was due under 37 CFR 1.78(a)(2)(ii) and the date the claim was filed was unintentional. The Commissioner may require additional information where there is a question whether the delay was unintentional.

The instant pending application was filed on October 12, 2001, and was pending at the time of filing of the instant petition. A reference to the prior-filed nonprovisional application has been included in an amendment to the first sentence of the specification following the title as required by 37 CFR 1.78(a)(2)(iii).

The instant nonprovisional application was filed after November 29, 2000, and the claim herein for the benefit of priority to the prior-filed nonprovisional application is submitted after expiration of the period specified in 37 CFR 1.78(a)(2)(ii). Also, the reference to the prior-filed nonprovisional application was submitted during the pendency of the instant nonprovisional application, for which the claim for benefit of priority is sought. *See* 35 U.S.C. § 120. Accordingly, having found that the instant petition for acceptance of an unintentionally delayed claim for the benefit of priority under 35 U.S.C. § 120 to the prior-filed nonprovisional application satisfies the conditions of 37 CFR 1.78(a)(3), the petition is granted.

The granting of the petition to accept the delayed benefit claim to the prior-filed application under 37 CFR 1.78(a)(3) should not be construed as meaning that the instant application is entitled to the benefit of the prior-filed application. In order for the instant application to be entitled to the benefit of the prior-filed application, all other requirements under 35 U.S.C. § 120 and 37 CFR 1.78(a)(1) and (a)(2) must be met. Similarly, the fact that the corrected Filing Receipt accompanying this decision on petition includes the prior-filed application should not be construed as meaning that applicant is entitled to the claim for benefit of priority to the prior-filed application noted thereon. Accordingly, the examiner will, in due course, consider this benefit claim and determine whether the instant application is entitled to the benefit of the earlier filing date.

Any inquiries concerning this decision may be directed to Irvin Dingle at (571) 272-3210.

This matter is being forwarded to Technology Center Art Unit 1647.

Frances Hicks

Frances Hicks
Petitions Examiner
Office of Petitions
Office of the Deputy Commissioner
for Patent Examination Policy

Attachment: Corrected Filing Receipt

UNITED STATES PATENT AND TRADEMARK OFFICE

Commissioner for Patents
United States Patent and Trademark Office
P.O. Box 1450
Alexandria, VA 22313-1450
www.uspto.gov

CUSTOMER #77052
CYPRESS SEMICONDUCTOR
C/O STEVEN B. KELBER
JAGTIANI + GUTTAG, LLP
10363-A DEMOCRACY LANE
FAIRFAX, VA 22030

COPY MAILED

MAY 06 2009

OFFICE OF PETITIONS

In re Application of	:	
NARAYANAN, Sundar et al.	:	
Application No. 09/975,257	:	DECISION ON PETITION
Filed: October 12, 2001	:	TO WITHDRAW
Attorney Docket No. **PM01021**	:	FROM RECORD
	:	

This is a decision on the Request to Withdraw as attorney or agent of record under 37 C.F.R. § 1.36(b), filed November 19, 2008.

The request is **NOT APPROVED** because it is moot.

A review of the file record indicates that the power of attorney to Customer #77052 has been revoked by the assignee of the patent application on January 09, 2009. Accordingly, the request to withdraw under 37 C.F.R. § 1.36(b) is moot.

All future communications from the Office will continue to be directed to the below-listed address until otherwise notified by applicant.

Telephone inquires concerning this decision should be directed to Michelle R. Eason at 571-272- 4231.

Michelle R. Eason
Paralegal Specialist
Office of Petitions

cc: **CUSTOMER NO. #60909**
CYPRESS SEMICONDUCTOR CORPORATION
198 CHAMPION COURT
SAN JOSE CA 95134-1709

UNITED STATES PATENT AND TRADEMARK OFFICE

Commissioner for Patents
United States Patent and Trademark Office
P.O. Box 1450
Alexandria, VA 22313-1450
www.uspto.gov

Paper No. 12

Charles H. DeVoe
Kolisch, Hartwell, Dickinson, McCormack & Heuser
Suite 200
520 S.W. Yamhill Street
Portland, OR 97204

COPY MAILED

OCT 13 2004

OFFICE OF PETITIONS

In re Application of	:	
Masae Yoyasu	:	
Application No. 09/975,284	:	ON PETITION
Filed: October 10, 2001	:	
Attorney Docket No. SHX 326	:	

This is a decision on the petition under 37 CFR 1.137(b), filed July 15, 2004, to revive the above-identified application.

The above-identified application became abandoned for failure to reply within the meaning of 37 CFR 1.113 in a timely manner to the final Office action mailed October 20, 2003, which set a shortened statutory period for reply of three (3) months. No extensions of time under the provisions of 37 CFR 1.136(a) were obtained. Accordingly, the above-identified application became abandoned after midnight January 20, 2004.

In response, petitioner submitted with the instant petition $1,330 for the petition to revive fee, a Request for Continued Examination (RCE) along with the $770 filing fee, and a copy of a previously submitted amendment.

The petition is **GRANTED**.

The application file is being forwarded to Technology Center Art Unit 3635, for processing the Request for Continued Examination under 37 CFR 1.114, and for further review of the amendment previously filed on January 23, 2004.

Telephone inquiries concerning this decision should be directed to the undersigned at (571) 272-3226.

Andrea Smith
Petitions Examiner
Office of Petitions
Office of the Deputy Commissioner
for Patent Examination Policy

UNITED STATES PATENT AND TRADEMARK OFFICE

Commissioner for Patents
United States Patent and Trademark Office
P.O. Box 1450
Alexandria, VA 22313-1450
www.uspto.gov

MAILED

MAY 06 2009

TECHNOLOGY CENTER 2100

Kent J. Sieffert
SHUMAKER & SIEFFERT, P.A
1625 RADIO DRIVE , SUITE 300
WOODBURY MN 55125

In re Application of: PEIFFER, Christopher
Application No. **09/975,286**
Filed: October 10, 2001
Atty. Docket No. 1014-152US01
Title: String Matching Method and Device

DECISION ON PETITION
UNDER 37 C.F.R. § 1.181

This is a decision on the petition filed April 24, 2008 under 37 CFR § 1.181 to invoke Supervisory Authority of the Commissioner and require the Examiner to withdraw the holding of non-compliance for the "Summary of Claimed Subject Matter" in the Applicant's Appeal Brief filed January 07, 2008 as defective. The petition also request the entry of Appeal Brief filed December 10, 2007 and corrected Summary of Claimed Subject Matter filed January 07, 2008.

Accordingly, this petition is **GRANTED.**

RELEVANT PROSECUTION HISTORY

11/20/07	Applicant files Appeal Brief.
12/07/07	**First** Notification of non-compliance Appeal Brief is mailed in response to Appeal Brief filed 11/20/07.
01/07/08	Appellant's Response to Notification of non-compliance Appeal Brief is mailed in response to Appeal Brief filed 12/07/07.
04/28/08	**Second** Notification of non-compliance Appeal Brief is mailed in response to Appeal Brief filed January 07, 2008.
04/24/08	Petition for review by the Technology Center SPRE under 37 CFR §1.181 filed on April 24, 2008.
09/05/08	Applicant files Appeal Brief responsive to Final office action mailed February 22, 2007. Also including a Response to notice of non-compliant Appeal Brief mailed 01/17/08, thereby requesting the withdrawal of holding of non-compliance for Summary of Claimed Subject Matter filed 1/07/08 and entry of Applicant's Appeal Brief filed 12/10/07.

REGULATION & PROCEDURES

2274 Appeal Brief: V. REQUIREMENTS FOR THE APPEAL BRIEF

A fee as set forth in 37 CFR 41.20(b)(2) is required when the appeal brief is filed for the first time in a particular reexamination proceeding, 35 U.S.C. 41(a). 37 CFR 41.37 provides that the appellant shall file a brief of the authorities and arguments on which he or she will rely to maintain his or her appeal, *including a summary of claimed subject matter which must refer to the specification by page and line number, and to the drawing, if any, by reference characters, and a copy of the claims involved.* Only one copy of the appeal brief is required. Where the request for reexamination was filed by a third party requester, a copy of the brief must be served on that third party requester.

1205.02 Appeal Brief Content

(v) Summary of claimed subject matter. A *concise explanation of the subject matter defined in each of the independent claims involved in the appeal, which must refer to the specification by page and line number, and to the drawing, if any, by reference characters.* While reference to page and line number of the specification *requires somewhat more detail than simply summarizing the invention, it is considered important to enable the Board to more quickly determine where the claimed subject matter is described in the application.* For *each independent claim involved in the appeal and for each dependent claim argued separately* under the provisions of 37 CFR 41.37(c)(1)(vii), every means plus function and step plus function as permitted by 35 U.S.C. 112, sixth paragraph, must be identified and the structure, material, or acts described in the specification as corresponding to each claimed function *must be set forth with reference to the specification by page and line number, and to the drawing, if any, by reference characters.* If appellant does not provide a summary of the claimed subject matter as required by 37 CFR 41.37(c)(1)(v), the Office will notify appellant of the defect in the brief and give appellant a time period within which to file an amended brief. See 37 CFR 41.37(d).

1205.03 Non-Compliant Appeal Brief and Amended Brief

In response to the Notice of Non-Compliant Appeal Brief (37 CFR 41.37) or the Office communication that requires an amended brief, appellant is required to file an amended brief that is either a complete new brief with the required corrections or a replacement section(s) as noted below:

(B) When the Office holds the brief to be defective solely due to appellant 's failure to provide a summary of the claimed subject matter as required by 37 CFR 41.37(c)(1)(v), an entire new brief *need not*, and should not, be filed. Rather, a paper providing a summary of the claimed subject matter as required by 37 CFR 41.37(c)(1)(v) will suffice. Failure to timely respond to the Office's requirement will result in dismissal of the appeal. See MPEP § 1215.04 and § 711.02(b).

DECISION

The Appeal Brief filed 1/07/08 in response to **first** notice of non-compliance mailed

12/07/07 was reviewed with respect to the requirements under 37 CFR 41.37 which require that Appellant brief include a summary of claimed subject matter which must refer to the specification by page and line number, to the drawing, if any, by reference characters, and found to be in complies with the requirements.

Regarding the **second** Notification of non-compliance Appeal Brief is mailed in response to Appeal Brief filed January 07, 2008. Appellant submitted a corrected Summary of the Claimed Subject Matter, as required by 37 CFR 41.37(c)(1)(v).

The summary of the claimed subject matter contained concise explanation of the subject matter defined in each of the independent claims involved in the appeal, which must refer to the specification by page and line number, and to the drawing, if any, by reference characters, as required.

For the above stated reasons, the petition filed April 23, 2008 under 37 CFR § 1.181 to invoke Supervisory Authority of the Commissioner and require the Examiner to withdraw the second Notice of Non-Compliant Amendment under 37 CFR 1.121 mailed on 04/28/08 in response to Summary of Claimed Subject Matter is **Granted**.

The Second Notification of non-compliance Appeal Brief mailed 4/28/08 in response to Appeal Brief filed January 07, 2008 is hereby **withdrawn**.

The application has been forwarded to examiner of record to consider the Summary of the Claimed Subject Matter, filed on 01/07/08 and issue an appropriate action expeditiously.

Any inquiry regarding this decision should be directed the undersigned whose telephone number is (571) 272-3902. If attempts to reach the undersigned by telephone are unsuccessful, Kim Huynh, Quality Assurance Specialist, can be reached at (571) 272-4147.

/bp/

/Beatriz Prieto/

Beatriz Prieto, Quality Assurance Specialist
Technology Center 2400
Network, Multiplexing, Cable and Security

UNITED STATES PATENT AND TRADEMARK OFFICE

UNITED STATES DEPARTMENT OF COMMERCE
United States Patent and Trademark Office
Address: COMMISSIONER FOR PATENTS
P.O. Box 1450
Alexandria, Virginia 22313-1450
www.uspto.gov

APPLICATION NO.	FILING DATE	FIRST NAMED INVENTOR	ATTORNEY DOCKET NO.	CONFIRMATION NO.
09/975,286	10/10/2001	Christopher Peiffer	1014-152US01	9849

72689 7590 05/07/2009
SHUMAKER & SIEFFERT, P.A
1625 RADIO DRIVE , SUITE 300
WOODBURY, MN 55125

EXAMINER
PATEL, HARESH N

ART UNIT	PAPER NUMBER
2454	

NOTIFICATION DATE	DELIVERY MODE
05/07/2009	ELECTRONIC

Please find below and/or attached an Office communication concerning this application or proceeding.

The time period for reply, if any, is set in the attached communication.

Notice of the Office communication was sent electronically on above-indicated "Notification Date" to the following e-mail address(es):

pairdocketing@ssiplaw.com

UNITED STATES PATENT AND TRADEMARK OFFICE

COMMISSIONER FOR PATENTS
UNITED STATES PATENT AND TRADEMARK OFFICE
WASHINGTON, D.C. 20231
www.uspto.gov

Paper No. 3

COLUMBIA IP LAW GROUP PC
10260 SW GREENBURG ROAD
SUITE 820
PORTLAND, OR 97223

COPY MAILED

MAR - 4 2002

OFFICE OF PETITIONS

In re Application of :
Jonathan O. Nelson et al :
Application No. 09/975,287 : NOTICE
Filed: October 10, 2001 :
Attorney Docket No. 41051.P012X :

This is a notice regarding your request for acceptance of a fee deficiency submission under 37 CFR 1.28. On September 1, 1998, the Court of Appeals for the Federal Circuit held that 37 CFR 1.28(c) is the sole provision governing the time for correction of the erroneous payment of the issue fee as a small entity. **See DH Technology v. Synergystex International, Inc. 154 F.3d 1333, 47 USPQ2d 1865 (Fed. Cir. Sept. 1, 1998).**

The Office no longer investigates or rejects original or reissue applications under 37 CFR 1.56. **1098 Off. Gaz. Pat. Office 502 (January 3, 1989).** Therefore, nothing in this Notice is intended to imply that an investigation was done.

Your fee deficiency submission under 37 CFR 1.28 is hereby **ACCEPTED**.

Inquiries related to this communication should be directed to the Office of Petitions Staff at (703) 305-9285.

This file is being forwarded to Technology Center AU 2682.

Wan Laymon
Petitions Examiner
Office of Petitions
Office of the Deputy Commissioner
for Patent Examination Policy

UNITED STATES PATENT AND TRADEMARK OFFICE

COMMISSIONER FOR PATENTS
UNITED STATES PATENT AND TRADEMARK OFFICE
P.O. BOX 1450
ALEXANDRIA, VA 22313-1450
www.uspto.gov

HEWLETT-PACKARD COMPANY
INTELLECTUAL PROPERTY ADMINISTRATION
P O BOX 272400
FORT COLLINS, CO 80527-2400

COPY MAILED

DEC 1 8 2003

OFFICE OF PETITIONS

In re Application of
Michael L. Rudd et al
Application No. 09/975,292
Filed: October 10, 2001
Attorney Docket No. 10010045-1

: DECISION GRANTING PETITION
: UNDER 37 CFR 313(c)(2)

This is a decision on the petition, filed December 4, 2003, under 37 CFR 1.313(c)(2) to withdraw the above-identified application from issue after payment of the issue fee.

The petition is **GRANTED**.

The above-identified application is withdrawn from issue for consideration of a submission under 37 CFR 1.114 (request for continued examination). See 37 CFR 1.313(c)(2).

Although the petition was not accompanied by a separate Request for Continued Examination under 37 CFR 1.114, and in order to expedite withdrawal of this application from issue, the statement embodied in the petition will be construed as the Request for Continued Examination. Petitioner should in the future submit a separate paper in requesting a Request for Continued Examination under 37 CFR 1.114.

P titioner is advised that the issue fee paid on October 20, 2003 in the above-id ntified application cannot be refunded. If, however, the above-identified application is again allowed, petitioner may request that it be applied towards the issue fee required by the new Notice of Allowance.[1]

Telephone inquiries should be directed to the undersigned at (703) 305-8680.

The file will be forwarded to Technology Center AU 2835 for processing of the request for continued examination under 37 CFR 1.114 and for consideration of the concurrently filed Information Disclosure Statement.

Frances Hicks
Petitions Examiner
Office of Petitions
Office of the Deputy Commissioner
for Patent Examination Policy

---

[1] The request to apply the issue fee to the new Notice may be satisfied by completing and returning the new Issue Fee Transmittal Form PTOL-85(b), which includes the following language thereon: "Commissioner for Patents is requested to apply the Issue Fee and Publication Fee (if any) or re-apply any previously paid issue fee to the application identified above." Petitioner is advised that, whether a fee is indicated as being due or not, the Issue Fee Transmittal Form **must** be completed and timely submitted to avoid abandonment. Note the language in bold text on the first page of the Notice of Allowance and Fee(s) Due (PTOL-85).

DEC 0 4 2003
PATENT & TRADEMARK OFFICE

IN THE UNITED STATES PATENT AND TRADEMARK OFFICE

In Re Application of:	
Rudd, et al	Group Art Unit: 2835
Serial No.: 09/975,292	Examiner: Datskovskiy, Michael
Filed: October 10, 2001	Docket No. 10010045-1
For: **System and Method for Personalizing an Electrical Device**	

PETITION TO WITHDRAW APPLICATION FROM ISSUE PURSUANT TO 37 C.F.R. 1.313(c)(2)

Commissioner for Patents
P.O. Box 1450
Alexandria, VA 22313-1450

Dear Sir:

Applicants hereby petition the Commissioner to withdraw the above-identified application from issue pursuant to 37 C.F.R. § 1.313(c)(2) in favor of a Request for Continued Examination (RCE) under 37 C.F.R. § 1.114. The issue fee in this application was timely paid on October 20, 2003. The fee required by § 1.313(a) as set forth in § 1.17(h) is appended hereto.

Included is an Information Disclosure Statement (IDS) that identifies newly discovered art. Applicant submits, however, that this new art does not negate the patentability of applicant's claims.

The Commissioner is authorized to charge Deposit Account No. 08-2025 for any additional fees required. The Commissioner is requested to credit any excess fee paid to Deposit Account No. 08-2025.

12/05/2003 AWONDAF1 00000050 082025 09975292
01 FC:1460 130.00 DA

Respectfully submitted,

David R. Risley
Registration No. 39,345

UNITED STATES PATENT AND TRADEMARK OFFICE

Commissioner for Patents
United States Patent and Trademark Office
P.O. Box 1450
Alexandria, VA 22313-1450
www.uspto.gov

COPY MAILED

DEC 08 2009

OFFICE OF PETITIONS

ARENT FOX LLP
1050 CONNECTICUT AVENUE, N.W.
SUITE 400
WASHINGTON DC 20036

In re Patent No. 6,986,050 :
Ari Hypponen :
Application No. 09/975,302 : NOTICE
Filed: October 12, 2001 :
Attorney Docket No. 108347-00011 :

This is a notice regarding your request for acceptance of a fee deficiency submission under 37 CFR 1.28.

The Office no longer investigates or rejects original or reissue patent under 37 CFR 1.56. **1098 Off. Gaz. Pat. Office 502 (January 3, 1989)**. Therefore, nothing in this Notice is intended to imply that an investigation was done.

Your fee deficiency submission under 37 CFR 1.28 is hereby **ACCEPTED**.

This patent is no longer entitled to small entity status. Accordingly, all future fees paid in this patent must be paid at the large entity rate.

There is no indication that the person signing the instant request was ever given a power of attorney or authorization of agent to prosecute the above-identified application. If the person signing the instant request desires to receive future correspondence regarding this patent, the appropriate power of attorney or authorization of agent must be submitted.

Inquiries related to this communication should be directed to the undersigned at (571) 272-3208.

/KOC/
Karen Creasy
Petitions Examiner
Office of Petitions

cc:

HARRINGTON & SMITH, PC
4 RESEARCH DRIVE
SHELTON, CT 06484-6212

UNITED STATES PATENT AND TRADEMARK OFFICE

COMMISSIONER FOR PATENTS
UNITED STATES PATENT AND TRADEMARK OFFICE
WASHINGTON, D.C. 20231
www.uspto.gov

Paper No. 6

SCOTT C. HARRIS
FISH & RICHARDSON P.C.
4350 LA JOLLA VILLAGE DRIVE, SUITE 500
SAN DIEGO, CA 92122

COPY MAILED

APR 04 2002

OFFICE OF PETITIONS

NOTICE

In re Application of :
Giuseppe Rossi :
Application No. 09/975,324 :
Filed: October 10, 2001 :
Attorney Docket No. 08305/115001 / 20-29 :

This is a notice regarding your request for acceptance of a fee deficiency submission under 37 CFR 1.28. On September 1, 1998, the Court of Appeals for the Federal Circuit held that 37 CFR 1.28(c) is the sole provision governing the time for correction of the erroneous payment of the issue fee as a small entity. **See DH Technology v. Synergystex International, Inc. 154 F.3d 1333, 47 USPQ2d 1865 (Fed. Cir. Sept. 1, 1998).**

The Office no longer investigates or rejects original or reissue applications under 37 CFR 1.56. **1098 Off. Gaz. Pat. Office 502 (January 3, 1989)**. Therefore, nothing in this Notice is intended to imply that an investigation was done.

Your fee deficiency submission under 37 CFR 1.28 is hereby **ACCEPTED**.

Inquiries related to this communication should be directed to the Office of Petitions Staff at (703) 305-9285.

This file is being forwarded to the Initial Patent Examination Unit.

Irvin Dingle
Petitions Examiner
Office of Petitions
Office of the Deputy Commissioner
for Patent Examination Policy

UNITED STATES PATENT AND TRADEMARK OFFICE

COMMISSIONER FOR PATENTS
UNITED STATES PATENT AND TRADEMARK OFFICE
WASHINGTON, D.C. 20231
www.uspto.gov

Paper No. 11

Scott C. Harris
FISH & RICHARDSON, PC
4350 LA JOLLA VILLAGE DRIVE
SUITE 500
SAN DIEGO, CA 92122

MAILED
MAR 25 2003
OFFICE OF DIRECTOR
GROUP

In re Application of:
ROSSI, GIUSEPPE
Application No. 09/975,324
Filed: October 10, 2001
For: AMPLIFIER WITH VARIABLE SIGNAL GAIN AND MATCHED GAIN BANDWIDTH

DECISION ON REQUEST TO WITHDRAW FROM RECORD

This is a decision on the request to withdraw as attorney of record under 37 C.F.R. § 1.36, filed December 27, 2002.

A grantable request to withdraw as attorney of record must be signed by every attorney seeking to withdraw or contain a clear indication that one attorney is signing on behalf of others. A request to withdraw will not be approved unless at least thirty (30) days would remain between the date of approval and the later of the expiration date of a time to file a response or the expiration date of the maximum time period that can be extended under 37 C.F.R. § 1.136(a).

The request meets all the above requirements. The request was signed by Scott C. Harris, an attorney of record in the above identified application. On December 11, 2002, the Office mailed an Office Action setting forth a three-month shortened statutory period for reply that is extendable by petition under 37 C.F.R. § 1.136(a) through June 11, 2003. As such, there is at least thirty (30) days remaining between the date of this decision and the expiration date of the maximum time period that can be extended under 37 C.F.R. § 1.136(a).

The request is approved.

The application currently has no attorney of record.

All future communications from the Office will be directed to Tom D'Amico, at the below-listed address until otherwise notified by applicant.

Inquiries related to this decision should be directed to Lissi Mojica Marquis at (703) 308-2260.

Lissi Mojica Marquis, Special Programs Examiner
Technology Center 2800
Semiconductors, Electrical and Optical
Systems and Components

cc: Micron Technology, Inc.
c/o Tom D'Amico
Dickstein, Shapiro, Moran & Oshinsky
2101 L Street NW
Washington, DC 20037-1526

UNITED STATES PATENT AND TRADEMARK OFFICE

Commissioner for Patents
United States Patent and Trademark Office
Washington, D.C. 20231
www.uspto.gov

Paper No. 3

Phyllis T. Turner-Brim
Cabot Microelectronics Corporation
870 Commons Drive
Aurora, IL 60504

COPY MAILED

JUN 03 2002

OFFICE OF PETITIONS

In re Application of	:	
Mingming Fang	:	
Application No. 09/975,335	:	DECISION GRANTING
Filed: October 11, 2001	:	PETITION
Attorney Docket No. 00042	:	

This is a decision on the petition filed March 25, 2002, requesting that the above-identified application be accorded a filing date of October 11, 2001, rather than the presently accorded date of October 10, 2001. The petition is properly treated as a petition under 37 CFR 1.10(c).

Petitioner alleges that the application was deposited in Express Mail Service on October 11, 2001. In support, a statement from Joan Howard, a U. S. Postal Service employee, accompanies the petition stating that the correct date-in should have been October 11, 2001. However, this statement is unacceptable. MPEP 513 states, in part:

> A petition alleging that the USPS erred in entering the "date-in" will be denied if it is supported only by evidence (other than from the USPS) which was:
>
> (A) created prior to the deposit of the correspondence as "Express Mail" with the USPS (e.g., an application transmittal cover letter, or a client letter prepared prior to the deposit of the correspondence); or
>
> (B) **created more than one business day after the deposit of the correspondence as "Express Mail" (e.g., an affidavit or declaration prepared more than one business day after the correspondence was deposited with the USPS as "Express Mail").**

The statement from Joan Howard, a USPS Sales Associate, is dated March 15, 2002, five months after the deposit of the application papers as "Express Mail." Hence, the evidence provided does not comply with the requirements set forth in MPEP 513.

Nevertheless, the Office has obtained records from the USPS corroborating petitioner's allegations that the application papers were, in fact, deposited as "Express Mail" on October 11, 2001 (copy enclosed). In view thereof, the petition is **GRANTED**.

This application file is being forwarded to the Office of Initial Patent Examination Division for further **processing with a filing date of October 11, 2001.** Thereafter, the application file will be forwarded to Technology Center 3723 for examination in due course.

Telephone inquiries concerning this matter may be directed to Marianne Morgan at (703) 306-3475.

Sherry Brinkley
Petitions Examiner
Office of Petitions
Office of the Deputy Commissioner
For Patent Examination Policy

ATTACHMENT: Copy of USPTO's USPS Express Mail Information Database

UNITED STATES PATENT AND TRADEMARK OFFICE

COMMISSIONER FOR PATENTS
UNITED STATES PATENT AND TRADEMARK OFFICE
P.O. BOX 1450
ALEXANDRIA, VA 22313-1450
www.uspto.gov

Paper No. 21

ROBERT T. HRUBIEC
CEPHALON, INC.
145 BRANDYWINE PARKWAY
WEST CHESTER PA 19380

COPY MAILED
DEC 03 2003
OFFICE OF PETITIONS

In re Application of :
Jacobs et al. :
Application No. 09/975,350 : ON PETITION
Filed: 11 October, 2001 :
Attorney Docket No. CP215 :

This is a decision on the petition under 37 CFR 1.137(b),[1] filed on 17 November, 2003, to revive the above-identified application.

The petition is **GRANTED**.

This application became abandoned on 8 July, 2003, for failure to file a proper reply to the final Office action mailed on 7 March, 2003, which set a three (3) month statutory period for reply. A one (1) month extension of time was filed on 18 June, 2003, along with an amendment after final rejection. The amendment did not

---

[1]Effective December 1, 1997, the provisions of 37 CFR 1.137(b) now provide that where the delay in reply was unintentional, a petition may be filed to revive an abandoned application or a lapsed patent pursuant to 37 CFR 1.137(b). A grantable petition filed under the provisions of 37 CFR 1.137(b) must be accompanied by:

(1) the required reply, unless previously filed. In a nonprovisional application abandoned for failure to prosecute, the required reply may be met by the filing of a continuing application. In a nonprovisional application filed on or after June 8, 1995, and abandoned for failure to prosecute, the required reply may also be met by the filing of a request for continued examination in compliance with § 1.114. In an application or patent, abandoned or lapsed for failure to pay the issue fee or any portion thereof, the required reply must be the payment of the issue fee or any outstanding balance thereof. In an application abandoned for failure to pay the publication fee, the required reply must include payment of the publication fee.

(2) the petition fee as set forth in 37 CFR 1.17(m);

(3) a statement that the entire delay in filing the required reply from the due date for the reply until the filing of a grantable petition pursuant to 37 CFR 1.137(b) was unintentional. The Commissioner may required additional information where there is a question whether the delay was unintentional; and

(4) any terminal disclaimer (and fee as set forth in 37 CFR 1.20(d)) required pursuant to 37 CFR 1.137(c)).

place the case in condition for allowance, and an Advisory Action was mailed on 8 July, 2003. Notice of Abandonment was mailed on 22 October, 2003.

On 17 November, 2003, the present petition was filed, accompanied by a Request for Continued Examination (RCE) and an amendment as the submission required under 37 CFR 1.114.

The application will be forwarded to Technology Center 1600 for consideration of the RCE and amendment.

Telephone inquiries concerning this matter may be directed to the undersigned at (703)308-6918.

D Wood

Douglas I. Wood
Senior Petitions Attorney
Office of Petitions

UNITED STATES PATENT AND TRADEMARK OFFICE

COMMISSIONER FOR PATENTS
UNITED STATES PATENT AND TRADEMARK OFFICE
P.O. BOX 1450
ALEXANDRIA, VA 22313-1450
www.uspto.gov

APR 14 2004

Emily Miao
McDonnell Boehnen Hulbert & Berghoff
32nd Floor
300 S. Wacker Drive
Chicago IL 60606

In re application of Chad A. Mirkin et al.	:
Serial No. : 09/975,384	: DECISION ON PETITION
Filed : October 11, 2001	:
Attorney Docket No.: 00-713-i13	:

This is in response to applicant's petition, filed November 25, 2003 under 37 CFR 1.181, to withdraw the holding of abandonment.

BACKGROUND

Review of the file history shows that the application was filed on October 11, 2001 under 35 U.S.C. 111(a). On October 31, 2001 the Office mailed a Notice to Comply with sequence rules. Applicants filed a sequence listing in paper and computer readable form on January 18, 2002. On October 29, 2003 the Office mailed a notice of abandonment for failure to reply to the notice of October 31, 2001.

DISCUSSION

Further review of the file history shows that the abandonment was withdrawn on November 5, 2003, though applicants were apparently not notified. It also appears that applicants were not notified that the computer readable form of the sequence listing submitted January 18, 2002 was damaged (see enclosed CRF problem report). Applicants have received an Office action on the merits, mailed November 17, 2003, which did not mention the problem with the sequence listing. In the interest of compact prosecution, it is suggested that applicants provide a new computer readable form of the sequence listing with their response to the outstanding Office action.

DECISION

Applicant's petition is **GRANTED**.

Any request for reconsideration or review of this decision must be made by a renewed petition and must be filed within TWO MONTHS of the mailing date of this decision in order to be considered timely.

Should there be any questions with regard to this letter please contact Bruce Campell by letter addressed to the Director, Technology Center 1600, P.O. Box 1450, Alexandria, VA, 22313-1450, or by telephone at (571) 272-0974 or by facsimile transmission at (571) 273-0974.

Jasemine C. Chambers

Jasemine Chambers
Director, Technology Center 1600

UNITED STATES PATENT AND TRADEMARK OFFICE

Commissioner for Patents
United States Patent and Trademark Office
P.O. Box 1450
Alexandria, VA 22313-1450
www.uspto.gov

DAVID W. ROUILLE
DALY, CROWLEY, MOFFORD & DURKEE, LLP
SUITE 301A
354A TURNPIKE STREET
CANTON MA 02021-2714

COPY MAILED
AUG 1 0 2006
OFFICE OF PETITIONS

In re Application of	:	
THOMAS MAYBERRY, et al	:	
Application No. 09/975,398	:	DECISION ON PETITION
Filed: October 11, 2001	:	UNDER 37 CFR 1.78(a)(6)
Attorney Docket No. EMPIR-028PUS	:	

This is a decision on the petition under 38 CFR 1.78(a)(2) filed April 5, 2006, which is being treated under 37 CFR 1.78(a)(6), to accept an unintentionally delayed claim under 35 U.S.C. §119(e) for the benefit of the prior-filed provisional application set forth in the concurrently filed amendment.

The petition is **GRANTED.**

A petition under 37 CFR 1.78(a)(6) is only applicable to those applications filed on or after November 29, 2000. Further, the petition is appropriate only after expiration of the period specified in 37 CFR 1.78(a)(5)(ii) and must be filed during the pendency of the nonprovisional application. In addition, the petition must be accompanied by:

(1) the reference required by 35 U.S.C. § 119(e) and 37 CFR 1.78(a)(5)(i) to the prior-filed application, unless previously submitted;
(2) the surcharge set forth in § 1.17(t); and
(3) a statement that the entire delay between the date the claim was due under 37 CFR 1.78(a)(5)(ii) and the date the claim was filed was unintentional. The Director may require additional information where there is a question whether the delay was unintentional.

Additionally, the instant nonprovisional application must be pending at the time of filing of the reference to the prior-filed provisional application as required by 37 CFR 1.78(a)(5)(ii). Further, the nonprovisional application claiming the benefit of the prior-filed provisional application must have been filed within twelve months of the filing date of the prior-filed provisional application.

37 CFR § 1.78(a)(6) requires a statement that the entire delay between the date the claim was due under 37 CFR § 1.78(a)(5)(ii) and the date the claim was filed was unintentional. Since the statement appearing in the petition varies from the required language, the statement is being

construed as the statement required by 37 CFR §1.78(a)(6). If this is not a correct reading of the statement appearing in the petition, petitioner should promptly notify the Office.

All of the above requirements having been satisfied, the late claim for priority under 35 U.S.C. § 119(e) is accepted as being unintentionally delayed.

The granting of the petition to accept the delayed benefit claim to the prior-filed application under 37 CFR 1.78(a)(6) should not be construed as meaning that this application is entitled to the benefit of the filing date of the prior-filed application. In order for this application to be entitled to the benefit of the prior-filed application, all other requirements under 35 U.S.C. §119(e) and 37 CFR 1.78(a)(4) and (a)(5) must be met. Similarly, the fact that the corrected Filing Receipt accompanying this decision on petition includes the prior-filed application should not be construed as meaning that applicant is entitled to the claim for benefit of priority to the prior-filed application noted thereon. Accordingly, the examiner will, in due course, consider this benefit claim and determine whether the application is entitled to the benefit of the earlier filing date.

A corrected Filing Receipt, which includes the priority claim to the prior-filed provisional application, accompanies this decision on petition.

A review of the file record shows a Revocation of Power of Attorney and Appointment of New Power of Attorney form filed on March 21, 2005. In this regard, this revocation and new power of attorney is not acceptable, and all correspondence continues to be directed to the address above.

Any inquiries concerning this decision may be directed to Amelia Au at (571) 272-7414. All other inquiries concerning either the examination procedures or status of the application should be directed to the Technology Center.

The application is being forwarded to Technology Center AU 2157 for consideration by the examiner of the claim under 35 U.S.C. §119(e) for the benefit of priority to the prior-filed provisional application.

Frances Hicks
Lead Petitions Examiner
Office of Petitions

ATTACHMENT: Corrected Filing Receipt

Cc: DAVID W. ROUILLE
CHAPIN INTELLECTUAL PROPERTY LAW, LLC.
WESTBOROUGH OFFICE PARK
1700 WEST PARK DRIVE
WESTBOROUGH, MA 01581

SPE RESPONSE FOR CERTIFICATE OF CORRECTION

Paper No.: X

DATE : July 22, 2008

TO SPE OF : ART UNIT 1615

SUBJECT : Request for Certificate of Correction for Appl. No.: 09/975418 Patent No.: 7070800 B2

A response is requested with respect to a request for a certificate of correction.

With respect to the change(s) requested to correct Office and/or Applicant's errors, should the patent read as shown in the certificate of correction attached herewith or the COCIN document(s), in IFW images for the above-identified patented application? No new matter should be introduced, nor should the scope or meaning of the claims be changed.

If the response is for an IFW, within **7** days, please complete and forward the response, to the employee (named below) via scanning into application images, using document code **COCX**.

DO NOT SENT TO ATTORNEY

If the response is for a paper file wrapper, please complete the response and forward the response with the paper file wrapper, to the employee (named below), within **7** days, to:

Certificates of Correction Branch (CofC)
South Tower - 9A22
Palm Location 7580

You can fax the Directors/SPE response to 571-270-9990

LAMONTE NEWSOME
Certificates of Correction Branch
703-308-9390 ext. 112

Thank You For Your Assistance

The request for issuing the above-identified correction(s) is hereby:
Note your decision on the appropriate box.

XApproved	**All** changes apply.
☐ **Approved in Part**	Specify below which changes **do not** apply.
☐ **Denied**	State the reasons for denial below.

Comments: The changes involve matters of form which do not effect the claimed invention.

SPE RESPONSE FOR CERTIFICATE OF CORRECTION

SPE Art Unit

UNITED STATES PATENT AND TRADEMARK OFFICE

COMMISSIONER FOR PATENTS
UNITED STATES PATENT AND TRADEMARK OFFICE
P.O. BOX 1450
ALEXANDRIA, VA 22313-1450
www.uspto.gov

Paper No. 12

SECOND SIGHT, LLC
P.O. BOX 905
SANTA CLARITA, CA 91380-9005

COPY MAILED

JAN 3 0 2004

OFFICE OF PETITIONS

In re Application of
Little et al.
Application No. 09/975,427
Filed: October 10, 2001
Attorney Docket No. S145-USA

ON PETITION

This is a decision on the petition under 37 C.F.R. § 1.137(b), filed January 6, 2004, to revive the above-identified application.

The petition is **granted.**

This application became abandoned for failure to timely reply within three months to the final Office action mailed July 1, 2003. No extensions of time under the provisions of 37 CFR 1.136(a) were obtained. Accordingly, this application became abandoned on October 2, 2003. A Notice of Abandonment was mailed on January 9, 2004.

Petitioner has met the requirements to revive the above-identified application pursuant to 37 CFR 1.137(b).

The Notice of Appeal filed January 6, 2004, has been entered and made of record. Accordingly, the 2-month period for filing the appeal brief, in triplicate, accompanied by the fee required by law, runs from the date of this decision.

The Terminal Disclaimer filed on January 6, 2004 is not required since the application was not filed prior to June 8, 1995. Therefore, the Terminal Disclaimer has not been accepted and will not be entered, but will be placed in the application file.

The file does not indicate a change of address has been submitted, although the address given on the petition differs from the address of record. If appropriate, a request to change the address of record should be filed. A courtesy copy of this decision is being mailed to the address given on the petition; however, the Office will mail all future correspondence solely to the address of record.

The file is now being forwarded to Technology Center 3700 for further processing.

Telephone inquiries should be directed to Paralegal Liana Chase at (703) 306-0482.

Wan Laymon
Petitions Examiner
Office of Petitions
Office of the Deputy Commissioner
for Patent Examination Policy

cc: Scott B. Dunbar
12744 San Fernando Road, Building 3
Sylmar, CA 91342

UNITED STATES PATENT AND TRADEMARK OFFICE

COMMISSIONER FOR PATENTS
UNITED STATES PATENT AND TRADEMARK OFFICE
P.O. BOX 1450
ALEXANDRIA, VA 22313-1450
www.uspto.gov

Second Sight, LLC
P.O. Box 905
Santa Clarita, CA 91380-9005

COPY MAILED

DEC 08 2005

OFFICE OF PETITIONS

In re Application of : ON PETITION
Little et al. :
Application No. 09/975,427 :
Filed: October 10, 2001 :
Atty Docket No. S145-USA :

This is a decision in response to the petition under 37 CFR 1.137(b), filed July 21, 2005, to revive the above-identified application.

The petition is **dismissed**.

Any further petition to revive the above-identified application must be submitted within TWO (2) MONTHS from the mail date of this decision. Extensions of time under 37 CFR 1.136(a) are permitted. The reconsideration request should include a cover letter entitled "Renewed Petition under 37 CFR 1.137." This is **not** final agency action within the meaning of 5 U.S.C. § 704.

The above-identified application became abandoned for failure to file a complete and proper appeal brief after filing a Notice of Appeal. Applicant filed a Notice of Appeal on January 6, 2004. Thereafter, Applicant was given two (2) months within which to file an appeal brief. Extensions of time under 37 CFR 1.136 were available. Applicant filed an appeal brief on March 18, 2004; however, the appeal brief failed to comply with the requirements of 37 CFR 1.192(c). Applicant was so notified in a Notice of Non-Compliant Amendment ("Notice"), mailed June 14, 2004. The Notice informed Applicant that a reply must to the Notice must have been filed within the longest of three (3) periods: 1) one month or 30 days from the mailing of the Notice; 2) two months from the mailing of the Notice of Appeal, or 3) within the period for reply to the [final rejection]. Applicant failed to timely and/or properly reply to the Notice. Since no claims were allowed, the appeal was dismissed, and the proceedings as to the rejected claims were terminated, the

application became abandoned on March 6, 2004[1]. See, 37 CFR 1.192 and MPEP 1206[2].

Applicant files the instant petition and an appeal brief.

Applicable Law

A grantable petition to revive an abandoned application under 37 CFR 1.137(b) must be accompanied by: (**1**) the required reply (unless previously filed); (**2**) the petition fee required by 37 CFR 1.17(m); (**3**) a statement that the entire delay in filing the required reply from the due date for the reply until the filing of a grantable petition pursuant to 37 CFR 1.137(b) was unintentional; and (**4**) if required, a terminal disclaimer (and fee as set forth in 37 CFR 1.20(d)). Applicant lacks item (**1**).

As to item (**1**), Applicant has failed to file a proper reply. A proper reply to a final Office action includes 1) a Notice of Appeal and fee; 2) a continuing application; 3) an amendment or request for reconsideration which places the application in condition for allowance brief.

As such, the appeal brief is not a proper reply to the final Office action.

Applicant is further advised that any brief filed on or after September 13, 2004 must comply with the requirements set forth in 37 CFR 41.37 and accompanied by the fee under 37 CFR 41.20(b)(2), unless the brief has a certificate of mailing date before September 13, 2004. Accord MPEP 1205.02 Rev. 3, August 2005.

Further correspondence with respect to this matter should be addressed as follows:

---

[1] If there are no allowed claims, the application is abandoned as of the date the brief was due. If the time for filing a brief has passed and the application has consequently become abandoned, the applicant may petition to revive the application, as in other cases of abandonment, and to reinstate the appeal; if the appeal is dismissed, but the application is not abandoned, the petition would be to reinstate the claims and the appeal, but a showing equivalent to that in a petition to revive under 37 CFR 1.137 is required. In either event, a proper brief must be filed before the petition will be considered on its merits. (Emphasis supplied).

[2] Although failure to file the brief within the permissible time will result in dismissal of the appeal, if any claims stand allowed, the application does not become abandoned by the dismissal, but is returned to the examiner for action on the allowed claims. See MPEP § 1215.04.

By mail: Commissioner for Patents
PO Box 1450
Alexandria, VA 22313-1450

By FAX: (571) 273-8300
Attn: Office of Petitions

By hand: Customer Service Window
Randolph Building
401 Dulany Street
Alexandria, VA 22314

Telephone inquiries concerning this matter should be directed to the undersigned at (571) 272-3232.

Derek L. Woods
Attorney
Office of Petitions

UNITED STATES PATENT AND TRADEMARK OFFICE

Commissioner for Patents
United States Patent and Trademark Office
P.O. Box 1450
Alexandria, VA 22313-1450
www.uspto.gov

Second Sight, LLC
P.O. Box 905
Santa Clarita, CA 91380-9005

COPY MAILED

MAY 17 2006

OFFICE OF PETITIONS

In re Application of	: ON PETITION
Little et al.	:
Application No. 09/975,427	:
Filed: October 10, 2001	:
Atty Docket No. S145-USA	:

This is a decision in response to the petition under 37 CFR 1.137(b), filed July 21, 2005, to revive the above-identified application.

The petition is **granted**.

The above-identified application became abandoned for failure to file a complete and proper appeal brief after filing a Notice of Appeal. Applicant filed a Notice of Appeal on January 6, 2004. Thereafter, Applicant was given two (2) months within which to file an appeal brief. Extensions of time under 37 CFR 1.136 were available. Applicant filed an appeal brief on March 18, 2004; however, the appeal brief failed to comply with the requirements of 37 CFR 1.192(c). Applicant was so notified in a Notice of Non-Compliant Amendment ("Notice"), mailed June 14, 2004. The Notice informed Applicant that a reply must to the Notice must have been filed within the longest of three (3) periods: 1) one month or 30 days from the mailing of the Notice; 2) two months from the mailing of the Notice of Appeal, or 3) within the period for reply to the [final rejection]. Applicant failed to timely and/or properly reply to the Notice. Since no claims were allowed, the appeal was dismissed, and the proceedings as to the rejected claims were terminated, the application became abandoned on March 6, 2004[1]. See, 37 CFR 1.192 and MPEP 1206[2].

---

[1] If there are no allowed claims, the application is abandoned as of the date the brief was due. If the time for filing a brief has passed and the application has consequently become abandoned, the applicant may petition to revive the application, as in other cases of abandonment, and to reinstate

Applicant files the instant petition and continuation application.

Having found that all requirements for the filing of a grantable petition under 37 C.F.R. §1.137(b) have been met, this Petition is hereby **Granted**.

This application is being revived for purposes of continuity only and since continuity has been established by this decision reviving the application, the application is again abandoned in favor of the Continuation Application, No. 11/352,168, filed February 13, 2006.

This application is being referred to the files repository.

Telephone inquiries concerning this matter should be directed to the undersigned at 571-272-3232.

Derek L. Woods
Attorney
Office of Petitions

---

the appeal; if the appeal is dismissed, but the application is not abandoned, the petition would be to reinstate the claims and the appeal, but a showing equivalent to that in a petition to revive under 37 CFR 1.137 is required. In either event, a proper brief must be filed before the petition will be considered on its merits. (Emphasis supplied).

[2] Although failure to file the brief within the permissible time will result in dismissal of the appeal, if any claims stand allowed, the application does not become abandoned by the dismissal, but is returned to the examiner for action on the allowed claims. See MPEP § 1215.04.

UNITED STATES PATENT AND TRADEMARK OFFICE

COMMISSIONER FOR PATENTS
UNITED STATES PATENT AND TRADEMARK OFFICE
WASHINGTON, D.C. 20231
www.uspto.gov

Paper No. 7

DAVID ROZENBLAT
BRINKS HOFER GILSON & LIONE
P.O. BOX 10395
CHICAGO IL 60610

COPY MAILED

AUG 1 4 2002

OFFICE OF PETITIONS

In re Application of :
Andrew Ernest Fano :
Application No. 09/975,460 : ON PETITION
Filed: October 10, 2001 :
Attorney Docket No. 10022/187 :

This is a decision on the petition filed January 22, 2002, requesting that the above-identified application be accorded a filing date of October 10, 2001.

On October 10, 2001, applicant filed the above-identified application, which is a continuation application under 37 CFR 1.53(b) of prior application, No. 09/259,902, filed February 26, 1999. This continuation application included, inter alia, a complete copy of the prior application, and a transmittal letter. The transmittal letter contained an instruction to "[c]ancel in this application original claims 1-19 of the prior application and otherwise enter the attached preliminary amendment before calculating the filing fee. (At least one original independent claim must be retained for filing purposes)." As indicated in the present petition, applicant did not file a preliminary amendment with the application papers on October 10, 2001. Thereafter, on January 7, 2002, applicant submitted a preliminary amendment, which contained instructions to delete claims 1-19 but add 22 new claims prior to examination on the merits.

On November 21, 2001, the Office of Initial Patent Examination mailed a Notice of Incomplete Nonprovisional Application (Notice), stating that a filing date had not been accorded to the present application because the specification did not include at least one claim as prescribed by 35 U.S.C. § 112.

In response, on January 22, 2002, applicants filed the present petition requesting the application be accorded a filing date of October 10, 2001. Applicant's attorney stated that the application was filed with the Amendment Instruction Box inadvertently and erroneously checked to instruct the cancellation of all of the claims. The attorney stated that he intended to cancel the claims only when the later preliminary amendment was filed. Furthermore, applicant's attorney indicated that the instruction of the Amendment Instruction Box did not

permit the United States Patent and Trademark Office to cancel all of the claims in the application. Applicant's attorney argued the instructions stated that at least one original independent claim must be retained for filing purposes. Moreover, the attorney asserted: "Since a preliminary amendment was not enclosed with the continuation application, and could therefore not be entered, the Patent and Trademark Office should therefore have recognized the impossibility of following the instructions as written." *Petition dated January 22, 2002, p. 4.* "The Patent and Trademark Office should therefore have ignored the instructions and left all of the original claims 1-19 in the application as filed." Id.

The Office notes that in Exxon Corp. v. Phillips Petroleum Co., 265 F.3d 1249, 60 USPQ2d 1368 (Fed. Cir. 2001), the Federal Circuit affirmed that the United States Patent and Trademark Office (Office) may refuse to enter an improper amendment that would cancel all of the claims in an application to avert harm (loss of a filing date) to an applicant. Consistent with Exxon, the Office will deny entry of any amendment that seeks cancellation of all claims but does not present any new or substitute claims. For fee calculation purposes, however, the Office will treat such an application as containing a single claim.

Applicant's instruction to cancel claims 1 through 19, the only claims pending in the application, is improper. A patent application must contain at least one claim pursuant to 35 U.S.C. § 112. Accordingly, the Office will not enter the improper amendment. The Notice of Incomplete Nonprovisional Application is hereby vacated.

Accordingly, the petition is granted. The petition fee of $130.00 is unnecessary and will be credited to Deposit Account No. 23-1925.

The application will be forwarded to the Office of Initial Patent Examination for further processing to correct the filing date to October 10, 2001, as well as to indicate in the record that the application was filed with a total of one (1) total claim, including a single independent claim. Thereafter, the application will be forwarded to Technology Center 3600 for examination in due course.

Any inquiries related to this decision should be directed to Senior Petitions Attorney Christina Tartera Donnell at (703) 306-5589.

Eugenia A. Jones

Eugenia A. Jones
Senior Legal Advisor
Office of Patent Legal Administration
Office of the Deputy Commissioner
for Patent Examination Policy

SPE RESPONSE FOR CERTIFICATE OF CORRECTION

Paper No.: _____

DATE : 7-17-08

TO SPE OF : ART UNIT 3738

SUBJECT : Request for Certificate of Correction on Patent No.: 6863688/09/955471

A response is requested with respect to the accompanying request for a certificate of correction.

Please complete this form and return with file, within **7** days to:
Palm location **7580, Certificates of Correction Branch – South Tower – 9A22**
If response is for an IFW, **return to employee (named below) via PUBSCofC Team in MADRAS.**
With respect to the change(s) requested, correcting Office and/or Applicant's errors, should the patent read as shown in the certificate of correction (COCIN)? No new matter should be introduced, nor should the scope or meaning of the claims be changed.

Should Reg. be granted?

Eva James

Thank You For Your Assistance

Certificates of Correction Branch
Tel. No. 703-305-8309

The request for issuing the above-identified correction(s) is hereby:
Note your decision on the appropriate box.

- ☐ **Approved** — **All** changes apply.
- ☐ **Approved in Part** — Specify below which changes **do not** apply.
- ☒ **Denied** — State the reasons for denial below.

Comments:

The change in claim to priority requires new considerations.

/Corrine McDermott/
SPE

3738
Art Unit

10-27-08

UNITED STATES DEPARTMENT OF COMMERCE
Patent and Trademark Office
ASSISTANT SECRETARY OF COMMERCE AND
COMMISSIONER OF PATENTS AND TRADEMARKS
Washington, D.C. 20231

Patent No. : 6,863,688
Inventor(s) : James d. Ralph, et. al.
Issued : March 8, 2005
For: METHOD AND APPARATUS FOR EARLY WRITE TERMINATION IN A SEMICONDUTOR MEMORY

Request for Certificate of Correction

Consideration has been given your request for the issuance of a certificate of correction under Rule 1.322.

On the title page, item [63], the change cannot be made because the change in claim to priority requires new considerations per say Corrine McDermott (art unit) 3738, 571-272-4754.

In view of the foregoing, your request is hereby denied.

Eva James
For Mary Diggs
Decisions & Certificate
of Correction Branch
(703) 308-9390 ext.124 or 125

Brian R. Tomkins
Lerner, David, Littenberg, Krumholz & Mentlik, LLP
600 South Avenue West
Westfield, New Jersey 07090

ej

UNITED STATES PATENT AND TRADEMARK OFFICE

Commissioner for Patents
United States Patent and Trademark Office
P.O. Box 1450
Alexandria, VA 22313-1450
www.uspto.gov

LERNER, DAVID, LITTENBERG,
KRUMHOLZ & MENTLIK
600 SOUTH AVENUE WEST
WESTFIELD, NJ 07090

MAILED

MAR 11 2010

OFFICE OF PETITIONS

In re Patent No. 6,863,688	:
Issue Date: March 8, 2005	: DECISION GRANTING PETITION
Application No. 09/975,471	: UNDER 37 CFR 1.78(a)(3) AND
Filed: October 11, 2001	: REQUEST FOR CERTIFICATE OF
Attorney Docket No. SPINE 3.0-436 CIP CIP CIP	: CORRECTION
	:

This is a decision on the petition, filed November 17, 2008, which is being treated as a petition under 37 CFR 1.78(a)(3), seeking to add a claim for priority under 35 U.S.C. § 120 to nonprovisional Application No. 09/968,046, filed October 1, 2001, by way of a certificate of correction. The delay in responding is sincerely regretted.

The petition is **granted**.

A review of the file record fails to disclose that a claim for the benefit of priority to the above-noted, prior-filed nonprovisional application was made within the time period set forth in 37 CFR 1.78(a)(2)(ii) and further failed to include a proper reference to the prior-filed application as required by 37 CFR 1.78(a)(2)(i) and 1.78(a)(2)(iii).

The instant application was filed October 11, 2001. Therefore, since this application was filed after November 29, 2000, a petition under 37 CFR 1.78(a)(3), along with submission of a Certificate of Correction, is the appropriate avenue of relief to accept a late claim for the benefit of priority to a prior-filed nonprovisional application after issuance of the application into a patent. *See* MPEP 1481.

A petition for acceptance of a claim for late priority under 37 CFR 1.78(a)(3) must be accompanied by:

(1) the reference required by 35 U.S.C. § 120 and 37 CFR 1.78(a)(2)(i) of the prior-filed application, unless previously submitted;
(2) the surcharge set forth in § 1.17(t); and
(3) a statement that the entire delay between the date the claim was due under 37 CFR 1.78(a)(2)(ii) and the date the claim was filed was unintentional. The Director may require additional information where there is a question whether the delay was unintentional.

As the petition for acceptance of an unintentionally delayed claim for the benefit of priority under 35 U.S.C. § 120 to the above-noted, prior-filed nonprovisional application satisfies the conditions of 37 CFR 1.78(a)(3), the petition is granted.

A corrected Filing Receipt, which includes the priority claim to the above-noted, prior-filed nonprovisional application, accompanies this decision on petition.

Petitioner is advised that the granting of this petition and the mailing of a corrected Filing Receipt should not be viewed as an indication that a determination has been made that this application is entitled to claim benefit of the prior-filed application. A determination that applicant is entitled to claim benefit of the prior-filed application will be made by the Examiner prior to the mailing of a certificate of correction.

It is noted that the $1,410 surcharge fee and the $100 certificate of correction fee were paid on November 17, 2008.

This application is being referred to the Certificates of Correction Branch for processing the request for a certificate of correction in accordance with this decision on the petition under 37 CFR 1.78(a)(3).

Any inquiries concerning this decision may be directed to the undersigned at (571) 272-3226.

Andrea Smith
Petitions Examiner
Office of Petitions

ATTACHMENT: Corrected Filing Receipt

UNITED STATES PATENT AND TRADEMARK OFFICE

UNITED STATES DEPARTMENT OF COMMERCE
United States Patent and Trademark Office
Address: COMMISSIONER FOR PATENTS
P.O. Box 1450
Alexandria, Virginia 22313-1450
www.uspto.gov

APPLICATION NUMBER	FILING or 371(c) DATE	GRP ART UNIT	FIL FEE REC'D	ATTY.DOCKET.NO	TOT CLAIMS	IND CLAIMS
09/975,471	10/11/2001	3738	670	SPINE 3.0-436 CIP CIP CIP	20	2

CONFIRMATION NO. 9649

CORRECTED FILING RECEIPT

530
LERNER, DAVID, LITTENBERG,
KRUMHOLZ & MENTLIK
600 SOUTH AVENUE WEST
WESTFIELD, NJ 07090

OC000000040490915

Date Mailed: 03/09/2010

Receipt is acknowledged of this non-provisional patent application. The application will be taken up for examination in due course. Applicant will be notified as to the results of the examination. Any correspondence concerning the application must include the following identification information: the U.S. APPLICATION NUMBER, FILING DATE, NAME OF APPLICANT, and TITLE OF INVENTION. Fees transmitted by check or draft are subject to collection. Please verify the accuracy of the data presented on this receipt. **If an error is noted on this Filing Receipt, please submit a written request for a Filing Receipt Correction. Please provide a copy of this Filing Receipt with the changes noted thereon. If you received a "Notice to File Missing Parts" for this application, please submit any corrections to this Filing Receipt with your reply to the Notice. When the USPTO processes the reply to the Notice, the USPTO will generate another Filing Receipt incorporating the requested corrections**

Applicant(s)

James D. Ralph, Seaside Park, NJ;
Stephen Tatar, Montvale, NJ;

Power of Attorney: The patent practitioners associated with Customer Number 000530

Domestic Priority data as claimed by applicant

This application is a CIP of 09/970,479 10/04/2001 PAT 6,669,730
which is a CIP of 09/968,046 10/01/2001 ABN

Foreign Applications

If Required, Foreign Filing License Granted: 10/23/2001

The country code and number of your priority application, to be used for filing abroad under the Paris Convention, is **US 09/975,471**

Projected Publication Date: Not Applicable

Non-Publication Request: No

Early Publication Request: No

Title

INTERVERTEBRAL SPACER DEVICE UTILIZING A SPIRALLY SLOTTED BELLEVILLE WASHER HAVING RADIALLY SPACED CONCENTRIC GROOVES

Preliminary Class

623

PROTECTING YOUR INVENTION OUTSIDE THE UNITED STATES

Since the rights granted by a U.S. patent extend only throughout the territory of the United States and have no effect in a foreign country, an inventor who wishes patent protection in another country must apply for a patent in a specific country or in regional patent offices. Applicants may wish to consider the filing of an international application under the Patent Cooperation Treaty (PCT). An international (PCT) application generally has the same effect as a regular national patent application in each PCT-member country. The PCT process **simplifies** the filing of patent applications on the same invention in member countries, but **does not result** in a grant of "an international patent" and does not eliminate the need of applicants to file additional documents and fees in countries where patent protection is desired.

Almost every country has its own patent law, and a person desiring a patent in a particular country must make an application for patent in that country in accordance with its particular laws. Since the laws of many countries differ in various respects from the patent law of the United States, applicants are advised to seek guidance from specific foreign countries to ensure that patent rights are not lost prematurely.

Applicants also are advised that in the case of inventions made in the United States, the Director of the USPTO must issue a license before applicants can apply for a patent in a foreign country. The filing of a U.S. patent application serves as a request for a foreign filing license. The application's filing receipt contains further information and guidance as to the status of applicant's license for foreign filing.

Applicants may wish to consult the USPTO booklet, "General Information Concerning Patents" (specifically, the section entitled "Treaties and Foreign Patents") for more information on timeframes and deadlines for filing foreign patent applications. The guide is available either by contacting the USPTO Contact Center at 800-786-9199, or it can be viewed on the USPTO website at http://www.uspto.gov/web/offices/pac/doc/general/index.html.

For information on preventing theft of your intellectual property (patents, trademarks and copyrights), you may wish to consult the U.S. Government website, http://www.stopfakes.gov. Part of a Department of Commerce initiative, this website includes self-help "toolkits" giving innovators guidance on how to protect intellectual property in specific countries such as China, Korea and Mexico. For questions regarding patent enforcement issues, applicants may call the U.S. Government hotline at 1-866-999-HALT (1-866-999-4158).

LICENSE FOR FOREIGN FILING UNDER

Title 35, United States Code, Section 184

Title 37, Code of Federal Regulations, 5.11 & 5.15

GRANTED

The applicant has been granted a license under 35 U.S.C. 184, if the phrase "IF REQUIRED, FOREIGN FILING LICENSE GRANTED" followed by a date appears on this form. Such licenses are issued in all applications where

the conditions for issuance of a license have been met, regardless of whether or not a license may be required as set forth in 37 CFR 5.15. The scope and limitations of this license are set forth in 37 CFR 5.15(a) unless an earlier license has been issued under 37 CFR 5.15(b). The license is subject to revocation upon written notification. The date indicated is the effective date of the license, unless an earlier license of similar scope has been granted under 37 CFR 5.13 or 5.14.

This license is to be retained by the licensee and may be used at any time on or after the effective date thereof unless it is revoked. This license is automatically transferred to any related applications(s) filed under 37 CFR 1.53(d). This license is not retroactive.

The grant of a license does not in any way lessen the responsibility of a licensee for the security of the subject matter as imposed by any Government contract or the provisions of existing laws relating to espionage and the national security or the export of technical data. Licensees should apprise themselves of current regulations especially with respect to certain countries, of other agencies, particularly the Office of Defense Trade Controls, Department of State (with respect to Arms, Munitions and Implements of War (22 CFR 121-128)); the Bureau of Industry and Security, Department of Commerce (15 CFR parts 730-774); the Office of Foreign AssetsControl, Department of Treasury (31 CFR Parts 500+) and the Department of Energy.

NOT GRANTED

No license under 35 U.S.C. 184 has been granted at this time, if the phrase "IF REQUIRED, FOREIGN FILING LICENSE GRANTED" DOES NOT appear on this form. Applicant may still petition for a license under 37 CFR 5.12, if a license is desired before the expiration of 6 months from the filing date of the application. If 6 months has lapsed from the filing date of this application and the licensee has not received any indication of a secrecy order under 35 U.S.C. 181, the licensee may foreign file the application pursuant to 37 CFR 5.15(b).

UNITED STATES PATENT AND TRADEMARK OFFICE

Commissioner for Patents
United States Patent and Trademark Office
P.O. Box 1450
Alexandria, VA 22313-1450
www.uspto.gov

MAR 10 2005

In re Application of :
Wallace J. Parce, et al :
Serial No. 09/975,500 :
Filed: 10/11/2001 :
For: HIGH THROUGHPUT SCREENING ASSAYS
SYSTEMS IN MICROSCALE FLUIDIC DEVICES

NOTICE OF WITHDRAWAL
FROM ISSUE
UNDER 37 CFR 1.313

The purpose of this communication is to inform you that the above-identified application is being withdrawn from issue pursuant to 37 CFR 1.313.

The application is being withdrawn to due to possible Interference. The examiner therefor will communicate the reasons to you.

The issue fee is refundable upon written request. If, however, the application is again found allowable, the issue fee can be applied toward payment of the issue fee in the amount identified on the new Notice of Allowance and Issue Fee Due upon written request. This request and any balance due must be received on or before the due date noted in the new Notice of Allowance in order to prevent abandonment of the application.

Telephone inquiries should be directed to Long Le
(571) 272-0823.

Jasemine C. Chambers

Jasemine C. Chambers, Director
Technology Center 1600

CALIPER LIFE SCIENCE, INC
506 FAIRCHILD DRIVE
MOUNTAIN VIEW, CA 94043-2234

UNITED STATES PATENT AND TRADEMARK OFFICE

Commissioner for Patents
United States Patent and Trademark Office
P.O. Box 1450
Alexandria, VA 22313-1450
www.uspto.gov

McAndrews, Held & Malloy, Ltd.
34th Floor
500 W. Madison Street
Chicago IL 60661

COPY MAILED

JUN 26 2007

OFFICE OF PETITIONS

In re Application of
Kapoor, et al.
Application No. 09/975,518
Filed: October 11, 2001
Attorney Docket No. 11722US02
For: METHOD AND APPARATUS FOR INTERFERENCE SUPPRESSION IN ORTHOGONAL FREQUENCY DIVISION MULTIPLEXED (OFDM) WIRELESS COMMUNICATION SYSTEMS

ON PETITION

This is a decision on the petition under 37 CFR 1.181, filed May 8, 2007, requesting that the Office withdraw the holding of abandonment of the above-identified application.

The petition under 37 CFR 1.181 is **GRANTED**.

This application was held abandoned for failure to respond in a timely manner to the non-final Office action, mailed October 27, 2005, which set forth an extendable three (3) month period for reply. The Office contended that this application became abandoned on January 28, 2005 for failure to reply to the October 27, 2005 non-final Office action. A Notice of Abandonment was mailed on March 20, 2007.

Petitioners request withdrawal of the holding of abandonment based on the assertion that a request for a one month extension of time, terminal disclaimer, and an amendment were timely received in the Office on February 10, 2006. The undersigned finds this argument completely convincing, as these documents are present in the application file and Office financial records shows that the required one month extension of time and terminal disclaimer fees were charged on mailroom date February 10, 2006. Therefore, a reply to the October 27, 2005 non-final Office action was timely filed.

The petition under 37 CFR 1.181 is **granted**, the holding of abandonment is withdrawn, and the March 20, 2007 Notice of Abandonment is **vacated**. No petition fee has been or will be charged in connection with this matter.

Accordingly, the application file will be forwarded to Technology Center A.U. 2616 for consideration of the amendment and terminal disclaimer filed on February 10, 2006.

Telephone inquiries pertaining to this matter may be directed to the undersigned at (571) 272-3230.

Shirene Willis Brantley

Shirene Willis Brantley
Senior Petitions Attorney
Office of Petitions
Office of the Deputy Commissioner
for Patent Examination Policy

UNITED STATES PATENT AND TRADEMARK OFFICE

Commissioner for Patents
United States Patent and Trademark Office
P.O. Box 1450
Alexandria, VA 22313-1450
www.uspto.gov

HAMILTON, BROOK, SMITH & REYNOLDS, P.C.
530 VIRGINIA ROAD
P.O. BOX 9133
CONCORD MA 01742-9133

COPY MAILED

JUL 15 2008

OFFICE OF PETITIONS

In re Application of :
Kapoor, et al. :
Application No. 09/975,518 :
Filed: October 11, 2001 :
Attorney Docket No. 2376.2171-001 :
For: METHOD AND APPARATUS FOR INTERFERENCE SUPPRESSION IN ORTHOGONAL FREQUENCY DIVISION MULTIPLEXED (OFDM) WIRELESS COMMUNICATION SYSTEMS

ON PETITION

This is a decision on the petition under 37 CFR 1.181, filed April 17, 2008 (certificate of mailing date April 15, 2008), requesting that the Office withdraw the holding of abandonment of the above-identified application.

The petition under 37 CFR 1.181 is **GRANTED**.

Per the Notice of Abandonment, mailed April 8, 2008, this application was held abandoned for failure to respond in a timely manner to the non-final Office action, mailed October 27, 2005, which set forth an extendable three (3) month period for reply. However, a petition to withdraw the holding of abandonment based on failure to reply to the October 27, 2005 non-final Office action was granted on ***June 26, 2007***.

Applicants responded to the Notice of Non-Compliant Amendment, mailed July 27, 2007 in a timely manner on August 30, 2007 (certificate of mailing date August 27, 2007). Thus, the application is not abandoned.

The petition under 37 CFR 1.181 is **granted**, the holding of abandonment is withdrawn, and the April 8, 2008 Notice of Abandonment is **vacated**. No petition fee has been or will be charged in connection with this matter.

After the mailing of this decision, the application file will be forwarded to the Office of Patent Application Processing for consideration of the request for change of docket number and corrected filing receipt, filed August 30, 2007 (certificate of mailing date August 27, 2007).

Subsequently, the application will be returned to Technology Center A.U. 2619 for consideration of the amendment/drawings filed on August 30, 2007 (certificate of mailing date August 27, 2007).

Telephone inquiries pertaining to this matter may be directed to the undersigned at (571) 272-3230.

Shirene Willis Brantley

Shirene Willis Brantley
Senior Petitions Attorney
Office of Petitions
Office of the Deputy Commissioner
for Patent Examination Policy

SPE W. Trost IV

SPE RESPONSE FOR CERTIFICATE OF CORRECTION

Paper No.: _____

DATE : 3/13/07

TO SPE OF : ART UNIT 2617

SUBJECT : Request for Certificate of Correction for Appl. No.: 09/975,524 Patent No.: 6965785

Please respond to this request for a certificate of correction within 7 days.

Please review the requested changes/corrections as shown in the **COCIN** document(s) in the IFW application image. No new matter should be introduced, nor should the scope or meaning of the claims be changed.

Please complete the response (see below) and forward the completed response to scanning using document code **COCX**.

Lamonte M. Newsome
Certificates of Correction Branch
703-308-9390 ext. 112

Thank You For Your Assistance

The request for issuing the above-identified correction(s) is hereby:
Note your decision on the appropriate box.

- ☐ **Approved** — All changes apply.
- ☒ **Approved in Part** — Specify below which changes **do not** apply.
- ☐ **Denied** — State the reasons for denial below.

Comments: The error sought to be corrected, i.e. "intensity or brightest" is located on line 50, not on line 5, in column 6. Otherwise, the correction requested is of a clerical nature and is approved.

CHApparel — SPE

2617 — Art Unit

SPE W. Trost IV

SPE RESPONSE FOR CERTIFICATE OF CORRECTION

Paper No.: _____

DATE : 3/13/07

TO SPE OF : ART UNIT 2617

SUBJECT : Request for Certificate of Correction for Appl. No.: 09/975,524 Patent No.: 6965785

Please respond to this request for a certificate of correction within 7 days.

Please review the requested changes/corrections as shown in the **COCIN** document(s) in the IFW application image. No new matter should be introduced, nor should the scope or meaning of the claims be changed.

Please complete the response (see below) and forward the completed response to scanning using document code **COCX**.

Lamonte M. Newsome
Certificates of Correction Branch
703-308-9390 ext. 112

Thank You For Your Assistance

The request for issuing the above-identified correction(s) is hereby:
Note your decision on the appropriate box.

- ☐ **Approved** — **All** changes apply.
- ☒ **Approved in Part** — Specify below which changes **do not** apply.
- ☐ **Denied** — State the reasons for denial below.

Comments: The request is approved in part. The reason for partial approval is that the error and/or correction sought to be made in column 6 is not located at line 5, as indicated in the request. Thus, line 5 should have been line 50.

Appiah — SPE
2617 — Art Unit

CHARLES N. APPIAH
SUPERVISORY PATENT EXAMINER

UNITED STATES PATENT AND TRADEMARK OFFICE

UNITED STATES DEPARTMENT OF COMMERCE
United States Patent and Trademark Office
Address: COMMISSIONER FOR PATENTS
P.O. Box 1450
Alexandria, Virginia 22313-1450
www.uspto.gov

APPLICATION NO.	FILING DATE	FIRST NAMED INVENTOR	ATTORNEY DOCKET NO.	CONFIRMATION NO.
09/975,552	10/12/2001	Douglas A. Kirkpatrick	306.07	7515

21249 7590 05/07/2004

FUSION LIGHTING, INC.
P.O. BOX 86223
MONTGOMERY VILLAGE, MD 20886-6223

EXAMINER
VU, JIMMY T

ART UNIT	PAPER NUMBER
2821	

DATE MAILED: 05/07/2004

Please find below and/or attached an Office communication concerning this application or proceeding.

UNITED STATES DEPARTMENT OF COMMERCE
United States Patent and Trademark Office

Address: COMMISSIONER OF PATENTS AND TRADEMARKS
Washington, D.C. 20231

APPLICATION NUMBER	FILING DATE	FIRST NAMED APPLICANT	ATTORNEY DOCKET NO.
09/975,552			

EXAMINER

ART UNIT	PAPER NUMBER

DATE MAILED:

NOTICE OF ABANDONMENT

This application is abandoned in view of:

☐ Applicant's failure to timely file a proper reply to the Office letter mailed on _____.

☐ A reply (with Certificate of Mailing or Transmission of _____) was received on _____ which is after the expiration of the period for reply (including a total extension of time of _____ month(s)) which expired on _____.

☐ A proposed reply was received on _____ , but it does not constitute a proper reply under 37 CFR 1.113 to the final rejection.
(A proper reply under 37 CFR 1.113 to a final rejection consists only of: (1) a timely filed amendment which places the application in condition for allowance; (2) a timely filed Notice of Appeal (with appeal fee); or (3) a timely filed Request for Continued Examination (RCE) in compliance with 37 CFR 1.114).

☐ A reply was received on _____ , but it does not constitute a proper reply, or a *bona fide* attempt at a proper reply, to the non-final rejection. See 37 CFR 1.85(a) and 1.111. (See explanation in the last box below).

☐ No reply has been received.

☒ Applicant's failure to timely pay the required issue fee and publication fee, if applicable, within the statutory period of three months from the mailing date of the Notice of Allowance (PTOL-85).

☐ The issue fee and publication fee, if applicable, was received on _____ (with a Certificate of Mailing or Transmission dated _____), which is after the expiration of the statutory period for payment of the issue fee (and publication fee) set in the Notice of Allowance (PTOL-85)(or Notice of Publication Fee Due).

☐ The submitted fee of $_____ is insufficient. A balance of $ _____ is due.
The issue fee by 37 CFR 1.18 is $_____ . The publication fee, if required, by 37 CFR 1.18(d) is $_____.

☒ The issue fee and publication fee, if applicable, have not been received.

☐ Applicant's failure to timely file corrrected drawings as required by, and within the three-month period set in, the Notice of Allowability (PTOL-37).

☐ Proposed corrected drawings were received on _____ (with a Certificate of Mailing or Transmission dated _____), which is after the expiration of the period for reply.

☐ No corrected drawings have been received.

☐ The letter of express abandonment which is signed by the attorney or agent of record, the assignee of the entire interest, or all the applicants.

☐ The letter of express abandonment which is signed by an attorney or agent (acting in a representative capacity under 37 CFR 1.34(a)) upon filing of a continuing application.

☐ The decision by the Board of Patent Appeals and Interferences rendered on _____ and because the period for seeking court review of the decision has expired and there are no allowed claims.

☐ The reason(s) below: _____

Petitions to revive under 37 CFR 1.137(a) or (b), or requests to withdraw the holding of abandonment under 37 CFR 1.181, should be promptly filed to minimize any negative effects on patent term.

(el)

UNITED STATES PATENT AND TRADEMARK OFFICE

Commissioner for Patents
United States Patent and Trademark Office
P. O. Box 1450
Alexandria, VA 22313-1450
www. uspto. gov

BLAKELY SOKOLOFF TAYLOR & ZAFMAN
12400 WILSHIRE BOULEVARD
SEVENTH FLOOR
LOS ANGELES, CA 90025-1030

COPY MAILED

FEB 18 2005

OFFICE OF PETITIONS

In re Application of	:	
Douglas A. Kirkpatrick et al	:	
Application No. 09/975,552	:	ON PETITION
Filed: October 12, 2001	:	
Attorney Docket No. 306.07	:	

This is a decision on the petition under 37 CFR 1.137(b), filed December 20, 2004, to revive the above-identified application.

The petition is **GRANTED**.

The above-identified application became abandoned for failure submit the Issue fee in a timely manner in reply to the Notice of Allowance mailed December 17, 2003, which set a statutory period for reply of three (3) months. Accordingly, the above-identified application became abandoned on March 18, 2004.

Telephone inquiries concerning this decision should be directed to Irvin Dingle at (571) 272-3210.

This matter is being forwarded to the Publishing Division.

Irvin Dingle
Petitions Examiner
Office of Petitions
Office of the Deputy Commissioner
for Patent Examination Policy

UNITED STATES PATENT AND TRADEMARK OFFICE

UNITED STATES DEPARTMENT OF COMMERCE
United States Patent and Trademark Office
Address: COMMISSIONER FOR PATENTS
P.O. Box 1450
Alexandria, Virginia 22313-1450
www.uspto.gov

FLIESLER MEYER LLP
650 CALIFORNIA STREET
14TH FLOOR
SAN FRANCISCO, CA 94108

Mail Date: 04/20/2010

Applicant	: Dean Bernard Jacobs	: DECISION ON REQUEST FOR
Patent Number	: 7571215	: RECALCULATION of PATENT
Issue Date	: 08/04/2009	: TERM ADJUSTMENT IN VIEW
Appliction No	: 09/975,590	: OF WYETH AND NOTICE OF INTENT TO
Filed	: 10/11/2001	: ISSUE CERTIFICATE OF CORRECTION
		:

The Request for Recalculation is **GRANTED** to the extent indicated.

The patent term adjustment has been determined to be **1307** days. The USPTO will *sua sponte* issue a certificate of correction reflecting the amount of PTA days determined by the recalculation.

Prior to the issuance of the certificate of correction, the USPTO will afford patentee an opportunity to be heard and request reconsideration. Accordingly, patentee has **one month or thirty (30) days**, whichever is longer, to file a request for reconsideration of this patent term adjustment calculation. See 35 U.S.C. 154(b)(3)(B)(ii) and 37 CFR 1.322(a)(4). No extensions of time will be granted under 37 CFR 1.136.

Patentee should use document code PET.OP if electronically filing a request for reconsideration of this patent term adjustment calculation. The patentee must also include the information required by 37 CFR 1.705(b)(2) and the fee required by 37 CFR 1.18(e). If patentee does not file a timely request for reconsideration of this patent term adjustment calculation including the information required by 37 CFR 1.705(b)(2) and the fee required by 37 CFR 1.18(e), the USPTO will issue a certificate of correction reflecting the PTA determination noted above.

Patentee should be aware that in order to preserve the right to review in the United States District Court for the District of Columbia of the USPTO patent term adjustment determination, patentee must ensure that he or she also take the steps required under 35 U.S.C. 154(b)(4)(A) in a timely manner. Nothing in the request for recalculation should be construed as providing an alternative time frame for commencing a civil action under 35 U.S.C. 154(b)(4)(A).

Any questions concerning this decision should be directed to the Office of Patent Legal Administration at 571-272-7702.

UNITED STATES PATENT AND TRADEMARK OFFICE

COMMISSIONER FOR PATENTS
UNITED STATES PATENT AND TRADEMARK OFFICE
P.O. BOX 1450
ALEXANDRIA, VA 22313-1450
www.uspto.gov

SHUMAKER & SIEFFERT, P. A.
8425 SEASONS PARKWAY
SUITE 105
ST. PAUL, MN 55125

COPY MAILED

NOV 04 2005

OFFICE OF PETITIONS

In re Application of	:	
Biessner et al.	:	
Application No. 09/975,628	:	
Filed: October 12, 2001	:	ON PETITION
Attorney Docket No.:	:	
1009-001US02	:	

This is a decision on the Petition for Withdrawal of the Holding of Abandonment, filed September 6, 2005. The petition is properly treated under 37 CFR 1.181.

The petition is **granted.**

The above-identified application became abandoned for failure to timely reply to the Notice of Allowance and Issue Fee Due, mailed May 6, 2005. The Notice set a non-extendable three (3) month period for reply. No reply having been received, the above-identified application became abandoned August 7, 2005. The mailing of this Decision precedes the mailing of a Notice of Abandonment.

Applicant's Assertion

Applicant avers non-receipt of the Notice of Allowance and Issue Fee Due. In support, Applicant has provided the necessary statements and copies of the docket record where the non-received Office action would have been entered had it been received and docketed. Applicant has demonstrated by a preponderance of the evidence that the Notice of Allowance and Issue Fee Due was not received.

The Notice of Abandonment is hereby withdrawn.

No fee has been charged and none is due.

The application file is being referred to Technology Center 2189 for remailing of the Notice of Allowance and Issue Fee Due and Notice of Allowability.

Telephone inquiries concerning this matter should be directed to the undersigned at (571) 272-3232.

Derek L. Woods
Attorney
Office of Petitions

UNITED STATES PATENT AND TRADEMARK OFFICE

COMMISSIONER FOR PATENTS
UNITED STATES PATENT AND TRADEMARK OFFICE
P.O. BOX 1450
ALEXANDRIA, VA 22313-1450
www.uspto.gov

Paper No.

Jay M. Cantor
Texas Instruments Inc.
P. O. Box 655474, MS 3999
Dallas, TX 75265

COPY MAILED
JUN 0 9 2004
OFFICE OF PETITIONS

In re Application of	:	
Taylor R. Elfand	:	
Application No. 09/975,630	:	ON PETITION
Filed: October 12, 2001	:	
Attorney Docket No. TI-31678	:	

This is a decision on the petition under 37 CFR 1.137(b), filed April 19, 2004, to revive the above-identified application.

The petition is **GRANTED**.

Telephone inquiries concerning this decision should be directed to the undersigned at (703) 306-3475.

The application file is being forwarded to Technology Center 2800 for processing the Request for Continued Examination under 37 CFR 1.114 filed with the instant petition.

Marianne E. Morgan
Petitions Examiner
Office of Petitions
Office of the Deputy Commissioner
for Patent Examination Policy

UNITED STATES PATENT AND TRADEMARK OFFICE

COMMISSIONER FOR PATENTS
UNITED STATES PATENT AND TRADEMARK OFFICE
P.O. BOX 1450
ALEXANDRIA, VA 22313-1450
www.uspto.gov

JAN 28 2004

Paper No. 11

In re Application of
Mark S. Crowder *et al*
Application No. 09/975,642
Filed: October 10, 2001
Attorney Docket No. 3123-380

DECISION ON PETITION

This is a decision on the petition filed on October 17, 2003 by which petitioner requests review of and withdrawal of the examiner's restriction requirements, of which there have been two to date. The petition is considered pursuant to 37 CFR 1.144 and 1.181, and no fee is required.

The petition is granted.

Prosecution History To Date

A review of the record shows that this application was originally assigned to Technology Center 2600. The first action on this application, paper No. 5 dated May 13, 2003, was a requirement by the examiner in Technology Center 2600 to restrict the claims in this application to one of two allegedly distinct inventions. These inventions were described as being:

Group I, claims 1-31 and 43-50 drawn to a method for reducing corrosion of a head element during rework operations and methods for shipping and storing; and

Group II, claims 32-42 and 51-63, drawn to an improvement and a subcombination.

The record shows that on March 19, 2003, an examiner in Technology Center 3700 indicated approval of the claims in Group I for examination in Technology Center 3700 by initialing those claims as being acceptable for Class 29, subclass 603.03.

On June 12, 2003, petitioners elected the invention of Group I for prosecution in this application. The election was with traverse. Petitioners argued that the basis for the restriction between the claims of Group I and the claims of Group II was erroneous, inasmuch as the apparatus (*sic*, claims 32-42 and 51-63 are drawn to a product resulting from the Group I process) claimed in the Group II claims could not in fact be made by a process differing from the process as recited in the Group I claims because the broad Group I claims did not recite a testing step. It was the presence of this testing step in the Group I claims that was relied upon by the Technology Center 2600 examiner as distinguishing between the disk drive and head element recited in the Group II claims. Petitioners also pointed out that as all claims except four dependent process claims did not recite a "testing" step, and as the process claims and apparatus claims relied on the same limitations found, there was no serious burden on the examiner necessitating restriction. Coupled with the elections, the claims were amended concurrently with the election in a way that is immaterial to the issues at hand

As a result of the election of the Group I invention, the application was transferred to Technology Center 3700. On June 26, 2003, the examiner in Technology Center 3700 promulgated paper No. 7, which is a second restriction requirement. The examiner adhered to the restriction requirement as originally promulgated. The examiner opined that "even though there is no testing process in the claimed invention, the product as claimed can be made by another and materially different process." That process was described as "applying a protecting coating to the head element prior to remove (*sic*, removal of) the head element from the housing of the disk drive. The significance of these statements will be discussed, *infra*.

In addition to adhering to the original restriction requirement for somewhat different reasons than advanced by the Technology Center 2600 examiner, and making that restriction requirement final (37

CFR 1.143; MPEP § 821.01), the Technology Center 3700 examiner additionally required restriction between the inventions defined by claims 1-31, drawn to a method for reducing corrosion of a head element during rework operations and claims 43-50, drawn to a method of shipping a head element removed from a disk drive. The examiner based this additional restriction on the practice set forth at MPEP § 806.06(c) which governs restrictions between claims directed to a combination and claims directed to a subcombination of that combination. The examiner opined that claims 1-31 defined a combination, while claims 43-50 defined a subcombination of that combination. Claims 43-50 were indicated by an examiner in Class 53 as being proper in Class 53, and not Class 29. The examiner also then required an election of species in the event in the event that "subcombination" claims 1-31 were elected, holding that this group of claims contained claims that were directed to seven distinct species. The examiner identified these species by listing the claims that the examiner felt defined the species.

Petitioners filed a reply to the second restriction requirement in paper No. 8, filed July 28, 2003. In the reply, petitioner traversed the newly reworked restriction requirement and of the requirement to elect species. The reply also included an election of certain claims, but the election was clearly not consonant with the requirement to restrict. Further, petitioners did not elect a species, notwithstanding that their election encompassed claims subject to the further requirement to elect species, because petitioners claimed that they could make no such election.

The examiner responded to paper No. 9, dated September 17, 2003, by holding that the reply in paper No. 8 was not fully responsive The examiner held the reply to be a *bona fide* attempt to respond, and set a new shortened statutory period of one month or thirty days, subject to extensions of time under 37 CFR 1.136(a), in which to reply. See paper No. 10.

Petitioners reply to paper No. 10 has not yet been filed. Instead, petitioners filed the instant petition. Given the circumstances of the prosecution to date, in particular for reasons to be discussed *infra*, the reply embodied in paper No. 8 is deemed to be as complete as could have been filed.

The Disclosed Inventions

A review of the Summary of the Invention portion of the specification, at pages 3-7, shows that the instant invention i, in one aspect, directed to the situation in which a hard disk drive that was assembled needs to be serviced, that is reworked. In order to service or rework the drive, the drive's case must be opened. When the case is opened, the head element is exposed to the atmosphere and associated corrosives. The invention involves the recognition of this fact and the concept that a protective coating can be applied to the removed head element after the disk drive has been disassembled. The same concept, applying a protective coating, is disclosed to be applicable to head stack assemblies that need reworking either before installation or after removal from a previous installation. The disclosure further contemplates a preferred coating material, and a preferred manner of applying the coating by using one of several different film deposition processes, but other processes of applying the coating such as a vapor-mediated process. Cleaning of the component may optionally be performed prior to the coating, the coating may be post processed as by application of infrared or other engeries, and the coating could be applied in various thicknesses. A reassembled device may be tested. The above process is also disclosed as being useable when the drive or HSA is being shipped, or stored, rather than being replaced reassembled in the case of a component that was removed for reworking, or assembled in the case of a component that was not previously installed.

Various specific details of the invention can be gleaned from a reading of the Detailed Description at pages 8-13 in conjunction with the Brief Descriptio of the Drawings which can be found at pages 7 and 8.

The Claimed Invention

Claims 1-31 recite a method of reducing corrosion in a head element during a rework operation, wherein the head element had been initially contained with the housing of an assembled disk drive. The sole independent claim is claim 1, which reads:

1. A method for reducing corrosion of a head element during rework operations, said head element being initially contained within the housing of an assembled disk drive, said method comprising the steps of:

opening said housing of said disk drive;

removing said head element from said housing of said disk drive; and

applying a protective coating to said head element.

Claims 2-31 recite various details in accordance with the disclosure of the various options as discussed, *infra*, and as specifically described in the complete specification.

Claims 32-42 recite a disk drive that has been opened for reworking after it was once assembled, from which the head element was removed, with the head element having a coating that was applied to the head element after the head element was removed, which coating protects against corrosive effects of the atmosphere. The sole independent claim in this group of claims reads:

32. In a disk drive having at least one head element, said disk drive having been opened after assembly for purpose of reworking, and the head element having been removed, the improvement comprising:

a protective coating applied to said head element after removal of the head element to reduce corrosive effects from the surrounding atmosphere.

Claims 43-46 recited a method of shipping a head element that has been removed from a disk drive. The sole independent claim reads:

43. A method for shipping a head element removed from a disk drive, said method comprising the steps of:

removing said element from said disk drive;

applying a protective coating to said head element;

placing said head element into a container; and,

transporting said container.

Claims 47-50 recited a method of storing a head element that was removed from a disk drive. The sole independent claim reads:

47. A method for storing a head element removed from a disk drive, said method comprising the steps of:

removing said element from said disk drive;

applying a protective coating to said head element; and

placing said head element into a storage container.

Claims 51-63 are directed to the head element *per se*, as after the head element was has been removed from a disassembled and partially reworked disk drive. The sole independent claim reads:

51. In subcombination, from a disk drive that is disassembled and at least partially reworked, the subcombination comprising:

a head element for transferring data to and from said disk;

a protective coating on said head element applied after disassembly wherein disassembly includes removal of the head element from the disk drive.

Restriction Practice

Restriction practice is discussed in Chapter 800 of the Manual of Patent Examining Procedure. It is impossible in this decision to describe all of the nuances associated with this practice. Suffice it to say, however, that there are certain cardinal principles that govern the practice, and certain specific tests that must be satisfied when restriction between distinct inventions, or when an election between species, is properly promulgated. It is worth discussing some of the relevant principles and specific tests discussed in Chapter 800.

The authority to require restriction is conferred by 35 USC § 121. This section of the law reads, in pertinent part:

35 U.S.C. 121, Divisional applications.

"**If** two or more **independent and distinct inventions** are claimed in one application the Director **may** require the application to be restricted to one of the inventions." (Emphasis added.)

As discussed in MPEP § 802.01 the term "independent inventions" means that there is no disclosed relationship between the two or more subjects disclosed. An example is species under a genus which species are not usable together as disclosed. The term "distinct inventions" means "that two or more subjects are related, as for example, combination and part (subcombination) thereof, ... process and product made, etc., but are capable of separate manufacture, use or sale as claimed, AND ARE PATENTABLE (novel and unobvious) OVER EACH OTHER (though they may each be unpatentable because of the prior art). (Emphasis in the original.)

With respect to species, MPEP § 801.01(a) states that when requiring an election of species, "[T]here must be a patentable difference between the species as claimed." See also MPEP § 806.04(h), which is **entitled** "Species Must Be Patentably Distinct From Each Other." In addition, MPEP § 806.04(e) states that "Claims are definitions of inventions. *Claims are never species.* Claims may be restricted to a single disclosed embodiment (i.e., a single species, and thus be designated a *specific species claim*), or a claim may include two or more of the disclosed embodiments within the breadth and scope of definition (an thus be designated a *generic or species claim*). *Species are always the specifically different embodiments.*" (Emphasis in the original.)

Analysis of the Record in This Application

Applying the principles that govern restriction between distinct inventions and between independent inventions (species) to the specifically disclosed inventions and the claims directed thereto in this application, it is clear that the restriction and election requirements set for in paper No. 7 cannot be sustained. The reasons for this are:

1. As set forth, the requirement to restrict between claims 1-31 directed to a method of reducing corrosion in a head element during a rework operation, claims 43-46 directed a method of shipping a head element that has been removed from a disk drive and 47-50 directed to a method of shipping a head element that has been removed from a disk drive is predicated on combination, subcombination practice.

2. In making the combination, subcombination restriction, the examiner held that claims 43-50 were subcombination claims and claims 1-31 were combination claims. This is clearly erroneous since claims 1-31 are, as claimed, directed to an invention which is a subcombination of (that is, a part of) the combination invention to which claims 43-50 are directed. Claims 43-50 require the steps of removing an element from a disk drive, coating the element, and then placing the coated element in a container (and shipping the contained element or (inferentially) storing the contained element. Claims 1-31 are directed to opening a disk drive, removing the element and coating the element. It is also noted that claims 43-50 require that the step of opening the disk drive has taken place. Clearly, the invention to which claims 43-50 are directed include the invention to which claims 1-31 are directed, and therefore, claims 1-31 and the invention to which they are directed are a part of (that is, a subcombination of), the invention to which claims 43-50 are directed.

3. The election of species is clearly erroneous as set forth since it identifies species as being claims. The proper way to identify a species to which one or claims are directed (that is, one only offers a choice of a electing a species when there are one or more claims that are limited only to that species, MPEP § 806.04(f), is to identify the species with words, or by drawing figures if applicable. Here, for example, the species to which claim 3 is apparently directed should have been identified as "a method for reducing corrosion in which a protective coating is applied in a vacuum chamber." Note also that so-called species F is not really a separate species as disclosed, since the post-processing step is disclosed as being applicable to any of the disclosed ways of applying the coating.

4. It is also noted that the making of the restriction requirement final in paper No. 7 was in fact improper because the examiner used a totally different rationale in paper No. 7 than was employed in paper No. 5. Apparently recognizing that the broad claims directed to the method of claims 1-31 were not restrictable from the broad claims directed to the disk drive of claims 32-42 and 51-63 because no testing step was required by the broad claims, the examiner switched rationales and held that the protective coating could be applied to the head element prior to removal of the head element from the housing of the disk drive. Given that claim 32 requires that the head element had been removed from the disk drive to be reworked and the applied coating was for the purpose of protecting the element from the corrosive effects of the atmosphere, it would appear that this new rationale is questionable at best. However, as it is certainly a new rationale, paper No. 7 should not have made the restriction requirement final.

Decision

For the foregoing reasons, the relief requested by petitioner will be granted. Specifically the restriction requirement and the election of species requirement are both reversed for reasons 1-3 set forth in the paragraph above, as well as for the reason that the requirement in paper No. 7 should not have been made final. The application is being forwarded to the Supervisory Patent Examiner (SPE) in Art Unit 3729. The SPE should review this application together with the examiner. If a decision is reached that a restriction requirement is proper, a new restriction requirement in strict compliance with the guidance in Chapter 800 of the Manual of Patent Examining Procedure, as discussed above and as it otherwise appears, should be promulgated. That requirement must reflect careful consideration of whether the inventions found to be distinct are in fact, *prima facie*, patentably distinct one from the other.

PETITION GRANTED.

E. Rollins-Cross, Director
Technology Center 3700

SHERIDAN ROSS PC
1560 Broadway
Suite 1200
Denver, CO 80202

UNITED STATES PATENT AND TRADEMARK OFFICE

Commissioner for Patents
United States Patent and Trademark Office
P.O. Box 1450
Alexandria, VA 22313-1450
www.uspto.gov

SYMYX TECHNOLOGIES INC
LEGAL DEPARTMENT
415 OAKMEAD PARKWAY
SUNNYVALE CA 94085

COPY MAILED

JAN 0 8 2007

OFFICE OF PETITIONS

In re Application of	
Giaquinta et al.	:
Application No. 09/975,707	:
Patent: 6,758,951	: NOTICE
Filed: October 11, 2001	:
Issued: July 6, 2004	:
Attorney Docket Number: 1012-105(2000-111)	:

This is a notice regarding your request filed on August 24, 2006.

The change in status to a large entity has been entered and made of record. This Notice is not intended to imply that the USPTO conducted any investigation of this matter.

Telephone inquiries specific to this decision may be directed to the undersigned at (571) 272-3215.

Charlema R. Grant

Charlema R. Grant
Petitions Attorney
Office of Petitions

UNITED STATES PATENT AND TRADEMARK OFFICE

Commissioner for Patents
United States Patent and Trademark Office
P.O. Box 1450
Alexandria, VA 22313-1450
www.uspto.gov

DAVIS WRIGHT TREMAINE, LLP
2600 CENTURY SQUARE
1501 FOURTH AVENUE
SEATTLE WA 98101-1688

COPY MAILED

DEC 2 1 2006

OFFICE OF PETITIONS

In re Application of	:	
Miller et al.	:	
Application No. 09/975,736	:	ON PETITION
Filed: October 10, 2001	:	
Attorney Docket No. 35053.008	:	

This is a decision on the petition under 37 C.F.R. § 1.137(b), filed May 15, 2006, to revive the above-identified application.

The petition is **GRANTED.**

The petition satisfies the conditions for revival pursuant to the provisions of 37 CFR 1.137(b) in that (1) the reply in the form of an Amendment; (2) the petition fee; and (3) the required statement of unintentional delay have been received. Accordingly, the response has been accepted as having been unintentionally delayed.

The Revocation and Substitute Power of Attorney submitted with the instant petition on May 15, 2006, is hereby not accepted. The power of attorney must be filed by all of the applicants (§§ 1.42. 1.43 and 1.47) for patent. The power of attorney submitted with the instant petition was only signed by one of the two listed applicants. While a courtesy copy of this decision is being mailed to the person signing the instant petition, all future correspondence will be directed solely to the address currently of record until such time as appropriate instructions are received to the contrary.

This matter is being referred to Technology Center 2100 for further examination on the merits.

Telephone inquiries regarding this decision should be directed to the undersigned at (571) 272-3206.

Liana Walsh
Petitions Examiner
Office of Petitions

Cc:

ROBERT W. BERGSTROM
OLYMPIC PATENT WORKS PLLC
P.O. BOX 4277
SEATTLE, WA 98194-0277

UNITED STATES PATENT AND TRADEMARK OFFICE

COMMISSIONER FOR PATENTS
UNITED STATES PATENT AND TRADEMARK OFFICE
P.O. BOX 1450
ALEXANDRIA, VA 22313-1450
www.uspto.gov

COPY MAILED

SEP 25 2006

OFFICE OF PETITIONS

DAVIS WRIGHT TREMAINE, LLP
2600 CENTURY SQUARE
1501 FOURTH AVENUE
SEATTLE, WA 98101-1688

In re Application of
Phillips, et al.
Application No. 09/975,748
Filed: October 10, 2001
Docket No.: 480180.403

: DECISION ON PETITION

This is a decision on the petition under 37 C.F.R. § 1.137(b), filed May 9, 2006, to revive the above-identified application.

The petition is **GRANTED**.

This application became abandoned November 29, 2002 for failure to timely reply to the non-final Office action mailed August 28, 2002. The non-final Office action set a three (3) month shortened statutory period of time for reply. No extensions of time in accordance with 37 C.F.R. § 1.136 were timely requested. Notice of Abandonment was mailed March 10, 2003.

A grantable petition pursuant to 37 C.F.R. § 1.137(b) must be accompanied by: (1) the required reply to the outstanding Office action or notice, unless previously filed; (2) the petition fee as set forth in 37 C.F.R. § 1.17(m); (3) a statement that the entire delay in filing the required reply from the due date for the reply until the filing of a grantable petition pursuant to 37 C.F.R. § 1.137(b) was unintentional; and (4) any terminal disclaimer (and fee set forth in 37 C.F.R. § 1.20(d)) required pursuant to 37 C.F.R. § 1.137(c).

The instant petition has been reviewed and found in compliance with the provisions of 37 C.F.R. § 1.137(b). Accordingly, the failure to timely submit a proper reply to the non-final Office action is accepted as having been unintentionally delayed.

The above-identified application has been abandoned for an extended period of time. The Patent and Trademark Office is relying on petitioner's duty of candor and good faith in accepting the statement that the entire delay in filing the required reply from the due date for the reply until the filing of a grantable petition pursuant to 37 CFR 1.137(b) was unintentional. See, Changes to Patent Practice and Procedure, 62 Fed. Reg. at 53160 and 53178; 1203 Off. Gaz. Pat. Office at 88 and 103 (responses to comments 64 and 109)(applicant obligated

under 37 CFR 10.18 to inquire into the underlying facts and circumstances when providing the statement required by 37 CFR 1.137(b) to the Patent and Trademark Office).

It is not apparent whether the person signing the statement of unintentional delay was in a position to have firsthand or direct knowledge of the facts and circumstances of the delay at issue. Nevertheless, such statement is being treated as having been made as the result of a reasonable inquiry into the facts and circumstances of such delay. See 37 CFR 10.18(b) and Changes to Patent Practice and Procedure; Final Rule Notice, 62 Fed. Reg. 53131, 53178 (October 10, 1997), 1203 Off. Gaz. Pat. Office 63, 103 (October 21, 1997). In the event that such an inquiry has not been made, petitioner must make such an inquiry. If such inquiry results in the discovery that it is not correct that the entire delay in filing the required reply from the due date for the reply until the filing of a grantable petition pursuant to 37 CFR 1.137(b) was unintentional, petitioner must notify the Office.

There is no indication that practitioner herein has been empowered to represent the instant application. Moreover, the correspondence address indicated in the instant petition differs from that currently of record. If practitioner desire to receive future correspondence regarding this application, the appropriate documentation must be submitted to the Office. **Please be advised that all future correspondence will be directed to the address currently of record until such time as appropriate instructions are received to the contrary.**

This application is being forwarded to Technology Center 2800 for further processing.

Telephone inquiries concerning this matter may be directed to the undersigned at (571) 272-3205.

Alesia M. Brown
Petitions Attorney
Office of Petitions

CC: OLYMPIC PATENT WORKS PLLC
P.O. BOX 4277
SEATTLE, WA 98194-0277

UNITED STATES PATENT AND TRADEMARK OFFICE

Commissioner for Patents
United States Patent and Trademark Office
P.O. Box 1450
Alexandria, VA 22313-1450
www.uspto.gov

COPY MAILED

AUG 3 1 2006

OFFICE OF PETITIONS

DAVIS WRIGHT TREMAINE, LLP
2600 CENTURY SQUARE
1501 FOURTH AVENUE
SEATTLE, WA 98101-1688

In re Application of	:	
Eric Paul Gibbs et al	:	
Application No. 09/975,749	:	ON PETITION
Filed: October 10, 2001	:	
Attorney Docket No. 480180.401	:	

This is a decision on the petition under 37 CFR 1.137(b), filed May 9, 2006, to revive the above-identified application.

The petition is **GRANTED**.

The above-identified application became abandoned for failure to reply in a timely manner to the non-final Office action mailed April 26, 2005, which set a shortened statutory period for reply of three (3) months. No extension of time under the provisions of 37 CFR 1.136(a) were obtained. Accordingly, the above-identified application became abandoned on July 27, 2005.

The Revocation and Substitute Power of Attorney submitted with the petition on May 9, 2006 is not accepted. Communications received at the USPTO must be signed by all of the applicants. 37 CFR 1.33(b) states:

> "Amendments and other papers filed in the application must be signed by: (1) An attorney or agent of record appointed in compliance with § 1.34(b); (2) A registered attorney or agent not of record who acts in a representative capacity under the provisions of § 1.34(a); (3) The assignee of record of the entire interest, if there is an assignee of record of the entire interest; (4) An assignee of record of an undivided part interest, and any assignee(s) of the remaining interest and any applicant retaining an interest, if there is an assignee of record of an undivided part interest; or (5) All of the applicants (§§ 1.42. 1.43 and 1.47) for patent, unless there is an assignee of record of the entire interest and such assignee has taken action in the application in accordance with §§ 3.71 and 3.73."

A courtesy copy of this decision is being mailed to Robert W. Bergstrom; however, the Office will mail all future correspondence solely to the address of record.

Telephone inquiries concerning this decision should be directed to Irvin Dingle at (571) 272-3210.

This matter is being referred to Technology Center AU 2644 for further processing.

Irvin Dingle
Petitions Examiner
Office of Petitions

cc: Robert W. Bergstrom
Olympic Patent Works PLLC
P.O. Box 4277
Seattle, WA 98194-0277

UNITED STATES PATENT AND TRADEMARK OFFICE

COMMISSIONER FOR PATENTS
UNITED STATES PATENT AND TRADEMARK OFFICE
WASHINGTON, D.C. 20231
www.uspto.gov

Paper No. 8

WILLIAM H. DIPPERT
REED SMITH LLP
375 PARK AVENUE
NEW YORK, NY 10152

COPY MAILED

APR 25 2003

OFFICE OF PETITIONS

In re Application of :
Benjamin Spencer, et al. :
Application No. 09/975,750 :
Filed: October 11, 2001 :
Attorney Docket No. 501015.20501 (24230.53) :

ON PETITION

This is a decision on the petition under 37 CFR 1.137(b), filed July 9, 2002 and supplemented on April 24, 2003, to revive the above-identified application.

The petition is **GRANTED**.

The above-identified application became abandoned for failure to reply in a timely manner to the Notice to File Missing Parts of Nonprovisional Application mailed November 15, 2001. The Notice set a period for reply of two (2) months from the mail date of the Notice. No extensions of time under the provisions of 37 CFR 1.136(a) were obtained. Accordingly, the above-identified application became abandoned on January 16, 2002.

The verified statement claiming small entity status of April 24, 2003, has been made of record and small entity status has been accorded.

The Change of Correspondence Address has been accepted and recorded.

Telephone inquiries concerning this decision should be directed to the undersigned at (703) 306-5594.

The application file is being forwarded to the Office of Initial Patent Examination for further processing.

Retta Williams

Retta Williams
Petitions Examiner
Office of Petitions
Office of the Deputy Commissioner
for Patent Examination Policy

UNITED STATES PATENT AND TRADEMARK OFFICE

COMMISSIONER FOR PATENTS
UNITED STATES PATENT AND TRADEMARK OFFICE
P.O. BOX 1450
ALEXANDRIA, VA 22313-1450
www.uspto.gov

MINTZ, LEVIN, COHN, FERRIS, GLOVSKY
AND POPEO, P.C.
ONE FINANCIAL CENTER
BOSTON, MA 02111

COPY MAILED
JUN 0 8 2006
OFFICE OF PETITIONS

In re Application of
Jiang et al. :
Application No. 09/975,776 :
Filed: October 10, 2001 : NOTICE
Patent No. 6,962,944 :
Issued: November 8, 2005 :
Atty Docket Number: 22596-514 (CO-14) :

This is a notice regarding your request to change your entity status to large.

In accordance with 37 CFR 1.28, said notice is hereby accepted. Office records have been corrected to indicate loss of small entity status in the above-identified application.

Telephone inquiries concerning this matter should be directed to the undersigned at (571) 272-3232.

Derek L. Woods
Attorney
Office of Petitions

UNITED STATES PATENT AND TRADEMARK OFFICE

COMMISSIONER FOR PATENTS
UNITED STATES PATENT AND TRADEMARK OFFICE
P.O. BOX 1450
ALEXANDRIA, VA 22313-1450
www.uspto.gov

JJGJR.: 12-04

Paper No: __

REED SMITH, LLP
ATTN: PATENT RECORDS DEPARTMENT
599 LEXINGTON AVENUE, 29TH FLOOR
NEW YORK NY 10022-7650

COPY MAILED

DEC 09 2004

OFFICE OF PETITIONS

In re Application of
Krizan :
Application No. 09/975,806 :
Filing Date: 11 October, 2001
Attorney Docket No. ITOCHU P-1/500921.20001 :

This is a decision on the petition filed on 22 September, 2004, alleging, *inter alia*, unintentional delay under 37 C.F.R. §1.137(b).

For the reasons set forth below, the petition as considered under 37 C.F.R. §1.137(b) is **GRANTED**.

BACKGROUND

The record reflects that:

- Petitioner failed to reply timely and properly to the Notice of Non-Compliance with 37 C.F.R. §1.192(c) mailed on 29 April, 2004, with response due on or before Monday 31 May, 2004;

- the application went abandoned after midnight 29 May, 2004;

- it does not appear that the Office mailed the Notice of Abandonment before the instant petition was filed;
- Petitioner filed with the instant petition (and fee) an amended brief (styled: Brief on Appeal) and made the statement of unintentional delay.

STATUTES, REGULATIONS AND ANALYSIS

Congress has authorized the Commissioner to "revive an application if the delay is shown to the satisfaction of the Commissioner to have been "unavoidable." 35 U.S.C. §133 (1994).[1]

The regulations at 37 C.F.R. §1.137(a) and (b) set forth the requirements for a petitioner to revive a previously unavoidably or unintentionally, respectively, abandoned application under this congressional grant of authority. The language of 35 U.S.C. §133 and 37 C.F.R. §1.137(a) is clear, unambiguous, and without qualification: the delay in tendering the reply to the outstanding Office action, as well as filing the first petition seeking revival, must have been unavoidable for the reply now to be accepted on petition.[2]

Delays in responding properly raise the question whether delays are unavoidable.[3] Where there is a question whether the delay was unavoidable, Petitioners must meet the burden of establishing that the delay was unavoidable within the meaning of 35 U.S.C. §133 and 37 C.F.R. §1.137(a).[4] And the Petitioner must be diligent in attending to the matter.[5] Failure to do so does not constitute the care required under Pratt, and so cannot satisfy the test for diligence and due care.

(By contrast, unintentional delays are those that do not satisfy the very strict statutory and

---

[1] 35 U.S.C. §133 provides:
35 U.S.C. §133 Time for prosecuting application.
Upon failure of the applicant to prosecute the application within six months after any action therein, of which notice has been given or mailed to the applicant, or within such shorter time, not less than thirty days, as fixed by the Commissioner in such action, the application shall be regarded as abandoned by the parties thereto, unless it be shown to the satisfaction of the Commissioner that such delay was unavoidable.

[2] Therefore, by example, an unavoidable delay in the payment of the Filing Fee might occur if a reply is shipped by the US Postal Service, but due to catastrophic accident, the delivery is not made.

[3] See: *Changes to Patent Practice and Procedure; Final Rule Notice*, 62 *Fed. Reg.* at 53158-59 (October 10, 1997), 1203 *Off. Gaz. Pat. Office* at 86-87 (October 21, 1997).

[4] See: In re Application of G, 11 USPQ2d 1378, 1380 (Comm'r Pats. 1989).

[5] See: Diligence in Filing Petitions to Revive and Petitions to Withdraw the Holding of Abandonment, 1124 Off. Gaz. Pat. Office 33 (March 19, 1991). It was and is Petitioner's burden to exercise diligence in seeking either to have the holding of abandonment withdrawn or the application revived. See 1124 Off. Gaz. Pat. Office supra.

regulatory requirements of unavoidable delay, and also, by definition, are not intentional.[6]))

The requirements for a grantable petition under 37 C.F.R. §1.137(a) are the petition and fee, a showing of unavoidable delay, a proper reply, and–where appropriate--a terminal disclaimer and fee.

Petitioner has satisfied the petition, fee, reply and statement/showing requirements of the regulation.

CONCLUSION

The instant petition under 37 C.F.R. §1.137(b) hereby is **granted**.

The instant application is released to the Technology Center 1700 for the Examiner's Answer.

Telephone inquiries concerning this decision may be directed to the undersigned at (571) 272-3214.

John J. Gillon, Jr.
Senior Attorney
Office of Petitions

[6] Therefore, by example, an unintentional delay in the reply might occur if the reply and transmittal form are to be prepared for shipment by the US Postal Service, but other pressing matters distract one's attention and the mail is not timely deposited for shipment.

UNITED STATES PATENT AND TRADEMARK OFFICE

COMMISSIONER FOR PATENTS
UNITED STATES PATENT AND TRADEMARK OFFICE
WASHINGTON, D.C. 20231
www.uspto.gov

Paper No. 7

Lee, Mann, Smith, McWilliams, Sweeney and Ohlson
P.O. Box 2786
Chicago, IL 60690-2786

COPY MAILED

MAY 1 7 2002

OFFICE OF PETITIONS

In re Application of
Savory, Guo, Hawryluck & Larose
Application No. 09/975,830
Filed: October 12, 2001
Attorney Docket No. 537-1053.1
For: GENERATION OF VARIABLE DIFFERENTIAL GROUP DELAY

: DECISION ACCORDING STATUS
: UNDER 37 CFR 1.47(a)

This is in response to the petition under 37 CFR 1.47(a), filed February 28, 2002 (certificate of mailing date February 14, 2002).

The petition is granted.

Petitioners have shown that the non-signing inventor, Qing Guo has refused to join in the filing of the above-identified application after having been presented with the application papers. Specifically, the exhibits to the petition establish that the inventor was mailed the application papers, including the specification, claims and drawings, but failed to respond to the request that he sign the declaration. For future reference, a person with first hand knowledge should set forth the events that show refusal or unavailability by means of a declaration or statement of facts. Fortunately, in this instance the exhibits to the petition are sufficiently compelling to justify granting Rule 47 status to the above-identified application.

This application and papers have been reviewed and found in compliance with 37 CFR 1.47(a). This application is hereby accorded Rule 1.47(a) status.

As provided in Rule 1.47(c), this Office will forward notice of this application's filing to the non-signing inventor at the address given in the petition. Notice of the filing of this application will also be published in the Official Gazette.

After this decision is mailed, the above-identified application will be forwarded to the Office of Initial Patent Examination for further processing.

Telephone inquiries should be directed to the undersigned at (703) 308-6712.

E. Shirene Willis

E. Shirene Willis
Petitions Attorney
Office of Petitions
Office of the Deputy Commissioner
for Patent Examination Policy

UNITED STATES PATENT AND TRADEMARK OFFICE

COMMISSIONER FOR PATENTS
UNITED STATES PATENT AND TRADEMARK OFFICE
WASHINGTON, D.C. 20231
www.uspto.gov

QING GUO
610,1339 MEADOWLANDS DR.
NEPEAN, ONTARIO
CANADA K2E 7B4

COPY MAILED

MAY 1 7 2002

OFFICE OF PETITIONS

In re Application of
Savory, Guo, Hawryluck & Larose
Application No. 09/975,830
Filed: October 12, 2001
Attorney Docket No. 537-1053.1
For: GENERATION OF VARIABLE
DIFFERENTIAL GROUP DELAY

LETTER

Dear Mr. Guo:

You are named as a joint inventor in the above identified United States patent application, filed under the provisions of 35 U.S.C. 116 (United States Code), and 37 CFR 1.47(a), Rules of Practice in Patent Cases. Should a patent be granted on the application you will be designated therein as a joint inventor.

As a named inventor you are entitled to inspect any paper in the file wrapper of the application, order copies of all or any part thereof (at a prepaid cost per 37 CFR 1.19) or make your position of record in the application. Alternatively, you may arrange to do any of the preceding through a registered patent attorney or agent presenting written authorization from you. If you care to join the application, counsel of record (see below) would presumably assist you. Joining in the application would entail the filing of an appropriate oath or declaration by you pursuant to 37 CFR 1.63.

Requests for information regarding your application should be directed to the File Information Unit at (703)308-2733. Information regarding how to pay for and order a copy of the application, or a specific paper in the application, should be directed to Certification Division at (703)308-9726 or 1(800)972-6382 (outside the Washington D.C. area).

Telephone inquiries regarding this communication should be directed to the undersigned at (703) 308-6712.

E. Shirene Willis

E. Shirene Willis
Petitions Attorney
Office of Petitions
Office of the Deputy Commissioner
for Patent Examination Policy

ATTORNEY OF RECORD: Lee, Mann, Smith, McWilliams, Sweeney and Ohlson
P.O. Box 2786
Chicago

UNITED STATES PATENT AND TRADEMARK OFFICE

Commissioner for Patents
United States Patent and Trademark Office
P.O. Box 1450
Alexandria, VA 22313-1450
www.uspto.gov

PERKINS COIE LLP
PATENT-SEA
P.O. BOX 1247
SEATTLE WA 98111-1247

MAILED

JUN 15 2010

OFFICE OF PETITIONS

In re Application of
Kamal Acharya et al.
Application No. 09/975,831
Filed: October 11, 2001
Attorney Docket No: 320529527US

ON PETITION

This is a decision on the petition filed April 27, 2010 under 37 CFR 1.183 seeking waiver of 37 CFR §§ 1.131 where it requires that an affidavit be executed by the named inventors.

The petition under 37 CFR 1.183 is **GRANTED**.

The above-identified application was filed on October 11, 2001 with an Oath fully executed by all of the co-inventors. In response to a Final Office Action mailed October 27, 2009, which set a shortened statutory period for reply of three months, applicant submitted a reply, a declaration under 37 CFR 1.131 and a three month extension of time. The 37 CFR 1.131 declaration stated that all of the inventors were responsible for reduction to practice of the subject matter of the rejected claims prior to the date of the reference on which the October 27, 2009 rejection was based. However, the 37 CFR 1.131 declaration was signed by all joint inventors except joint inventors Peter Gremett, Vincent Tong, Ellen F. Butler and Matthew Crampton. Applicant has filed the instant petition to have the 37 CFR 1.131 declaration entered despite the fact that the declaration was not signed by joint inventors Gremett, Tong, Butler and Crampton. According to applicant, joint inventors Gremett, Tong, Butler and Crampton are unavailable or could not be located.

37 CFR 1.131 states, in pertinent part:

> When any claim of an application or a patent under reexamination is rejected, the **inventor** of the subject matter of the rejected claim, the owner of the patent under reexamination, or the party qualified under §§ 1.42, 1.43, or 1.47, may submit an appropriate oath or declaration to establish invention of the subject matter of the rejected claim prior to the effective date of the reference or activity on which the rejection is based.[1]

In addition, the Manual of Patent Examining Procedure states that "an application or

[1] 37 CFR 1.131(a) (emphasis added).

declaration by less than all named inventors of an application is accepted where it is shown that less than all named inventors of an application invented the subject matter of the claim or claims under rejection."[2]

Here, there has not been a party qualified under 37 CFR 1.42, 1.43, or 1.47. In addition, the instant application is not the subject of a patent under reexamination. Moreover, it has not been shown that less than all of the named inventors of the application invented the subject matter of the claims under rejection. Accordingly, the only party eligible to sign the 37 CFR 1.131 declaration are all of the joint inventors including joint inventors Gremett, Tong, Butler and Crampton.

The petition bears proof that efforts to locate joint inventors Gremett, Tong, Butler and Crampton, such as internet searches, were used to locate them, but to no avail.

In order for a petition under 37 CFR 1.183 to be granted, petitioner must demonstrate that this is an extraordinary situation where justice requires waiver of the rules.

The 37 CFR 1.131 declaration was required to be signed by all joint inventors but all except joint inventors Gremett, Tong, Butler and Crampton have executed it. Applicant has demonstrated that a *bona fide* effort was made to locate joint inventors Gremett, Tong, Butler and Crampton. Accordingly, it is concluded that petitioner has demonstrated that this is an extraordinary situation requiring waiver of the rules.

The 37 CFR 1.131 declaration will be entered, despite the fact that its requirement that all of the inventors sign the declaration has not been satisfied.

Petitioner is advised that the fee for a petition under 37 CFR 1.183 is set at $400 not $200 thus, petitioner's deposit account no. 50-0664 has been charged in the amount of $200 per the authorization included with the petition, to supplement the $200 submitted via electronic transfer.

The application file is being forwarded to Technology Center 3625 for consideration of the reply and the 37 CFR 1.131 declaration, filed April 27, 2010.

Telephone inquiries related to this decision should be directed to the undersigned Petitions Attorney at (571) 272-3212.

Patricia Faison-Ball

Patricia Faison-Ball
Senior Petitions Attorney
Office of Petitions

---

[2] MPEP 715.04.

UNITED STATES PATENT AND TRADEMARK OFFICE

Commissioner for Patents
United States Patent and Trademark Office
P.O. Box 1450
Alexandria, VA 22313-1450
www.uspto.gov

Fish & Richardson P.C.
225 Franklin Street
Boston, MA 02110-2804

COPY MAILED

MAR 3 1 2009

OFFICE OF PETITIONS

In re Application of
Egendorf
Application No. 09/975,839
Filed: October 11, 2001
Issued: December 13, 2005
Attorney Docket No.22188-002001

:DECISION DISMISSING PTA
:RECONSIDERATION

This decision is in response to applicant's REQUEST FOR RECONSIDERATION OF PATENT TERM ADJUSTMENT on April 11, 2007[1] requesting that the Office extend the term of the patent from a determination of two hundred and ninety (290)days to a determination of seven hundred and seventeen (717)days.

Applicant's letter regarding PTA is **DISMISSED as being filed untimely.** Because the petition is being dismissed as untimely, the Office will not address the merits of patentee's arguments.

Rules, Regulations, and Statutes

35 USC 154(b)(4)(A) provides:

APPEAL OF PATENT TERM ADJUSTMENT DETERMINATION.-

(A) An applicant dissatisfied with a determination made by the Director under paragraph (3) shall have remedy by a civil action against the Director filed in the United States District Court for the District of Columbia within 180 days after the grant of the patent. Chapter 7 of title 5 shall apply to such action. Any final judgment resulting in a change to the period of adjustment of the patent term shall be served on the Director, and the Director shall thereafter alter the term of the patent to reflect such change.

37 CFR 1.705(d) and (e) provide:

[1]It is noted that the patent issued on December 13, 2005 and the request for reconsideration of the patent term adjustment is being filed approximately 16 months later.

(d) If there is a revision to the patent term adjustment indicated in the notice of allowance, the patent will indicate the revised patent term adjustment. If the patent indicates or should have indicated a revised patent term adjustment, any request for reconsideration of the patent term adjustment indicated in the patent must be filed within two months of the date the patent issued and must comply with the requirements of paragraphs (b)(1) and (b)(2) of this section. Any request for reconsideration under this section that raises issues that were raised, or could have been raised, in an application for patent term adjustment under paragraph (b) of this section shall be dismissed as untimely as to those issues.

(e) The periods set forth in this section are not extendable.

Because the applicants have not availed timely themselves of either an administrative remedy nor their statutory remedy, the petition is dismissed.

Any questions concerning this decision should be directed to Kery A. Fries, Senior Legal Advisor, at 571-272-7757.

Kery A. Fries

Kery A. Fries
Senior Legal Advisor
Office of Patent Legal Administration
Office of Deputy Commissioner
for Patent Examination Policy

UNITED STATES PATENT AND TRADEMARK OFFICE

Commissioner for Patents
United States Patent and Trademark Office
P.O. Box 1450
Alexandria, VA 22313-1450
www.uspto.gov

Paper No.

FISH & RICHARDSON PC
P.O. BOX 1022
MINNEAPOLIS MN 55440-1022

COPY MAILED
JAN 20 2010

In re Patent No. 6976008	:	
Issue Date: 12/13/2005	:	
Application Number: 09/975839	:	NOTICE
Filing or 371(c) Date: 10/11/2001	:	
Attorney Docket Number: 22188-002005	:	

This is a notice regarding your request for acceptance of a fee deficiency submission under 37 CFR 1.28 filed on October 16, 2009.

The Office no longer investigates or rejects original or reissue patent under 37 CFR 1.56. **1098 Off. Gaz. Pat. Office 502 (January 3, 1989)**. Therefore, nothing in this Notice is intended to imply that an investigation was done.

Your fee deficiency submission under 37 CFR 1.28 is hereby **ACCEPTED**.

This patent is no longer entitled to small entity status. Accordingly, all future fees paid in this patent must be paid at the large entity rate.

Inquiries related to this communication should be directed to the undersigned at (571) 272-3231.

D Wood

Douglas Wood
Attorney
Office of Petitions

UNITED STATES PATENT AND TRADEMARK OFFICE

COMMISSIONER FOR PATENTS
UNITED STATES PATENT AND TRADEMARK OFFICE
WASHINGTON, D.C. 20231
www.uspto.gov

Paper No. 5

Steven F. Weinstock
Abbott Laboratories
D-377/ AP6D-2
100 Abbott Park Road
Abbott Park IL 60064-6050

COPY MAILED

MAY 2 0 2002

OFFICE OF PETITIONS

In re Application of
Amdahl
Application No. 09/975,853
Filed: October 12, 2001
Attorney Docket No. 6741.US.01
FOR: A METHOD OF DETERMINING THE INITIAL DOSE OF VITAMIN D COMPOUNDS

DECISION GRANTING PETITION

This is a decision on the petition filed February 26, 2002 (certificate of mailing date February 5, 2002) to accord a filing date of October 12, 2001 to the above-identified application.

The application was deposited on October 12, 2001. However, on November 15, 2001, the Office of Initial Patent Examination mailed a "Notice of Incomplete Nonprovisional Application" requiring drawings of applicant's invention and stating that the filing date would be the date of receipt of the omitted drawings. It is noted that the specification filed on October 12, 2001 describes drawings containing Figures 1 and 2, but no drawings were filed on October 12, 2001.

As stated in MPEP 601.01(f), it is the practice of the United States Patent and Trademark Office (PTO) to treat an application that contains at least one process or method claim as an application for which a drawing is not necessary for an understanding of the invention under 35 USC 113 (first sentence.)

MPEP 601.01(f) also states that:

> A non provisional application having at least one claim, or a provisional application having at least some disclosure, directed to the subject matter discussed above for which a drawing is usually not considered essential for a filing date, describing drawing figures in the specification, but filed without all of the drawing figures referred to in the specification as discussed in MPEP 601.01(g), so long as the application contains something that can be construed as a written description.

This application contains method claims. Therefore, the application should have been treated as an application filed without all of the drawing figures referred to in the specification as discussed in MPEP 601.01(g).

MPEP 601.01(g) states that if an application is filed without all of the drawing figures referred to in the specification, a "Notice of Omitted Items" is mailed indicating that the application has been accorded a filing date, but is lacking some of the figures of drawings described in the specification.

In view of the above, the "Notice" mailed November 15, 2001 was mailed in error and is hereby withdrawn.

The application is entitled to a filing date of October 12, 2001. The petition is granted.

The proposed drawings of Figures 1 and 2 will be considered by the examiner for sufficiency of illustration and new matter. See MPEP 608.02.

Pursuant to petitioner's request, the $130.00 petition fee will be credited to deposit account no. 01-0025.

The application is being returned to the Office of Initial Patent Examination for further processing with a filing date of October 12, 2001, and for indication in PTO records that "0" sheets of drawings were present on filing.

Thereafter, the application will be forwarded to Technology Center 1600 for examination in due course.

Telephone inquiries specific to this matter should be directed to Petitions Attorney E. Shirene Willis at (703) 308-6712.

Beverly M. Flanagan
Supervisory Petitions Examiner
Office of Petitions
Office of the Deputy Commissioner
for Patent Examination Policy

UNITED STATES PATENT AND TRADEMARK OFFICE

COMMISSIONER FOR PATENTS
UNITED STATES PATENT AND TRADEMARK OFFICE
P.O. BOX 1450
ALEXANDRIA, VA 22313-1450
www.uspto.gov

STEVEN F. WEINSTOCK
ABBOTT LABORATORIES
100 ABBOTT PARK ROAD
DEPT. 377/AP6A
ABBOTT PARK, IL 60064-6008

COPY MAILED

APR 1 5 2004

OFFICE OF PETITIONS

In re Application of
Amdahl, Michael J.
Application No. 09/975,853
Filed: October 12, 2001
Attorney Docket No. 6742.US.01

ON PETITION

This is a decision on the petition under 37 C.F.R. § 1.137(b), filed February 13, 2004, to revive the above-identified application.

The petition is **granted.**

This application became abandoned for failure to timely reply within three months to the non-final Office action mailed August 4, 2003. No extensions of time under the provisions of 37 CFR 1.136(a) were obtained. Accordingly, this application became abandoned on November 5, 2003.

Petitioner has met the requirements to revive the above-identified application pursuant to 37 CFR 1.137(b).

This matter is now being forwarded to Technology Center 1600 for further examination on the merits.

Telephone inquiries should be directed to the undersigned at (703) 306-0482.

Liana Chase
Petitions Examiner
Office of Petitions
Office of the Deputy Commissioner
for Patent Examination Policy

DOCKET NO.: 205827US2/nhd

OIPE JC06
AUG 3 0 2004
PATENT & TRADEMARK OFFICE

IN THE UNITED STATES PATENT AND TRADEMARK OFFICE

IN RE APPLICATION OF: GROUP: 2171

Tetsuro MOTOYAMA, et al.

SERIAL NO: 09/975,939 EXAMINER: COBY, Frantz

FILED: October 15, 2001

FOR: METHOD AND SYSTEM OF REMOTE MONITORING AND SUPPORT OF DEVICES, EXTRACTING DATA FROM DIFFERENT TYPES OF EMAIL MESSAGES, AND STORING DATA ACCORDING TO DATA STRUCTURES DETERMINED BY THE MESSAGE TYPES

APPLICATION OF PREVIOUSLY PAID ISSUE FEE IN ACCORDANCE WITH SECTION 1308.01 MPEP

Mail Stop Issue Fee
Commissioner for Patents
P.O. Box 1450
Alexandria, VA 22313-1450

Sir:

The above-identified application was withdrawn from Issue after payment of the Issue Fee in the amount of $1330.00. Enclosed herewith is the Decision on Withdrawal from Issue. The application has now been allowed again and since a refund of the previously paid Issue Fee has not been requested, it is now requested that the previously paid Issue Fee be applied to the Issue Fee being paid herewith.

Respectfully Submitted,

OBLON, SPIVAK, McCLELLAND,
MAIER & NEUSTADT, P.C.

Paul Sacher

Marvin J. Spivak
Registration No. 24,913

Customer Number
22850
Tel. (703) 413-3000
Fax. (703) 413-2220
(OSMMN 05/04)

Paul Sacher
Registration No. 43,418

205827US-2

OIPE JC68
AUG 3 0 2004
PATENT & TRADEMARK OFFICE

IN THE UNITED STATES PATENT & TRADEMARK OFFICE

IN RE APPLICATION OF:	:
Tetsuro MOTOYAMA, et al.	: GROUP ART UNIT: 2171
SERIAL NO: 09/975,939	:
RCE FILED: HEREWITH	: EXAMINER: COBY, F.

FOR: METHOD AND SYSTEM OF REMOTE MONITORING AND SUPPORT OF DEVICES, EXTRACTING DATA FROM DIFFERENT TYPES OF EMAIL MESSAGES, AND STORING DATA ACCORDING TO DATA STRUCTURES DETERMINED BY THE MESSAGE TYPES

PETITION TO WITHDRAW FROM ISSUE UNDER 37 C.F.R. § 1.313(c)(2)

BOX: DAC
COMMISSIONER FOR PATENTS
ALEXANDRIA, VIRGINIA 22313

ATTN: OFFICE OF PETITIONS
FRANCIS HICKS

SIR:

Applicants respectfully request that the above-identified application be withdrawn from issue pursuant to 37 C.F.R. § 1.313(c)(2) so that the Request for Continued Examination (RCE) and the Information Disclosure Statement filed herewith may be considered by the Examiner upon granting of this petition.

In accordance with 37 C.F.R. § 1.17(i) the required fee for filing this 37 C.F.R. § 1.313(c)(2) petition is included herewith.

COPY

Application No. 09/975,939
Inventor: Tetsuro MOTOYAMA, et al.
Withdraw From Issue Filed Concurrently w/RCE

Accordingly, it is respectfully requested that the petition be granted and that the above-identified application be withdrawn from issue and returned to the Examiner for consideration of the concurrently filed Information Disclosure Statement and the references cited therein.

Respectfully submitted,

OBLON, SPIVAK, McCLELLAND,
MAIER & NEUSTADT, P.C.

James J. Kulbaski
Attorney of Record
Registration No. 34,648
Kurt M. Berger, Ph.D.
Registration No. 51,461

Customer Number
22850

Phone No. (703) 413-3000
Fax No. (703) 413-2220
JJK/KMB/des

COPY

UNITED STATES PATENT AND TRADEMARK OFFICE

COMMISSIONER FOR PATENTS
UNITED STATES PATENT AND TRADEMARK OFFICE
P.O. BOX 1450
ALEXANDRIA, VA 22313-1450
www.uspto.gov

Paper No. 13

OSTROLENK FABER GERB & SOFFEN
1180 AVENUE OF THE AMERICAS
NEW YORK, NY 10036-8403

COPY MAILED

FEB 03 2004

OFFICE OF PETITIONS

In re Application of	:	
Sergio Morini et al	:	
Application No. 09/975,946	:	ON PETITION
Filed: October 15, 2001	:	
Attorney Docket No. IR-2095	:	

This is a decision on the petition under 37 CFR 1.137(b), filed January 23, 2004, to revive the above-identified application.

The petition is **GRANTED**.

The above-identified application became abandoned for failure to reply in a timely manner to the non-final Office action mailed March 12, 2003, which set a shortened statutory period for reply of three (3) months. Extensions of time under the provisions of 37 CFR 1.136(a) were obtained. Accordingly, the above-identified application became abandoned on September 13, 2003.

37 CFR 1.137(b)(3) requires a statement that the entire delay in filing the required reply from the due date for the reply until the filing of a grantable petition pursuant to 37 CFR 1.137(b) was unintentional. If the statement contained in the instant petition varies from the language required by 37 CFR 1.137(b)(3), the statement contained in the instant petition is being construed as the statement required by 37 CFR 1.137(b)(3) and petitioner must notify the Office if this is **not** a correct interpretation of the statement contained in the instant petition.

Telephone inquiries concerning this decision should be directed to Wan Laymon at (703) 305-9282.

The application file is being forwarded to Technology Center AU 2819.

Wan Laymon
Wan Laymon
Petitions Examiner
Office of Petitions
Office of the Deputy Commissioner
for Patent Examination Policy

UNITED STATES PATENT AND TRADEMARK OFFICE

COMMISSIONER FOR PATENTS
UNITED STATES PATENT AND TRADEMARK OFFICE
P.O. BOX 1450
ALEXANDRIA, VA 22313-1450
www.uspto.gov

JJGJR.: 03-05

Paper No:__

MCDONNELL BOEHNEN
HULBERT& BERGHOFF LLP
300 S. WACKER DRIVE
32ND FLOOR
CHICAGO IL 60606

COPY MAILED

MAR 1 8 2005

OFFICE OF PETITIONS

In re Application of	:	
Dygert, et al.	:	
Application No. 09/976,038	:	ON PETITION
Filed: 15 October, 2001	:	
Attorney Docket No. 1617.1001CIP	:	
(MBHB 03-622A)	:	

This is a decision on the petition under ¶(a) of 37 C.F.R. §1.47, filed on 27 September, 2004.

The Office regrets the delay in addressing this matter.

The petition is **DISMISSED**.

NOTES:

(1) Any reply must include a renewed petition (and fee) must include a petition under 37 C.F.R. §1.47 and must be submitted within two (2) months from the mail date of this decision. Extensions of time under 37 C.F.R. §1.136(a) are permitted. The reconsideration request should include a cover letter entitled "Petition under 37 C.F.R. §1.47";

(2) Thereafter, there will be no further reconsideration of this matter.

BACKGROUND

The record indicates:

- there are three related but certainly separate applications, to wit:

  –the parent 09/227,086 (the '086 application) (filed 5 January, 1999, and issued as Patent No. 6,304,523 on 16 October, 2001 (the '523 patent));

  –the instant application (a continuation-in-part of the parent) 09/976,038 (the '038 application) (filed 15 October, 2001); and

  –the re-issue application (of the '523 patent) 10/687,510 (filed 16 October, 2003) (the '510 application);

- Petitioner Joseph P. Herndon (Reg. No. 50,469) avers that the instant '038 application was filed in error and without deceptive intent (by prior Counsel) with only three co-inventors listed (to wit: Timothy W. Dygert (Mr. Dygert), Sethu K. Madhavan (Mr. Madhavan), and Gerard V. Talatinian (Mr. Talatinian), and an oath/declaration signed by Messrs. Dygert, Madhavan and Talatinian was filed in the application;

- however, Petitioner avers that he has come to know that Scott A. Jones (Mr. Jones) and Douglas M. Keenan (Mr. Keenan) also were co-inventors, and to this end Petitioner has sought to obtain the signatures of all five co-inventors on a new oath/declaration and statements from all inventors as to the lack of deceptive intent, and thereby also obtain a correction of inventorship under 37 C.F.R. §1.48 (filed separately and before the Examiner);

- two pieces of correspondence (dated 28 May, 2004, and 9 June, 2004, respectively) from Petitioner to Mr. Keenan set out Petitioner's efforts and forwarded to Mr. Keenan a copy of the re-issue application (the '510 application) and an oath/declaration for that application;

- however, there is no evidence in the record that Petitioner transmitted to Mr. Keenan a copy of the instant application;

- two pieces of correspondence–one unsigned and undated but submitted with a copy of the envelope evidencing Mr. Keenan's return address label and the other signed by Mr. Keenan and dated "9 June 04" both contain in one form or another the statement: "I . . . have no interest in signing anything";

- an inquiry to Petitioner at the time this matter was taken up in the Office of Petitions on 17 March, 2004, as to whether he possessed documentation evidencing that a copy of the entire instant application–description, claims, abstract and drawing–was sent to Mr. Keenan and Petitioner's response was that a copy of the instant application had not been sent.

ANALYSIS

The regulations at 37 C.F.R. §1.47 provide in pertinent part:

> **§ 1.47 Filing when an inventor refuses to sign or cannot be reached.**
> (a) If a joint inventor refuses to join in an application for patent or cannot be found or reached after diligent effort, the application may be made by the other inventor on behalf of himself or herself and the nonsigning inventor. The oath or declaration in such an application must be accompanied by a petition including proof of the pertinent facts, the fee set forth in § 1.17(h), and the last known address of the nonsigning inventor. The nonsigning inventor may subsequently join in the application by filing an oath or declaration complying with §1.63.
>
> * * *

The regulations at 37 C.F.R. §1.63 provide in pertinent part:

> **§1.63 Oath or declaration.**
>
> (b) In addition to meeting the requirements of paragraph (a)of this section, the oath or declaration must also:
>
> (1)Identify the application to which it is directed;
>
> (2) State that the person making the oath or declaration has reviewed and understands the contents of the application, Including the claims, as amended by any amendment specifically referred to in the oath or declaration; and
>
> (3) State that the person making the oath or declaration acknowledges the duty to disclose to the Office all information known to the person to be material to patentability as defined in § 1.56.

When one alleges a refusal of the inventor to sign the application papers, the circumstances of the presentation of the application papers and of the refusal must be specified in a statement of facts by the person who, *inter alia*, presented the inventor with the application papers and/or to whom the refusal was made.

The commentary at MPEP §409.03(d) provides:

409.03(d) Proof of Unavailability or Refusal

INVENTOR CANNOT BE REACHED

Where inability to find or reach a nonsigning inventor "after diligent effort" is the reason for filing under 37 C.F.R. §1.47, a statement of facts should be submitted that fully describes the exact facts which are relied on to establish that a diligent effort was made.

The fact that a nonsigning inventor is on vacation or out of town and is therefore temporarily unavailable to sign the declaration is not an acceptable reason for filing under 37 C.F.R. §1.47.

Furthermore, the fact that an inventor is hospitalized and/or is not conscious is not an acceptable reason for filing under 37 C.F.R. §1.47. 37 C.F.R. §1.43 may be available under these circumstances. See MPEP §409.02. Such a petition under 37 C.F.R. §1.47 will be dismissed as inappropriate.

The statement of facts must be signed, where at all possible, by a person having firsthand knowledge of the facts recited therein. Statements based on hearsay will not normally be accepted. Copies of documentary evidence such as internet searches, certified mail return receipts, cover letters of instructions, telegrams, that support a finding that the nonsigning inventor could not be found or reached should be made part of the statement. The steps taken to locate the whereabouts of the nonsigning inventor should be included statement of facts. It is important that the statement contain facts as opposed to conclusions.

REFUSAL TO JOIN

A refusal by an inventor to sign an oath or declaration when the inventor has not been presented with the application papers does not itself suggest that the inventor is refusing to join the application unless it is clear that the inventor understands exactly what he or she is being asked to sign and refuses to accept the application papers. A copy of the application papers should be sent to the last known address of the nonsigning inventor, or, if the nonsigning inventor is represented by counsel, to the address of the nonsigning inventor's attorney. The fact that an application may contain proprietary information does not relieve the 37 C.F.R. §1.47 applicant of the responsibility to present the application papers to the inventor if the inventor is willing to receive the papers in order to sign the oath or declaration. It is noted that the inventor may obtain a complete copy of the application, unless the inventor has assigned his or her interest in the application, and the assignee has requested that the inventor not be permitted access. See MPEP §106. It is reasonable to require that the inventor be presented with the application papers before a

petition under 37 C.F.R. §1.47 is granted since such a procedure ensures that the inventor is apprised of the application to which the oath or declaration is directed. In re Gray, 115 USPQ 80 (Comm'r Pat. 1956).

Where a refusal of the inventor to sign the application papers is alleged, the circumstances of the presentation of the application papers and of the refusal must be specified in a statement of facts by the person who presented the inventor with the application papers and/or to whom the refusal was made. Statements by a party not present when an oral refusal is made will not be accepted.

Proof that a bona fide attempt was made to present a copy of the application papers (specification, including claims, drawings, and oath or declaration) to the nonsigning inventor for signature, but the inventor refused to accept delivery of the papers or expressly stated that the application papers should not be sent, may be sufficient.

When there is an express oral refusal, that fact along with the time and place of the refusal must be stated in the statement of facts. When there is an express written refusal, a copy of the document evidencing that refusal must be made part of the statement of facts. The document may be redacted to remove material not related to the inventor's reasons for refusal.

When it is concluded by the 37 C.F.R. §1.47 applicant that a nonsigning inventor's conduct constitutes a refusal, all facts upon which that conclusion is based should be stated in the statement of facts in support of the petition or directly in the petition. If there is documentary evidence to support facts alleged in the petition or in any statement of facts, such evidence should be submitted. Whenever a nonsigning inventor gives a reason for refusing to sign the application oath or declaration, that reason should be stated in the petition.

Thus, not only <u>must a copy of the entire application must be sent to the last known address of the non-signing inventor</u> (or the estate representative) with a request that he/she sign the declaration for the patent application–<u>and evidence of that transmittal submitted</u>–but also a reasonable effort must be made to ascertain a current or last known address, and the petition (with fee) must state over the signature and registration number of the Petitioner the last known address and, if appropriate, evidence of the due diligence effort ascertaining same.

Alternatively, an oath or declaration for the patent application in compliance with 37 C.F.R. §§1.63 and 1.64 must be presented.

The declaration must set forth the inventor's residence, citizenship and post office address. An oath or declaration in compliance with 37 C.F.R. §§1.63 and 1.64 signed by the Rule 1.47

applicant is required.[1]

CONCLUSION

Petitioner acknowledges that he has not addressed the instant application with or presented the entire application to Mr. Keenan. Whatever Mr. Keenan's expressed position as to another application, the instant application is a separate matter and must be attended to as such. The procedure is not an exercise in futility, but, rather, a methodology of protecting due process and potential property-right interests.

Therefore, the instant petition hereby is **dismissed**.

Further correspondence with respect to this matter should be addressed as follows:

By mail: Commissioner for Patents[2]
P.O. Box 1450
Alexandria, VA 22313-1450

By FAX: (703) 872-9306 (IFW Formal Filings)
ATTN.: Office of Petitions

By hand: Mail Stop: Petition
Customer Service Window
Randolph Building
401 Dulany Street
Alexandria, VA 22314

Telephone inquiries regarding this decision should be directed to the undersigned at (571) 272-3214.

John J. Gillon, Jr.
Senior Attorney
Office of Petitions

---

[1] See: MPEP 409.03(b).

[2] To determine the appropriate addresses for other subject-specific correspondence, refer to the USPTO Web site at www.uspto.gov.

UNITED STATES PATENT AND TRADEMARK OFFICE

Commissioner for Patents
United States Patent and Trademark Office
P.O. Box 1450
Alexandria, VA 22313-1450
www.uspto.gov

JJGJR.: 06-05

Paper No: __

MCDONNELL BOEHNEN
HULBERT& BERGHOFF LLP
300 S. WACKER DRIVE
32ND FLOOR
CHICAGO IL 60606

COPY MAILED

JUN 16 2005

OFFICE OF PETITIONS

In re Application of	:	
Dygert, et al.	:	
Application No. 09/976,038	:	ON PETITION
Filed: 15 October, 2001	:	
Attorney Docket No. 1617.1001CIP	:	
(MBHB 03-622A)	:	

This is a decision on the renewed petition under ¶(a) of 37 C.F.R. §1.47, filed on 11 April, 2005.

The petition is **GRANTED**.

BACKGROUND

The record indicates:

- there are three related but certainly separate applications, to wit:

  –the parent 09/227,086 (the '086 application) (filed 5 January, 1999, and issued as Patent No. 6,304,523 on 16 October, 2001 (the '523 patent));

  –the instant application (a continuation-in-part of the parent) 09/976,038 (the '038 application) (filed 15 October, 2001); and

–the re-issue application (of the '523 patent) 10/687,510 (filed 16 October, 2003) (the '510 application);

- Petitioner Joseph P. Herndon (Reg. No. 50,469) has averred that:

  –the instant '038 application was filed in error and without deceptive intent (by prior Counsel) with only three co-inventors listed (to wit: Timothy W. Dygert (Mr. Dygert), Sethu K. Madhavan (Mr. Madhavan), and Gerard V. Talatinian (Mr. Talatinian), and an oath/declaration signed by Messrs. Dygert, Madhavan and Talatinian was filed in the application;

  –however, Petitioner has come to know that Scott A. Jones (Mr. Jones) and Douglas M. Keenan (Mr. Keenan) also were co-inventors, and to this end Petitioner has sought to obtain the signatures of all five co-inventors on a new oath/declaration and statements from all inventors as to the lack of deceptive intent, and thereby also obtain a correction of inventorship under 37 C.F.R. §1.48 (filed separately and before the Examiner);

- also included with the original petition were

  –two pieces of correspondence (dated 28 May, 2004, and 9 June, 2004, respectively, and from Petitioner to Mr. Keenan) attached to the original petition set out Petitioner's efforts and forwarded to Mr. Keenan a copy of the re-issue application (the '510 application) and an oath/declaration for that application; and

  –two pieces of correspondence–one unsigned and undated but submitted with a copy of the envelope evidencing Mr. Keenan's return address label and the other signed by Mr. Keenan and dated "9 June 04" both contain in one form or another the statement: "I . . . have no interest in signing anything";

however, because there was no evidence in the record that Petitioner transmitted to Mr. Keenan a copy of the instant application (and an inquiry to Petitioner at the time this matter was taken up in the Office of Petitions on 17 March, 2004, as to whether he possessed documentation evidencing that a copy of the entire instant application–description, claims, abstract and drawing–was sent to Mr. Keenan and <u>Petitioner's response was that a copy of the instant application had not been sent</u>), thus the original petition was dismissed on 18 March, 2005;

- the instant petition was filed on 11 April, 2005, and now is supported with documentation evidencing that the entire instant application was transmittal to Mr. Keenan and Petitioner avers that Mr. Keenan has not signed the oath/declaration.

This application and papers have been reviewed and found in compliance with 37 C.F.R. §1.47(a).

This application hereby is **ACCORDED status under 37 C.F.R. §1.47(a)**.

As provided under 37 C.F.R. §1.47(a), the Office will forward notice of this application's filing to the non-signing inventor at the address given in the petition.

Notice of the filing of this application also will be published in the Official Gazette.

This file is being released to OIPE for processing as necessary to reflect the instant decision before being released for examination in due course.

Telephone inquiries concerning this decision may be directed to the undersigned at (571) 272-3214.

John J. Gillon, Jr.
Senior Attorney
Office of Petitions

UNITED STATES PATENT AND TRADEMARK OFFICE

Commissioner for Patents
United States Patent and Trademark Office
P.O. Box 1450
Alexandria, VA 22313-1450
www.uspto.gov

JJGJR.: 06-05

Paper No: __

DOUGLAS M. KEENAN
505 TAMARACK LANE
NOBLESVILLE, INDIANA 46060

COPY MAILED

JUN 16 2005

OFFICE OF PETITIONS

In re Application of :
Dygert, et al. :
Application No. 09/976,038 : COMMUNICATION
Filed: 15 October, 2001 :
Attorney Docket No. 1617.1001CIP :
(MBHB 03-622A) :

Dear Douglas M. Keenan:

You are named as inventor in the above identified United States patent application, filed under the provisions of 35 U.S.C. §116 (United States Code), and 37 C.F.R. §1.47,[1] ¶a, Rules of Practice in Patent Cases. Should a patent be granted on the application you will be designated therein as inventor.

---

[1] The regulations at 37 C.F.R. §1.47 provide:

§ 1.47 Filing when an inventor refuses to sign or cannot be reached.

(a) If a joint inventor refuses to join in an application for patent or cannot be found or reached after diligent effort, the application may be made by the other inventor on behalf of himself or herself and the nonsigning inventor. The oath or declaration in such an application must be accompanied by a petition including proof of the pertinent facts, the fee set forth in §1.17(h), and the last known address of the nonsigning inventor. The nonsigning inventor may subsequently join in the application by filing an oath or declaration complying with §1.63.

(b) Whenever all of the inventors refuse to execute an application for patent, or cannot be found or reached after diligent effort, a person to whom an inventor has assigned or agreed in writing to assign the invention, or who otherwise shows sufficient proprietary interest in the matter justifying such action, may make application for patent on behalf of and as agent for all the inventors. The oath or declaration in such an application must be accompanied by a petition including proof of the pertinent facts, a showing that such action is necessary to preserve the rights of the parties or to prevent irreparable damage, the fee set forth in §1.17(h), and the last known address of all of the inventors. An inventor may subsequently join in the application by filing an oath or declaration complying with §1.63.

© The Office will send notice of the filing of the application to all inventors who have not joined in the application at the address(es) provided in the petition under this section, and publish notice of the filing of the application in the *Official Gazette*. The Office may dispense with this notice provision in a continuation or divisional application, if notice regarding the filing of the prior application was given to the nonsigning inventor(s).

[47 Fed. Reg. 41275, Sept. 17, 1982, effective Oct. 1, 1982; 48 Fed. Reg. 2709, Jan. 20, 1983, effective Feb. 27, 1983; revised, 62 Fed. Reg. 53131, Oct. 10, 1997, effective Dec. 1, 1997; revised, 65 Fed. Reg. 54604, Sept. 8, 2000, effective Nov. 7, 2000]

As a named inventor you are entitled to inspect any paper in the file wrapper of the application, order copies of all or any part thereof (at a prepaid cost per 37 C.F.R. §1.19) or make your position of record in the application. Alternatively, you may arrange to do any of the preceding through a registered patent attorney or agent presenting written authorization from you. If you care to join the application, counsel of record (see below) would presumably assist you. Joining in the application would entail the filing of an appropriate oath or declaration by you pursuant to 37 C.F.R. §1.63.

Requests for information regarding your application should be directed to the File Information Unit at (703) 308-2733.

Information regarding how to pay for and order a copy of the application, or a specific paper in the application, should be directed to Certification Division at (703) 308-9726 or toll-free: (800) 972-6382 (outside the Washington D.C. area).

Telephone inquiries concerning this letter may be directed to the undersigned at (571) 272-3214.

John J. Gillon, Jr.
Senior Attorney
Office of Petitions

Counsel of Record:
MCDONNELL BOEHNEN
HULBERT& BERGHOFF LLP
300 S. WACKER DRIVE
32ND FLOOR
CHICAGO IL 60606

UNITED STATES PATENT AND TRADEMARK OFFICE

Commissioner for Patents
United States Patent and Trademark Office
P.O. Box 1450
Alexandria, VA 22313-1450
www.uspto.gov

McDONNELL BOEHNEN HULBERT & BERGHOFF LLP
300 SOUTH WACKER DRIVE
32ND FLOOR
CHICAGO, IL 60606

COPY MAILED
JUN 23 2005
OFFICE OF PETITIONS

In re Application of	:	
Timothy W. Dygert et al	:	
Application No. 09/976,038	:	NOTICE
Filed: October 15, 2001	:	
Attorney Docket No. 1617.1001CIP	:	

The purpose of this communication is to inform you that the instant application, which has received Patent No. 6,912,546 and an issue date of June 28, 2005, is being withdrawn from issue pursuant to 37 CFR 1.313.

The application is being withdrawn from issue to permit consideration of the petitions filed September 27, 2004 and April 11, 2005 to correct the inventorship in this application. This withdrawal was requested by the Director, Office of Petitions.

The issue fee is refundable upon written request. However, if the application is again found allowable, the issue fee can be applied toward payment of the issue fee in the amount identified on the new Notice of Allowance and Issue Fee Due upon written request. This request and any balance due must be received on or before the due date noted in the new Notice of Allowance in order to prevent abandonment of the application.

Telephone inquiries concerning this matter may be directed to Frances Hicks at (571) 272-3218.

for Brian Hearn
Charles Pearson
Director
Office of Petitions

UNITED STATES PATENT AND TRADEMARK OFFICE

UNITED STATES DEPARTMENT OF COMMERCE
United States Patent and Trademark Office
Address: COMMISSIONER FOR PATENTS
P.O. Box 1450
Alexandria, Virginia 22313-1450
www.uspto.gov

ARNOLD & PORTER LLP
555 TWELFTH STREET, N.W.
ATTN: IP DOCKETING
WASHINGTON, DC 20004

Mail Date: 04/20/2010

Applicant	: Nordine Cheikh	: DECISION ON REQUEST FOR
Patent Number	: 7655469	: RECALCULATION of PATENT
Issue Date	: 02/02/2010	: TERM ADJUSTMENT IN VIEW
Appliction No	: 09/976,054	: OF WYETH AND NOTICE OF INTENT TO
Filed	: 10/15/2001	: ISSUE CERTIFICATE OF CORRECTION
		:

The Request for Recalculation is **GRANTED** to the extent indicated.

The patent term adjustment has been determined to be **914** days. The USPTO will *sua sponte* issue a certificate of correction reflecting the amount of PTA days determined by the recalculation.

Prior to the issuance of the certificate of correction, the USPTO will afford patentee an opportunity to be heard and request reconsideration. Accordingly, patentee has **one month or thirty (30) days**, whichever is longer, to file a request for reconsideration of this patent term adjustment calculation. See 35 U.S.C. 154(b)(3)(B)(ii) and 37 CFR 1.322(a)(4). No extensions of time will be granted under 37 CFR 1.136.

Patentee should use document code PET.OP if electronically filing a request for reconsideration of this patent term adjustment calculation. The patentee must also include the information required by 37 CFR 1.705(b)(2) and the fee required by 37 CFR 1.18(e). If patentee does not file a timely request for reconsideration of this patent term adjustment calculation including the information required by 37 CFR 1.705(b)(2) and the fee required by 37 CFR 1.18(e), the USPTO will issue a certificate of correction reflecting the PTA determination noted above.

Patentee should be aware that in order to preserve the right to review in the United States District Court for the District of Columbia of the USPTO patent term adjustment determination, patentee must ensure that he or she also take the steps required under 35 U.S.C. 154(b)(4)(A) in a timely manner. Nothing in the request for recalculation should be construed as providing an alternative time frame for commencing a civil action under 35 U.S.C. 154(b)(4)(A).

Any questions concerning this decision should be directed to the Office of Patent Legal Administration at 571-272-7702.

UNITED STATES PATENT AND TRADEMARK OFFICE

Commissioner for Patents
United States Patent and Trademark Office
P.O. Box 1450
Alexandria, VA 22313-1450
www.uspto.gov

COPY MAILED

NOV 06 2009

OFFICE OF PETITIONS

BANNER & WITCOFF LTD
1100 13th STREET NW
SUITE 1200
WASHINGTON DC 20005-4051

In re Application of :
Koskimies Oskari :
Application No. 09/976,091 : ON PETITION
Filed: October 15, 2001 :
Attorney Docket No. 004770.0054

This is a decision on the petition under 37 CFR 1.137(b) and 37 CFR 1.137(f), filed December 14, 2005.

The petition is **DISMISSED** as moot.

A review of the application papers present on filing does not indicate that a non-publication request was made. While applicant indicated his intent to file such a request by indicating it on the application transmittal form, the Office did not receive the non-publication request.

As such, the instant petition is dismissed as moot. The "Rescission of Previous Nonpublication Request" will remain in the file, but has not been entered.

The $1500 petition fee has been refunded to Deposit Account No. 19-0733.

The application is being forwarded to the Office of Data Management for processing into a patent.

Telephone inquiries regarding this decision should be directed to the undersigned at (571)272-3207.

Cliff Congo
Petitions Attorney
Office of Petitions

SPE RESPONSE FOR CERTIFICATE OF CORRECTION 9/976135

Paper No.: _____

DATE : 11/15/05

TO SPE OF : ART UNIT 3643

SUBJECT : Request for Certificate of Correction on Patent No.: 6932688 B2

A response is requested with respect to the accompanying request for a certificate of correction.

Please complete this form and return with file, within **7** days to:
Palm location **7580, Certificates of Correction Branch – South Tower – 9A22**
If response is for an IFW, **return to employee (named below) via PUBSCofC Team in MADRAS.**
With respect to the change(s) requested, correcting Office and/or Applicant's errors, should the patent read as shown in the certificate of correction (COCIN)? No new matter should be introduced, nor should the scope or meaning of the claims be changed.

Virginia Tolbert

Thank You For Your Assistance

Certificates of Correction Branch
Tel. No. 703-308-9390 ext. 113

The request for issuing the above-identified correction(s) is hereby:
Note your decision on the appropriate box.

- [X] **Approved** — **All** changes apply.
- [ ] **Approved in Part** — Specify below which changes **do not** apply.
- [ ] **Denied** — State the reasons for denial below.

Comments:

PETER M. POON
SUPERVISORY PATENT EXAMINER

Peter M. Poon — 3643

SPE — **Art Unit**

BEST AVAILABLE COPY

Unit d States Patent and Trademark Office

Commissi ner for Patents
United States Patent and Trademark Office
Washington, D.C. 20231
www.uspto.gov

Paper No. 5

ROSS D. SNYDER & ASSOCIATES, INC.
115 WILO BASIN RD.
SUITE 107
AUSTIN TX 78746

COPY MAILED

MAR 2 0 2003

OFFICE OF PETITIONS

In re Application of
Jared Zerbe et al
Application No. 09/976,170
Filed: October 12, 2001
Attorney Docket No. 1726.7220801

DECISION ON PETITION
UNDER 37 CFR 1.78(a)(3)

This is a decision on the petition under 37 CFR 1.78(a)(3), filed February 15, 2003, to accept an unintentionally delayed claim under 35 U.S.C. § 120 for the benefit of priority to prior-filed nonprovisional Application No. 09/776,550, filed February 2, 2001.

The petition is **GRANTED**.

A petition for acceptance of a claim for late priority under 37 CFR 1.78(a)(3) is only applicable to those applications filed on or after November 29, 2000. Further, the petition is appropriate only after the expiration of the period specified in 37 CFR 1.78(a)(2)(ii). In addition, the petition under 37 CFR 1.78(a)(3) must be accompanied by:

> **(1)** the reference required by 35 U.S.C. § 120 and 37 CFR 1.78(a)(2)(i) of the prior-filed application, unless previously submitted;[1]
> **(2)** the surcharge set forth in § 1.17(t); and
> **(3)** a statement that the entire delay between the date the claim was due under 37 CFR 1.78(a)(2)(ii) and the date the claim was filed was unintentional. The Commissioner may require

---

[1] Any nonprovisional application or international application designating the United States of America claiming the benefit of one or more prior-filed copending applications or international applications designating the United States of America must contain or be amended to contain a reference (amendment to the first line of the specification following the title or in an application data sheet (ADS) to each such prior-filed application, identifying it by application number (consisting of the series code and serial number) or international application number and international filing date filing date and indicating the relationship of the applications. Cross references to other related applications may be made when appropriate (*see* § 1.14).

additional information where there is a question whether the delay was unintentional.

The instant pending application was filed on October 12, 2001, and was pending at the time of filing of the instant petition. A reference to the prior-filed nonprovisional application has been included in an amendment filed with the instant petition, as required by 37 CFR 1.78(a)(3)(i).

The instant nonprovisional application was filed after November 29, 2000, and the claim herein for the benefit of priority to the prior-filed application is submitted after expiration of the period specified in 37 CFR 1.78(a)(2)(ii). Also, the reference to the prior-filed application was submitted during the pendency of the instant nonprovisional application, for which the claim for benefit of priority is sought. *See* 35 U.S.C. § 120. Accordingly, having found that the instant petition for acceptance of an unintentionally delayed claim for the benefit of priority under 35 U.S.C. § 120 to the prior-filed application satisfies the conditions of 37 CFR 1.78(a)(3), the petition is granted.

The granting of the petition to accept the delayed benefit claim to the prior application under 37 CFR 1.78(a)(3) should <u>not</u> be construed as meaning that the instant application is entitled to the benefit of the filing date of the prior application. In order for the instant application to be entitled to the benefit of the prior application, all other requirements under 35 U.S.C. §120 and 37 CFR 1.78(a)(1) and (a)(2) must be met. Accordingly, the examiner will, in due course, consider this benefit claim and determine whether the instant application is entitled to the benefit of the earlier filing date.

A corrected Filing Receipt, which includes the priority claim to the prior-filed nonprovisional application, accompanies this decision on petition.

Any inquiries concerning this decision may be directed to Karen Creasy at (703) 305-8859.

This application is being forwarded to Technology Center Art Unit 2133 for consideration by the examiner of applicant's entitlement to claim benefit of priority under 35 U.S.C. § 120 to prior-filed Application No. 09/776,550, filed February 2, 2001.

Frances Hicks

Frances Hicks
Lead Petitions Examiner
Office of Petitions
Office of the Deputy Commissioner
for Patent Examination Policy

ATTACHMENT: Corrected Filing Receipt

UNITED STATES PATENT AND TRADEMARK OFFICE

Commissioner for Patents
United States Patent and Trademark Office
P.O. Box 1450
Alexandria, VA 22313-1450
www.uspto.gov

JAN 13 2005

Michael S. Gzybowski
Butzel Long
350 South Main Street
STE 300
Ann Arbor, MI 46802

Paper No. 20

In re Application of Takaaki Shimada et al Serial No. : 09/976,182 Filed : October 11, 2001 For : Disposable Pull-on Undergarment	: DECISION ON PETITION : TO WITHDRAW : HOLDING OF : ABANDONMENT :

This is a decision on petitioner's request filed via facsimile transmission on October 13, 2004, to review the holding of abandonment mailed September 16, 2004 for failure to respond to the Office action mailed December 4, 2003. As this petition has been filed pursuant to 37 CFR 1.181, no petition fee is required.

In support of the request, petitioner has submitted a copy of a response that was submitted via facsimile transmission on March 1, 2004. The response included a certificate of facsimile transmission dated March 1, 2004. Petitioner has also included a copy of a facsimile transmission report confirming transmission of the papers in question on March 1, 2004.

In view of the above, the Notice of Abandonment mailed September 16, 2004 is in error and is hereby vacated. The holding of abandonment is withdrawn. Upon the mailing of this decision, the application will be forwarded to the Examiner via the Legal Instruments Examiner for entry and consideration of the response filed March 1, 2004.

Summary: Holding of Abandonment Withdrawn.

John E. Kittle, Director
Groups 3730 and 3760
Phone: (571) 272-2975

ak/12/15/04

UNITED STATES PATENT AND TRADEMARK OFFICE

Commissioner for Patents
United States Patent and Trademark Office
Washington, D.C. 20231
www.uspto.gov

Paper No. 7

PATE PIERCE & BAIRD
215 SOUTH STATE STREET, SUITE 550
PARKSIDE TOWER
SALT LAKE CITY UT 84111

COPY MAILED

MAR 1 8 2003

OFFICE OF PETITIONS

In re Application of
Joseph V. Simmons et al
Application No. 09/976,187
Filed: October 12, 2001
Attorney Docket No. 3201.2.1

: DECISION ON PETITION
: UNDER 37 CFR 1.78(a)(6)

This is a decision on the petition under 37 CFR 1.78(a)(6), filed February 24, 2003, to accept an unintentionally delayed claim under 35 U.S.C. §119(e) for the benefit of a prior-filed provisional application.

The petition is **Granted.**

A petition under 37 CFR 1.78(a)(6) is only applicable to those applications filed on or after November 29, 2000. Further, the petition is appropriate only after expiration of the period specified in 37 CFR 1.78(a)(5)(ii) and must be filed during the pendency of the nonprovisional application. In addition, the petition must be accompanied by:

(1) the surcharge set forth in 37 CFR 1.17(t);

(2) a statement that the entire delay between the date the claim was due under 37 CFR 1.78(a)(5)(I) and the date the claim was filed was unintentional; and

(3) the reference to the prior-filed provisional application supplied in an application data sheet (ADS)(37 CFR 1.76) or as an amendment in the first sentence of the specification following the title. *See* 35 U.S.C. 119(e) and 37 CFR 1.78(a)(5)(iii). The Commissioner may require additional information where there is a question whether the delay was unintentional.

The instant pending nonprovisional application was filed on October 12, 2001 within twelve months of the filing date of the prior-filed provisional application, Application No. 60/240,197, which was filed on October 12, 2000, and for which priority is claimed. A reference to the prior-filed provisional application has been included in an amendment to the first sentence of the specification following the title.

The instant nonprovisional application was filed after November 29, 2000, and the claim for priority herein is submitted after expiration of the period specified in 37 CFR 1.78(a)(5)(ii). Also, the reference to the prior-filed provisional application was submitted during the pendency of the

nonprovisional application for which the benefit is sought. *See* 35 U.S.C. §119(e). Accordingly, having found that the instant petition satisfies the conditions of 37 CFR 1.78(a)(6) for acceptance of an unintentionally delayed claim for priority under 35 U.S.C. §119(e), the petition to accept an unintentionally delayed claim of benefit to prior-filed provisional Application No. 60/240,197 is granted.

The granting of the petition to accept the delayed benefit claim to the prior application under 37 CFR 1.78(a)(6) should not be construed as meaning that the instant application is entitled to the benefit of the filing date of the prior application. In order for the instant application to be entitled to the benefit of the prior application, all other requirements under 35 U.S.C. §119(e) and 37 CFR 1.78(a)(4) and (a)(5) must be met. Accordingly, the examiner will, in due course, consider this benefit claim and determine whether the instant application is entitled to the benefit of the earlier filing date.

A corrected Filing Receipt, which includes the priority claim to the prior-filed provisional application, accompanies this decision on petition.

Any inquiries concerning this decision may be directed to Karen Creasy at (703) 305-8859.

The application is being forwarded to Technology Center AU 2123 for processing the amendment filed February 24, 2003, and for consideration by the examiner of applicant's entitlement to claim for benefit of priority under 35 U.S.C. §119(e) to prior-filed provisional Application No. 60/240,197, filed October 12, 2000.

Frances Hicks

Frances Hicks
Lead Petitions Examiner
Office of Petitions
Office of the Deputy Commissioner
for Patent Examination Policy

ATTACHMENT: Corrected Filing Receipt

UNITED STATES PATENT AND TRADEMARK OFFICE

Commissioner for Patents
United States Patent and Trademark Office
P.O. Box 1450
Alexandria, VA 22313-1450
www.uspto.gov

COPY MAILED

SEP 28 2007

OFFICE OF PETITIONS

William O'Driscoll - 12-1
The Trane Company
3600 Pammel Creek Road
La Crosse, WI 54601

In re Application of

Vanderzee, et al. :

Application No. 09/976,194

: DECISION ON PETITION

Filed: October 11, 2001

:

Attorney Docket No. D-2732/WOD

This is a decision on the petition under 37 CFR 1.137(b) filed October 30, 2006. The petition will be treated as a petition to withdraw the holding of abandonment.

The petition under 37 CFR 1.181(a) to withdraw the holding of abandonment is **granted**.

The above-cited application became abandoned for failure to reply in a timely manner to the Notification of Non-Compliant Appeal Brief mailed July 26, 2006, which set a shortened period for reply of one (1) month from its mailing date. Extensions of the time set for reply were available pursuant to 37 CFR 1.136. A review of the application file reveals that a response in the form of an appeal brief was filed on October 30, 2006, with a request for an extension of time within the third month. Notwithstanding, a Notice of Abandonment was mailed on October 23, 2006.

It is determined that the response to the Notification of Non-Compliant Appeal Brief in the form of an appeal brief was timely filed and that the Notice of Abandonment was mailed prematurely as the appeal brief was received within the extendable period for reply to the Notification of Non-Compliant Appeal Brief. The holding of abandonment is withdrawn, accordingly.

The petition fee of $1,500.00 will be refunded to deposit account 20-1434, in due course.

Further inquires regarding this decision may be directed to the undersigned at (571) 272-3222.

The application file is being forwarded Technology Center 2800, GAU 2857 for further processing.

Kenya A. McLaughlin
Petitions Attorney
Office of Petitions

UNITED STATES PATENT AND TRADEMARK OFFICE

COMMISSIONER FOR PATENTS
UNITED STATES PATENT AND TRADEMARK OFFICE
WASHINGTON, D.C. 20231
www.uspto.gov

Paper No.

In re Application of Gianpietro Benedetti

Application No. 09/976,209
Filed: October 13, 2001
Attorney Docket No.

: DECISION GRANTING PETITION
: TO REMAIL AN OFFICE
: COMMUNICATION AND RESTART
: PERIOD FOR REPLY

This is a decision on the petition filed on March 14, 2002, requesting that the Office communication mailed on November 19, 2001 be remailed and the shortened statutory period for reply set forth in the Office communication be restarted on the new mail date.

The petition is granted.

Petitioner provided a statement that the Office communication in question was received at the correspondence address of record on March 11, 2002. The petition was filed within two weeks of receipt of the Office communication. A substantial portion of the reply period had elapsed on the date of receipt. Furthermore, the Office communication was mailed between October 13, 2001 and January 2, 2002, when delivery of mail from the Office to certain regions of the country was delayed.

Accordingly, the Office communication in question will be remailed and the period for reply that was originally set forth in the Office communication will be restarted to run from the new mail date of the Office communication.

Kevin Little 4/24/02

Kevin Little
Office of Initial Patent Examination
(703) 308-1863

UNITED STATES PATENT AND TRADEMARK OFFICE

Commissioner for Patents
United States Patent and Trademark Office
P.O. Box 1450
Alexandria, VA 22313-1450
www.uspto.gov

THOMAS SWENSON
LATHROP & GAGE L.C.
SUITE 302
4845 PEARL EAST CIRCLE
BOULDER CO 80301

COPY MAILED

JUL 1 2 2004

OFFICE OF PETITIONS

In re Application of	:	
Victor F. Petrenko	:	
Application No. 09/976,210	:	ON PETITION
Filed: October 11, 2001	:	
Attorney Docket No. 393551	:	

This is a decision on the petition, filed July 8, 2004, under 37 CFR 1.313(c)(2) to withdraw the above-identified application from issue after payment of the issue fee.

The petition is **GRANTED**.

The above-identified application is withdrawn from issue for consideration of a submission under 37 CFR 1.114 (request for continued examination). See 37 CFR 1.313(c)(2).

Petitioner is advised that the issue fee paid on June 16, 2004 in the above-identified application cannot be refunded. If, however, the above-identified application is again allowed, petitioner may request that it be applied towards the issue fee required by the new Notice of Allowance.[1]

The file does not indicate a change of address has been submitted, although the address given on the petition differs from the address of record. If appropriate, a change of address should be filed in accordance with MPEP 601.03. A courtesy copy of this decision is being mailed to the address given on the petition; however, the Office will mail all future correspondence solely to the address of record.

Telephone inquiries should be directed to the undersigned at (703) 305-8859.

---

[1] The request to apply the issue fee to the new Notice may be satisfied by completing and returning the new Issue Fee Transmittal Form PTOL-85(b), which includes the following language thereon: "Commissioner for Patents is requested to apply the Issue Fee and Publication Fee (if any) or re-apply any previously paid issue fee to the application identified above." Petitioner is advised that, whether a fee is indicated as being due or not, the Issue Fee Transmittal Form **must** be completed and timely submitted to avoid abandonment. Note the language in bold text on the first page of the Notice of Allowance and Fee(s) Due (PTOL-85).

The examiner of Technology Center AU 3742 will consider the request for continued examination under 37 CFR 1.114.

Karen Creasy

Karen Creasy
Petitions Examiner
Office of Petitions
Office of the Deputy Commissioner
for Patent Examination Policy
cc:
LATHROP & GAGE L.C.
PETER C. KNOPS
2345 GRAND BOULEVARD
SUITE 2400
KANSAS CITY, MI 64108

UNITED STATES PATENT AND TRADEMARK OFFICE

COMMISSIONER FOR PATENTS
UNITED STATES PATENT AND TRADEMARK OFFICE
P.O. BOX 1450
ALEXANDRIA, VA 22313-1450
www.uspto.gov

ALZA CORPORATION
P O BOX 7210
INTELLECTUAL PROPERTY DEPARTMENT
MOUNTAIN VIEW, CA 94039-7210

COPY MAILED

FEB 0 7 2007

OFFICE OF PETITIONS

In re Application of :
Lothar W. Kleiner, et al. :
Application No. 09/976,228 : ON PETITION
Filed: October 12, 2001 :
Attorney Docket No. ARC 2427 N1 :

This is a decision in response to the petition, filed September 8, 2006, to revive the above-identified application under the provisions of 37 CFR 1.137(b).

There is no indication that the person signing the instant petition was ever given a power of attorney or authorization of agent to prosecute the above-identified application. However, in accordance with 37 CFR 1.34(a), the signature of Edgar R. Cataxinos appearing on the petition shall constitute a representation to the United States Patent and Trademark Office that he is authorized to represent the particular party on whose behalf he acts. A courtesy copy of this decision is being mailed to petitioner. However, if Mr. Cataxinos desires to receive future correspondence regarding this application, the appropriate power of attorney or authorization of agent must be submitted. All future correspondence regarding this application file will be directed solely to the address of record.

The above-identified application became abandoned for failure to reply in a timely manner to the non-final Office action mailed March 2, 2006. On September 8, 2006, the present petition was filed. A Notice of Abandonment was subsequently mailed on September 21, 2006.

The petition satisfies the requirements of 37 CFR 1.137(b) in that petitioner has supplied (1) the reply in the form of an amendment; (2) the petition fee of $1,500; and (3) the required statement of unintentional delay[1].

Accordingly, the petition is **GRANTED**.

The application is being referred to Technology Center AU 1616 for consideration of the amendment filed September 8, 2006.

[1] 37 CFR 1.137(b)(3) requires a statement that the entire delay in filing the required reply from the due date for the reply until the filing of a grantable petition pursuant to 37 CFR 1.137(b) was unintentional. While the statement is not made by an attorney of record, such statement is being treated as having been made as the result of a reasonable inquiry into the facts and circumstances of such delay. See 37 CFR 10.18(b) and Changes to Patent Practice and Procedure; Final Rule Notice, 62 Fed. Reg. 53131, 53178 (October 10, 1997), 1203 Off. Gaz. Pat. Office 63, 103 (October 21, 1997). In the event that such an inquiry has not been made, petitioner must make such an inquiry. If such inquiry results in the discovery that it is not correct that the entire delay in filing the required reply from the due date for the reply until the filing of a grantable petition pursuant to 37 CFR 1.137(b) was unintentional, petitioner must notify the Office.

Telephone inquiries concerning this decision should be directed to the undersigned at (571) 272-3204. Inquiries relating to further prosecution should be directed to the Technology Center.

Sherry D. Brinkley
Petitions Examiner
Office of Petitions

cc: EDGAR R. CATAXINOS
P O BOX 2550
SALT LAKE CITY, UT 84110

UNITED STATES PATENT AND TRADEMARK OFFICE

COMMISSIONER FOR PATENTS
UNITED STATES PATENT AND TRADEMARK OFFICE
P.O. BOX 1450
ALEXANDRIA, VA 22313-1450
www.uspto.gov

COPY MAILED
AUG 25 2006
OFFICE OF PETITIONS

GERALD B ROSENBERG
NEW TECH LAW
260 SHERIDAN AVENUE
SUITE 208
PALO ALTO, CA 94306-2009

In re Application of :
Pham, et al. : DECISION ON PETITION
Application No. 09/976,229 :
Filed: October 12, 2001 :
Docket No.: AESN3001 :

This is a decision on the petition under 37 C.F.R. § 1.137(b), filed February 13, 2006, to revive the above-identified application.

The petition is **GRANTED**.

This application became abandoned August 28, 2005 for failure to timely reply to the non-final Office action mailed May 27, 2005. The non-final Office action set a three (3) month shortened statutory period of time for reply. No extensions of time in accordance with 37 C.F.R. § 1.136 were timely requested. This decision precedes Notice of Abandonment.

A grantable petition pursuant to 37 C.F.R. § 1.137(b) must be accompanied by: (1) the required reply to the outstanding Office action or notice, unless previously filed; (2) the petition fee as set forth in 37 C.F.R. § 1.17(m); (3) a statement that the entire delay in filing the required reply from the due date for the reply until the filing of a grantable petition pursuant to 37 C.F.R. § 1.137(b) was unintentional; and (4) any terminal disclaimer (and fee set forth in 37 C.F.R. § 1.20(d)) required pursuant to 37 C.F.R. § 1.137(c).

The instant petition has been reviewed and found in compliance with the provisions of 37 C.F.R. § 1.137(b). Accordingly, the failure to timely submit a proper reply to the non-final Office action is accepted as having been unintentionally delayed.

The correspondence address indicated in the instant petition differs from that currently of record. If petitioners desire to receive future correspondence regarding this application, the appropriate documentation must be submitted to the Office. **Petitioners are advised that all future correspondence will be directed to the address currently of record until such time as appropriate instructions are received to the contrary.**

This application is being forwarded to Technology Center 2600 for further processing.

Telephone inquiries concerning this matter may be directed to the undersigned at (571) 272-3205.

Alesia M. Brown
Petitions Attorney
Office of Petitions

CC: NEWTECHLAW
285 Hamilton Avenue, Suite 520
Palo Alto, California 94301

UNITED STATES PATENT AND TRADEMARK OFFICE

COMMISSIONER FOR PATENTS
UNITED STATES PATENT AND TRADEMARK OFFICE
P.O. BOX 1450
ALEXANDRIA, VA 22313-1450
www.uspto.gov

Paper No. 6

LAW OFFICE OF LIAUH & ASSOC.
4224 WAIALAE AVE
STE 5-388
HONOLULU HI 96816

COPY MAILED

MAR 2 9 2004

OFFICE OF PETITIONS

In re Application of
Shou Ming-Hwa
Application No. 09/976,231
Filed: October 11, 2001
Attorney Docket Number: HO0114DY

ON PETITION

This is a decision on the petition filed March 15, 2004[1], under 37 CFR 1.137(a)[2] to revive the above-identified application which is first treated as a petition to withdraw the holding of abandonment.

The petition is **DISMISSED**.

The application became abandoned on January 15, 2002, for failure to file a timely response to the Notice to File Corrected Application Papers mailed November 14, 2001, which set a two (2) month statutory period for reply. Accordingly, a Notice of Abandonment was mailed November 6, 2003.

Petitioner asserts that the Notice to File Corrected Application Papers was never received.

PETITION TO WITHDRAW THE HOLDING OF ABANDONMENT

Petitioner asserts that the Notice to File Corrected Application Papers mailed November 14, 2001, was never received. A review of the record indicates no irregularity in the mailing of the Office action, and in the absence of any irregularity in the mailing, there is a strong presumption that the Office action was properly mailed to the address of record. This presumption may be overcome by a showing that the Office action was not in fact received. The showing required to establish the failure to receive an Office action must include a statement from the practitioner stating that the Office communication was not received by the practitioner and attesting to the fact that a search of the file jacket and docket records indicates that the Office communication was not received. A copy of the docket record where the non-received Office communication would have been entered had it been received and docketed must be

---

[1]An amendment was received November 19, 2003 but without a Petition and thus was not treated as a Petition to Revive.

[2]A grantable petition under 37 CFR 1.137(a) must be accompanied by:

(1) the required reply, unless previously filed; In a nonprovisional application abandoned for failure to prosecute, the required reply may be met by the filing of a continuing application. In a nonprovisional utility or plant application filed on or after June 8, 1995, and abandoned for failure to prosecute, the required reply may also be met by the filing of a request for continued examination in compliance with § 1.114. In an application or patent, abandoned or lapsed for failure to pay the issue fee or any portion thereof, the required reply must be the payment of the issue fee or any outstanding balance thereof.

(2) the petition fee as set forth in 37 CFR 1.17(l);

(3) a showing to the satisfaction of the Commissioner that the entire delay in filing the required reply from the due date for the reply until the filing of a grantable petition pursuant to 37 CFR 1.137(a) was unavoidable; and

(4) any terminal disclaimer (and fee as set forth in 37 CFR 1.20(d)) required pursuant to 37 CFR 1.137(c)).

attached to and referenced in practitioner's statement.[3] The showing outlined above may not be sufficient if there are circumstances that point to a conclusion that the Office action may have been lost after receipt rather than a conclusion that the Office action was lost in the mail (e.g. if the practitioner has a history of not receiving Office actions).

The showing of record is insufficient to warrant withdrawal of the holding of abandonment. Petitioners have not presented any evidence that would indicate that the Office communication was not received. What is usually required is a copy of the docket record where the non-received Office communication would have been entered had it been received and docketed. As the required showing has not been presented, the petition must be dismissed.

PETITION UNDER 37 CFR 1.137(a)

The Commissioner may revive an abandoned application if the delay in responding to the relevant outstanding Office requirement is shown to the satisfaction of the Commissioner to be "unavoidable".[4] Decisions on reviving abandoned applications on the basis of "unavoidable" delay have adopted the reasonably prudent person standard in determining if the delay was unavoidable:

> The word 'unavoidable' . . . is applicable to ordinary human affairs, and requires no more or greater care or diligence than is generally used and observed by prudent and careful men in relation to their most important business. It permits them in the exercise of this care to rely upon the ordinary and trustworthy agencies of mail and telegraph, worthy and reliable employees, and such other means and instrumentalities as are usually employed in such important business. If unexpectedly, or through the unforeseen fault or imperfection of these agencies and instrumentalities, there occurs a failure, it may properly be said to be unavoidable, all other conditions of promptness in its rectification being present.[5]

The showing of record is inadequate to establish unavoidable delay within the meaning of 35 U.S.C. § 133 and 37 CFR 1.137(a).[6] Specifically, an application is "unavoidably" abandoned only where petitioner, or counsel for petitioner, takes all action necessary for a proper response to the outstanding Office action, but through the intervention of unforeseen circumstances, such as failure of mail, telegraph, facsimile, or the negligence of otherwise reliable employees, the response is not timely received in the Office.[7]

---

[3] M.P.E.P. § 711.03(c); See Notice entitled "Withdrawing the Holding of Abandonment When Office Actions Are Not Received," 1156 O.G. 53 (November 16, 1993).

[4] 35 U.S.C. § 133.

[5] In re Mattullath, 38 App. D.C. 497, 514-15 (1912)(quoting Ex parte Pratt, 1887 Dec. Comm'r Pat. 31, 32-33 (1887)); see also Winkler v. Ladd, 221 F. Supp. 550, 552, 138 USPQ 666, 167-68 (D.D.C. 1963), aff'd, 143 USPQ 172 (D.C. Cir. 1963); Ex parte Henrich, 1913 Dec. Comm'r Pat. 139, 141 (1913). In addition, decisions on revival are made on a "case-by-case basis, taking all the facts and circumstances into account." Smith v. Mossinghoff, 671 F.2d 533, 538, 213 USPQ 977, 982 (D.C. Cir. 1982). Finally, a petition cannot be granted where a petitioner has failed to meet his or her burden of establishing that the delay was "unavoidable." Haines v. Quigg, 673 F. Supp. 314, 316-17, 5 USPQ2d 1130, 1131-32 (N.D. Ind. 1987).

[6] See MPEP 711(c)(III)(C)(2) for a discussion of the requirements for a showing of unavoidable delay.

[7] Ex parte Pratt, 1887 Dec. Comm'r Pat. 31 (Comm'r Pat. 1887).

As the showing of record, petitioner's bald assertion that the Notice to File Corrected Application Papers was never received, is insufficient to satisfy the requirements of a grantable petition under 37 CFR 1.137(a), the petition will be dismissed.

ALTERNATIVE VENUE

Petitioner may wish to consider filing a renewed petition under 37 CFR 1.137(b), which now provides that where the delay in reply was unintentional, a petition may be filed to revive an abandoned application or a lapsed patent pursuant to 37 CFR 1.137(b). A grantable petition pursuant to 37 CFR 1.137(b) must be accompanied by:

(1) the required reply, unless previously filed. In a nonprovisional application abandoned for failure to prosecute, the required reply may be met by the filing of a continuing application. In a nonprovisional utility or plant application filed on or after 8 June, 1995, and abandoned for failure to prosecute, the required reply may also be met by the filing of a request for continued examination in compliance with § 1.114. In an application or patent, abandoned or lapsed for failure to pay the issue fee or any portion thereof, the required reply must be the payment of the issue fee or any outstanding balance thereof.

(2) the petition fee as set forth in 37 CFR 1.17(m);

(3) a statement that the entire delay in filing the required reply from the due date for the reply until the filing of a grantable petition pursuant to 37 CFR 1.137(b) was unintentional. The Commissioner may required additional information where there is a question whether the delay was unintentional; and

(4) any terminal disclaimer (and fee as set forth in 37 CFR 1.20(d)) required pursuant to 37 CFR 1.137(c)).

The filing of a petition under the unintentional standard cannot be intentionally delayed and therefore should be filed promptly. A person seeking revival due to unintentional delay cannot make a statement that the delay was unintentional unless the entire delay, including the delay from the date it was discovered that the application was abandoned until the filing of the petition to revive under 37 CFR 1.137(b), was unintentional. A statement that the delay was unintentional is not appropriate if petitioner intentionally delayed the filing of a petition for revival under 37 CFR 1.137(b).

Should petitioner decide to file a petition under 37 CFR 1.137(b), the additional petition fee due would be $665.00.

Further correspondence with respect to this matter should be addressed as follows:

By mail: Mail Stop Petition
Commissioner for Patents
P.O. Box 1450
Alexandria, VA 22313-1450

By FAX: (703) 872-9306

Telephone inquiries concerning this matter may be directed to the undersigned Petitions Attorney at (703)305-4497.

Patricia Faison-Ball

Patricia Faison-Ball
Senior Petitions Attorney
Office of Petitions

UNITED STATES PATENT AND TRADEMARK OFFICE

Commissioner for Patents
United States Patent and Trademark Office
P.O. Box 1450
Alexandria, VA 22313-1450
www.uspto.gov

Paper No. 8

LAW OFFICE OF LIAUH & ASSOC.
4224 WAIALAE AVE
STE 5-388
HONOLULU HI 96816

COPY MAILED

MAY 1 1 2004

OFFICE OF PETITIONS

In re Application of
Shou Ming-Hwa
Application No. 09/976,231
Filed: October 11, 2001
Attorney Docket Number: HO0114DY

ON PETITION

This is a decision on the petition filed May 3, 2004, under 37 CFR 1.137(b) to revive the above-identified application.

The petition is **DISMISSED**.

The application became abandoned on January 15, 2002, for failure to file a timely response to the Notice to File Corrected Application Papers mailed November 14, 2001, which set a two (2) month statutory period for reply. Accordingly, a Notice of Abandonment was mailed November 6, 2003. A petition under 37 CFR 1.137(a) was filed May 3, 2004 and dismissed in a decision mailed March 29, 2004.

Comes now petitioner with the instant petition under 37 CFR 1.137(b)[1].

While the petition fee has been submitted the response required by the Notice to File Corrected Application Papers mailed November 14, 2001, has still not been provided. The Notice mailed November 14, 2001 required substitute drawings in compliance with 37 CFR 1.84. Petitioner is still claiming to not have received the Notice but because petitioner has not been able to prove that the Notice was not received, has opted to file the instant petition based on the unintentional delay standard.

A courtesy copy of the Notice to File Corrected Application Papers, previously mailed to the address of record on November 14, 2001 is included with this decision.

Until such time as all the requirements for revival under 37 CFR 1.137(b) have been met, the application will remain in an abandoned status.

---

[1]A grantable petition pursuant to 37 CFR 1.137(b) must be accompanied by:

(1) the required reply, unless previously filed. In a nonprovisional application abandoned for failure to prosecute, the required reply may be met by the filing of a continuing application. In a nonprovisional utility or plant application filed on or after 8 June, 1995, and abandoned for failure to prosecute, the required reply may also be met by the filing of a request for continued examination in compliance with § 1.114. In an application or patent, abandoned or lapsed for failure to pay the issue fee or any portion thereof, the required reply must be the payment of the issue fee or any outstanding balance thereof.

(2) the petition fee as set forth in 37 CFR 1.17(m);

(3) a statement that the entire delay in filing the required reply from the due date for the reply until the filing of a grantable petition pursuant to 37 CFR 1.137(b) was unintentional. The Commissioner may required additional information where there is a question whether the delay was unintentional; and

(4) any terminal disclaimer (and fee as set forth in 37 CFR 1.20(d)) required pursuant to 37 CFR 1.137(c)).

Further correspondence with respect to this matter should be addressed as follows:

By mail: Mail Stop Petition
Commissioner for Patents
P.O. Box 1450
Alexandria, VA 22313-1450

By FAX: (703) 872-9306

Telephone inquiries concerning this matter may be directed to the undersigned Petitions Attorney at (703)305-4497.

Patricia Faison-Ball

Patricia Faison-Ball
Senior Petitions Attorney
Office of Petitions

Attachment: Notice to File Corrected Application Papers mailed November 14, 2001.

UNITED STATES PATENT AND TRADEMARK OFFICE

Commissioner for Patents
United States Patent and Trademark Office
P.O. Box 1450
Alexandria, VA 22313-1450
www.uspto.gov

Paper No. 11

LAW OFFICE OF LIAUH & ASSOC.
4224 WAIALAE AVE
STE 5-388
HONOLULU HI 96816

COPY MAILED

JUN 2 1 2004

OFFICE OF PETITIONS

In re Application of
Shou Ming-Hwa
Application No. 09/976,231
Filed: October 11, 2001
Attorney Docket Number: HO0114DY

ON PETITION

This is a decision on the renewed petition filed June 1, 2004 under 37 CFR 1.137(b) and alternatively under 37 CFR 1.137(a), to revive the above-identified application.

The petition is treated under 37 CFR 1.137(a) and is **GRANTED.**

The petition under 37 CFR 1.137(b) is **DISMISSED** as involving moot issues.

The application became abandoned on January 15, 2002, for failure to file a timely response to the Notice to File Corrected Application Papers mailed November 14, 2001, which set a two (2) month statutory period for reply. Accordingly, a Notice of Abandonment was mailed November 6, 2003.

A petition filed March 15, 2004 under 37 CFR 1.137(a), was dismissed in a decision mailed March 29, 2004. In response thereof, petitioner filed a petition on May 3, 2004, under 37 CFR 1.137(b) which was also dismissed, the decision was mailed May 11, 2004.

The instant petition provides proof that the Notice to File Corrected Application papers was never received and thus, the delay in responding to the Notice in a timely manner was unavoidable versus unintentional. Petitioner is not entitled to a refund of the petition fee paid with the petition filed May 3, 2004 since that petition was in fact treated. However, since the application was filed after June 8, 1995, a terminal disclaimer is not required and the fee in the amount of $55, paid May 3, 2004 will be credited to Deposit Account no. 50-1260. *See 37 CFR 1.137(a).*

The requirements under 37 CFR 1.137(a) having now been satisfied, this application is revived and is being forwarded to the Office of Initial Patent Examination for further processing. In view of the decision under 37 CFR 1.137(a), there is no need to treat the petition alternatively under 37 CFR 1.137(b).

Telephone inquiries concerning this matter may be directed to the undersigned Petitions Attorney at (703)305-4497.

Patricia Faison-Ball

Patricia Faison-Ball
Senior Petitions Attorney
Office of Petitions

UNITED STATES PATENT AND TRADEMARK OFFICE

COMMISSIONER FOR PATENTS
UNITED STATES PATENT AND TRADEMARK OFFICE
P.O. BOX 1450
ALEXANDRIA, VA 22313-1450
www.uspto.gov

Paper No.

Law Offices of Ronald M. Anderson
600 108th Avenue, NE
Suite 507
Bellevue, WA 98004

COPY MAILED
JUN 22 2004
OFFICE OF PETITIONS

In re Application of :
David A. Basiji, et al. :
Application No. 09/976,238 : ON PETITION
Filed: October 12, 2001 :
Attorney Docket No. BIOL0029 :

This is a decision on the petition under 37 CFR 1.137(b), filed April 23, 2004, to revive the above-identified application.

The petition is **GRANTED**.

37 CFR 1.137(b)(3) requires a statement that the entire delay in filing the required reply from the due date for the reply until the filing of a grantable petition pursuant to 37 CFR 1.137(b) was unintentional. Since the statement contained in the instant petition varies slightly from the language required by 37 CFR 1.137(b)(3), the statement is being construed as the statement required by 37 CFR 1.137(b)(3) and petitioner must notify the Office if this is **not** a correct interpretation of the statement contained in the instant petition.

Telephone inquiries concerning this decision should be directed to the undersigned at (703) 306-3475.

The application file is being forwarded to Technology Center 1600 for processing the Request for Continued Examination under 37 CFR 1.114 filed with the instant petition.

Marianne E. Morgan
Petitions Examiner
Office of Petitions
Office of the Deputy Commissioner
for Patent Examination Policy

UNITED STATES PATENT AND TRADEMARK OFFICE

COMMISSIONER FOR PATENTS
UNITED STATES PATENT AND TRADEMARK OFFICE
WASHINGTON, D.C. 20231
www.uspto.gov

Paper No. 5

LERNER DAVID LITTENBERG
KRUMHOLZ & MENTLIK
600 SOUTH AVENUE WEST
WESTFIELD, NJ 07090

COPY MAILED

FEB 27 2002

OFFICE OF PETITIONS

In re Application of
Mark Gottfried
Application No. 09/976,342
Filed: October 12, 2001
Attorney Docket No. EMCORE 3.0-047

NOTICE

This is a notice regarding your request for acceptance of a fee deficiency submission under 37 CFR 1.28. On September 1, 1998, the Court of Appeals for the Federal Circuit held that 37 CFR 1.28(c) is the sole provision governing the time for correction of the erroneous payment of the issue fee as a small entity. **See DH Technology v. Synergystex International, Inc. 154 F.3d 1333, 47 USPQ2d 1865 (Fed. Cir. Sept. 1, 1998).**

The Office no longer investigates or rejects original or reissue applications under 37 CFR 1.56. **1098 Off. Gaz. Pat. Office 502 (January 3, 1989).** Therefore, nothing in this Notice is intended to imply that an investigation was done.

Your fee deficiency submission under 37 CFR 1.28 is hereby **ACCEPTED.**

Inquiries related to this communication should be directed to the Office of Petitions Staff at (703) 305-9285.

This file is being forwarded to Initial Patent Examination Division.

Wan Laymon
Petitions Examiner
Office of Petitions
Office of the Deputy Commissioner
for Patent Examination Policy

UNITED STATES DEPARTMENT OF COMMERCE
Patent and Trademark Office
ASSISTANT SECRETARY AND COMMISSIONER
OF PATENTS AND TRADEMARKS
Washington, D.C. 20231

RECEIVED
FEB 23 1998
PATENT DEPT. TEXAS

COPY MAILED

FEB 18 1998

OFFICE OF PETITIONS
A/C PATENTS

jc996 U.S. PTO
09/976366
10/12/01

The Dow Chemical Company
Patent Department
Building B-1211
Freeport TX 77541

In re Application of
Kazmierski and Jenkins
Application No. 08/785,077
Filed: January 17, 1997
For: Mechanically Frothed and
Chemically Blown Polyurethane Foam

DECISION ACCORDING STATUS
UNDER 37 CFR 1.47(a)

This is in response to the papers filed September 3, 1997, requesting reconsideration of the petition to accept the above-identified application without an oath or declaration from each inventor.

The petition is granted.

Petitioner has provided proof that the non-signing inventor was provided with a copy of the application papers, but that he refused to join in the filing of the application.

The above-identified application and papers have been reviewed and found in compliance with 37 CFR 1.47(a). This application is hereby accorded Rule 1.47(a) status.

As provided in Rule 1.47(a), this Office will forward notice of this application's filing to the non-signing inventor at the address given in the Declaration. Notice of the filing of this application will also be published in the Official Gazette.

Telephone inquiries related to this decision should be directed to the undersigned at (703) 306-3159.

Karin Tyson
Legal Advisor
Special Program Law Office
Office of the Deputy Assistant Commissioner
for Patent Policy and Projects

UNITED STATES PATENT AND TRADEMARK OFFICE

COMMISSIONER FOR PATENTS
UNITED STATES PATENT AND TRADEMARK OFFICE
WASHINGTON, D.C. 20231
www.uspto.gov

Paper No. 5

COPY MAILED

SEP 30 2002

OFFICE OF PETITIONS

THE DOW CHEMICAL COMPANY
INTELLECTUAL PROPERTY SECTION
P. O. BOX 1967
MIDLAND MI 48641-1967

In re Application of
Kazmierski & Jenkines
Application No. 09/976,366
Filed: October 12, 2001
Attorney Docket No. 42741D
For: MECHANICALLY FROTHED AND CHEMICALLY BLOWN POLYURETHANE FOAM

:DECISION ON PETITIONS

This is a decision on (1) the petition under 37 CFR 1.47(a), filed October 12, 2001 and (2) the petition entitled, "RESPONSE TO NOTICE TO FILE MISSING PARTS," filed January 23, 2002 (certificate of mailing date December 21, 2001). The petition filed on January 23, 2002 will be treated as a petition under 37 CFR 1.181 to withdraw the Notice to File Missing Parts of Nonprovisional Application, mailed October 24, 2001.

The petition under 37 CFR 1.47(a) is **GRANTED**.

The petition under 37 CFR 1.181 is **GRANTED**.

The Office contended that the above-identified application was filed on October 12, 2001 without an executed oath or declaration. Accordingly, on October 24, 2001, a "Notice to File Missing Parts of Nonprovisional Application" (Notice) was mailed, requiring an executed oath or declaration , and a surcharge for its late filing.

In response, petitioner filed the "RESPONSE TO NOTICE TO FILE MISSING PARTS," on January 23, 2002 (certificate of mailing date December 21, 2001).

Petitioner alleges that on October 12, 2001, petitioner filed (1) a copy of an executed declaration filed in Application No. 08/785,077, of which the instant filing is a divisional application, and (2) a copy of the decision, mailed on February 18, 1998, granting a petition to accord § 1.47 status to the prior application. A review of the application file reveals these two documents are present and contain an Office generated barcode affixed thereto that states the papers were filed on October 12, 2001. Therefore, the October 24, 2001 Notice was mailed in error and is hereby vacated.

The above-identified application and papers, filed October 12, 2001, have been reviewed and found in compliance with 37 CFR 1.47(a). This application is hereby accorded Rule 1.47(a) ·tus. No fee has been or will be charged.

·ice will not forward notice of this application's filing to the non-signing inventor because ·rding the filing of the prior application has already been sent to the non-signing

After this decision is mailed, the application will be forwarded to the Office of Initial Patent Examination for further processing.

Telephone inquiries related to this decision should be directed to the undersigned at 703-308-67212.

E. Shirene Willis
Senior Petitions Attorney
Office of Petitions
Office of the Deputy Commissioner
for Patent Examination Policy

JAN 2 3 2002
JC37
PATENT & TRADEMARK OFFICE

UNITED STATES DEPARTMENT OF COMMERCE
Patent and Trademark Office
ASSISTANT SECRETARY AND COMMISSIONER
OF PATENTS AND TRADEMARKS
Washington, D.C. 20231

COPY MAILED
JUL 8 1997
OFFICE OF PETITIONS
A/C PATENTS

The Dow Chemical Company
Patent Department
Building B-1211
Freeport TX 77541

JUL 14 1997

In re Application of
Kazmierski and Jenkins
Application No. 08/785,077
Filed: January 17, 1997
For: Mechanically Frothed and
Chemically Blown Polyurethane Foam

DECISION REFUSING STATUS
UNDER 37 CFR 1.47(a)

This is a decision on the petition under 37 CFR 1.47(a), filed April 25, 1997, to accept the above-identified application without an oath or declaration from each inventor.

The petition is dismissed.

Any request for reconsideration of this decision must be submitted within TWO (2) MONTHS from the mail date of this decision. Extensions of time under 37 CFR 1.136(a) are permitted. The reconsideration request should include a cover letter entitled "Request for Reconsideration of Petition under 37 CFR 1.47(a)" and may include an oath or declaration signed by the previously non-signing inventor.

A grantable petition under 37 CFR 1.47(a) requires: (1) proof that the non-signing inventor refuses to sign the oath or declaration after having been presented with the application papers or proof that the non-signing inventor cannot be reached; (2) an acceptable oath or declaration; (3) the petition fee; and (4) a statement of the last known address of the non-signing inventor(s). This petition lacks item (1) above.

This application was filed on January 17, 1997 naming Kazmierski and Jenkins as joint inventors but without an executed oath or Declaration.

On March 24, 1997, a "Notice to File Missing Parts" was mailed which required an executed oath or declaration and a surcharge for its late submission.

In response, on April 25, 1997, a declaration executed by joint inventor Jenkines in compliance with 37 CFR 1.63 and a petition under 37 CFR 1.47 were filed. The petition was accompanied by

RECEIVED
JAN 2 5 2002
OFFICE OF PETITIONS
DEPUTY A/C PATENTS

the requisite surcharge and petition fee and sets forth the last known address of the non-signing inventor. Declarations of Carl Poteet and Gene L. Tyler were provided in support of the petition. Mr. Tyler states that Mr. Kazmierski was presented with the declaration, but that he has refused to sign the document.

Mr. Kazmierski cannot sign the declaration for patent application without having reviewed and understood the application that was filed on January 17, 1997. Accordingly, applicant must establish that Mr. Kazmierski was presented with a copy of the application papers before his refusal to sign the declaration can be accepted as evidence that he refused to join the application. See Manual of Patent Examining Procedure, Section 409.03(d). Note especially that the evidence must be submitted by someone with first-hand knowledge of the events.

Further correspondence with respect to this matter should be addressed as follows:

By mail: Assistant Commissioner for Patents
Box DAC
Washington, D.C. 20231

By FAX: (703) 308-6916
Attn: Special Program Law Office

By hand: One Crystal Park, Suite 520
2011 Crystal Drive
Arlington, VA

Telephone inquiries related to this decision should be directed to the undersigned at (703) 306-3159.

Karin Tyson
Legal Advisor
Special Program Law Office
Office of the Deputy Assistant Commissioner
for Patent Policy and Projects

RECEIVED
25 2002
OFFICE OF PETITIONS
DEPUTY A/C PATENTS

JAN 2 3 2002
JC37

UNITED STATES DEPARTMENT OF COMMERCE
Patent and Trademark Office
ASSISTANT SECRETARY AND COMMISSIONER
OF PATENTS AND TRADEMARKS
Washington, D.C. 20231

RECEIVED
FEB 2 3 1998
PATENT DEPT. TEXAS

COPY MAILED

FEB 1 8 1998

OFFICE OF PETITIONS
A/C PATENTS

The Dow Chemical Company
Patent Department
Building B-1211
Freeport TX 77541

In re Application of
Kazmierski and Jenkins
Application No. 08/785,077
Filed: January 17, 1997
For: Mechanically Frothed and
Chemically Blown Polyurethane Foam

DECISION ACCORDING STATUS
UNDER 37 CFR 1.47(a)

This is in response to the papers filed September 3, 1997, requesting reconsideration of the petition to accept the above-identified application without an oath or declaration from each inventor.

The petition is granted.

Petitioner has provided proof that the non-signing inventor was provided with a copy of the application papers, but that he refused to join in the filing of the application.

The above-identified application and papers have been reviewed and found in compliance with 37 CFR 1.47(a). This application is hereby accorded Rule 1.47(a) status.

As provided in Rule 1.47(a), this Office will forward notice of this application's filing to the non-signing inventor at the address given in the Declaration. Notice of the filing of this application will also be published in the Official Gazette.

Telephone inquiries related to this decision should be directed to the undersigned at (703) 306-3159.

Karin Tyson
Legal Advisor
Special Program Law Office
Office of the Deputy Assistant Commissioner
for Patent Policy and Projects

RECEIVED
JAN 2 5 2002
OFFICE OF PETITIONS
DEPUTY A/C PATENTS

JAN 2 3 2002
JC39

UNITED STATES DEPARTMENT OF COMMERCE
Patent and Trademark Office
ASSISTANT SECRETARY AND COMMISSIONER
OF PATENTS AND TRADEMARKS
Washington, D.C. 20231

Daniel W. Kazmierski
766 Tibbs Bridge Road
Chatsworth GA 30705

COPY MAILED

FEB 1 8 1998

OFFICE OF PETITIONS
A/C PATENTS

In re Application of
Kazmierski and Jenkins
Application No. 08/785,077
Filed: January 17, 1997
For: Mechanically Frothed and Chemically Blown Polyurethane Foam

Dear Mr. Kazmierski:

You are named as a joint inventor in the above identified United States patent application, filed under the provisions of 35 U.S.C. 116 (United States Code), and 37 CFR 1.47(a), Rules of Practice in Patent Cases. Should a patent be granted on the application you will be designated therein as a joint inventor.

As a named inventor you are entitled to inspect any paper in the file wrapper of the application, order copies of all or any part thereof (at a prepaid cost per 37 CFR 1.19) or make your position of record in the application. Alternatively, you may arrange to do any of the preceding through a registered patent attorney or agent presenting written authorization from you. If you care to join the application, counsel of record (see below) would presumably assist you. Joining in the application would entail the filing of an appropriate oath or declaration by you pursuant to 37 CFR 1.63.

Telephone inquiries regarding this communication should be directed to the undersigned at (703)305-9285.

Karin Tyson
Legal Advisor
Special Program Law Office
Office of the Deputy Assistant Commissioner
for Patent Policy and Projects

The Dow Chemical Company
Patent Department
Building B-1211
Freeport TX 77541

RECEIVED
2 5 2002
OFFICE OF PETITIONS
DEPUTY A/C PATENTS

08/785,077

IN THE UNITED STATES PATENT AND TRADEMARK OFFICE

Applicant(s): Daniel W. Kazmierski & Randall C. Jenkines

Serial No.: 08/785,077

Filed: January 17, 1997

For: MECHANICALLY FROTHED AND CHEMICALLY BLOWN POLYURETHANE FOAM

JAN 2 3 2002
JC31
PATENT & TRADEMARK OFFICE

I HEREBY CERTIFY THAT THIS CORRESPONDENCE IS BEING DEPOSITED WITH THE UNITED STATES POSTAL SERVICE AS FIRST CLASS MAIL WITH SUFFICIENT POSTAGE IN AN ENVELOPE ADDRESSED TO: ASSISTANT COMMISSIONER FOR PATENTS, WASHINGTON, DC 20231, ON:

August 28, 1997

DATE OF DEPOSIT

Nancy F. Hobbs

PRINT OR TYPE NAME OF PERSON SIGNING CERTIFICATE

SIGNATURE OF PERSON SIGNING CERTIFICATE

August 28, 1997

DATE OF SIGNATURE

Assistant Commissioner for Patents
Box DAC
Washington, D.C. 20231

Sir:

REQUEST FOR RECONSIDERATION OF PETITION UNDER 37 C.F.R. §1.47(a); INVENTOR UNAVAILABLE OR REFUSES TO EXECUTE APPLICATION

This is a request for reconsideration of the decision to dismiss of the petition under 37 CFR 1.47(a), filed April 25, 1997. The petition was filed to request that the application be accepted without an oath or declaration from one of the named inventors. The statements submitted by Carl Poteet and Gene Tyler in the original petition were not deemed sufficient to establish

RECEIVED
JAN 25 2002
OFFICE OF PETITIONS
DEPUTY A/C PATENTS

42741A

that Mr. Kazmierski was presented with a copy of the application papers, which he did not sign.

In order to establish that Mr. Kazmierski was presented with a copy of the application papers, the declaration of Randall C. Jenkines is attached herewith. Mr. Jenkines statement should establish the facts sufficiently to show that Mr. Kazmierski was presented with the papers but refused to sign.

In order to preserve your petitioner's rights, the granting of this petition is necessary and is in order. Favorable action and granting of this petition is respectfully requested.

Respectfully submitted,
THE DOW CHEMICAL COMPANY

Kevin S. Dobson
Registration No. 40,296
Phone: 409-238-9041

2301 Brazosport Blvd.
Freeport, TX 77541

KSD/nfh

PTO/SB/66 (03-09)
Approved for use through 03/31/2012. OMB 0651-0016
U.S. Patent and Trademark Office: U.S. DEPARTMENT OF COMMERCE
Under the Paperwork Reduction Act of 1995, no persons are required to respond to a collection of information unless it displays valid OMB control number.

PETITION TO ACCEPT UNINTENTIONALLY DELAYED PAYMENT OF MAINTENANCE FEE IN AN EXPIRED PATENT (37 CFR 1.378(c))

Patent Number	Issue Date (YYYY-MM-DD)	Application Number	Filing Date (YYYY-MM-DD)	Docket Number (if applicable)
6712118	2004-03-30	09/976,379	2001-10-11	

CAUTION: Maintenance fee (and surcharge, if any) payment must correctly identify: (1) the patent number and (2) the application number of the actual U.S. application leading to issuance of that patent to ensure the fee(s) is/are associated with the correct patent. 37 CFR 1.366(c) and (d).

SMALL ENTITY
☒ Patentee claims, or has previously claimed, small entity status. See 37 CFR 1.27.

LOSS OF ENTITLEMENT TO SMALL ENTITY STATUS
☐ Patentee is no longer entitled to small entity status. See 37 CFR 1.27(g)

NOT Small Entity		Small Entity	
Fee	Code	Fee	Code
○ 3 ½ year	(1551)	◉ 3 ½ year	(2551)
○ 7 ½ year	(1552)	○ 7 ½ year	(2552)
○ 11 ½ year	(1553)	○ 11 ½ year	(2553)

SURCHARGE
The surcharge required by 37 CFR 1.20(i)(2) (Fee Code 1558) must be paid as a condition of accepting unintentionally delayed payment of the maintenance fee.

MAINTENANCE FEE (37 CFR 1.20(e)-(g))
The appropriate maintenance fee must be submitted with this petition.

STATEMENT
THE UNDERSIGNED CERTIFIES THAT THE DELAY IN PAYMENT OF THE MAINTENANCE FEE TO THIS PATENT WAS UNINTENTIONAL

PETITIONER(S) REQUEST THAT THE DELAYED PAYMENT OF THE MAINTENANCE FEE BE ACCEPTED AND THE PATENT REINSTATED

THIS PORTION MUST BE COMPLETED BY THE SIGNATORY OR SIGNATORIES

37 CFR 1.378(d) states: "Any petition under this section must be signed by an attorney or agent registered to practice before the Patent and Trademark Office, or by the patentee, the assignee, or other party in interest."

I certify, in accordance with 37 CFR 1.4(d)(4) that I am

○ An attorney or agent registered to practice before the Patent and Trademark Office

◉ A sole patentee

○ A joint patentee; I certify that I am authorized to sign this submission on behalf of all the other patentees.

○ A joint patentee; all of whom are signing this e-petition

○ The assignee of record of the entire interest

Sole Patentee			
A signature of the applicant or representative is required in accordance with 37 CFR 1.33 and 10.18. Please see 37 CFR 1.4(d) for the form of the signature.			
Signature	/Jeffrey/Nussdorf/	Date (YYYY-MM-DD)	2010-03-26
Name	Jeffrey Nusssdorf		

This collection of information is required by 37 CFR 1.378(c). The information is required to obtain or retain a benefit by the public which is to file (and by the USPTO to process) an application. Confidentiality is governed by 35 U.S.C. 122 and 37 CFR 1.11 and 1.14. This collection is estimated to take 1 hour to complete, including gathering, preparing, and submitting the completed application form to the USPTO. Time will vary depending upon the individual case. Any comments on the amount of time you require to complete this form and/or suggestions for reducing this burden, should be sent to the Chief Information Officer, U.S. Patent and Trademark Office, U.S. Department of Commerce, P.O. Box 1450, Alexandria, VA 22313-1450. DO NOT SEND FEES OR COMPLETED FORMS TO THIS ADDRESS. **This form can only be used when in conjunction with EFS-Web. If this form is mailed to the USPTO, it may cause delays in reinstating the patent.**

Privacy Act Statement

The Privacy Act of 1974 (P.L. 93-579) requires that you be given certain information in connection with your submission of the attached form related to a patent application or patent. Accordingly, pursuant to the requirements of the Act, please be advised that: (1) the general authority for the collection of this information is 35 U.S.C. 2(b)(2); (2) furnishing of the information solicited is voluntary; and (3) the principal purpose for which the information is used by the U.S. Patent and Trademark Office is to process and/or examine your submission related to a patent application or patent. If you do not furnish the requested information, the U.S. Patent and Trademark Office may not be able to process and/or examine your submission, which may result in termination of proceedings or abandonment of the application or expiration of the patent.

The information provided by you in this form will be subject to the following routine uses:

1. The information on this form will be treated confidentially to the extent allowed under the Freedom of Information Act (5 U.S.C. 552) and the Privacy Act (5 U.S.C. 552a). Records from this system of records may be disclosed to the Department of Justice to determine whether the Freedom of Information Act requires disclosure of these records.

2. A record from this system of records may be disclosed, as a routine use, in the course of presenting evidence to a court, magistrate, or administrative tribunal, including disclosures to opposing counsel in the course of settlement negotiations.

3. A record in this system of records may be disclosed, as a routine use, to a Member of Congress submitting a request involving an individual, to whom the record pertains, when the individual has requested assistance from the Member with respect to the subject matter of the record.

4. A record in this system of records may be disclosed, as a routine use, to a contractor of the Agency having need for the information in order to perform a contract. Recipients of information shall be required to comply with the requirements of the Privacy Act of 1974, as amended, pursuant to 5 U.S.C. 552a(m).

5. A record related to an International Application filed under the Patent Cooperation Treaty in this system of records may be disclosed, as a routine use, to the International Bureau of the World Intellectual Property Organization, pursuant to the Patent Cooperation Treaty.

6. A record in this system of records may be disclosed, as a routine use, to another federal agency for purposes of National Security review (35 U.S.C. 181) and for review pursuant to the Atomic Energy Act (42 U.S.C. 218(c)).

7. A record from this system of records may be disclosed, as a routine use, to the Administrator, General Services, or his/her designee, during an inspection of records conducted by GSA as part of that agency's responsibility to recommend improvements in records management practices and programs, under authority of 44 U.S.C. 2904 and 2906. Such disclosure shall be made in accordance with the GSA regulations governing inspection of records for this purpose, and any other relevant (i.e., GSA or Commerce) directive. Such disclosure shall not be used to make determinations about individuals.

8. A record from this system of records may be disclosed, as a routine use, to the public after either publication of the application pursuant to 35 U.S.C. 122(b) or issuance of a patent pursuant to 35 U.S.C. 151. Further, a record may be disclosed, subject to the limitations of 37 CFR 1.14, as a routine use, to the public if the record was filed in an application which became abandoned or in which the proceedings were terminated and which application is referenced by either a published application, an application open to public inspections or an issued patent.

9. A record from this system of records may be disclosed, as a routine use, to a Federal, State, or local law enforcement agency, if the USPTO becomes aware of a violation or potential violation of law or regulation.

UNITED STATES PATENT AND TRADEMARK OFFICE

Commissioner for Patents
United States Patent and Trademark Office
P.O. Box 1450
Alexandria, VA 22313-1450
www.uspto.gov

In re Patent No. 6712118
Issue Date: March 30,2004
Application No. 09976379
Filed: October 11,2001
Attorney Docket No.

:
:DECISION GRANTING PETITION
:UNDER 37 CFR 1.378(c)
:

This is a decision on the electronic petition, filed March 26,2010 ,under 37 CFR 1.378(c) to accept the unintentionally delayed payment of the 3.5 year maintenance fee for the above-identified patent.

The petition is **GRANTED**.

The maintenance fee is accepted, and the above-identified patent reinstated as of March 26,2010 .
This decision also constitutes notice that the fee has been accepted. An electronic copy of the petition and this decision has been created as an entry in the Image File Wrapper. Nevertheless, petitioner should print and retain an independent copy.

Telephone inquiries related to this electronic decision should be directed to the Electronic Business Center at 1-866-217-9197.

UNITED STATES PATENT AND TRADEMARK OFFICE

Commissioner for Patents
United States Patent and Trademark Office
P.O. Box 1450
Alexandria, VA 22313-1450
www.uspto.gov

CSA LLP
4807 SPICEWOOD SPRINGS RD.
BLDG. 4, SUITE 201
AUSTIN TX 78759

COPY MAILED

JAN 12 2007

OFFICE OF PETITIONS

In re Application of
David L. Rabbers et al.
Application No. 09/976,400
Filed: October 11, 2001
Attorney Docket No. OIC0263US

DECISION GRANTING PETITION

This is a decision on the petition, filed February 21, 2006 , which is being treated as a petition under 37 CFR 1.137(b) to revive the instant nonprovisional application for failure to timely notify the U.S. Patent and Trademark (USPTO) of the filing of an application in a foreign country, or under a multinational treaty that requires publication of applications eighteen months after filing. *See* 37 CFR 1.137(f).

The petition is **GRANTED**.

Petitioner states that the present nonprovisional application is the subject of a foreign or international application filed on February 25, 2003. However, the U.S. Patent and Trademark Office was unintentionally not notified of this filing within 45 days subsequent to the filing of the subject application in a foreign country.

In view of the above, this application became abandoned pursuant to 35 U.S.C. § 122(b)(2)(B)(iii) and 37 CFR 1.213(c) for failure to timely notify the Office of the filing of an application in a foreign country, or under a multilateral international agreement, that requires publication of applications 18 months after filing.

A petition under 37 CFR 1.137(f) must be accompanied by:

(1) the reply which is met by the notification of such filing in a foreign country or under a multinational treaty;

(2) the petition fee as set forth in 37 CFR 1.17(m); and

(3) a statement that the entire delay in filing the required reply from the due date of the reply until the filing of a grantable petition was unintentional.

The present petition has been found to be in compliance with 37 CFR 1.137(f). Accordingly, the failure to timely notify the Office of a foreign or international filing within 45 days after the date of filing of such foreign or international application as provided by 35 U.S.C. § 122(b)(2)(B)(I) has been rescinded. The projected publication date is April 19, 2007 and a copy of the communication regarding rescission is included herein.

The petition fee in the amount of $1500.00 has been applied to the finance records for this application.

This matter is being referred to Technology Center 2154 for further examination in due course.

Telephone inquiries related to this decision should be directed to the undersigned Petitions Attorney at (571) 272-3212.

Patricia Faison-Ball

Patricia Faison-Ball
Senior Petitions Attorney
Office of Petitions

ATTACHMENT: Communication Regarding Rescission of Nonpublication Request And/or Notice of Foreign Filing

UNITED STATES PATENT AND TRADEMARK OFFICE

UNITED STATES DEPARTMENT OF COMMERCE
United States Patent and Trademark Office
Address: COMMISSIONER FOR PATENTS
P.O. Box 1450
Alexandria, Virginia 22313-1450
www.uspto.gov

APPLICATION NUMBER	FILING/RECEIPT DATE	FIRST NAMED APPLICANT	ATTY. DOCKET NO.
09/976,400	10/11/2001	David L. Rabbers	OIC0263US

CONFIRMATION NO. 2799

60975
CSA LLP
4807 SPICEWOOD SPRINGS RD.
BLDG. 4, SUITE 201
AUSTIN, TX 78759

Date Mailed: 01/12/2007

Communication Regarding Rescission Of Nonpublication Request and/or Notice of Foreign Filing

Applicant's rescission of the previously-filed nonpublication request and/or notice of foreign filing is acknowledged. The paper has been reflected in the Patent and Trademark Office's (USPTO's) computer records so that the earliest possible projected publication date can be assigned.

The projected publication date is 04/19/2007.

If applicant rescinded the nonpublication request before or on the date of "foreign filing,"[1] then no notice of foreign filing is required.

If applicant foreign filed the application after filing the above application and before filing the rescission, and the rescission did not also include a notice of foreign filing, then a notice of foreign filing (not merely a rescission) is required to be filed within 45 days of the date of foreign filing. See 35 U.S.C. § 122(b)(2)(B)(iii), and Clarification of the United States Patent and Trademark Office's Interpretation of the Provisions of 35 U.S.C. § 122(b)(2)(B)(ii)-(iv), 1272 Off. Gaz. Pat. Office 22 (July 1, 2003).

If a notice of foreign filing is required and is not filed within 45 days of the date of foreign filing, then the application becomes abandoned pursuant to 35 U.S.C. § 122(b)(2)(B)(iii). In this situation, applicant should either file a petition to revive or notify the Office that the application is abandoned. See 37 CFR 1.137(f). Any such petition to revive will be forwarded to the Office of Petitions for a decision. Note that the filing of the petition will not operate to stay any period of reply that may be running against the application.

Questions regarding petitions to revive should be directed to the Office of Petitions at (571) 272-3282. Questions regarding publications of patent applications should be directed to the patent application publication hotline at (703) 605-4283 or by e-mail pgpub@uspto.gov.

[1] Note, for purpose of this notice, that "foreign filing" means "filing an application directed to the same invention in another country, or under a multilateral international agreement, that requires publication of applications 18 months after filing".

UNITED STATES PATENT AND TRADEMARK OFFICE

Commissioner for Patents
United States Patent and Trademark Office
P.O. Box 1450
Alexandria, VA 22313-1450
www.uspto.gov

Paper No.

FOLEY & LARDNER LLP
777 EAST WISCONSIN AVENUE
MILWAUKEE WI 53202-5306

COPY MAILED
SEP 15 2008

In re Application of	:	
Heroux et al.	:	
pplication No. 09/976,437	:	LETTER REGARDING
Filed: October 15, 2001	:	PATENT TERM ADJUSTMENT
Atty Docket No. 090900-0156	:	

This letter is in response to the "COMMUNICATION REGARDING PATENT TERM ADJUSTMENT," filed March 14, 2008. Applicants request that the initial determination of patent term adjustment under 35 USC 154(b) be recalculated. The request is treated as a request pursuant to applicant's duty of good faith and candor to the Office.

The request for review of patent term adjustment is **GRANTED**.

The Office has updated the PAIR screen to reflect that the correct Patent Term Adjustment (PTA) at the time of the mailing of the Notice of Allowance is 60 days. A copy of the updated PAIR screen, showing the correct determination, is enclosed.

On January 18, 2008, the Office mailed the Determination of Patent Term Adjustment under 35 USC 154(b) in the above-identified application. The Notice stated that the patent term adjustment to date is one hundred twenty (120) days. The instant request for review of patent term adjustment was timely filed.[1]

The Office initially determined a patent term adjustment of one hundred twenty (120) days based on an adjustment for PTO delay

[1] PALM Records indicate that the issue fee was paid on March 14, 2008.

The Office initially determined a patent term adjustment of nine hundred sixty-nine (969) days based on an adjustment for PTO delay of one thousand one hundred thirteen (1113) days, pursuant to 35 USC 154(b) and 37 CFR 1.703(a)(1). This was reduced by the following periods of applicant delay pursuant to 37 CFR 1.704(b): by three (3) days, for the filing of an amendment in response to a non-final Office action on December 30, 2005, three (3) months and three (3) days after the mailing of the non-final Office action on September 27, 2005; by four (4) days, for the filing of an amendment in response to a non-final Office action on October 10, 2006, three (3) months and four (4) days after the mailing of the non-final Office action on July 6, 2006; by 85 days, for the filing of a request for continued examination (RCE) on June 11, 2007, three (3) months and 85 days after the mailing of a final Office action on December 18, 2006; by 34 days, for the filing of a response to the non-final Office action on November 1, 2007, three (3) months and 34 days after the mailing of the non-final Office action on June 28, 2007, and by 18 days, for the filing of a supplemental amendment on November 19, 2007, or 18 days after the filing of an amendment on November 1, 2007.

Applicants are correct. The RCE was filed on June 18, 2007, not June 11, 2007. 37 CFR 1.704(b) states, in pertinent part that:

> An applicant shall be deemed to have failed to engage in reasonable efforts to conclude processing or examination of an application for the cumulative total of any periods of time in excess of three months that are taken to reply to any notice or action by the Office making any rejection, objection, argument, or other request, measuring such three-month period from the date the notice or action was mailed or given to the applicant, in which case the period of adjustment set forth in § 1.703 shall be reduced by the number of days, if any, beginning on the day after the date that is three months after the date of mailing or transmission of the Office communication notifying the applicant of the rejection, objection, argument, or other request and ending on the date the reply was filed.

Accordingly, ninety-two (92) days of applicant delay should have been assessed, rather than 85 days, for filing of an RCE on June

18, 2007, or three months and 92 days after the mailing of the final Office action mailed December 18, 2006.

Further, a review of the record reveals that applicants should have been assessed four (4) days of reduction in patent term adjustment for the filing of an RCE on June 19, 2006, or three months and 4 days after the mailing of the final Office action mailed on March 15, 2006.

In view thereof, the correct determination of PTA at the time of the mailing of the Notice of Allowance is nine hundred fifty-eight (958) days (1113 days of PTO delay, reduced by 155 (3+4+4+92+34+18) days of Applicant delay).

As this letter was submitted as an advisement to the Office of an error in applicants' favor, the Office will not assess the $200.00 fee under 37 CFR 1.18(e). The Office thanks applicants for their good faith and candor in bringing this to the attention of the Office.

The Office of Data Management has been advised of this decision. The application is thereby forwarded to the Office of Data Management for issuance of the patent. The patent term adjustment indicated on the patent (as shown on the Issue Notification mailed about three weeks prior to patent issuance) will include any additional adjustment accrued both for Office delay in issuing the patent more than four months after payment of the issue fee and satisfaction of all outstanding requirements, and if applicable, for the Office taking in excess of three years to issue the patent (to the extent that the three-year period does not overlap with periods already accorded).

Telephone inquiries specific to this matter should be directed to Douglas I. Wood, Senior Petitions Attorney, at (571) 272-3231.

Nancy Johnson
Senior Petitions Attorney
Office of Petitions

Enclosure: Revised PALM Calculation

PALM INTRANET

Day : Monday
Date: 9/8/2008
Time: 19:21:15

PTA Calculations for Application: 09/750668			
Application Filing Date:	12/29/2000	PTO Delay (PTO):	1113
Issue Date of Patent:		Three Years:	0
Pre-Issue Petitions:	0	Applicant Delay (APPL):	144
Post-Issue Petitions:	0	Total PTA (days):	958
PTO Delay Adjustment:	-11		

File Contents History

Number	Date	Contents Description	PTO	APPL	START
90	09/08/2008	ADJUSTMENT OF PTA CALCULATION BY PTO		4	
89	09/08/2008	ADJUSTMENT OF PTA CALCULATION BY PTO		92	
88	09/08/2008	ADJUSTMENT OF PTA CALCULATION BY PTO	85		
75	02/01/2008	MAIL NOTICE OF ALLOWANCE			
74	01/31/2008	ISSUE REVISION COMPLETED			
73	01/31/2008	DOCUMENT VERIFICATION			
72	01/30/2008	NOTICE OF ALLOWANCE DATA VERIFICATION COMPLETED			
71	01/30/2008	NOTICE OF ALLOWABILITY			
70	11/25/2007	DATE FORWARDED TO EXAMINER			
69	11/19/2007	SUPPLEMENTAL RESPONSE		18	66
68	10/31/2007	MISCELLANEOUS INCOMING LETTER			
67	11/16/2007	DATE FORWARDED TO EXAMINER			
66	11/01/2007	RESPONSE AFTER NON-FINAL ACTION		34	63
65	11/01/2007	REQUEST FOR EXTENSION OF TIME - GRANTED			
64	10/31/2007	WORKFLOW - REQUEST FOR RCE - BEGIN			
63	06/28/2007	MAIL NON-FINAL REJECTION			
62	06/22/2007	NON-FINAL REJECTION			
61	06/21/2007	DATE FORWARDED TO EXAMINER			
60	06/11/2007	AMENDMENT SUBMITTED/ENTERED WITH FILING OF CPA/RCE			
59	06/21/2007	DATE FORWARDED TO EXAMINER			
58	06/11/2007	REQUEST FOR CONTINUED EXAMINATION (RCE)		85	51
57	06/21/2007	DISPOSAL FOR A RCE/CPA/129 (EXPRESS ABANDONMENT IF CPA)			
56	06/10/2007	REQUEST FOR EXTENSION OF TIME - GRANTED			

55	03/06/2007	MAIL ADVISORY ACTION (PTOL - 303)			
54	03/05/2007	ADVISORY ACTION (PTOL-303)			
53	03/02/2007	DATE FORWARDED TO EXAMINER			
52	02/23/2007	AMENDMENT AFTER FINAL REJECTION			
51	12/18/2006	MAIL FINAL REJECTION (PTOL - 326)			
50	12/15/2006	FINAL REJECTION			
49	10/18/2006	DATE FORWARDED TO EXAMINER			
48	10/10/2006	RESPONSE AFTER NON-FINAL ACTION		4	47
47	07/06/2006	MAIL NON-FINAL REJECTION			
46	06/30/2006	NON-FINAL REJECTION			
45	06/28/2006	DATE FORWARDED TO EXAMINER			
44	06/19/2006	AMENDMENT SUBMITTED/ENTERED WITH FILING OF CPA/RCE			
43	06/28/2006	DATE FORWARDED TO EXAMINER			
42	06/19/2006	REQUEST FOR CONTINUED EXAMINATION (RCE)			
41	06/28/2006	DISPOSAL FOR A RCE/CPA/129 (EXPRESS ABANDONMENT IF CPA)			
40	06/19/2006	WORKFLOW - REQUEST FOR RCE - BEGIN			
39	03/21/2006	CASE DOCKETED TO EXAMINER IN GAU			
38	03/15/2006	MAIL FINAL REJECTION (PTOL - 326)			
37	03/14/2006	FINAL REJECTION			
36	01/13/2004	INFORMATION DISCLOSURE STATEMENT CONSIDERED			
35	09/29/2003	INFORMATION DISCLOSURE STATEMENT CONSIDERED			
34	07/05/2001	INFORMATION DISCLOSURE STATEMENT CONSIDERED			
33	01/12/2006	DATE FORWARDED TO EXAMINER			
32	12/30/2005	RESPONSE AFTER NON-FINAL ACTION		3	30
31	10/12/2005	CASE DOCKETED TO EXAMINER IN GAU			
30	09/27/2005	MAIL NON-FINAL REJECTION			
29	09/27/2005	NON-FINAL REJECTION			
28	09/20/2005	DATE FORWARDED TO EXAMINER			
27	09/14/2005	RESPONSE TO ELECTION / RESTRICTION FILED			
26	08/10/2005	MAIL SUPPLEMENTAL RESTRICTION / ELECTION REQUIREMENT			
25	08/10/2005	MAIL EXAMINER INTERVIEW SUMMARY (PTOL			

		- 413)			
24	08/05/2005	EXAMINER INTERVIEW SUMMARY RECORD (PTOL - 413)			
23	08/08/2005	SUPPLEMENTAL RESTRICTION			
22	03/17/2005	MAIL RESTRICTION REQUIREMENT	1113		-1
21	03/15/2005	REQUIREMENT FOR RESTRICTION / ELECTION			
20	02/25/2005	CASE DOCKETED TO EXAMINER IN GAU			
19	02/04/2005	IFW TSS PROCESSING BY TECH CENTER COMPLETE			
18	01/13/2004	REFERENCE CAPTURE ON IDS			
17	09/29/2003	REFERENCE CAPTURE ON IDS			
16	07/05/2001	REFERENCE CAPTURE ON IDS			
15	12/30/2004	CASE DOCKETED TO EXAMINER IN GAU			
14	03/12/2004	CASE DOCKETED TO EXAMINER IN GAU			
13.7	01/13/2004	INFORMATION DISCLOSURE STATEMENT (IDS) FILED			
13	01/13/2004	INFORMATION DISCLOSURE STATEMENT (IDS) FILED			
12.7	09/29/2003	INFORMATION DISCLOSURE STATEMENT (IDS) FILED			
12	09/29/2003	INFORMATION DISCLOSURE STATEMENT (IDS) FILED			
11	03/09/2002	CASE DOCKETED TO EXAMINER IN GAU			
10.7	07/05/2001	INFORMATION DISCLOSURE STATEMENT (IDS) FILED			
10	07/05/2001	INFORMATION DISCLOSURE STATEMENT (IDS) FILED			
9	08/20/2001	CASE DOCKETED TO EXAMINER IN GAU			
8	08/03/2001	APPLICATION DISPATCHED FROM OIPE			
7	04/12/2001	APPLICATION IS NOW COMPLETE			
6	07/23/2001	CORRESPONDENCE ADDRESS CHANGE			
5	04/12/2001	NOTICE MAILED--APPLICATION INCOMPLETE--FILING DATE ASSIGNED			
4	04/12/2001	CORRESPONDENCE ADDRESS CHANGE			
3	04/11/2001	CORRESPONDENCE ADDRESS CHANGE			
2	01/19/2001	IFW SCAN & PACR AUTO SECURITY REVIEW			
1	12/29/2000	INITIAL EXAM TEAM NN			

Search Another: Application# Search

EXPLANATION OF PTA CALCULATION

EXPLANATION OF PTE CALCULATION

To go back, right click here and select Back. To go forward, right click here and select Forward. To refresh, right click here and select Refresh.

Back to OASIS | Home page

UNITED STATES PATENT AND TRADEMARK OFFICE

Commissioner for Patents
United States Patent and Trademark Office
P.O. Box 1450
Alexandria, VA 22313-1450
www.uspto.gov

Paper No.

FOLEY & LARDNER LLP
777 EAST WISCONSIN AVENUE
MILWAUKEE WI 53202-5306

MAILED

SEP 30 2009

OFFICE OF PETITIONS

In re Patent No. 7,439,017	:	
Issued: October 21, 2008	:	
Application No. 09/976,437	:	ON APPLICATION FOR
Filed: October 15, 2001	:	PATENT TERM ADJUSTMENT
Atty Docket No. 090900-0156	:	

This is in response to the REQUEST FOR RECONSIDERATION OF PATENT TERM ADJUSTMENT UNDER 37 CFR §1.705, filed on December 10, 2008. Patentee requests that the determination of patent term adjustment be corrected from two hundred sixty-one (261) days to five hundred seventy-three (573) days.

The request for reconsideration of patent term adjustment is **DISMISSED** with respect to making any change in the patent term adjustment determination under 35 U.S.C. § 154(b) of 261 days.

BACKGROUND

On January 18, 2008, the Office mailed a notice that the initial determination of patent term adjustment under 35 U.S.C. 154(b) to date is 120 days. On October 21, 2008, the application matured into U.S. Patent No. 7,439,017, with a revised patent term adjustment of 261 days. The Office determined that the 418 days of Office delay pursuant to 35 U.S.C. 154(b)(1)(B) and 37 CFR 1.702(b) overlaps with the 316 days of Office delay pursuant to 35 U.S.C. 154(b)(1)(A) and 37 CFR 1.702(a)(1) and (a)(2), accorded prior to the filing of the request for continued examination. As such, 102 additional days of patent term adjustment were entered at issuance under the three-year pendency provision. Given the additional 99 days of Office delay pursuant to 37 CFR 1.702(a)(4) accorded subsequent to the filing of the RCE, and the applicant delay of 256 days, the

patent issued with a revised patent term adjustment of 261 (361 + 102 + 99 - 256) days.

On December 10, 2008, patentee timely submitted this request for reconsideration of the patent term adjustment (with required fee), asserting that the correct number of days of Patent Term Adjustment is 573 days under the courts interpretation of the overlap provision as set forth in Wyeth v. Dudas, 580 F. Supp. 2d 138, 88 U.S.P.Q. 2d 1538 (D.D.C. 2008). Patentee asserts that pursuant to Wyeth, a PTO delay under §154(b)(1)(A) overlaps with a delay under §154(b)(1)(B) only if the delays "occur on the same day."

At the outset, in is noted that Patentees have calculated a period of 390 days of patent term adjustment based on the mailing of the first Office action (restriction requirement) 14 months and 291 days after the date the application was filed, and the issuance of the patent four (4) months and 99 days after the payment of the issue fee. The Office, however, has entered an additional period of delay of 25 days for the mailing of a reply to an Office action on October 19, 2004, four (4) months and 25 days after the mailing of applicants' response filed on May 24, 2004 to the Office action mailed on October 2, 2003. Patentee did not include this 25 period in their calculation. As the period of Office delay is 415 days, rather than 390 days, the period of Office delay will be referred to as 415 days.

Further patentees have calculated a period of three year delay of 439 days. However, the three year period, which begins on October 15, 2004, three years from the filing date of October 15, 2001, and ends on December 7, 2005, the date a request for continued examination was filed, is 418 days. It is further noted, that, under the Wyeth analysis, the period of three year delay beginning on October 15, 2004 and ending on October 19, 2004 the date that an Office action in response to the reply filed on May 24, 2004 was filed, overlaps with the period of examination delay under 37 CFR 1.702(a)(1) by four (4) days. Accordingly, the non-overlapping period of three year delay asserted by patentee is 414 (418 - 4 overlap) days, not 439 days. Patentee's argument will be articulated accordingly.

Accordingly, patentee maintains that the total non-overlapping PTO delay under §154(b)(1)(A) & (B) is 829 (415 + 418 - 4 overlap) days as these periods do not occur on the same day.

Further, given the applicant delay of 256 days, patentee asserts entitlement to 573 (829 - 256) days of patent term adjustment.

OPINION

Patentee's interpretation of the period of overlap has been considered, but found inconsistent with the Office's interpretation of the overlap provision, 35 U.S.C. 154(b)(2)(A). 35 U.S.C. 154(b)(2)(A) limits the adjustment of patent term, as follows:

> to the extent that the periods of delay attributable to grounds specified in paragraph (1) overlap, the period of any adjustment granted under this subsection shall not exceed the actual number of days the issuance of the patent was delayed.

As explained in *Explanation of 37 CFR 1.703(f) and of the United States Patent and Trademark Office Interpretation of 35 U.S.C. 154(b)(2)(A)*, 69 Fed. Reg. 34283 (June 21, 2004), the Office interprets 35 U.S.C. 154(b)(2)(A) as permitting either patent term adjustment under 35 U.S.C. 154(b)(1)(A)(i)-(iv), or patent term adjustment under 35 U.S.C. 154(b)(1)(B), but not as permitting patent term adjustment under both 35 U.S.C. 154(b)(1)(A)(i)-(iv) and 154(b)(1)(B). Accordingly, the Office implements the overlap provision as follows:

> If an application is entitled to an adjustment under 35 U.S.C. 154(b)(1)(B), the entire period during which the application was pending (except for periods excluded under 35 U.S.C. 154(b)(1)(B)(i)-(iii)), and not just the period beginning three years after the actual filing date of the application, is the period of delay under 35 U.S.C. 154(b)(1)(B) in determining whether periods of delay overlap under 35 U.S.C. 154(b)(2)(A). Thus, any days of delay for Office issuance of the patent more than 3 years after the filing date of the application, which overlap with the days of patent term adjustment accorded prior to the issuance of the patent will not result in any additional patent term adjustment. See 35 U.S.C. 154(b)(1)(B), 35 U.S.C. 154(b)(2)(A), and 37 CFR § 1.703(f). See *Changes to Implement Patent Term Adjustment Under Twenty Year Term; Final Rule*, 65 Fed. Reg.

56366 (Sept. 18, 2000). See also *Revision of Patent Term Extension and Patent Term Adjustment Provisions; Final Rule*, 69 Fed. Reg. 21704 (April 22, 2004), 1282 Off. Gaz. Pat. Office 100 (May 18, 2004). See also *Explanation of 37 CFR 1.703(f) and of the United States Patent and Trademark Office Interpretation of 35 U.S.C. 154(b)(2)(A)*, 69 Fed. Reg. 34283 (June 21, 2004).

Further, as stated in the *Explanation of 37 CFR 1.703(f) and of the United States Patent and Trademark Office Interpretation of 35 U.S.C. 154(b)(2)(A)*, the Office has consistently taken the position that if an application is entitled to an adjustment under the three-year pendency provision of 35 U.S.C. 154(b)(1)(B), the entire period during which the application was pending before the Office (except for periods excluded under 35 U.S.C. 154(b)(1)(B)(i)-(iii)), and not just the period beginning three years after the actual filing date of the application, is the relevant period under 35 U.S.C. 154(b)(1)(B) in determining whether periods of delay "overlap" under 35 U.S.C. 154(b)(2)(A).

This interpretation is consistent with the statute. Taken together the statute and rule provide that to the extent that periods of delay attributable to grounds specified in 35 U.S.C. 154(b)(1) and in corresponding §1.702 overlap, the period of adjustment granted shall not exceed the actual number of days the issuance of the patent was delayed.

In this instance, the relevant period under 35 U.S.C. 154(b)(1)(B) in determining whether periods of delay "overlap" under 35 U.S.C. 154(b)(2)(A) is the period during which the application was pending before the Office beginning on the application filing date under 35 U.S.C. 111(a), October 15, 2004, and ending on the date of filing of a request for continued examination (RCE), December 7, 2005 (not including any other periods excluded under 35 U.S.C. 154(b)(1)(B)(i)-(iii)). The relevant period ends with the filing of the RCE as the three-year time frame specified in 35 U.S.C. 154(b)(1)(B) does not include the period subsequent to the filing of the RCE. 35 U.S.C. 154(b)(1)(B)(i).

Pursuant to 35 U.S.C. 154(b)(1)(A) and 37 CFR 1.702(a)(1) and (a)(2), 316 days of patent term adjustment were accorded during the pendency of the application for Office delay prior to the filing of the request for continued examination. Pursuant to 35

U.S.C. 154(b)(1)(B) and 37 CFR 1.702(b), 102 non-overlapping days of patent term adjustment accrued for Office issuance of the patent more than 3 years after the filing date of the application.

316 of the 418 days of patent term adjustment under 37 CFR 1.702(b) overlap with the 316 days of patent term adjustment under 37 CFR 1.702(a)(1) and (a)(2). Entry of both the 316 days and the 418 days is neither permitted nor warranted. 517 days is the actual number of days issuance of the patent was delayed.

Accordingly, at issuance, the Office properly entered 102 additional days of patent term adjustment for the Office taking in excess of three years to issue the patent.

CONCLUSION

In view thereof, the Office affirms that the revised determination of patent term adjustment at the time of the issuance of the patent is 261 days.

The Office acknowledges submission of the $200.00 fee set forth in 37 CFR 1.18(e). No additional fees are required.

Telephone inquiries specific to this matter should be directed to Senior Petitions Attorney Douglas I. Wood, at (571) 272-3231.

Nancy Johnson
Senior Petitions Attorney
Office of Petitions

UNITED STATES PATENT AND TRADEMARK OFFICE

Commissioner for Patents
United States Patent and Trademark Office
P.O. Box 1450
Alexandria, VA 22313-1450
www.uspto.gov

Paper No.

FOLEY & LARDNER LLP
777 EAST WISCONSIN AVENUE
MILWAUKEE WI 53202-5306

MAILED

MAR 23 2010

OFFICE OF PETITIONS

In re Patent No. 7,439,017	:	DECISION ON REQUEST
Heroux et al.	:	FOR
Issue Date: October 21, 2008	:	RECONSIDERATION OF
Application No. 09/976,437	:	PATENT TERM ADJUSTMENT
Filed: October 15, 2001	:	and
Atty Docket No.	:	NOTICE OF INTENT TO ISSUE
090900-0156	:	CERTIFICATE OF CORRECTION

This is a decision on the petition filed on November 24, 2009, which is being treated as a petition under 37 CFR 1.705(d) requesting that the patent term adjustment indicated on the above-identified patent be corrected to indicate that the term of the above-identified patent is extended or adjusted by five hundred seventy-three (573) days.

The petition to correct the patent term adjustment indicated on the above-identified patent to indicate that the term of the above-identified patent is extended or adjusted by five hundred seventy-two (572) days is **GRANTED to the extent indicated herein**.

As the period from the filing date of the request for continued examination (RCE) to the issue date of the patent is not included in the "B" delay period, the over three year period begins on October 16, 2004 and ends on December 6, 2005, the day before the RCE was filed, and not December 7, 2005 the day of filing of the RCE as calculated by patentees. See 35 U.S.C. 154(b)(1)(B)(i). Thus, the over 3 year period is 417 not 418 days, and the B delay considering the 4 days of overlap is 413, not 414 days. As such, the correct patent term adjustment is 572, not 573 days.

The Office will *sua sponte* issue a certificate of correction. Pursuant to 37 CFR 1.322, the Office will not issue a certificate of correction without first providing assignee or patentee an opportunity to be heard. Accordingly, patentees are given **one (1) month or thirty (30) days**, whichever is longer, from the mail date of this decision to respond. No extensions of time will be granted under § 1.136.

The application is being forwarded to the Certificates of Correction Branch for issuance of a certificate of correction. The Office will issue a certificate of correction indicating that the term of the above-identified patent is extended or adjusted by **five hundred seventy-two (572)** days.

Telephone inquiries specific to this matter should be directed to Senior Petitions Attorney Douglas I. Wood at (571) 272-3231.

Anthony Knight
Supervisor
Office of Petitions

Enclosure: Copy of DRAFT Certificate of Correction

UNITED STATES PATENT AND TRADEMARK OFFICE

CERTIFICATE OF CORRECTION

PATENT : 7,439,017 B2

DATED : **October 21, 2008** **DRAFT**

INVENTOR(S) : Heroux et al.

It is certified that error appears in the above-identified patent and that said Letters Patent is hereby corrected as shown below:

On the cover page,

[*] Notice: Subject to any disclaimer, the term of this patent is extended or adjusted under 35 USC 154(b) by 261 days.

Delete the phrase "by 261 days" and insert – by 572 days--

UNITED STATES PATENT AND TRADEMARK OFFICE

Commissioner for Patents
United States Patent and Trademark Office
P.O. Box 1450
Alexandria, VA 22313-1450
www.uspto.gov

Paper No. 7

JOHN L. ROGITZ
750 B STREET, SUITE 3120
SAN DIEGO, CA 92101

COPY MAILED

SEP 0 1 2004

OFFICE OF PETITIONS

In re Application of
Akihiko Toyoshima
Application No. 09/976,455
Filed: October 11, 2001
Attorney Docket No. 50P4257.02

ON PETITION

This is a decision on the petition under 37 CFR 1.137(b), filed July 29, 2004, to revive the above-identified application.

The petition is **GRANTED**.

The above-identified application became abandoned for failure to reply in a timely manner to the Notice to File Missing Parts of Application (Notice) mailed November 14, 2001. The Notice set a period for reply of two (2) months from the mail date of the Notice. No extensions of time under the provisions of 37 CFR 1.136(a) were obtained. Accordingly, the above-identified application became abandoned on January 15, 2002.

Telephone inquiries concerning this decision should be directed to Irvin Dingle at (703) 306-5684.

The application is being forwarded to the Initial Patent Examination Unit.

Irvin Dingle
Petitions Examiner
Office of Petitions
Office of the Deputy Commissioner
for Patent Examination Policy

UNITED STATES PATENT AND TRADEMARK OFFICE

Commissioner for Patents
United States Patent and Trademark Office
P.O. Box 1450
Alexandria, VA 22313-1450
www.uspto.gov
DIW Jul-06

OBER / KALER
C/O ROYAL W. CRAIG
120 EAST BALTIMORE STREET
BALTIMORE MD 21202

COPY MAILED

JUL 28 2006

OFFICE OF PETITIONS

In re Application of	:	
Stephen Butz	:	DECISION ON PETITION TO
Application No. 09/976,481	:	WITHDRAW HOLDING OF
Filed: 12 October, 2001	:	ABANDONMENT
Atty Docket No. BUTZ-PA	:	

This is a decision on the petition filed on 9 June, 2006, to withdraw the holding of abandonment in the above-identified application.

The petition is **DISMISSED**.

The application was held abandoned for failure to timely respond to the non-final Office action mailed on 3 November, 2005. The filing of the present petition precedes the mailing of Notice of Abandonment.

Petitioner asserts that an amendment was timely filed by facsimile on 16 January, 2006. Petitioner asserts that the amendment was sent to the Examiner's personal facsimile number at the direction of the Technology Center receptionist because an old facsimile number was listed in the Office action.

The petition is dismissed because petitioners have not provided proper evidence that the facsimile was transmitted to the USPTO. Specifically, MPEP 711.03(c) states, in pertinent part:

> Petition To Withdraw Holding of Abandonment Based on Evidence That a Reply Was Timely Mailed or Filed

37 CFR 1.10(c) through 1.10(e) >and 1.10(g)< set forth procedures for petitioning the Director of the USPTO to accord a filing date to correspondence as of the date of deposit of the correspondence as "Express Mail." A petition to withdraw the holding of abandonment relying upon a timely reply placed in "Express Mail" must include an appropriate petition under 37 CFR 1.10(c), (d), * (e)>, or (g)< (see MPEP § 513). When a paper is shown to have been mailed to the Office using the "Express Mail" procedures, the paper must be entered in PALM with the "Express Mail" date. Similarly, applicants may establish that a reply was filed with a postcard receipt that properly identifies the reply and provides prima facie evidence that the reply was timely filed. See MPEP § 503. For example, if the application has been held abandoned for failure to file a reply to a first Office action, and applicant has a postcard receipt showing that an amendment was timely filed in response to the Office action, then the holding of abandonment should be withdrawn upon the filing of a petition to withdraw the holding of abandonment. When the reply is shown to have been timely filed based on a postcard receipt, the reply must be entered into PALM using the date of receipt of the reply as shown on the post card receipt.

Where a certificate of mailing under 37 CFR 1.8, but not a postcard receipt, is relied upon in a petition to withdraw the holding of abandonment, see 37 CFR 1.8(b) and MPEP § 512. As stated in 37 CFR 1.8(b)(3) the statement that attests to the previous timely mailing or transmission of the correspondence must be on a personal knowledge basis, or to the satisfaction of the Director of the USPTO. If the statement attesting to the previous timely mailing is not made by the person who signed the Certificate of Mailing (i.e., there is no personal knowledge basis), then the statement attesting to the previous timely mailing should include evidence that supports the conclusion that the correspondence was actually mailed (e.g., copies of a mailing log establishing that correspondence was mailed for that application).

When the correspondence is shown to have been timely filed based on a certificate of mailing, the correspondence is entered into PALM with the actual date of receipt (i.e., the date that the duplicate copy

> of the papers was filed with the statement under 37 CFR 1.8). > 37 CFR 1.8(b) also permits applicant to notify the Office of a previous mailing or transmission of correspondence and submit a statement under 37 CFR 1.8(b)(3) accompanied by a duplicate copy of the correspondence when a reasonable amount of time (e.g., more than one month) has elapsed from the time of mailing or transmitting of the correspondence. Applicant does not have to wait until the application becomes abandoned before notifying the Office of the previous mailing or transmission of the correspondence. Applicant should check the private Patent Application Information Retrieval (PAIR) system for the status of the correspondence before notifying the Office. See MPEP § 512.<

Any petition to withdraw the holding of abandonment based on a Certificate of Transmission by facsimile must include the following requirements:

(1) A copy of the original response bearing a signed Certificate of Transmission which includes the date of signing; and

(2) A statement under 37 CFR 1.8(b)(3) attesting to the personal knowledge of transmitting the ***original*** response on the date indicated on the Certificate of Transmission (*see* 37 CFR 1.8 and MPEP 512).

The petition lacks item (2) above. Petitioners have not shown that the correspondence was transmitted with a Certificate of Transmission in accordance with 37 CFR 1.8. The sending unit's report, without more, is not sufficient evidence of the timely filing of a response by facsimile. Any renewed petition should be accompanied by a copy of the Certificate of Mailing.

If petitioner is unable to provide evidence of the timely submission of the amendment by facsimile, petitioner may wish to consider filing a petition to revive under 37 CFR 1.137(b).

Any request for reconsideration must be filed within **TWO MONTHS** of the date of this decision. **This period may not be extended.**[1]

---

[1] 37 CFR 1.181(f).

Further correspondence with respect to this matter should be addressed as follows:

By mail: Mail Stop Petition
Commissioner for Patents
P.O. Box 1450
Alexandria, VA 22313-1450

By FAX: (571) 273-8300
Attn: Office of Petitions

By hand: Customer Service Window
Mail Stop Petition
Randolph Building
401 Dulany Street
Alexandria, VA 22314

Telephone inquiries concerning this matter may be directed to the undersigned at (571)272-3231.

D Wood

Douglas I. Wood
Senior Petitions Attorney
Office of Petitions

UNITED STATES PATENT AND TRADEMARK OFFICE

COMMISSIONER FOR PATENTS
UNITED STATES PATENT AND TRADEMARK OFFICE
P.O. BOX 1450
ALEXANDRIA, VA 22313-1450
www.uspto.gov
DIW Nov-06

OBER / KALER
C/O ROYAL W. CRAIG
120 EAST BALTIMORE STREET
BALTIMORE MD 21202

COPY MAILED
NOV 07 2006
OFFICE OF PETITIONS

In re Application of :
Stephen Butz :
Application No. 09/976,481 : DECISION ON PETITION
Filed: 12 October, 2001 :
Attorney Docket No. BUTZ-PA :

This is a decision on the petition filed on 14 August, 2006, under 37 CFR 1.137(b),[1] to revive the above-identified application.

The petition is **GRANTED**.

The application became abandoned on 4 February, 2006, for failure to timely reply to the non-final Office action mailed on 3 November, 2005. The petition filed on 9 June, 2006, to withdraw the holding of abandonment was dismissed on 28 July, 2006. Notice of Abandonment was mailed on 23 August, 2006.

---

[1] Effective December 1, 1997, the provisions of 37 CFR 1.137(b) now provide that where the delay in reply was unintentional, a petition may be filed to revive an abandoned application or a lapsed patent pursuant to 37 CFR 1.137(b). A grantable petition filed under the provisions of 37 CFR 1.137(b) must be accompanied by:

(1) the required reply, unless previously filed. In a nonprovisional application abandoned for failure to prosecute, the required reply may be met by the filing of a continuing application. In a nonprovisional utility or plant application filed on or after June 8, 1995, and abandoned for failure to prosecute, the required reply may also be met by the filing of a request for continuing examination in compliance with § 1.114. In an application or patent, abandoned or lapsed for failure to pay the issue fee or any portion thereof, the required reply must be the payment of the issue fee or any outstanding balance thereof. In an application, abandoned for failure to pay the publication fee, the required reply must include payment of the publication fee.

(2) the petition fee as set forth in 37 CFR 1.17(m);

(3) a statement that the entire delay in filing the required reply from the due date for the reply until the filing of a grantable petition pursuant to 37 CFR 1.137(b) was unintentional. The Commissioner may required additional information where there is a question whether the delay was unintentional; and

(4) any terminal disclaimer (and fee as set forth in 37 CFR 1.20(d)) required pursuant to 37 CFR 1.137(c)).

The application is referred to Technology Center Art Unit 2163 for further processing.

Telephone inquiries concerning this matter may be directed to the undersigned at (571)272-3231.

DWood

Douglas I. Wood
Senior Petitions Attorney
Office of Petitions

UNITED STATES PATENT AND TRADEMARK OFFICE

COMMISSIONER FOR PATENTS
UNITED STATES PATENT AND TRADEMARK OFFICE
WASHINGTON, D.C. 20231
www.uspto.gov

Paper No. 8

JAMES E. EAKIN
MCDERMOTT, WILL & EMERY
3150 PORTER DRIVE
PALO ALTO, CA 94304-1212

COPY MAILED

AUG 1 4 2002

OFFICE OF PETITIONS

In re Application of
David Cook et al.
Application No. 09/976,507
Filed: October 12, 2001
Attorney Docket No. 62967-034

: DECISION DISMISSING
: PETITION

This is a decision on the petition filed April 5, 2002, requesting that the above-identified application be accorded a filing date of October 12, 2001, with Page 2 of the specification as a part of the original disclosure.

On October 12, 2001, the application was filed.

On February 6, 2002, the Office of Initial Patent Examination (OIPE) mailed a Notice of Omitted Items stating that the application had been accorded a filing date January 15, 2002, but that Page 2 of the specification (description and claims) appeared to have been omitted from the application.[1]

In response, on April 5, 2002, the present petition was filed. Petitioners argue that a complete application was present on October 12, 2001, for filing date purposes. Petitioners point to their postcard receipt and a copy of the Application Transmittal Sheet as evidence that Page 2 of the specification was among the application papers filed on October 12, 2001. Petitioners request that the application be accorded a filing date of October 12, 2001, with Page 2 as a part of the original disclosure.

The argument and evidence supplied with the petition have been carefully considered, but are not persuasive. The USPTO has a well-established and well-publicized practice of providing a receipt for papers filed in the USPTO to any applicant desiring a receipt. The practice requires that any paper for which a receipt is desired be filed in the USPTO with a self-addressed postcard identifying the paper. A postcard receipt which

[1]The notice mailed February 6, 2002 erroneously listed the filing date accorded as that of January 15, 2002. The filing date accorded is actually October 12, 2001. January 15, 2002 is the date the oath and declaration was filed in response to the Notice to File Missing Parts mailed November 16, 2001.

itemizes and properly identifies the papers which are being filed serves as prima facie evidence of receipt in the USPTO of all the items listed thereon on the date stamped thereon by the USPTO. See section 503, Manual of Patent Examining Procedure (MPEP 503). Unfortunately, petitioners' postcard receipt does not bear an Office-date stamp from the USPTO. As such, the postcard receipt does not serve as evidence that the items listed therein were received in the USPTO. If petitioners have a copy of the postcard receipt for this application with a USPTO "Office date" stamp, a copy of that postcard should be submitted with any renewed petition. Furthermore, an application transmittal is, at best, only evidence of what was intended to be filed, not evidence of what was actually received or filed in the USPTO.

The petition is dismissed.

The copy of Page 2 of the specification supplied with the present petition will not be used for processing or examination, but will be retained in the application file. Petitioners may choose to file Page 2 as a preliminary amendment. If Page 2 is filed as a preliminary amendment, the amendment will be reviewed for new matter.

The petition fee of $130.00 will be charged to counsel's deposit account, No. 50-0385, in accordance with the authorization presented in the petition, since the present petition was not necessitated by Office error.

The application is being returned to Initial Patent Examination Division for further processing with a filing date of October 12, 2001, using the application papers filed on that date and the application papers filed January 15, 2002.

Telephone inquiries concerning this matter may be directed to the undersigned Petitions Attorney at (703) 305-4497.

Patricia Faison-Ball

Patricia Faison-Ball
Senior Petitions Attorney
Office of Petitions
Office of the Deputy Commissioner
for Patent Examination Policy

UNITED STATES PATENT AND TRADEMARK OFFICE

UNITED STATES DEPARTMENT OF COMMERCE
United States Patent and Trademark Office
Address: COMMISSIONER FOR PATENTS
P.O. Box 1450
Alexandria, Virginia 22313-1450
www.uspto.gov

IBM CORPORATION, T.J. WATSON RESEARCH CENTER
P.O. BOX 218
YORKTOWN HEIGHTS, NY 10598

Mail Date: 04/20/2010

Applicant	: Genady Grabarnik	: DECISION ON REQUEST FOR
Patent Number	: 7631058	: RECALCULATION of PATENT
Issue Date	: 12/08/2009	: TERM ADJUSTMENT IN VIEW
Appliction No	: 09/976,543	: OF WYETH AND NOTICE OF INTENT TO
Filed	: 10/12/2001	: ISSUE CERTIFICATE OF CORRECTION
		:

The Request for Recalculation is **GRANTED** to the extent indicated.

The patent term adjustment has been determined to be **1494** days. The USPTO will *sua sponte* issue a certificate of correction reflecting the amount of PTA days determined by the recalculation.

Prior to the issuance of the certificate of correction, the USPTO will afford patentee an opportunity to be heard and request reconsideration. Accordingly, patentee has **one month or thirty (30) days**, whichever is longer, to file a request for reconsideration of this patent term adjustment calculation. See 35 U.S.C. 154(b)(3)(B)(ii) and 37 CFR 1.322(a)(4). No extensions of time will be granted under 37 CFR 1.136.

Patentee should use document code PET.OP if electronically filing a request for reconsideration of this patent term adjustment calculation. The patentee must also include the information required by 37 CFR 1.705(b)(2) and the fee required by 37 CFR 1.18(e). If patentee does not file a timely request for reconsideration of this patent term adjustment calculation including the information required by 37 CFR 1.705(b)(2) and the fee required by 37 CFR 1.18(e), the USPTO will issue a certificate of correction reflecting the PTA determination noted above.

Patentee should be aware that in order to preserve the right to review in the United States District Court for the District of Columbia of the USPTO patent term adjustment determination, patentee must ensure that he or she also take the steps required under 35 U.S.C. 154(b)(4)(A) in a timely manner. Nothing in the request for recalculation should be construed as providing an alternative time frame for commencing a civil action under 35 U.S.C. 154(b)(4)(A).

Any questions concerning this decision should be directed to the Office of Patent Legal Administration at 571-272-7702.

UNITED STATES PATENT AND TRADEMARK OFFICE

COMMISSIONER FOR PATENTS
UNITED STATES PATENT AND TRADEMARK OFFICE
P.O. BOX 1450
ALEXANDRIA, VA 22313-1450
www.uspto.gov

Kenneth G. Dextras
902 5th Street
New Westminster, BC
V3L2Y4
CANADA

MAILED

SEP 13 2004

DIRECTOR'S OFFICE
TECHNOLOGY CENTER 3600

In re Application of
Kenneth Gerald Dextras
Application No. 09/976,563
Filed: October 15, 2001
For: BUILDING WALL HUMIDITY CONTROL SYSTEM

DECISION ON PETITION TO WITHDRAW THE HOLDING OF ABANDONMENT

This is in response to applicant's petition to withdraw the holding of abandonment filed in the United States Patent and Trademark Office (USPTO) on August 25, 2004.

The petition is **DISMISSED**.

A review of the file records reveals that the application was held abandoned for failure to timely file a reply to the Notice of Non-Compliant Amendment mailed December 24, 2003. This letter was mailed in response to the amendment filed December 2, 2003.

Applicant states that the Notice mailed December 24, 2003 was not received.

There is a strong presumption that mail properly addressed and delivered to the United States Postal Service was in fact delivered to the addressee. An allegation that an Office communication was not received may be considered in a formal petition for the withdrawal of the holding of abandonment, in accordance with *Delgar Inc. v. Schuyler*, 172 USPQ 513. However, the presumption that the Office communication was delivered to applicant may be overcome by a showing that the communication was not, in fact, received as indicated below.

Applicant's (in this case the inventor, Mr. Kenneth Dextras) statements of non-receipt should include a statement by him, and by anyone else at applicant's correspondence address, who would have handled the Office communication, and include any available documentary evidence of mail received, covering a reasonable period after the date of the Office communication, to show non-receipt of the communication in question. Copies of records on which the receipt date of the Office communication would have been entered had it been received, (*e.g.*, a copy of the outside of the file maintained by applicant), are required if available. Also, a showing of any docket records *or other method* which would serve as a reminder of a response due date should be submitted. Whatever method applicant uses as a reminder, and submits in response to this decision should be adequately explained. Also, a statement is required that a search of the file maintained by applicant, or any other location where correspondence from the USPTO is kept, failed to find a copy of the Office

communication in question. Finally, applicant must state that he was in fact at the correspondence address of record at the time the Office action would have been received.

Any such exhibits should be submitted as part of statement(s) showing that no Office communication was ever received.

Regarding applicant's request to correspond by email, it is noted that all business with the Patent and Trademark Office should be transacted in writing. The action of the Patent and Trademark Office will be based exclusively on the written record in the Office. No attention will be paid to any alleged oral promise, stipulation, or understanding in relation to which there is disagreement or doubt (see 37 CFR 1.2).

Any request for reconsideration of this decision must be submitted within **TWO (2) MONTHS** from the mail date of this decision. Extensions of time under 37 CFR 1.136(a) are permitted. The reconsideration request should include a cover letter entitled "Renewed Petition Under 37 CFR 1.181" and should be mailed to the Commissioner for Patents, P.O. Box 1450, Technology Center 3600, Alexandria, VA 22313-1450.

Steven N. Meyers
Special Programs Examiner
Patent Technology Center 3600
(703) 308-3868

SNM/vdb: 9/9/04

UNITED STATES PATENT AND TRADEMARK OFFICE

UNITED STATES DEPARTMENT OF COMMERCE
United States Patent and Trademark Office
Address: COMMISSIONER FOR PATENTS
P.O. Box 1450
Alexandria, Virginia 22313-1450
www.uspto.gov

QUALCOMM INCORPORATED
5775 MOREHOUSE DR.
SAN DIEGO, CA 92121

Mail Date: 07/20/2010

Applicant	: Tao Chen	: DECISION ON REQUEST FOR
Patent Number	: 7649829	: RECALCULATION of PATENT
Issue Date	: 01/19/2010	: TERM ADJUSTMENT IN VIEW
Application No	: 09/976,591	: OF WYETH AND NOTICE OF INTENT TO
Filed	: 10/12/2001	: ISSUE CERTIFICATE OF CORRECTION
		:

The Request for Recalculation is **GRANTED** to the extent indicated.

The patent term adjustment has been determined to be **1318** days. The USPTO will *sua sponte* issue a certificate of correction reflecting the amount of PTA days determined by the recalculation.

Prior to the issuance of the certificate of correction, the USPTO will afford patentee an opportunity to be heard and request reconsideration. Accordingly, patentee has **one month or thirty (30) days**, whichever is longer, to file a request for reconsideration of this patent term adjustment calculation. See 35 U.S.C. 154(b)(3)(B)(ii) and 37 CFR 1.322(a)(4). No extensions of time will be granted under 37 CFR 1.136.

Patentee should use document code PET.OP if electronically filing a request for reconsideration of this patent term adjustment calculation. The patentee must also include the information required by 37 CFR 1.705(b)(2) and the fee required by 37 CFR 1.18(e). If patentee does not file a timely request for reconsideration of this patent term adjustment calculation including the information required by 37 CFR 1.705(b)(2) and the fee required by 37 CFR 1.18(e), the USPTO will issue a certificate of correction reflecting the PTA determination noted above.

Patentee should be aware that in order to preserve the right to review in the United States District Court for the District of Columbia of the USPTO patent term adjustment determination, patentee must ensure that he or she also take the steps required under 35 U.S.C. 154(b)(4)(A) in a timely manner. Nothing in the request for recalculation should be construed as providing an alternative time frame for commencing a civil action under 35 U.S.C. 154(b)(4)(A).

Any questions concerning this decision should be directed to the Office of Patent Legal Administration at 571-272-7702.

UNITED STATES PATENT AND TRADEMARK OFFICE

Commissioner for Patents
United States Patent and Trademark Office
P.O. Box 1450
Alexandria, VA 22313-1450
www.uspto.gov

WELLS ST. JOHN P.S.
601 W. FIRST AVENUE, SUITE 1300
SPOKANE WA 99201

COPY MAILED

NOV 0 2 2004

OFFICE OF PETITIONS

ON PETITION

In re Application of	:
Jigish G. Trivedi	:
Application No. 09/976,635	:
Filed: October 12, 2001	:
Attorney Docket No. MI22-1771	:

This is a decision on the petition, filed October 26, 2004, under 37 CFR 1.313(c)(2) to withdraw the above-identified application from issue after payment of the issue fee.

The petition is **GRANTED.**

The above-identified application is withdrawn from issue for consideration of a submission under 37 CFR 1.114 (request for continued examination). See 37 CFR 1.313(c)(2).

Petitioner is advised that the issue fee paid on July 15, 2004 in the above-identified application cannot be refunded. If, however, the above-identified application is again allowed, petitioner may request that it be applied towards the issue fee required by the new Notice of Allowance.[1]

Telephone inquiries should be directed to the undersigned at (571) 272-3208.

The examiner of Technology Center AU 2813 will consider the request for continued examination under 37 CFR 1.114.

Karen Creasy

Karen Creasy
Petitions Examiner
Office of Petitions
Office of the Deputy Commissioner
for Patent Examination Policy

---

[1] The request to apply the issue fee to the new Notice may be satisfied by completing and returning the new Issue Fee Transmittal Form PTOL-85(b), which includes the following language thereon: "Commissioner for Patents is requested to apply the Issue Fee and Publication Fee (if any) or re-apply any previously paid issue fee to the application identified above." Petitioner is advised that, whether a fee is indicated as being due or not, the Issue Fee Transmittal Form **must** be completed and timely submitted to avoid abandonment. Note the language in bold text on the first page of the Notice of Allowance and Fee(s) Due (PTOL-85).

UNITED STATES DEPARTMENT OF COMMERCE
Patent and Trademark Office
ASSISTANT SECRETARY OF COMMERCE AND
COMMISSIONER OF PATENTS AND TRADEMARKS
Washington, DC 2023

June 26, 2002

Steven W. Parmelee
Townsend and Townsend and Crew
Two Embarcadero Center
8th Floor
San Francisco, CA 94111

In re application of:
Loren R. Pickart DECISION ON PETITION
Serial No.: 09/976,646
Filed: October 11, 2001

For: METHODS AND COMPOSITIONS FOR
INCREASING SKIN REMODELING

This is a decision on the petition received March 8, 2002, to resend the Notice of Missing Parts.

On March 8, 2002, the office received a communication from the attorney of record. Enclosed was an acknowledgment that the attorney received the Notice to File Missing Part on January 15, 2002. This time frame did not give the attorney a reasonable time to response to the Notice of Missing Parts

The evidence submitted is sufficient to establish that the petitioners received the Notice to File Missing Parts of Application on January 15, 2002

The petition is hereby GRANTED.

The office regrets any inconvenience this may have caused counsel.

A new Notice to File Missing Part is enclosed with this Decision setting forth a new response period of two months from the date of the notice.

Telephone inquiries concerning this matter may be directed to Doshie E. Day at (703) 308-3640.

Doshie E. Day
Program Management Assistant
Office Initial Patent Examination.

UNITED STATES PATENT AND TRADEMARK OFFICE

Commissioner for Patents
United States Patent and Trademark Office
P.O. Box 1450
Alexandria, VA 22313-1450
www.uspto.gov

TOWNSEND AND TOWNSEND AND CREW, LLP
TWO EMBARCADERO CENTER
EIGHTH FLOOR
SAN FRANCISCO CA 94111-3834

COPY MAILED

MAY 2 5 2006

OFFICE OF PETITIONS

In re Application of :
Loren R. Pickart :
Application No. 09/976,646 :
Filed: October 11, 2001 :
Attorney Docket No.: 15672-000710

ON PETITION

This is a decision on the petition filed March 2, 2006 under 37 CFR 1.137(b),[1] to revive the above-identified application.

The petition is **GRANTED**.

This application became abandoned for failure to timely reply to the non-Final Office Action mailed November 26, 2003. A shortened statutory period of three months was set for replying to the non-Final Office Action. No extensions of time having been requested, this application became abandoned February 27, 2004. Accordingly, a Notice of Abandonment was mailed on June 21, 2004.

This matter is being referred to Technology Center 1654 for appropriate action on the amendment filed March 2, 2006.

Telephone inquiries concerning this matter should be directed to the undersigned Petitions Attorney at (571) 272-3212.

Patricia Faison-Ball
Senior Petitions Attorney
Office of Petitions

---

[1]Effective December 1, 1997, the provisions of 37 CFR 1.137(b) now provide that where the delay in reply was unintentional, a petition may be filed to revive an abandoned application or a lapsed patent pursuant to 37 CFR 1.137(b). A grantable petition filed under the provisions of 37 CFR 1.137(b) must be accompanied by:

(1) the required reply, unless previously filed. In a nonprovisional application abandoned for failure to prosecute, the required reply may be met by the filing of a continuing application. In a nonprovisional application filed on or after June 8, 1995, and abandoned for failure to prosecute, the required reply may also be met by the filing of a request for continued examination in compliance with § 1.114. In an application or patent, abandoned or lapsed for failure to pay the issue fee or any portion thereof, the required reply must be the payment of the issue fee or any outstanding balance thereof. In an application abandoned for failure to pay the publication fee, the required reply must include payment of the publication fee.

(2) the petition fee as set forth in 37 CFR 1.17(m);

(3) a statement that the entire delay in filing the required reply from the due date for the reply until the filing of a grantable petition pursuant to 37 CFR 1.137(b) was unintentional. The Commissioner may required additional information where there is a question whether the delay was unintentional; and

(4) any terminal disclaimer (and fee as set forth in 37 CFR 1.20(d)) required pursuant to 37 CFR 1.137(c)).

Approved for use through 04/30/2009. OMB 0651-0016
U.S. Patent and Trademark Office: U.S. DEPARTMENT OF COMMERCE
Under the Paperwork Reduction Act of 1995, no persons are required to respond to a collection of information unless it displays valid OMB control number.

PETITION TO ACCEPT UNINTENTIONALLY DELAYED PAYMENT OF MAINTENANCE FEE IN AN EXPIRED PATENT (37 CFR 1.378(c))

Patent Number	Issue Date (YYYY-MM-DD)	Application Number	Filing Date (YYYY-MM-DD)	Docket Number (if applicable)
6,699,535	2004-03-02	09/976,663	2001-10-15	24319-81201

CAUTION: Maintenance fee (and surcharge, if any) payment must correctly identify: (1) the patent number and (2) the application number of the actual U.S. application leading to issuance of that patent to ensure the fee(s) is/are associated with the correct patent. 37 CFR 1.366(c) and (d).

SMALL ENTITY
☒ Patentee claims, or has previously claimed, small entity status. See 37 CFR 1.27.

LOSS OF ENTITLEMENT TO SMALL ENTITY STATUS
☐ Patentee is no longer entitled to small entity status. See 37 CFR 1.27(g)

NOT Small Entity		Small Entity	
Fee	Code	Fee	Code
○ 3 ½ year	(1551)	◉ 3 ½ year	(2551)
○ 7 ½ year	(1552)	○ 7 ½ year	(2552)
○ 11 ½ year	(1553)	○ 11 ½ year	(2553)

SURCHARGE
The surcharge required by 37 CFR 1.20(i)(2) (Fee Code 1558) must be paid as a condition of accepting unintentionally delayed payment of the maintenance fee.

MAINTENANCE FEE (37 CFR 1.20(e)-(g))
The appropriate maintenance fee must be submitted with this petition.

STATEMENT
THE UNDERSIGNED CERTIFIES THAT THE DELAY IN PAYMENT OF THE MAINTENANCE FEE TO THIS PATENT WAS UNINTENTIONAL

PETITIONER(S) REQUEST THAT THE DELAYED PAYMENT OF THE MAINTENANCE FEE BE ACCEPTED AND THE PATENT REINSTATED

THIS PORTION MUST BE COMPLETED BY THE SIGNATORY OR SIGNATORIES

37 CFR 1.378(d) states: "Any petition under this section must be signed by an attorney or agent registered to practice before the Patent and Trademark Office, or by the patentee, the assignee, or other party in interest."

I certify, in accordance with 37 CFR 1.4(d)(4) that I am

◉ An attorney or agent registered to practice before the Patent and Trademark Office

○ A sole patentee

○ A joint patentee; I certify that I am authorized to sign this submission on behalf of all the other patentees.

○ A joint patentee; all of whom are signing this e-petition

○ The assignee of record of the entire interest

Patent Practitioner			
A signature of the applicant or representative is required in accordance with 37 CFR 1.33 and 10.18. Please see 37 CFR 1.4(d) for the form of the signature			
Signature	/Peter H. Kang, Reg. No. 40,350/	Date (YYYY-MM-DD)	2008-07-09
Name	Peter H. Kang	Registration Number	40350

This collection of information is required by 37 CFR 1.378(c). The information is required to obtain or retain a benefit by the public which is to file (and by the USPTO to process) an application. Confidentiality is governed by 35 U.S.C. 122 and 37 CFR 1.11 and 1.14. This collection is estimated to take 1 hour to complete, including gathering, preparing, and submitting the completed application form to the USPTO. Time will vary depending upon the individual case. Any comments on the amount of time you require to complete this form and/ or suggestions for reducing this burden, should be sent to the Chief Information Officer, U.S. Patent and Trademark Office, U.S. Department of Commerce, P.O. Box 1450, Alexandria, VA 22313-1450. DO NOT SEND FEES OR COMPLETED FORMS TO THIS ADDRESS. **This form can only be used when in conjunction with EFS-Web. If this form is mailed to the USPTO, it may cause delays in reinstating the patent.**

Privacy Act Statement

The Privacy Act of 1974 (P.L. 93-579) requires that you be given certain information in connection with your submission of the attached form related to a patent application or patent. Accordingly, pursuant to the requirements of the Act, please be advised that: (1) the general authority for the collection of this information is 35 U.S.C. 2(b)(2); (2) furnishing of the information solicited is voluntary; and (3) the principal purpose for which the information is used by the U.S. Patent and Trademark Office is to process and/or examine your submission related to a patent application or patent. If you do not furnish the requested information, the U.S. Patent and Trademark Office may not be able to process and/or examine your submission, which may result in termination of proceedings or abandonment of the application or expiration of the patent.

The information provided by you in this form will be subject to the following routine uses:

1. The information on this form will be treated confidentially to the extent allowed under the Freedom of Information Act (5 U.S.C. 552) and the Privacy Act (5 U.S.C. 552a). Records from this system of records may be disclosed to the Department of Justice to determine whether the Freedom of Information Act requires disclosure of these record s.

2. A record from this system of records may be disclosed, as a routine use, in the course of presenting evidence to a court, magistrate, or administrative tribunal, including disclosures to opposing counsel in the course of settlement negotiations.

3. A record in this system of records may be disclosed, as a routine use, to a Member of Congress submitting a request involving an individual, to whom the record pertains, when the individual has requested assistance from the Member with respect to the subject matter of the record.

4. A record in this system of records may be disclosed, as a routine use, to a contractor of the Agency having need for the information in order to perform a contract. Recipients of information shall be required to comply with the requirements of the Privacy Act of 1974, as amended, pursuant to 5 U.S.C. 552a(m).

5. A record related to an International Application filed under the Patent Cooperation Treaty in this system of records may be disclosed, as a routine use, to the International Bureau of the World Intellectual Property Organization, pursuant to the Patent Cooperation Treaty.

6. A record in this system of records may be disclosed, as a routine use, to another federal agency for purposes of National Security review (35 U.S.C. 181) and for review pursuant to the Atomic Energy Act (42 U.S.C. 218(c)).

7. A record from this system of records may be disclosed, as a routine use, to the Administrator, General Services, or his/her designee, during an inspection of records conducted by GSA as part of that agency's responsibility to recommend improvements in records management practices and programs, under authority of 44 U.S.C. 2904 and 2906. Such disclosure shall be made in accordance with the GSA regulations governing inspection of records for this purpose, and any other relevant (i.e., GSA or Commerce) directive. Such disclosure shall not be used to make determinations about individuals.

8. A record from this system of records may be disclosed, as a routine use, to the public after either publication of the application pursuant to 35 U.S.C. 122(b) or issuance of a patent pursuant to 35 U.S.C. 151. Further, a record may be disclosed, subject to the limitations of 37 CFR 1.14, as a routine use, to the public if the record was filed in an application which became abandoned or in which the proceedings were terminated and which application is referenced by either a published application, an application open to public inspections or an issued patent.

9. A record from this system of records may be disclosed, as a routine use, to a Federal, State, or local law enforcement agency, if the USPTO becomes aware of a violation or potential violation of law or regulation.

UNITED STATES PATENT AND TRADEMARK OFFICE

Commissioner for Patents
United States Patent and Trademark Office
P.O. Box 1450
Alexandria, VA 22313-1450
www.uspto.gov

In re Patent No. 6699535
Issue Date: March 2,2004
Application No. 09976663
Filed: October 15,2001
Attorney Docket No. M-12168 US

:
:DECISION GRANTING PETITION
:UNDER 37 CFR 1.378(c)
:

This is a decision on the electronic petition, filed July 9,2008 ,under 37 CFR 1.378(c) to accept the unintentionally delayed payment of the 3.5 year maintenance fee for the above-identified patent.

The petition is GRANTED.

The maintenance fee is accepted, and the above-identified patent reinstated as of July 9,2008 . This decision also constitutes notice that the fee has been accepted. An electronic copy of the petition and this decision has been created as an entry in an Image File Wrapper. Nevertheless, petitioner should print and retain an independent copy

Telephone inquires related to this electronic decision should be directed to the Electronic Business Center at 1-866-217-9197.

UNITED STATES PATENT AND TRADEMARK OFFICE

COMMISSIONER FOR PATENTS
UNITED STATES PATENT AND TRADEMARK OFFICE
WASHINGTON, D.C. 20231
www.uspto.gov

Paper No. 9

NANCY W. VENSKO
KNOBBE MARTENS OLSON BEAR LLP
620 NEWPORT CENTER DRIVE
SIXTEENTH FLOOR
NEWPORT BEACH, CA 92660

COPY MAILED

JUN 2 6 2002

OFFICE OF PETITIONS

In re Application of
Carl R. Merril
Application No. 09/976,667
Filed: October 10, 2001
Attorney Docket No. NIH151.001C1

NOTICE

This is a notice regarding your request for acceptance of a fee deficiency submission under 37 CFR 1.28. On September 1, 1998, the Court of Appeals for the Federal Circuit held that 37 CFR 1.28(c) is the sole provision governing the time for correction of the erroneous payment of the issue fee as a small entity. **See DH Technology v. Synergystex International, Inc. 154 F.3d 1333, 47 USPQ2d 1865 (Fed. Cir. Sept. 1, 1998).**

The Office no longer investigates or rejects original or reissue applications under 37 CFR 1.56. **1098 Off. Gaz. Pat. Office 502 (January 3, 1989).** Therefore, nothing in this Notice is intended to imply that an investigation was done.

Your fee deficiency submission under 37 CFR 1.28 is hereby **ACCEPTED**.

Inquiries related to this communication should be directed to the Office of Petitions Staff at (703) 305-9285.

This file is being forwarded to Technology Center 1600.

Irvin Dingle
Petitions Examiner
Office of Petitions
Office of the Deputy Commissioner
for Patent Examination Policy

UNITED STATES PATENT AND TRADEMARK OFFICE

Commissioner for Patents
United States Patent and Trademark Office
P.O. Box 1450
Alexandria, VA 22313-1450
www.uspto.gov

In re Patent No. 6844180
Issue Date: January 18,2005
Application No. 09976674
Filed: October 12,2001
Attorney Docket No. 70669

:
:DECISION GRANTING PETITION
:UNDER 37 CFR 1.378(c)
:

This is a decision on the electronic petition, filed August 20,2009 ,under 37 CFR 1.378(c) to accept the unintentionally delayed payment of the 3.5 year maintenance fee for the above-identified patent.

The petition is **GRANTED**.

The maintenance fee is accepted, and the above-identified patent reinstated as of August 20,2009 . This decision also constitutes notice that the fee has been accepted. An electronic copy of the petition and this decision has been created as an entry in the Image File Wrapper. Nevertheless, petitioner should print and retain an independent copy.

Telephone inquiries related to this electronic decision should be directed to the Electronic Business Center at 1-866-217-9197.

PTO/SB/66 (03-09)
Approved for use through 03/31/2012. OMB 0651-0016
U.S. Patent and Trademark Office: U.S. DEPARTMENT OF COMMERCE
Under the Paperwork Reduction Act of 1995, no persons are required to respond to a collection of information unless it displays valid OMB control number.

PETITION TO ACCEPT UNINTENTIONALLY DELAYED PAYMENT OF MAINTENANCE FEE IN AN EXPIRED PATENT (37 CFR 1.378(c))

Patent Number	Issue Date (YYYY-MM-DD)	Application Number	Filing Date (YYYY-MM-DD)	Docket Number (if applicable)
6,844,180	2005-01-18	09/976,674	2001-10-12	70669/6197

CAUTION: Maintenance fee (and surcharge, if any) payment must correctly identify: (1) the patent number and (2) the application number of the actual U.S. application leading to issuance of that patent to ensure the fee(s) is/are associated with the correct patent. 37 CFR 1.366(c) and (d).

SMALL ENTITY
☐ Patentee claims, or has previously claimed, small entity status. See 37 CFR 1.27.

LOSS OF ENTITLEMENT TO SMALL ENTITY STATUS
☐ Patentee is no longer entitled to small entity status. See 37 CFR 1.27(g)

NOT Small Entity		Small Entity	
Fee	Code	Fee	Code
◉ 3 ½ year	(1551)	○ 3 ½ year	(2551)
○ 7 ½ year	(1552)	○ 7 ½ year	(2552)
○ 11 ½ year	(1553)	○ 11 ½ year	(2553)

SURCHARGE
The surcharge required by 37 CFR 1.20(i)(2) (Fee Code 1558) must be paid as a condition of accepting unintentionally delayed payment of the maintenance fee.

MAINTENANCE FEE (37 CFR 1.20(e)-(g))
The appropriate maintenance fee must be submitted with this petition.

STATEMENT
THE UNDERSIGNED CERTIFIES THAT THE DELAY IN PAYMENT OF THE MAINTENANCE FEE TO THIS PATENT WAS UNINTENTIONAL

PETITIONER(S) REQUEST THAT THE DELAYED PAYMENT OF THE MAINTENANCE FEE BE ACCEPTED AND THE PATENT REINSTATED

THIS PORTION MUST BE COMPLETED BY THE SIGNATORY OR SIGNATORIES

37 CFR 1.378(d) states: "Any petition under this section must be signed by an attorney or agent registered to practice before the Patent and Trademark Office, or by the patentee, the assignee, or other party in interest."

I certify, in accordance with 37 CFR 1.4(d)(4) that I am

◉ An attorney or agent registered to practice before the Patent and Trademark Office

○ A sole patentee

○ A joint patentee; I certify that I am authorized to sign this submission on behalf of all the other patentees.

○ A joint patentee; all of whom are signing this e-petition

○ The assignee of record of the entire interest

Patent Practitioner			
A signature of the applicant or representative is required in accordance with 37 CFR 1.33 and 10.18. Please see 37 CFR 1.4(d) for the form of the signature			
Signature	/James J. Schumann/	Date (YYYY-MM-DD)	2009-08-20
Name	James J. Schumann	Registration Number	20856

This collection of information is required by 37 CFR 1.378(c). The information is required to obtain or retain a benefit by the public which is to file (and by the USPTO to process) an application. Confidentiality is governed by 35 U.S.C. 122 and 37 CFR 1.11 and 1.14. This collection is estimated to take 1 hour to complete, including gathering, preparing, and submitting the completed application form to the USPTO. Time will vary depending upon the individual case. Any comments on the amount of time you require to complete this form and/ or suggestions for reducing this burden, should be sent to the Chief Information Officer, U.S. Patent and Trademark Office, U.S. Department of Commerce, P.O. Box 1450, Alexandria, VA 22313-1450. DO NOT SEND FEES OR COMPLETED FORMS TO THIS ADDRESS. **This form can only be used when in conjunction with EFS-Web. If this form is mailed to the USPTO, it may cause delays in reinstating the patent.**

Privacy Act Statement

The Privacy Act of 1974 (P.L. 93-579) requires that you be given certain information in connection with your submission of the attached form related to a patent application or patent. Accordingly, pursuant to the requirements of the Act, please be advised that: (1) the general authority for the collection of this information is 35 U.S.C. 2(b)(2); (2) furnishing of the information solicited is voluntary; and (3) the principal purpose for which the information is used by the U.S. Patent and Trademark Office is to process and/or examine your submission related to a patent application or patent. If you do not furnish the requested information, the U.S. Patent and Trademark Office may not be able to process and/or examine your submission, which may result in termination of proceedings or abandonment of the application or expiration of the patent.

The information provided by you in this form will be subject to the following routine uses:

1. The information on this form will be treated confidentially to the extent allowed under the Freedom of Information Act (5 U.S.C. 552) and the Privacy Act (5 U.S.C. 552a). Records from this system of records may be disclosed to the Department of Justice to determine whether the Freedom of Information Act requires disclosure of these records.

2. A record from this system of records may be disclosed, as a routine use, in the course of presenting evidence to a court, magistrate, or administrative tribunal, including disclosures to opposing counsel in the course of settlement negotiations.

3. A record in this system of records may be disclosed, as a routine use, to a Member of Congress submitting a request involving an individual, to whom the record pertains, when the individual has requested assistance from the Member with respect to the subject matter of the record.

4. A record in this system of records may be disclosed, as a routine use, to a contractor of the Agency having need for the information in order to perform a contract. Recipients of information shall be required to comply with the requirements of the Privacy Act of 1974, as amended, pursuant to 5 U.S.C. 552a(m).

5. A record related to an International Application filed under the Patent Cooperation Treaty in this system of records may be disclosed, as a routine use, to the International Bureau of the World Intellectual Property Organization, pursuant to the Patent Cooperation Treaty.

6. A record in this system of records may be disclosed, as a routine use, to another federal agency for purposes of National Security review (35 U.S.C. 181) and for review pursuant to the Atomic Energy Act (42 U.S.C. 218(c)).

7. A record from this system of records may be disclosed, as a routine use, to the Administrator, General Services, or his/her designee, during an inspection of records conducted by GSA as part of that agency's responsibility to recommend improvements in records management practices and programs, under authority of 44 U.S.C. 2904 and 2906. Such disclosure shall be made in accordance with the GSA regulations governing inspection of records for this purpose, and any other relevant (i.e., GSA or Commerce) directive. Such disclosure shall not be used to make determinations about individuals.

8. A record from this system of records may be disclosed, as a routine use, to the public after either publication of the application pursuant to 35 U.S.C. 122(b) or issuance of a patent pursuant to 35 U.S.C. 151. Further, a record may be disclosed, subject to the limitations of 37 CFR 1.14, as a routine use, to the public if the record was filed in an application which became abandoned or in which the proceedings were terminated and which application is referenced by either a published application, an application open to public inspections or an issued patent.

9. A record from this system of records may be disclosed, as a routine use, to a Federal, State, or local law enforcement agency, if the USPTO becomes aware of a violation or potential violation of law or regulation.

UNITED STATES PATENT AND TRADEMARK OFFICE

Commissioner for Patents
United States Patent and Trademark Office
P.O. Box 1450
Alexandria, VA 22313-1450
www.uspto.gov

SWANSON & BRATSCHUN, L.L.C.
1745 SHEA CENTER DRIVE, SUITE 330
HIGHLANDS RANCH, CO 80129

COPY MAILED

APR 2 3 2004

OFFICE OF PETITIONS

ON PETITION

In re Application of :
Timothy Allan Constantine :
Application No. 09/976,678 :
Filed: October 12, 2001 :
Attorney Docket No. CH2M.13

This is a decision on the petition, filed April 15, 2004, under 37 CFR 1.313(c)(2) to withdraw the above-identified application from issue after payment of the issue fee. See 1233 *Official Gazette* 54 (April 11, 2000).

The petition is **DISMISSED as moot**.

Unfortunately, the petition did not reach the appropriate official for a decision until April 22, 2004, which is after the above-identified application issued as U.S. Patent No. 6,723,244. Any inconvenience caused petitioners is regretted.

The information disclosure statement (IDS) has been placed in the file of the above-identified application without further consideration. See 37 CFR 1.97(*i*).

The Request for Continued Examination (RCE) is considered an improper submission under 37 CFR 1.114 and will not be further processed.

Thereafter, the file of the above-identified application will be returned to Files Repository.

Telephone inquiries should be directed to Irvin Dingle at (703) 306-5684.

Irvin Dingle
Petitions Examiner
Office of Petitions
Office of the Deputy Commissioner
for Patent Examination Policy

UNITED STATES PATENT AND TRADEMARK OFFICE

COMMISSIONER FOR PATENTS
UNITED STATES PATENT AND TRADEMARK OFFICE
WASHINGTON, D.C. 20231
www.uspto.gov

Paper No. 6

COPY MAILED

JUN 2 0 2002

OFFICE OF PETITIONS

FENWICK & WEST LLP
TWO PALO ALTO SQUARE
PALO ALTO, CA 94306

In re Application of
Hastings, et al.
Application No. 09/976,686
Filed: October 11, 2001
Atty. Dkt. No. 22407-05490
For: FAIL SAFE RECOVERY

DECISION ACCORDING STATUS
UNDER 37 CFR 1.47(a)

This is in response to the petition under 37 CFR 1.47(a), filed March 25, 2002.

The petition is GRANTED.

Petitioner has shown that the non-signing inventor has refused to join in the filing of the above-identified application after having been presented with the application papers. Specifically, the declaration of Brian M. Hoffman sufficiently establishes that the inventor received the application papers and refused to execute the declaration.

The above-identified application and papers have been reviewed and found in compliance with 37 CFR 1.47(a). This application is hereby accorded Rule 1.47(a) status.

As provided in Rule 1.47(c), this Office will forward notice of this application's filing to the non-signing inventor at the address given in the petition. Notice of the filing of this application will also be published in the Official Gazette.

After this decision is mailed, the above-identified application will be returned to the Office of Initial Patent Examination for further processing.

Telephone inquiries regarding this decision should be directed to Petitions Attorney Alesia M. Brown at (703) 305-0310.

Alesia M Brown for/

Beverly M. Flanagan
Supervisory Petitions Examiner
Office of Petitions
Office of the Deputy Commissioner
for Patent Examination Policy

UNITED STATES PATENT AND TRADEMARK OFFICE

COMMISSIONER FOR PATENTS
UNITED STATES PATENT AND TRADEMARK OFFICE
WASHINGTON, D.C. 20231
www.uspto.gov

MAIL

Paper No. 11

JUL 2 9 2003

DIRECTOR OFFICE
TECHNOLOGY CENTER 2100

FENWICK & WEST LLP
Silicon Valley Center
801California Street
Mountain View, CA 94041

In re Application of:
Jeffrey S. Hastings, et al.
Application No.: 09/976,686
Filed: October 11, 2001
For: FAIL SAFE RECOVERY

DECISION ON REQUEST FOR WITHDRAWAL AS ATTORNEY

This is a decision on the Request For Withdrawal As Attorney Under 37 CFR § 1. 36 and 0.40(c) filed May 9, 2003.

A Revocation And Substitution Of Power Of Attorney Under 37 CFR § 1. 36 was filed on June 12, 2003. The Power Of Attorney revoked all prior Powers Of Attorney and appointed Bradley J. Hubert as the attorney of record of the instant application. The Power Of Attorney of June 12, 2003 was accepted. Accordingly, all communications from the U.S. Patent and Trademark Office to applicant are to be conducted by Bradley J. Hulbert, et al.

For the above stated reasons, the request is **DISMISSED AS MOOT**.

No further communication to you regarding this application will be made.

For Vincent N. Trans
Special Program Examiner
Technology Center 2100
Computer Architecture and Software
(703) 305-9750

cc: Bradley J. Hulbert
McDonnell, Boehnen, Hulbert & Berghoff
300 South Wacker Drive
Chicago, IL 60606-6709

UNITED STATES PATENT AND TRADEMARK OFFICE

Commissioner for Patents
United States Patent and Trademark Office
P.O. Box 1450
Alexandria, VA 22313-1450
www.uspto.gov

KNOBBE, MARTENS, OLSON & BEAR, LLP
2040 MAIN STREET, FOURTEENTH FLOOR
IRVINE, CA 92614

COPY MAILED

JUL 1 6 2004

OFFICE OF PETITIONS

In re Application of	:	
Virtanen	:	
Application No. 09/976,718	:	ON PETITION
Filed: October 13, 2001	:	
Attorney Docket No. NAGACO.11CPCCCD	:	

This decision concerns the May 10, 2004 petition under 37 CFR 1.137(b).

The petition is **GRANTED.**

The application became abandoned on October 17, 2003 for failure to timely respond to the July 16, 2003 non-final Office Action.

The instant petition encloses an amendment and the $1,330 petition fee, and states in essence that the entire delay in responding to this non-final Office action from the due date until the filing of a grantable §1.137(b) petition was unintentional. The petition is thus granted.

In addition, the petition encloses a $950 payment intended for a 3-month extension of time. However, an extension of time under 37 CFR 1.136 may only be obtained prior to expiration of the maximum extendable reply period.[1] The request for extension of time submitted with the instant petition is not applicable, in that, it is filed subsequent to the maximum extendable reply period, i.e., subsequent to January 16, 2004. Accordingly, the $950 payment has been credited to Deposit Account No. 11-1410 as authorized in the petition.

Finally, the petition uses a correspondence address different from that indicated in the USPTO record for this application. All future correspondence on this application will be mailed to the current correspondence-address-of-record unless the USPTO is properly instructed otherwise.

The application file is being returned to Technology Center 1600 for further examination.

Telephone inquiries should be directed to the undersigned at (703) 308-0763.

RC Tang
Petitions Attorney
Office of Petitions

---

[1] See In re Application of S., 8 U.S.P.Q.2d 1630, 1631 (Comm'r Pats. 1988).

UNITED STATES PATENT AND TRADEMARK OFFICE

Commissioner for Patents
United States Patent and Trademark Office
P.O. Box 1450
Alexandria, VA 22313-1450
www.uspto.gov

SECOND SIGHT MEDICAL PRODUCTS, INC.
12744 SAN FERNANDO ROAD
BUILDING 3
SYLMAR, CA 91342

COPY MAILED

AUG 07 2006

OFFICE OF PETITIONS

In re Application of :
Greenberg, et al. :
Application No. 09/976,799 :
Filed: October 12, 2001 :
Attorney Docket No. S100-DIV1 :

ON PETITION

This is a decision on the petition under 37 CFR 1.137(b), filed May 3, 2006, to revive the above-identified application.

The petition is **GRANTED**.

This application became abandoned for failure to timely file a proper reply to the non-final Office action mailed May 12, 2003. A Notice of Non-Compliant amendment was mailed October 29, 2003, which set a one (1) month period for reply. Accordingly, this application became abandoned on November 30, 2003. A Notice of Abandonment was mailed on May 18, 2004.

It is not apparent whether the statement of unintentional delay was signed by a person who would have been in a position of knowing that the entire delay in filing the required reply from the due date for the reply until the filing of a grantable petition pursuant to 37 CFR 1.137(b) was unintentional. Nevertheless, in accordance with 37 CFR 10.18, the statement is accepted as constituting a certification of unintentional delay. However, in the event that petitioner has no knowledge that the delay was unintentional, petitioner must make such an inquiry to ascertain that, in fact, the delay was unintentional. If petitioner discovers that the delay was intentional, petitioner must so notify the Office.

The file is being forwarded to Technology Center 3700 for review of the amendment, filed May 3, 2006, *in due course*.

Telephone inquiries concerning this matter may be directed to the undersigned at (571) 272-3228.

Edward J. Tannouse
Petitions Attorney
Office of Petitions/Patent
Office of the Deputy Commissioner
for Patent Examination Policy

UNITED STATES PATENT AND TRADEMARK OFFICE

Commissioner for Patents
United States Patent and Trademark Office
P.O. Box 1450
Alexandria, VA 22313-1450
www.uspto.gov

KIM R JESSUM
MORGAN LEWIS & BOCKIUS LLP
1701 MARKET ST
PHILADELPHIA PA 19103

COPY MAILED

JUN 20 2005

OFFICE OF PETITIONS

In re Application of	:	
Polyak, et al.	:	
Application No. 09/976,804	:	ON PETITION
Filed: October 12, 2001	:	
Attorney Docket No. 053137-5001-01	:	

This is a decision on the petition under 37 CFR 1.137(b), filed May 13, 2005.

The petition under 37 CFR 1.137(b) is **GRANTED**.

The above-identified application became abandoned for failure to timely file a response to the non-final Office action mailed March 15, 2004. This Office action set a shortened statutory period for reply of three months. No extensions of time under 37 CFR 1.136(a) were obtained. Accordingly, the above-identified application became abandoned on June 16, 2004. A Notice of Abandonment was mailed on December 2, 2004.

Petitioner has paid the petition fee, submitted the required reply in the form of an amendment, and made the proper statement of unintentional delay.

Pursuant to 37 CFR 1.136, an extension of time must be filed prior to the expiration of the maximum period obtainable for reply to avoid abandonment. Accordingly, since the $510 extension of time fee submitted with the petition on May 13, 2005 was subsequent to the maximum period obtainable for reply (September 15, 2004), this fee has been refunded to petitioner's Deposit Account 23-2185.

The file does not indicate a change of address has been submitted, although the address given on the petition differs from the address of record. If appropriate, a change of address should be filed in accordance with MPEP 601.03. A courtesy copy of this decision is being mailed to the address given on the petition; however, the Office will mail all future correspondence solely to the address of record.

The application file is being forwarded to Group Art Unit 1651 for consideration of the amendment filed May 13, 2005.

Telephone inquiries concerning this decision should be directed to the undersigned at (571)272-3207.

Cliff Congo
Petitions Attorney
Office of Petitions

cc: Charles R. Wolfe, Jr.
Blank Rome LLP
600 New Hampshire Ave, NW
Washington DC 20037

UNITED STATES PATENT AND TRADEMARK OFFICE

Commissioner for Patents
United States Patent and Trademark Office
P.O. Box 1450
Alexandria, VA 22313-1450
www.uspto.gov

Paper No. 14

Blank Rome LLP
600 New Hampshire Avenue, NW
Washington, DC 20037

COPY MAILED

JUN 06 2005

OFFICE OF PETITIONS

In re Application of :
Polyak et al. :
Application No. 09/976,805 : DECISION ON PETITION
Filed: October 12, 2001 :
Attorney Docket No. 122790-00101.2 :

This is a decision on the petition under 37 CFR 1.137(b), filed May 13, 2005, to revive the above-identified application.

The petition is **GRANTED**.

This application became abandoned for failure to reply timely to the nonfinal Office action mailed May 1, 2003, which set a three-month shortened statutory period to respond. Petitioner did not obtain any proper extensions of time pursuant to 37 CFR 1.136(a). Accordingly, this application became abandoned on August 2, 2003. A Notice of Abandonment was mailed on December 12, 2003.

Petitioner has met the requirements to revive the above-identified application pursuant to 37 CFR 1.137(b). Petitioner submitted the required reply in the form of an amendment, paid the petition fee, and made the proper statement of unintentional delay.

Petitioner submitted a request for an extension of time for response within the third month and a $510.00 fee with the present petition. Pursuant to 37 CFR 1.136, petitioner may not extend the period of time for response beyond the maximum time period set by statute. Accordingly, the request for an extension of time for response is untimely and inappropriate. The $510.00 fee will be refunded to Deposit Account No. 23-2185.

There is no indication that the practitioner herein was ever empowered to prosecute the application. Moreover, the application file does not indicate a change of address has been filed in this case, although the address given on the petition differs from the address of record. If the practitioner desires to receive future correspondence regarding this application, the appropriate power of attorney documentation and a change of correspondence address must be submitted. Correspondence will continue to be sent to the address of record unless the Office is informed otherwise.

The application file is being forwarded to Technology Center Art Unit 1651.

Telephone inquiries concerning this matter may be directed to the undersigned at (571) 272-3211.

Christina Tartera Donnell

Christina Tartera Donnell
Senior Petitions Attorney
Office of Petitions

Cc: Morgan, Lewis & Bockius LLP
1701 Market Street
Philadelphia PA 19103

UNITED STATES PATENT AND TRADEMARK OFFICE

Commissioner for Patents
United States Patent and Trademark Office
P.O. Box 1450
Alexandria, VA 22313-1450
www.uspto.gov

ANTOINETTE M. TEASE
P. O. BOX 51016
BILLINGS MT 59105

COPY MAILED

MAR 19 2007

OFFICE OF PETITIONS

In re Application of	:	
Stull et al.	:	DECISION ON PETITION
Application No. 09/976813	:	
Filing Date: 10/12/2001	:	
Attorney Docket Number:	:	
010809-0003-999	:	

This is a decision on the "PETITION FOR REVIVAL OF AN APPLICATION FOR PATENT ABANDONED FOR FAILURE TO NOTIFY THE OFFICE OF A FOREIGN OR INTERNATIONAL FILING (37 CFR 1.137(f)) filed November 14, 2006.

The petition is **GRANTED**.

Petitioner states that the instant nonprovisional application is the subject of a foreign or international application filed on October 8, 2002. However, the US Patent and Trademark Office was unintentionally not notified of this filing within 45 days subsequent to the filing of the foreign or international application.

In view of the above, this application became abandoned pursuant to 35 U.S.C. 122(b)(2)(B)(iii) and 37 CFR 1.213(c) for failure to timely notify the Office of the filing of an application in a foreign country, or under a multilateral international agreement, that requires publication of applications 18 months after filing.

A petition under 37 CFR 1.137(f) must be accompanied by:

(1) the reply, which is met by the notification of such filing in a foreign country or under a multinational treaty;

(2) the petition fee as set forth in 37 CFR 1.17(m); and

(3) a statement that the entire delay in filing the required reply from the due date of the reply until the filing of a grantable petition was unintentional.

The instant petition has been found to be in compliance with 37 CFR 1.137(f). Accordingly, the failure to timely notify the Office of a foreign or international filing within 45 days after the date

of filing of such foreign or international application as provided by 35 U.S.C. 122(b)(2)(B)(iii) and 37 CFR 1.213(c) is accepted as having been unintentionally delayed.

The previous Request and Certification under 35 U.S.C. 122(b)(2)(B)(i) has been rescinded. A Notice Regarding Rescission of Nonpublication Request indicating the projected publication date accompanies this decision on petition.

The application will be referred to Technology Center AU 2142 for continued examination in due course.

Telephone inquiries regarding this decision should be directed to the undersigned at (571) 272-3232.

Derek L. Woods
Attorney
Office of Petitions

Attachment: Communication Regarding Rescission of Nonpublication Request and/or Notice of Foreign Filing

UNITED STATES PATENT AND TRADEMARK OFFICE

UNITED STATES DEPARTMENT OF COMMERCE
United States Patent and Trademark Office
Address: COMMISSIONER FOR PATENTS
P.O. Box 1450
Alexandria, Virginia 22313-1450
www.uspto.gov

APPLICATION NUMBER	FILING/RECEIPT DATE	FIRST NAMED APPLICANT	ATTY. DOCKET NO.
09/976,813	10/12/2001	Edward Larue Stull	010809-0003-999

CONFIRMATION NO. 4122

45766
ANTOINETTE M. TEASE
P. O. BOX 51016
BILLINGS, MT 59105

Date Mailed: 03/19/2007

Communication Regarding Rescission Of Nonpublication Request and/or Notice of Foreign Filing

Applicant's rescission of the previously-filed nonpublication request and/or notice of foreign filing is acknowledged. The paper has been reflected in the Patent and Trademark Office's (USPTO's) computer records so that the earliest possible projected publication date can be assigned.

The projected publication date is 06/28/2007.

If applicant rescinded the nonpublication request before or on the date of "foreign filing,"[1] then no notice of foreign filing is required.

If applicant foreign filed the application after filing the above application and before filing the rescission, and the rescission did not also include a notice of foreign filing, then a notice of foreign filing (not merely a rescission) is required to be filed within 45 days of the date of foreign filing. See 35 U.S.C. § 122(b)(2)(B)(iii), and Clarification of the United States Patent and Trademark Office's Interpretation of the Provisions of 35 U.S.C. § 122(b)(2)(B)(ii)-(iv), 1272 Off. Gaz. Pat. Office 22 (July 1, 2003).

If a notice of foreign filing is required and is not filed within 45 days of the date of foreign filing, then the application becomes abandoned pursuant to 35 U.S.C. § 122(b)(2)(B)(iii). In this situation, applicant should either file a petition to revive or notify the Office that the application is abandoned. See 37 CFR 1.137(f). Any such petition to revive will be forwarded to the Office of Petitions for a decision. Note that the filing of the petition will not operate to stay any period of reply that may be running against the application.

Questions regarding petitions to revive should be directed to the Office of Petitions at (571) 272-3282. Questions regarding publications of patent applications should be directed to the patent application publication hotline at (703) 605-4283 or by e-mail pgpub@uspto.gov.

[1] Note, for purpose of this notice, that "foreign filing" means "filing an application directed to the same invention in another country, or under a multilateral international agreement, that requires publication of applications 18 months after filing".

UNITED STATES PATENT AND TRADEMARK OFFICE

UNITED STATES DEPARTMENT OF COMMERCE
United States Patent and Trademark Office
Address: COMMISSIONER FOR PATENTS
P.O. Box 1450
Alexandria, Virginia 22313-1450
www.uspto.gov

APPLICATION NUMBER	FILING/RECEIPT DATE	FIRST NAMED APPLICANT	ATTY. DOCKET NO.
09/976,813	10/12/2001	Edward Larue Stull	010809-0003-999

CONFIRMATION NO. 4122

45766
ANTOINETTE M. TEASE
P. O. BOX 51016
BILLINGS, MT 59105

Date Mailed: 03/19/2007

Communication Regarding Rescission Of Nonpublication Request and/or Notice of Foreign Filing

Applicant's rescission of the previously-filed nonpublication request and/or notice of foreign filing is acknowledged. The paper has been reflected in the Patent and Trademark Office's (USPTO's) computer records so that the earliest possible projected publication date can be assigned.

The projected publication date is 06/28/2007.

If applicant rescinded the nonpublication request before or on the date of "foreign filing,"[1] then no notice of foreign filing is required.

If applicant foreign filed the application after filing the above application and before filing the rescission, and the rescission did not also include a notice of foreign filing, then a notice of foreign filing (not merely a rescission) is required to be filed within 45 days of the date of foreign filing. See 35 U.S.C. § 122(b)(2)(B)(iii), and Clarification of the United States Patent and Trademark Office's Interpretation of the Provisions of 35 U.S.C. § 122(b)(2)(B)(ii)-(iv), 1272 Off. Gaz. Pat. Office 22 (July 1, 2003).

If a notice of foreign filing is required and is not filed within 45 days of the date of foreign filing, then the application becomes abandoned pursuant to 35 U.S.C. § 122(b)(2)(B)(iii). In this situation, applicant should either file a petition to revive or notify the Office that the application is abandoned. See 37 CFR 1.137(f). Any such petition to revive will be forwarded to the Office of Petitions for a decision. Note that the filing of the petition will not operate to stay any period of reply that may be running against the application.

Questions regarding petitions to revive should be directed to the Office of Petitions at (571) 272-3282. Questions regarding publications of patent applications should be directed to the patent application publication hotline at (703) 605-4283 or by e-mail pgpub@uspto.gov.

[1] Note, for purpose of this notice, that "foreign filing" means "filing an application directed to the same invention in another country, or under a multilateral international agreement, that requires publication of applications 18 months after filing".

UNITED STATES PATENT AND TRADEMARK OFFICE

COMMISSIONER FOR PATENTS
UNITED STATES PATENT AND TRADEMARK OFFICE
P.O. BOX 1450
ALEXANDRIA, VA 22313-1450
www.uspto.gov

Paper No. 10

Thomas A. O'Rourke
Wyatt Gerber Meller & O'Rourke
99 Park Avenue
New York, NY 10016

COPY MAILED
FEB 05 2004
OFFICE OF PETITIONS

In re Application of
Ornella Flore
Application No. 09/976,838
Filed: October 15, 2001
Attorney Docket No. 1712

ON PETITION

This is a decision on the petition under 37 CFR 1.137(b), filed January 28, 2004, to revive the above-identified application.

The petition is Granted.

The above-identified application became abandoned for failure to reply in a timely manner to the non-final Office action mailed October 2, 2002, which set a shortened statutory period for reply of three (3) months. No extensions of time under the provisions of 37 CFR 1.136(a) were obtained. Accordingly, the above-identified application became abandoned on January 3, 2003.

The file does not indicate a change of address has been submitted, although the address given on the petition differs from the address of record. If appropriate, a change of address should be filed in accordance with MPEP 601.03. A courtesy copy of this decision is being mailed to the address given on the petition; however, the Office will mail all future correspondence solely to the address of record.

The application file is being forwarded to Technology Center AU 1623 for further processing.

Telephone inquiries concerning this decision should be directed to Latrice Bond at (703) 308-6911.

Latrice Bond

Latrice Bond
Paralegal Specialist
Office of Petitions
Office of the Deputy Commissioner
For Patent Examination Policy

UNITED STATES PATENT AND TRADEMARK OFFICE

UNDER SECRETARY OF COMMERCE FOR INTELLECTUAL PROPERTY AND
DIRECTOR OF THE UNITED STATES PATENT AND TRADEMARK OFFICE
WASHINGTON, DC 20231
www.uspto.gov

UR

PAPER NO. 3

MAR 15 2002

In re Application of William J. Berry Serial Number: 09/976,892 Filed: October 15, 2001 For: CONTROL VALVE AND WATER PURIFICATION METHOD	: : : : : :	DECISION ON PETITION UNDER M.P.E.P. 708.02(IV)

This is in response to the petition filed October 15, 2001, requesting that the above-identified application be granted Special Status under Section 708.02 (IV) of the MPEP and 37 CFR 1.102(c).

The petition has been considered and found to comply with the requirements set forth under the above-noted section. Accordingly, the petition is granted.

The petition is GRANTED.

Richard V. Fisher

Richard V. Fisher, Director
Technology Center 1700
Chemical and Materials Engineering

Walter L. Beavers
326 South Eugene Street
Greensboro, NC 27401

UNITED STATES PATENT AND TRADEMARK OFFICE

Commissioner for Patents
United States Patent and Trademark Office
P.O. Box 1450
Alexandria, VA 22313-1450
www.uspto.gov

ABELMAN, FRAYNE & SCHWAB
10th Floor
666 Third Ave.
New York NY 10017

COPY MAILED

FEB 16 2006

OFFICE OF PETITIONS

ON PETITION

In re Application of	:	
Isaac BENTWICH	:	
Application No. 09/976,911	:	
Filed: October 12, 2001	:	
Attorney Docket No. 205,356	:	

This is a decision on the petition under 37 CFR 1.137(b), filed August 29, 2005, to revive the above-identified application.

The petition is **GRANTED**.

The above-identified application became abandoned for failure to file a proper reply in a timely manner to the Notice to Comply with Requirements for Patent Applications Containing Nucleotide Sequence and/or Amino Acid Sequence Disclosures mailed November 30, 2001, which set a shortened period for reply of two (2) months. No extensions of time under the provisions of 37 CFR 1.136(a) were obtained. Accordingly, the above-identified application became abandoned on January 31, 2002.

The petition satisfies the conditions for revival pursuant to the provisions of 37 CFR 1.137(b) in that (1) the reply in the form of an initial computer readable form (CRF), an initial paper or compact disc copy of the "Sequence Listing", as well as an amendment directing its entry into the specification, and a statement in accordance with 37 CFR 1.821(e); (2) the petition fee of $750; and (3) the required statement of unintentional delay have been received. Accordingly, the reply to the Notice to Comply with Requirements for Patent Applications Containing Nucleotide Sequence and/or Amino Acid Sequence Disclosures mailed November 30, 2001 is accepted as having been unintentionally delayed.

It is not apparent whether the person signing the statement of unintentional delay was in a position to have firsthand knowledge of the facts and circumstances of the delay at issue. Nevertheless, such statement is being treated as having been made as the result of a reasonable inquiry into the facts and circumstances of such delay. See 37 CFR 10.18(b) and Changes to

Application No. 09/976,911

Patent Practice and Procedure; Final rule Notice, 62 Fed. Reg. 53131, 53178 (October 10, 1997), 1203 Off. Gaz. Pat. Office 63, 103 (October 21, 1997). In the event that such an inquiry has not been made, petitioner must make such an inquiry. If such inquiry results in the discovery that it is not correct that the entire delay in filing the required reply from the due date for the reply until the filing of a grantable petition pursuant of 37 CFR 1.137(b) was unintentional, petitioner must notify the Office.

The file does not indicate a change of address has been submitted, although the address given on the petition differs from the address of record. If appropriate, a change of address should be filed in accordance with MPP 601.03. A courtesy copy of this decision is being mailed to the address given on the petition; however, the office will mail all future correspondence solely to the address of record

Telephone inquiries concerning this decision should be directed to David A. Bucci at (571) 272-7099.

The application is being referred to the Office of Initial Patent Examination.

David Bucci
Petitions Examiner
Office of Petitions

Cc: Teddy C. Scott, Jr, Ph.D.
Howrey LLP
2941 Fairview Park Drive, Suite 200
Falls Church, VA 22042-9922

UNITED STATES PATENT AND TRADEMARK OFFICE

COMMISSIONER FOR PATENTS
UNITED STATES PATENT AND TRADEMARK OFFICE
P.O. BOX 1450
ALEXANDRIA, VA 22313-1450
www.uspto.gov

Paper No. 6

Gerald F Swiss
Burns Doane Swecker & Mathis LLP
PO Box 1404
Alexandria, VA 22313-1404

COPY MAILED

SEP 1 5 2003

OFFICE OF PETITIONS

In re Application of Eric Mayhew, Andrew Janoff, Imran Ahmad and Suresh Bhatia Application No. 09/976,936 Filed: October 11, 2001 Attorney Docket No. 033388-371	DECISION GRANTING STATUS UNDER 37 CFR 1.47(a)

This is in response to the reissue petition filed July 1, 2002 and supplemented on July 31, 2002 under 37 CFR. §1.47(a).

The petition is GRANTED.

Petitioner has shown that non-signing inventor Janoff has refused to join in the filing of the above-identified application after having been presented with the reissue application papers. Specifically, the declaration of facts attest a copy of the reissue application was sent to non-signing inventor Janoff's last known address on two separate occasions. Petitioner has provided evidence that shows the application papers were received by non-signing inventor. The non-signing inventor's failure to respond to the application sufficiently establishes that he refuses to execute the application papers.

The above-identified application and papers have been reviewed and found in compliance with 37 CFR 1.47(a). This application is hereby accorded Rule 1.47(a) status.

As provided in Rule 1.47(c), this Office will forward notice of this application's filing to the non-signing inventor at the address given in the petition. Notice of the filing of this reissue application will also be published in the Official Gazette.

This application is being forwarded to the Office of Initial Patent Examination for further processing.

Telephone inquiries related to this decision may be directed to the undersigned at (703) 306-0251.

Charlema R. Grant
Petitions Attorney
Office of Petitions

UNITED STATES PATENT AND TRADEMARK OFFICE

COMMISSIONER FOR PATENTS
UNITED STATES PATENT AND TRADEMARK OFFICE
P.O. BOX 1450
ALEXANDRIA, VA 22313-1450
www.uspto.gov

Andrew S. Janoff
560 Countess Drive
Yardley, PA 19067

COPY MAILED

SEP 1 5 2003

OFFICE OF PETITIONS

LETTER

In re Application of
Eric Mayhew, Andrew Janoff, Imran Ahmad and Suresh Bhatia
Application No. 09/976,936
Filed: October 11, 2001
Attorney Docket No. 033388-371

Dear Mr. Janoff:

You are named as a co-inventor In the above-identified United States reissue patent application filed under the provisions of 35 U.S.C. 116 (United States Code) and 37 C.F.R. § 1.47(a), Rules of Practice In Patent Cases. Should a patent be granted on the application you will be designated therein as a joint inventor.

As a named inventor you are entitled to inspect any paper In the file wrapper of the application, order copies of all or any part thereof (at a prepaid cost as per 37 C.F.R. § 1.19) or make your position of record In the application. Alternatively, you may arrange to do any of the preceding through a registered patent attorney or agent presenting written authorization from you. If you care to join the application, counsel of record (see below) would presumably assist you. Joining In the application would entail the filing of an appropriate oath or declaration by you pursuant to 37 C.F.R. § 1.63.

Telephone inquiries regarding this communication should be directed to Petitions Attorney Charlema R. Grant at (703) 306-0251. Requests for information regarding your application should be directed to the File Information Unit at (703) 308-2733. Information regarding how to pay for and order a copy of the application, or a specific paper In the application, should be directed to Certification Division at (703) 308-9726 or 1-800-972-6382 (outside the Washington D.C. area).

Charlema R. Grant

Charlema R. Grant
Petitions Attorney
Office of Petitions

Teresa Stanek Rea
Gerald F Swiss
Burns Doane Swecker & Mathis LLP
PO Box 1404
Alexandria, VA 22313-1404

UNITED STATES PATENT AND TRADEMARK OFFICE

COMMISSIONER FOR PATENTS
UNITED STATES PATENT AND TRADEMARK OFFICE
P.O. BOX 1450
ALEXANDRIA, VA 22313-1450
www.uspto.gov

Paper No. 31

CHOATE, HALL & STEWART
EXCHANGE PLACE
53 STATE STREET
BOSTON, MA 02109

COPY MAILED

JUN 2 1 2004

OFFICE OF PETITIONS

In re Application of
Michael T. Caplan, et al. :
Application No. 09/976,963 : ON PETITION
Filed: October 12, 2001 :
Attorney Docket No. 2002834-0115 :

This is a decision in response to a petition under 37 CFR 1.313(c)(2) to withdraw the above-identified application from issue after payment of the issue fee filed June 18, 2004.

The petition is GRANTED.

The above-identified application is withdrawn from issue for consideration of a submission under 37 CFR 1.114 (request for continued examination). See 37 CFR 1.313(c)(2).

Petitioner is advised that the issue fee paid January 20, 2004, in the above-identified application cannot be refunded. If, however, the above-identified application is again allowed, petitioner may request that it be applied towards the issue fee required by the new Notice of Allowance. [1]

Telephone inquiries relating to this decision should be directed to the undersigned at (703) 305-9220.

After the application is received in the Office of Petitions, the file will be forwarded to Technology Center AU 1614 for further processing of the request for continued examination under 37 CFR 1.114.

Sherry D. Brinkley
Petitions Examiner
Office of Petitions
Office of the Deputy Commissioner
for Patent Examination Policy

[1]The request to apply the issue fee to the new Notice may be satisfied by completing and returning the new Issue Fee Transmittal Form PTOL-85(b), which includes the following language thereon: "Commissioner for Patents is requested to apply the Issue Fee and Publication Fee (if any) or re-apply any previously paid issue fee to the application identified above." Petitioner is advised that, whether a fee is indicated as being due or not, the Issue Fee Transmittal Form **must** be completed and timely submitted to avoid abandonment. Note the language in bold text on the first page of the Notice of Allowance and Fee(s) Due (PTOL-85).

UNITED STATES PATENT AND TRADEMARK OFFICE

Commissioner for Patents
United States Patent and Trademark Office
P.O. Box 1450
Alexandria, VA 22313-1450
www.uspto.gov

Paper No. 22

COPY MAILED

JUN 2 1 2004

OFFICE OF PETITIONS

Date : June 21, 2004

TO : Director, Office of Patent Publication

FROM : Office of the Deputy Commissioner for Patent Examination Policy

SUBJECT : Withdrawal from Issue of

Applicant(s) : Michael T. Caplan, et al.
Application No. : 09/976,963
Filed : October 12, 2001

The above-identified application has been assigned Patent No. 6,753,343 and an issue date of June 22, 2004.

It is hereby directed that this application be withdrawn from issue at the request of the applicant.

Do not refund the issue fee.

The following erratum should be published in the Official Gazette if the above-identified application is published in the OG of June 22, 2004:

> "All reference to Patent No. 6,753,343 to MICHAEL T. CAPLAN, ET AL. of CONNECTICUT for CONDUCTANCE OF IMPROPERLY FOLDED PROTEINS THROUGH THE SECRETORY PATHWAY AND RELATED METHODS FOR TREATING DISEASE appearing in the Official Gazette of June 22, 2004, should be deleted since no patent was granted."

Sherry D. Brinkley
Petitions Examiner
Office of Petitions
Office of the Deputy Commissioner
for Patent Examination Policy

cc: Geraldine Dozier, Crystal Park 3-44l (FAX-306-2737)
Deneise Boyd, Crystal Park 2, Suite l100 (FAX-308-5413)
Mary Louise McAskill, Crystal Park 3-910 (FAX 305-4372)
Niomi Farmer, Crystal Park 3-9l0 (FAX-305-4372)
Mary E. Johnson (Cookie), P/OCS, CM1-6D07
Duane K.Davis, P/OCS, CM1-6A07
Tamara K. Greene, PK3-910

UNITED STATES PATENT AND TRADEMARK OFFICE

Commissioner for Patents
United States Patent and Trademark Office
Washington, D.C. 20231
www.uspto.gov

Paper No. 11

GIFFORD KRASS GROH SPRINKLE
ANDERSON & CITKOWSKI PC
280 N OLD WOODWARD
SUITE 400
BIRMINGHAM MI 48009

COPY MAILED

OCT 0 2 2002

OFFICE OF PETITIONS

In Application of Mault, et al. Application No. 09/976,967 Filed: October 12, 2001 Attorney Docket No. MJA-23702/03 Title: SYSTEM AND METHOD OF INTEGRATED CALORIE MANAGEMENT	DECISION ACCORDING STATUS UNDER 37 CFR 1.47(a)

This is in response to the petition under 37 CFR 1.47(a), filed March 12, 2002 (copy resupplied via facsimile transmission on July 2, 2002).

The petition under 37 CFR 1.47(a) is **GRANTED**.

The above-identified application was filed on October 12, 2001. On November 15, 2001, applicant was mailed a "Notice to File Missing Parts of Nonprovisional Application - Filing Date Granted," requiring, *inter alia*, an executed oath or declaration (and a surcharge for its late filing). This Notice set a two-month period for reply.

In reply, applicant filed the instant petition, and paid the surcharge for late filing of the declaration. To make timely this reply, applicant obtained a two month extension of time.

A grantable petition under 37 CFR 1.47(a) requires: (1) proof that the non-signing inventor cannot be reached after diligent effort or refuses to sign the oath or declaration after having been presented with the application papers (specification, claims, drawings, oath or declaration); (2) an acceptable oath or declaration in compliance with 37 CFR 1.63; (3) the petition fee; and (4) a statement of the last known address of the non-signing inventor.

Accompanying the petition were, *inter alia*,: (1) a declaration executed by inventors James Mault, Nicholas Anderson, and Rob Pledger, but with the signature block for inventor John Sanderson left blank; and (2) a copy of a letter to Sanderson dated March 1, 2002, transmitting the application papers. According to the petition, no response from Sanderson has yet to be received.

The declaration filed October 12, 2001 and the petition have been reviewed and found to be in compliance with 37 CFR 1.47(a). This application is hereby accorded Rule 1.47(a) status.

As provided in 37 CFR 1.47(c), this Office will forward notice of this application's filing to the non-signing inventor at the address given in the petition. Notice of the filing of this application will also be published in the Official Gazette.

The application file is being forwarded to Technology Center 3600 for processing.

Telephone inquiries regarding this decision should be directed to Petitions Attorney Cliff Congo at (703) 305-0272.

for H Wood

for Beverly M. Flanagan
Supervisory Petitions Examiner
Office of Petitions
Office of the Deputy Commissioner
for Patent Examination Policy

UNITED STATES PATENT AND TRADEMARK OFFICE

Commissioner for Patents
United States Patent and Trademark Office
Washington, D.C. 20231
www.uspto.gov

JOHN SANDERSON
9 ISLANDVIEW
IRVINE CA 92604-3601

COPY MAILED

OCT 0 2 2002

OFFICE OF PETITIONS

In re Application of :
Mault, et al. :
Application No. 09/976,967 :
Filed: October 12, 2001 : LETTER
Title: SYSTEM AND METHOD OF INTEGRATED :
CALORIE MANAGEMENT

Dear Mr. Sanderson:

You are named as a joint inventor in the above-identified United States patent application filed under the provisions of 35 USC 116 and 37 CFR 1.47(a), Rules of Practice in Patent Cases. Should a patent be granted on the application you will be designated therein as a joint inventor.

As a named inventor you are entitled to inspect any paper in the file wrapper of the application, order copies of all or any part thereof (at a prepaid cost per 37 CFR 1.19) or make your position of record in the application. Alternatively, you may arrange to do any of the preceding through a registered patent attorney or agent presenting written authorization from you. If you care to join the application, agent of record (see below) would presumably assist you. Joining in the application would entail the filing of an appropriate oath or declaration by you pursuant to 37 CFR 1.63.

Telephone inquiries regarding this communication should be directed to Petitions Attorney Cliff Congo at (703) 305-0272. Requests for information regarding your application should be directed to the File Information Unit at (703) 308-2733. Information regarding how to pay for and order a copy of the application, or a specific paper in the application, should be directed to the Certification Division at (703) 308-9726 or 1-800-972-6382 (outside the Washington D.C. area).

for D Mood
Beverly M. Flanagan
Supervisory Petitions Examiner
Office of Petitions
Office of the Deputy Commissioner
for Patent Examination Policy

Mark D. Schneider
Gifford, Krass, Groh, Spinkle, Anderson & Citkowski P.C.
280 North Old Woodward
Suite 400
Birmingham, Michigan 48009
(248)647-6000

UNITED STATES PATENT AND TRADEMARK OFFICE

Commissioner for Patents
United States Patent and Trademark Office
P.O. Box 1450
Alexandria, VA 22313-1450
www.uspto.gov

FELLERS SNIDER BLANKENSHIP
BAILEY & TIPPENS
THE KENNEDY BUILDING
321 SOUTH BOSTON SUITE 800
TULSA, OK 74103-3318

COPY MAILED

OCT 0 7 2004

OFFICE OF PETITIONS

In re Application of	:	
Michael D. Mosk et al	:	
Application No. 09/977,051	:	ON PETITION
Filed: October 12, 2001	:	
Attorney Docket No. 88196/00-143	:	

This is a decision on the petition under 37 CFR 1.137(b), filed August 16, 2004, to revive the above-identified application.

The petition is **GRANTED**.

The above-identified application became abandoned for failure to reply in a timely manner to the final Office action mailed December 30, 2003, which set a shortened statutory period for reply of three (3) months. No extensions of time under the provisions of 37 CFR 1.136(a) were obtained. Accordingly, the above-identified application became abandoned on March 31, 2004.

An extension of time under 37 CFR 1.136 must be filed prior to the expiration of the maximum extendable period for reply. See In re Application of S., 8 USPQ2d 1630, 1631 (Comm'r Pats. 1988). Accordingly, since the $265 extension of time fee submitted with the petition on August 16, 2004 was subsequent to the maximum extendable period for reply, this fee is unnecessary and will be credited to petitioner's deposit account.

Telephone inquiries concerning this decision should be directed to Irvin Dingle at (571) 272-3210.

The application is being forwarded to Technology Center AU 3762 for further processing.

Irvin Dingle
Petitions Examiner
Office of Petitions
Office of the Deputy Commissioner
for Patent Examination Policy

UNITED STATES PATENT AND TRADEMARK OFFICE

Commissioner for Patents
United States Patent and Trademark Office
P.O. Box 1450
Alexandria, VA 22313-1450
www.uspto.gov

Paper No. 12

NEUROPACE, INC.
1375 SHOREBIRD WAY
MOUNTAIN VIEW, CA 94043

COPY MAILED
MAY 2 4 2004
OFFICE OF PETITIONS

In re Application of :
Benjamin D. Pless, et al. :
Application No. 09/977,052 :
Filed: October 12, 2001 :
Attorney Docket No. N02-01 :

ON PETITION

This is a decision on the petition under 37 CFR 1.137(b), filed April 23, 2004, to revive the above-identified application.

The petition is **GRANTED.**

The above-identified application became abandoned for failure to reply in a timely manner to the non-final Office action mailed August 12, 2003, which set a shortened statutory period for reply of three (3) months. No extensions of time under the provisions of 37 CFR 1.136(a) were obtained. Accordingly, the application became abandoned on November 13, 2003.

The application file is being forwarded to Technology Center 3700, Art Unit 3762 for further processing.

Telephone inquiries concerning this decision should be directed to the undersigned at (703) 306-5594.

Retta Williams

Retta Williams
Petitions Examiner
Office of Petitions
Office of the Deputy Commissioner
for Patent Examination Policy

UNITED STATES PATENT AND TRADEMARK OFFICE

Commissioner for Patents
United States Patent and Trademark Office
P.O. Box 1450
Alexandria, VA 22313-1450
www.uspto.gov

COPY MAILED
SEP 0 8 2006
OFFICE OF PETITIONS

NEUROPACE, INC.
1375 SHOREBIRD WAY
MOUNTAIN VIEW CA 94043

In re Application of	:	
Pless et al.	:	
Application No. 09/977,052	:	ON PETITION
Filed: October 12, 2001	:	
Attorney Docket Number: N02-01	:	

This is a decision on the petition filed May 11, 2006, under 37 CFR 1.137(b) to revive the above-identified application.

This application became abandoned for failure to timely submit the issue and publication fees, as required by the Notice of Allowance and Fee (s) Due which was mailed June 2, 2005. The Notice of Allowance and Fee (s) Due set a three (3) month statutory period for reply. Extensions of time were not available under the provisions of 37 CFR 1.136(a). Accordingly, this application became abandoned on September 3, 2005. A Notice of Abandonment was mailed on October 26, 2005.

The requirements for a grantable petition under 37 CFR 1.137(b) have been met. This petition is hereby **Granted**.

It is not apparent whether the person signing the statement of unintentional delay was in a position to have firsthand or direct knowledge of the facts and circumstances of the delay at issue. Nevertheless, such statement is being treated as having been made as the result of a reasonable inquiry into the facts and circumstances of such delay. See 37 CFR 10.18(b). In the event that such an inquiry has not been made, petitioner must make such an inquiry. If such inquiry results in the discovery that it is not correct that the entire delay in filing the required reply from the due date for the reply until the filing of a grantable petition pursuant to 37 CFR 1.137(b) was unintentional, petitioner must notify the Office.

There is no indication that Petitioner herein was ever empowered to prosecute the instant application. If Petitioner desires to receive future correspondence regarding this application, the appropriate power of attorney documentation and change of correspondence address must be submitted. A courtesy copy of this decision will be mailed to Petitioner. However, all future correspondence will be directed to the address of record until such time as appropriate instructions are received to the contrary

This application is being forwarded to the Office of Patent Publication for processing into a patent.

Telephone inquiries should be directed to the undersigned at (571) 272-3215.

Charlema R. Grant

Charlema R. Grant
Petitions Attorney
Office of Petitions

cc: Mika Mayer
Morrison & Foerster
755 Page Mill Road
Palo Alto, California 94304-1018

UNITED STATES PATENT AND TRADEMARK OFFICE

Commissioner for Patents
United States Patent and Trademark Office
P.O. Box 1450
Alexandria, VA 22313-1450
www.uspto.gov

SENNIGER POWERS LEAVITT AND ROEDEL
ONE METROPOLITAN SQUARE
16TH FLOOR
ST. LOUIS, MO 63102

COPY MAILED
SEP 18 2006
OFFICE OF PETITIONS

In re Application of :
Paula Mary Sosalla et al :
Application No. 09/977,062 : DECISION ON PETITION
Filed: October 12, 2001 :
Attorney Docket No. KCC 4777 :
K-C 17,448

This is a decision on the petition under 37 CFR 1.137(b), filed January 20, 2006, which, in view of the circumstances of this application, is being treated as a petition to revive under the unavoidable provisions of 37 CFR 1.137(a).

The petition is **GRANTED**.

The application became abandoned for failure to timely file a reply within the meaning of 37 CFR 1.113 to the final Office action of December 29, 2003. The proposed reply required for consideration of a petition to revive must be a Notice of Appeal (and appeal fee required by 37 CFR 41.20(b)(2), an amendment that *prima facie* places the application in condition for allowance, a Request for Continued Examination and submission (37 CFR 1.114), or the filing of a continuing application under 37 CFR 1.53(b). See MPEP 711.03(c)(II)(A)(2). No extensions of time pursuant to the provisions of 37 CFR 1.136(a) were obtained. Accordingly, the date of abandonment of this application is March 30, 2004.

The petition satisfies the requirements of 37 CFR 1.137(a) in that petitioner has supplied (1) the required reply in the form of a Request for Continued Examination (RCE), $790 filing fee, and submission as required by 37 CFR 1.114; (2) the petition fee of $700; and (3) a showing to the satisfaction of the Director that the entire delay was unavoidable.

Petitioner's deposit account will be credited $750, which is the difference between the $1,500 fee submitted with this petition and the fee required for a petition under the unavoidable provisions of 37 CFR 1.137(a).

An extension of time under 37 CFR 1.136 must be filed prior to the expiration of the maximum extendable period for reply. *See* In re Application of S., 8 USPQ2d 1630, 1631 (Comm'r Pats. 1988). Since the $1,020 extension of time fee submitted with the petition on January 20, 2006 was subsequent to the maximum extendable period for reply, this fee is unnecessary and will be credited to petitioner's deposit account.

This application is being referred to Technology Center AU 3761 for processing the RCE and for appropriate action in the normal course of business on the submission under 37 CFR 1.114.

Telephone inquiries concerning this decision should be directed to the undersigned at (571) 272-3218.

Frances Hicks
Petitions Examiner
Office of Petitions

UNITED STATES PATENT AND TRADEMARK OFFICE

Commissioner for Patents
United States Patent and Trademark Office
P.O. Box 1450
Alexandria, VA 22313-1450
www.uspto.gov

STERNE, KESSLER, GOLDSTEIN & FOX P.L.L.C.
1100 NEW YORK AVENUE, N.W.
WASHINGTON DC 20005

COPY MAILED

AUG 1 1 2008

OFFICE OF PETITIONS

In re Application of :
UHLER, G. Michael :
Application No. 09/977,084 :
Filed: October 12, 2001 :
Attorney Docket No. 1778.2940000 (0140.00US) :

DECISION GRANTING PETITION
UNDER 37 CFR 1.313(c)(2)

This is a decision on the petition under 37 CFR 1.313(c)(2), filed August 7, 2008, to withdraw the above-identified application from issue after payment of the issue fee.

The petition is GRANTED.

The above-identified application is withdrawn from issue for consideration of a submission under 37 CFR 1.114 (request for continued examination). *See* 37 CFR 1.313(c)(2).

Petitioner is advised that the issue fee paid on July 28, 2008 cannot be refunded. If, however, this application is again allowed, petitioner may request that it be applied towards the issue fee required by the new Notice of Allowance.[1]

Telephone inquiries should be directed to the undersigned at (571) 272-7253.

This application is being referred to Technology Center AU 2183 for processing of the request for continued examination under 37 CFR 1.114 and for consideration of the concurrently filed information disclosure statement.

Monica A. Graves
Petitions Examiner
Office of Petitions

---

[1] *The request to apply the issue fee to the new Notice may be satisfied by completing and returning the new Part B – Fee(s) Transmittal Form (along with any balance due at the time of submission). Petitioner is advised that the Issue Fee Transmittal Form* ***must*** *be completed and timely submitted to avoid abandonment of the application.*

UNITED STATES PATENT AND TRADEMARK OFFICE

COMMISSIONER FOR PATENTS
UNITED STATES PATENT AND TRADEMARK OFFICE
P.O. BOX 1450
ALEXANDRIA, VA 22313-1450
www.uspto.gov

LAW OFFICE OF DALE B. HALLING, LLC
655 SOUTHPOINTE COURT, SUITE 100
COLORADO SPRINGS, CO 80906

COPY MAILED

SEP 01 2006

OFFICE OF PETITIONS

In re Application of :
Christopher Lockton Brandin, et. al. :
Application No. 09/977,086 : ON PETITION
Filed: October 12, 2001 :
Attorney Docket No. NEO-0101 :

This is a decision on the petition under 37 CFR 1.137(b), filed January 3, 2006, to revive the above-identified application.

The petition is **DISMISSED**.

A grantable petition under 37 CFR 1.137(b) must be accompanied by: (1) the required reply, unless previously filed; (2) the petition fee as set forth in 37 CFR 1.17(m); (3) a statement that the entire delay in filing the required reply from the due date for the reply until the filing of a grantable petition pursuant to 37 CFR 1.137(b) was unintentional; and (4) any terminal disclaimer (and fee as set forth in 37 CFR 1.20(d)) required by 37 CFR 1.137(d). Where there is a question as to whether either the abandonment or the delay in filing a petition under 37 CFR 1.137 was unintentional, the Commissioner may require additional information. See MPEP 711.03(c)(III)(C) and (D). The instant petition lacks item(s) (1).

The application became abandoned for failure to timely file a reply within the meaning of 37 CFR 1.113 to the final Office action mailed March 17, 2005. The proposed reply required for consideration of a petition to revive must be a Notice of Appeal (and appeal fee required by 37 CFR 41.20(b)(2)), an amendment that *prima facie* places the application in condition for allowance, a Request for Continued Examination (RCE) and submission (37 CFR 1.114), or the filing of a continuing application under 37 CFR 1.53(b). See MPEP 711.03(c)(III)(A)(2). Since the amendment submitted does not *prima facie* place the application in condition for allowance, the reply required must be a Notice of Appeal (and appeal fee), RCE, or the filing of a continuing application under 37 CFR 1.53(b). A courtesy copy of the Advisory Action is being mailed with this decision on petition.

Any request for reconsideration of this decision must be submitted within **TWO (2) MONTHS** from the mail date of this decision. Extensions of time under 37 CFR 1.136(a) are permitted. The reconsideration request should include a cover letter entitled "Renewed Petition under 37 CFR 1.137(b)." This is **not** a final agency action within the meaning of 5 U.S.C. § 704.

Further correspondence with respect to this matter should be addressed as follows:

By Mail: Mail Stop PETITION
Commissioner for Patents
P.O. Box 1450
Alexandria, VA 22313-1450

By hand: U. S. Patent and Trademark Office
Customer Service Window, Mail Stop Petitions
Randolph Building
401 Dulany Street
Alexandria, VA 22314

The centralized facsimile number is **(571) 273-8300.**

Telephone inquiries concerning this decision should be directed to the undersigned at (571) 272-3226.

Andrea Smith
Petitions Examiner
Office of Petitions

Enclosure: Courtesy Copy of the Advisory Action

Advisory Action Before the Filing of an Appeal Brief	Application No. 09/977,086	Applicant(s) BRANDIN ET AL.	
	Examiner Mohammad Ali	Art Unit 2166	

--The MAILING DATE of this communication appears on the cover sheet with the correspondence address --

THE REPLY FILED 03 January 2006 FAILS TO PLACE THIS APPLICATION IN CONDITION FOR ALLOWANCE.

1. ☐ The reply was filed after a final rejection, but prior to or on the same day as filing a Notice of Appeal. To avoid abandonment of this application, applicant must timely file one of the following replies: (1) an amendment, affidavit, or other evidence, which places the application in condition for allowance; (2) a Notice of Appeal (with appeal fee) in compliance with 37 CFR 41.31; or (3) a Request for Continued Examination (RCE) in compliance with 37 CFR 1.114. The reply must be filed within one of the following time periods:
   a) ☐ The period for reply expires _____months from the mailing date of the final rejection.
   b) ☐ The period for reply expires on: (1) the mailing date of this Advisory Action, or (2) the date set forth in the final rejection, whichever is later. In no event, however, will the statutory period for reply expire later than SIX MONTHS from the mailing date of the final rejection.

   Examiner Note: If box 1 is checked, check either box (a) or (b). ONLY CHECK BOX (b) WHEN THE FIRST REPLY WAS FILED WITHIN TWO MONTHS OF THE FINAL REJECTION. See MPEP 706.07(f).

Extensions of time may be obtained under 37 CFR 1.136(a). The date on which the petition under 37 CFR 1.136(a) and the appropriate extension fee have been filed is the date for purposes of determining the period of extension and the corresponding amount of the fee. The appropriate extension fee under 37 CFR 1.17(a) is calculated from: (1) the expiration date of the shortened statutory period for reply originally set in the final Office action; or (2) as set forth in (b) above, if checked. Any reply received by the Office later than three months after the mailing date of the final rejection, even if timely filed, may reduce any earned patent term adjustment. See 37 CFR 1.704(b).

NOTICE OF APPEAL

2. ☐ The Notice of Appeal was filed on _____. A brief in compliance with 37 CFR 41.37 must be filed within two months of the date of filing the Notice of Appeal (37 CFR 41.37(a)), or any extension thereof (37 CFR 41.37(e)), to avoid dismissal of the appeal. Since a Notice of Appeal has been filed, any reply must be filed within the time period set forth in 37 CFR 41.37(a).

AMENDMENTS

3. ☐ The proposed amendment(s) filed after a final rejection, but prior to the date of filing a brief, will not be entered because
   (a) ☐ They raise new issues that would require further consideration and/or search (see NOTE below);
   (b) ☐ They raise the issue of new matter (see NOTE below);
   (c) ☐ They are not deemed to place the application in better form for appeal by materially reducing or simplifying the issues for appeal; and/or
   (d) ☐ They present additional claims without canceling a corresponding number of finally rejected claims.

   NOTE: _____. (See 37 CFR 1.116 and 41.33(a)).
4. ☐ The amendments are not in compliance with 37 CFR 1.121. See attached Notice of Non-Compliant Amendment (PTOL-324).
5. ☐ Applicant's reply has overcome the following rejection(s): _____.
6. ☐ Newly proposed or amended claim(s) _____ would be allowable if submitted in a separate, timely filed amendment canceling the non-allowable claim(s).
7. ☐ For purposes of appeal, the proposed amendment(s): a) ☐ will not be entered, or b) ☐ will be entered and an explanation of how the new or amended claims would be rejected is provided below or appended.
   The status of the claim(s) is (or will be) as follows:
   Claim(s) allowed: _____.
   Claim(s) objected to: _____.
   Claim(s) rejected: _____.
   Claim(s) withdrawn from consideration: _____.

AFFIDAVIT OR OTHER EVIDENCE

8. ☐ The affidavit or other evidence filed after a final action, but before or on the date of filing a Notice of Appeal will not be entered because applicant failed to provide a showing of good and sufficient reasons why the affidavit or other evidence is necessary and was not earlier presented. See 37 CFR 1.116(e).
9. ☐ The affidavit or other evidence filed after the date of filing a Notice of Appeal, but prior to the date of filing a brief, will not be entered because the affidavit or other evidence failed to overcome all rejections under appeal and/or appellant fails to provide a showing a good and sufficient reasons why it is necessary and was not earlier presented. See 37 CFR 41.33(d)(1).
10. ☐ The affidavit or other evidence is entered. An explanation of the status of the claims after entry is below or attached.

REQUEST FOR RECONSIDERATION/OTHER

11. ☐ The request for reconsideration has been considered but does NOT place the application in condition for allowance because: _____.
12. ☐ Note the attached Information Disclosure Statement(s). (PTO/SB/08 or PTO-1449) Paper No(s). _____
13. ☒ Other: See Continuation Sheet.

/Mohammad Ali/
Mohammad Ali
Primary Examiner

Continuation of 13. Other: Examiner conducted a search for prior art on 3/17/05 for the insant case. By this time there are several patents issued and several applications are pending. Therefore, new search is required at this time to ensure the pending amendment claims.

UNITED STATES PATENT AND TRADEMARK OFFICE

COMMISSIONER FOR PATENTS
UNITED STATES PATENT AND TRADEMARK OFFICE
WASHINGTON, D.C. 20231
www.uspto.gov

Paper No. 10

ROPES & GRAY
ONE INTERNATIONAL PLACE
BOSTON, MA 02110

COPY MAILED

DEC 1 0 2002

OFFICE OF PETITIONS

In re Application of :
Anthony David Baxter et al :
Application No. 09/977,096 : NOTICE
Filed: October 12, 2001 :
Attorney Docket No. CIBT-P02-105 :

This is a notice regarding your request for acceptance of a fee deficiency submission under 37 CFR 1.28. On September 1, 1998, the Court of Appeals for the Federal Circuit held that 37 CFR 1.28(c) is the sole provision governing the time for correction of the erroneous payment of the issue fee as a small entity. **See DH Technology v. Synergystex International, Inc. 154 F.3d 1333, 47 USPQ2d 1865 (Fed. Cir. Sept. 1, 1998).**

The Office no longer investigates or rejects original or reissue applications under 37 CFR 1.56. **1098 Off. Gaz. Pat. Office 502 (January 3, 1989)**. Therefore, nothing in this Notice is intended to imply that an investigation was done.

Your fee deficiency submission under 37 CFR 1.28 is hereby **ACCEPTED**.

Inquiries related to this communication should be directed to the Office of Petitions Staff at (703) 305-9285.

This file is being forwarded to Technology Center AU 1614.

Wan Laymon
Petitions Examiner
Office of Petitions
Office of the Deputy Commissioner
for Patent Examination Policy

UNITED STATES PATENT AND TRADEMARK OFFICE

Commissioner for Patents
United States Patent and Trademark Office
P.O. Box 1450
Alexandria, VA 22313-1450
www.uspto.gov

WAGNER, MURABITO & HAO LLP
Third Floor
Two North Market Street
San Jose, CA 95113

COPY MAILED
JUL 28 2006
OFFICE OF PETITIONS

In re Application of Shutt and Kutz	:	
Application No. 09/977,111	:	Decision on Petition
Filing Date: October 11, 2001	:	
Attorney Docket No. CYPR-CD00202	:	

This is a decision on the petition under 37 CFR 1.181, filed November 12, 2003, to withdraw the holding of abandonment.

The petition is **granted.**

Facts:

A Notice to File Corrected Papers was mailed November 19, 2001.

As demonstrated by a showing in compliance with 37 CFR 1.8(b), petitioner mailed a reply to the Notice on December 31, 2001.

Unfortunately, the reply incorrectly listed the application number as 09/997,111. As a result, the reply was not matched with the file for the instant application.

A Notice of Abandonment was mailed November 6, 2003.

A petition to withdraw the holding of abandonment and check for $130 were filed November 12, 2003. Unfortunately, the petition incorrectly listed the application number as 09/997,111.

A new petition to withdraw the holding of abandonment and a new check for $130 were filed February 9, 2004. The new petition listed the correct application number.

Discussion:

At the discretion of the Office, a paper listing an incorrect application number may be considered timely and proper. The Office will accept papers as timely filed if the following criteria are met:

(1) The papers contained sufficient information for the Office to recognize they included an incorrect application number.

(2) The papers contained sufficient information for the Office to determine the correct application number.

The December 31, 2001 reply contained sufficient information for the Office to recognize it included an incorrect application number. The reply contained sufficient information for the Office to determine the correct application number. Therefore, the Notice of Abandonment is hereby vacated and the holding of abandonment withdrawn.

A fee is unnecessary for a petition under 37 CFR 1.181. Therefore, the Office will schedule a refund of the $130 paid on November 12, 2003, and the $130 paid on February 9, 2004.

The file will now be forwarded to the Office of Initial Patent Examination for further processing.

Telephone inquiries regarding this communication should be directed to Petitions Attorney Steven Brantley at (571) 272-3203.

Charles Steven Brantley
Senior Petitions Attorney
Office of Petitions

UNITED STATES PATENT AND TRADEMARK OFFICE

Commissioner for Patents
United States Patent and Trademark Office
P.O. Box 1450
Alexandria, VA 22313-1450
www.uspto.gov

EDELL, SHAPIRO
& FINNAN, LLC
1901 RESEARCH BOULEVARD
SUITE 400
ROCKVILLE MD 20850

COPY MAILED
MAR 24 2009
OFFICE OF PETITIONS

In re Application of	:	
Mercurio	:	
Application No. 09/977,112	:	DECISION
Filed: 11 October, 2001	:	
Attorney Docket No. 0370.0726C	:	

This is a decision on the petitions filed on 27 February, 2009, to revive an application under 37 C.F.R. §1.137(b) as having been abandoned due to unintentional delay.

The petition as considered under 37 C.F.R. §1.137(b) is **GRANTED**.

As to Allegations of
Unintentional Delay

The requirements of a grantable petition pursuant to 37 C.F.R. §1.137(b) are the petition and fee therefor, a reply, a proper statement of unintentional delay under the regulation, and, where applicable, a terminal disclaimer and fee. (However, it does not appear that a terminal disclaimer and fee are due here.)

BACKGROUND

The record reflects as follows:

Former Counsel failed to reply timely and properly to the final Office action mailed on 29 June, 2007, with reply due absent extension of time on or before 29 September, 2007.

On 4 September, 2007, former Counsel submitted an amendment after final, which the Examiner refused to enter and former Counsel–as one registered to practice before the Office—knew was

not as of right and not a proper reply[1] if it did not *prima facie* place the application in condition for allowance, and on 18 September, 2007, the Examiner mailed an Advisory Action.

The application went abandoned after midnight 29 September, 2007.

The Office mailed a Notice of Abandonment on 5 September, 2008.

On 27 February, 2009, Petitioner D. Andrew Floam (Reg. No. 34,597) filed, *inter alia*, a petition (with fee) pursuant to 37 C.F.R. §1.137(b) averring unintentional delay, a reply in the form of a request for continued examination (RCE) and fee and a submission under the provisions of 37 C.F.R. §1.114 in the form of the previously filed amendment, and made the statement of unintentional delay.

> *It is not apparent whether the person signing the statement of unintentional delay was in a position to have firsthand or direct knowledge of the facts and circumstances of the delay at issue.*
>
> *Nevertheless, such statement is being treated as having been made as the result of a reasonable inquiry into the facts and circumstances of such delay.*[2] *In the event that such an inquiry has not been made, Petitioner* ***must*** *make such an inquiry.*
>
> *If such inquiry results in the discovery that it is not correct that the entire delay in filing the required reply from the due date for the reply until the filing of a grantable petition pursuant to 37 C.F.R. §1.137(b) was unintentional, Petitioner* ***must*** *notify the Office.*

The record (including the petition filed on 27 February, 2009) does not necessitate a finding that the delay between midnight 29 September, 2007 (date of abandonment), and 27 February, 2008 (date of filing of grantable petition), was not unintentional.

Rather, the Patent and Trademark Office is relying in this matter on the duty of candor and good faith of Petitioner's Counsel D. Andrew Floam (Reg. No. 34,597) when accepting Petitioner's representation that the delay in filing the response was unintentional.[3]

The availability of applications and application papers online to applicants/practitioners who diligently associate their Customer Number with the respective application(s) now provides an applicant/practitioner on-demand information as to events/transactions in an application.

---

[1] A proper reply is an amendment *prima facie* placing the application in condition for allowance, a Notice of Appeal, or an RCE (with fee and submission under 37 C.F.R. §1.114). (See: MPEP §711.03(c).)

[2] See 37 C.F.R. §10.18(b) and Changes to Patent Practice and Procedure; Final Rule Notice, 62 Fed. Reg. 53131, 53178 (October 10, 1997), 1203 Off. Gaz. Pat. Office 63, 103 (October 21, 1997).

[3] See Changes to Patent Practice and Procedure, 62 Fed. Reg. at 53160 and 53178, 1203 Off. Gaz. Pat. Office at 88 and 103 (responses to comments 64 and 109)(applicant obligated under 37 C.F.R. §10.18 to inquire into the underlying facts and circumstances when providing the statement required by 37 C.F.R. §1.137(b) to the Patent and Trademark Office).

Out of an abundance of caution, Petitioners always are reminded that those registered to practice and all others who make representations before the Office **must** inquire into the underlying facts of representations made to the Office and support averments with the appropriate documentation–since all owe to the Office the continuing duty to disclose.[4]

STATUTES, REGULATIONS AND ANALYSIS

Congress has authorized the Commissioner to "revive an application if the delay is shown to the satisfaction of the Commissioner to have been "unavoidable." 35 U.S.C. §133 (1994).[5]
The regulations at 37 C.F.R. §1.137(a) and (b) set forth the requirements for a Petitioner to revive a previously unavoidably or unintentionally, respectively, abandoned application under this congressional grant of authority.

Unintentional delays are those that do not satisfy the very strict statutory and regulatory requirements of unavoidable delay, and also, by definition, are not intentional.[6]))

As to Allegations of Unintentional Delay

It appears that the requirements under 37 C.F.R. §1.137(b) have been satisfied.

CONCLUSION

Accordingly, the petition under 37 C.F.R. §1.137(b) is **granted**.

The instant application is released to the Technology Center/AU 2183 for further processing in due course.

Petitioner may find it beneficial to view Private PAIR within a fortnight of the instant decision to ensure that the revival has been acknowledged by the TC/AU in response to this decision. It is

---

[4] See supplement of 17 June, 1999. The Patent and Trademark Office is relying on petitioner's duty of candor and good faith and accepting a statement made by Petitioner. See Changes to Patent Practice and Procedure, 62 Fed. Reg. at 53160 and 53178, 1203 Off. Gaz. Pat. Office at 88 and 103 (responses to comments 64 and 109)(applicant obligated under 37 C.F.R. §10.18 to inquire into the underlying facts and circumstances when providing statements to the Patent and Trademark Office).

[5] 35 U.S.C. §133 provides:

35 U.S.C. §133 Time for prosecuting application.
Upon failure of the applicant to prosecute the application within six months after any action therein, of which notice has been given or mailed to the applicant, or within such shorter time, not less than thirty days, as fixed by the Commissioner in such action, the application shall be regarded as abandoned by the parties thereto, unless it be shown to the satisfaction of the Commissioner that such delay was unavoidable.

[6] Therefore, by example, an unintentional delay in the reply might occur if the reply and transmittal form are to be prepared for shipment by the US Postal Service, but other pressing matters distract one's attention and the mail is not timely deposited for shipment.

noted that all inquiries with regard to that change in status need be directed to the TC/AU where that change of status must be effected—that does not occur in the Office of Petitions.

Telephone inquiries regarding this decision may be directed to the undersigned at (571) 272-3214—it is noted, however, that all practice before the Office is in writing (see: 37 C.F.R. §1.2[7]) and the proper authority for action on any matter in this regard are the statutes (35 U.S.C.), regulations (37 C.F.R.) and the commentary on policy (MPEP). Therefore, no telephone discussion may be controlling or considered authority for Petitioner's action(s).

/John J. Gillon, Jr./
John J. Gillon, Jr.
Senior Attorney
Office of Petitions

[7] The regulations at 37 C.F.R. §1.2 provide:
§1.2 Business to be transacted in writing.
All business with the Patent and Trademark Office should be transacted in writing. The personal attendance of applicants or their attorneys or agents at the Patent and Trademark Office is unnecessary. The action of the Patent and Trademark Office will be based exclusively on the written record in the Office. No attention will be paid to any alleged oral promise, stipulation, or understanding in relation to which there is disagreement or doubt.

UNITED STATES PATENT AND TRADEMARK OFFICE

COMMISSIONER FOR PATENTS
UNITED STATES PATENT AND TRADEMARK OFFICE
WASHINGTON, D.C. 20231
www.uspto.gov

Paper No. 6

SUMMA & ALLAN, P.A.
11610 NORTH COMMUNITY HOUSE ROAD
SUITE 200
CHARLOTTE NC 28277

COPY MAILED

OCT 23 2002

OFFICE OF PETITIONS

In re Application of
S.M. Pillai, A. Wali, and S. Satish
Application No. 09/977,127
Filed: October 12, 2001
Attorney Docket No. 1700.109
For: HETEROGENEOUS PD CATALYSTS AND MICROWAVE IRRADIATION IN HECK ARYLATION

: DECISION DISMISSING
: PETITION UNDER
: 37 CFR 1.47

This is in response to the petition under 37 CFR 1.47(a) filed September 12, 2002.

The petition is **dismissed**.

Any request for reconsideration of this decision must be submitted within TWO (2) MONTHS from the mail date of this decision. Extensions of time under 37 CFR 1.136(a) are permitted. Any response should be entitled "Request for Reconsideration of Petition Under 37 CFR 1.47(a)" and may include an oath or declaration executed by the inventor. **Failure to respond will result in abandonment of the application.**

A grantable petition under 37 CFR 1.47(a) requires

(1) proof that the non-signing inventor cannot be found or reached after diligent effort or that the inventor refuses to sign after having been presented with the application papers (specification, claims, and drawings),
(2) a proper oath or Declaration executed by the available joint inventor(s),
(3) the fee of $130 as specified in 37 CFR § 1.17(h), and
(4) the last known address of the omitted inventor(s).

Although petitioner has shown that the non-signing inventors cannot be located after diligent effort, petitioner has failed to comply with (2). 37 CFR 1.63 states that an oath or declaration must, "Identify each inventor by full name, including the family name, and at least one given name without abbreviation together with any other given name or initial." The declaration lists the name of Mr. Wali as simply A. Wali. Therefore, the declaration fails to comply with 37 CFR 1.63.

The petition states that a check for $130 is included. However, the Office is unable to locate a check for $130. Therefore, $130 has been charged to petitioner's deposit account.

In order to expedite consideration, petitioner may wish to submit the renewed petition under 37 CFR 1.47 by facsimile transmission to the telephone number indicated below and to the attention of the undersigned.

Further correspondence with respect to this matter should be addressed as follows:

By mail: Commissioner for Patents
Box DAC
Washington, D.C. 20231

By facsimile: (703) 308-6916
Attn: Office of Petitions

By hand: Office of Petitions
2201 South Clark Place
Crystal Plaza 4, Suite 3C23
Arlington, VA 22202

Telephone inquiries should be directed to Petitions Attorney Steven Brantley at (703) 306-5683.

Charles Steven Brantley
Petitions Attorney
Office of Petitions
Office of the Deputy Commissioner
for Patent Examination Policy

UNITED STATES PATENT AND TRADEMARK OFFICE

COMMISSIONER FOR PATENTS
UNITED STATES PATENT AND TRADEMARK OFFICE
WASHINGTON, D.C. 20231
www.uspto.gov

Paper No. 8

SUMMA & ALLAN, P.A.
11610 NORTH COMMUNITY HOUSE ROAD
SUITE 200
CHARLOTTE NC 28277

COPY MAILED

JAN 13 2003

OFFICE OF PETITIONS

In re Application of	:
S.M. Pillai, A. Wali, and S. Satish	: DECISION DISMISSING
Application No. 09/977,127	: PETITION UNDER
Filed: October 12, 2001	: 37 CFR 1.47
Attorney Docket No. 1700.109	:
For: HETEROGENEOUS PD CATALYSTS AND MICROWAVE IRRADIATION IN HECK ARYLATION	:

This is in response to the renewed petition under 37 CFR 1.47(a) filed December 20, 2002.

The petition is **dismissed**.

Any request for reconsideration of this decision must be submitted within TWO (2) MONTHS from the mail date of this decision. Extensions of time under 37 CFR 1.136(a) are permitted. Any response should be entitled "Request for Reconsideration of Petition Under 37 CFR 1.47(a)" and may include an oath or declaration executed by the inventor. **Failure to respond will result in abandonment of the application.**

The merits of the petition under 37 CFR 1.183 will not be considered at this time since the instant decision results in petitioner being given additional time to supply a supplemental declaration.

37 CFR 1.63 states that an oath or declaration must, "Identify each inventor by full name, including the family name, and at least one given name without abbreviation together with any other given name or initial." The declaration lists the name of Mr. Wali as simply A. Wali. Therefore, the declaration fails to comply with 37 CFR 1.63.

In order to expedite consideration, petitioner may wish to submit the renewed petition under 37 CFR 1.47 by facsimile transmission to the telephone number indicated below and to the attention of the undersigned.

Further correspondence with respect to this matter should be addressed as follows:

By mail: Commissioner for Patents
Box DAC
Washington, D.C. 20231

By facsimile: (703) 308-6916
Attn: Office of Petitions

Telephone inquiries should be directed to Petitions Attorney Steven Brantley at (703) 306-5683.

Charles Steven Brantley
Petitions Attorney
Office of Petitions
Office of the Deputy Commissioner
for Patent Examination Policy

UNITED STATES PATENT AND TRADEMARK OFFICE

COMMISSIONER FOR PATENTS
UNITED STATES PATENT AND TRADEMARK OFFICE
WASHINGTON, D.C. 20231
www.uspto.gov

Paper No. 11

SUMMA & ALLAN, P.A.
11610 NORTH COMMUNITY HOUSE ROAD
SUITE 200
CHARLOTTE NC 28277

COPY MAILED

MAR 1 7 2003

OFFICE OF PETITIONS

In re Application of
S.M. Pillai, A. Wali, and S. Satish
Application No. 09/977,127
Filed: October 12, 2001
Attorney Docket No. 1700.109
For: HETEROGENEOUS PD CATALYSTS AND MICROWAVE IRRADIATION IN HECK ARYLATION

: DECISION GRANTING
: PETITION UNDER
: 37 CFR 1.47

This is in response to the renewed petition under 37 CFR 1.47(a) filed March 12, 2003.

The petition is granted.

The above-identified application was filed on November 14, 1997, with an unexecuted declaration. Accordingly, on March 5, 1998, a "Notice to File Missing Parts of Application" was mailed, requiring the insufficiency in filing fee, an executed declaration, and a surcharge for their late filing. The Notice was remailed on February 5, 1999. In response, on August 10, 1999, the instant petition, a petition for a four month extension of time, and a declaration signed by only one of the four inventors was filed.

Petitioner has shown that the non-signing inventors cannot be located.

The above-identified application and papers have been reviewed and found in compliance with 37 CFR 1.47(a). This application is hereby accorded Rule 1.47(a) status.

As provided in Rule 1.47(c), this Office will forward notice of this application's filing to the non-signing inventors at the addresses given in the petition. Notice of the filing of this application will also be published in the Official Gazette.

After this decision is mailed, the application will be returned to the Office of Initial Patent Examination for further processing.

Telephone inquiries should be directed to Petitions Attorney Steven Brantley at (703) 306-5683.

Charles Steven Brantley
Petitions Attorney
Office of Petitions

UNITED STATES PATENT AND TRADEMARK OFFICE

COMMISSIONER FOR PATENTS
UNITED STATES PATENT AND TRADEMARK OFFICE
WASHINGTON, D.C. 20231
www.uspto.gov

Paper No. 12

Anil Wali
IPCL
PO: Petrochemicals 391346
Vadodara
India

COPY MAILED

MAR 1 7 2003

OFFICE OF PETITIONS

In re Application of
S.M. Pillai, A. Wali, and S. Satish
Application No. 09/977,127
Filed: October 12, 2001
Attorney Docket No. 1700.109
For: HETEROGENEOUS PD CATALYSTS AND MICROWAVE IRRADIATION IN HECK ARYLATION

Letter

Dear Mr. Wali:

You are named as a joint inventor in the above identified United States patent application, filed under the provisions of 35 U.S.C. 116 (United States Code), and 37 CFR 1.47(a), Rules of Practice in Patent Cases. Should a patent be granted on the application you will be designated therein as a joint inventor.

As a named inventor you are entitled to inspect any paper in the file wrapper of the application, order copies of all or any part thereof (at a prepaid cost per 37 CFR 1.19) or make your position of record in the application. Alternatively, you may arrange to do any of the preceding through a registered patent attorney or agent presenting written authorization from you. If you care to join the application, counsel of record (see below) would presumably assist you. Joining in the application would entail the filing of an appropriate oath or declaration by you pursuant to 37 CFR 1.63.

Requests for information regarding your application should be directed to the File Information Unit at (703)308-2733. Information regarding how to pay for and order a copy of the application, or a specific paper in the application, should be directed to Certification Division at (703)308-9726 or 1(800)972-6382 (outside the Washington D.C. area).

Telephone inquiries should be directed to Petitions Attorney Steven Brantley at (703) 306-5683.

Charles Steven Brantley
Petitions Attorney
Office of Petitions

cc: SUMMA & ALLAN, P.A.
11610 NORTH COMMUNITY HOUSE ROAD
SUITE 200
CHARLOTTE NC 28277

UNITED STATES PATENT AND TRADEMARK OFFICE

UNITED STATES DEPARTMENT OF COMMERCE
United States Patent and Trademark Office
Address: COMMISSIONER FOR PATENTS
P.O. Box 1450
Alexandria, Virginia 22313-1450
www.uspto.gov

November 6, 2003

Clague P. Hodgson
Nature Technology Corp.
4701 Innovation Dr.
Lincoln, NE 68521

In re application of:
Corrado Spadafora DECISION ON PETITION
Serial No.: 09/977,179
Filed: October 15, 2001
For: RNA TRANSFECTION OF SPERM CELLS

This is a decision on the petition received August 21, 2003, to withdraw the holding of abandonment in the above-identified application.

The above-identified application became abandoned for failure to reply within the meaning of 37 C.F.R. 1.113 in timely manner to the Notice of Missing Parts of Nonprovisional Application mailed November 16, 2001. In which the notice gave a shortened statutory period for reply of two (2) months. Accordingly, this application became abandoned on January 17, 2002.

Upon review, it was noted that the Notice of Missing Parts of Nonprovisional Application mailed on June 20, 2001, was mailed in error. The charge authorization forward to the office on October 15, 2001, will be used to charge the additional $15.00 filing fee.

The application has been completed and released to Technology Center1645.

The office regrets any inconvenience this may have caused the client.

Telephone inquiries concerning this matter may be directed to Doshie E. Day (703) 308-3640.

Doshie E. Day
Program Management Assistant
Office initial Patent Examination

UNITED STATES PATENT AND TRADEMARK OFFICE

UNITED STATES DEPARTMENT OF COMMERCE
United States Patent and Trademark Office
Address: COMMISSIONER FOR PATENTS
P.O. Box 1450
Alexandria, Virginia 22313-1450
www.uspto.gov

APPLICATION NO.	FILING DATE	FIRST NAMED INVENTOR	ATTORNEY DOCKET NO.	CONFIRMATION NO.
09/977,192	10/16/2001	Stefan Andersson	0119-082	3198

42015 7590 10/17/2008
POTOMAC PATENT GROUP PLLC
P. O. BOX 270
FREDERICKSBURG, VA 22404

EXAMINER
WILLIAMS, JEFFERY L

ART UNIT	PAPER NUMBER
2437	

NOTIFICATION DATE	DELIVERY MODE
10/17/2008	ELECTRONIC

Please find below and/or attached an Office communication concerning this application or proceeding.

The time period for reply, if any, is set in the attached communication.

Notice of the Office communication was sent electronically on above-indicated "Notification Date" to the following e-mail address(es):

tammy@ppglaw.com

UNITED STATES PATENT AND TRADEMARK OFFICE

Commissioner for Patents
United States Patent and Trademark Office
P.O. Box 1450
Alexandria, VA 22313-1450
www.uspto.go

MAILED

OCT 16 2008

TECHNOLOGY CENTER 2100

Kenneth Leffler
P.O. Box 270
Fredericksburg VA 22404

In re Application of:
Andersson
Application No. 09/977,192
Filed: October 16, 2001
For: Security System

DECISION GRANTING PETITION TO RESET PERIOD FOR REPLY

This is a decision on the petition filed on October 15, 2007, requesting that the period for reply set forth in the Office communication mailed on December 26, 2006 be restarted so to June 20, 2007 and that the 5 month extension of time fees paid be refunded as the December 26, 2006 office communications was not received.

In the absence of any apparent irregularity associated with the mailing of an Office communication, the Office presumes that the communication was properly mailed to the address of record. This presumption may be overcome by showing that the Office communication was not received.

The relevant portion of MPEP § 711.03(c) states:

> The showing required to establish nonreceipt of an Office communication must include a statement from the practitioner stating that the Office communication was not received by the practitioner and attesting to the fact that a search of the file jacket and docket records indicates that the Office communication was not received. A copy of the docket record where the nonreceived Office communication would have been entered had it been received and docketed must be attached to and referenced in practitioner's statement.

In support of the petition, the petitioner stated that the Office Action mailed December 26, 2006 was never received by applicants and stated applicant's representative only discovered the Office Action recently. The petitioner supplied a copy of docket record (Exhibits D & E) showing that the Office Action was never received by applicant's representative. The docket record shows no entry reflecting receipt of the Office Action. Petitioner additionally provided a statement attesting to the fact that a search of the file jacket and docket record indicated that the Office Action was not received.

For the above-stated reasons the period for response for the December 26, 2006 office communications is hereby reset to begin June 20, 2007. As such the June 25, 2007 response

does not require the paid 5 month of extension of time and this payment (2,160.00) is considered in error and is hereby refunded

For the above-stated reasons, the petition is **GRANTED on both accounts**.

Another office action is being prepared by the examiner and should be received shortly by applicant.

Any inquiry concerning this decision should be directed to the undersigned whose telephone is (571) 272-3612. A second point of contact is QAS Kim Huynh at (571) 272-4147.

/Tod Swann/

Tod Swann
Quality Assurance Specialist
Technology Center 2400

SPE RESPONSE FOR CERTIFICATE OF CORRECTION

DATE : 1/29/07

Paper No.: ——

TO SPE OF : ART UNIT 2611

SUBJECT : Request for Certificate of Correction for Appl. No.: 9/977193 Patent No.: 7072420 B2

Please respond to this request for a certificate of correction within 7 days.

Please review the requested changes/corrections as shown in the **COCIN** document(s) in the IFW application image. No new matter should be introduced, nor should the scope or meaning of the claims be changed.

Please complete the response (see below) and forward the completed response to scanning using document code **COCX**.

Virginia Tolbert
Certificates of Correction Branch

703-308-9390 ext. 113

Thank You For Your Assistance

The request for issuing the above-identified correction(s) is hereby:
Note your decision on the appropriate box.

- ☒ **Approved** — All changes apply.
- ☐ **Approved in Part** — Specify below which changes **do not** apply.
- ☐ **Denied** — State the reasons for denial below.

Comments: Corrections approved.

SPE

2611
Art Unit

UNITED STATES PATENT AND TRADEMARK OFFICE

COMMISSIONER FOR PATENTS
UNITED STATES PATENT AND TRADEMARK OFFICE
P.O. BOX 1450
ALEXANDRIA, VA 22313-1450
www.uspto.gov

WOODCOCK WASHBURN LLP
CIRA CENTRE, 12TH FLOOR
2929 ARCH STREET
PHILADELPHIA PA 19104-2891

COPY MAILED

JUN 21 2007

OFFICE OF PETITIONS

In re Application of :
Charbonneau : DECISION ON PETITION
Application No. 09/977,203 :
Filed: October 16, 2001 :
Atty. Dkt. No.: 12-67 US :

This is a decision on the petition under 37 CFR 1.137(b), filed May 7, 2007, to revive the above-identified application.

The petition is **GRANTED**.

This application became abandoned September 29, 2005 for failure to timely submit a proper reply to the final Office action mailed June 28, 2005. The final Office action set a three (3) month shortened statutory period of time for reply. Notice of Abandonment was mailed January 18, 2006.

A grantable petition under 37 CFR 1.137(b) must be accompanied by: (1) the required reply, unless previously filed; (2) the petition fee as set forth in 37 CFR 1.17(l); (3) a showing to the satisfaction of the Director that the entire delay in filing the required reply from the due date for the reply until the filing of a grantable petition pursuant to 37 CFR 1.137(b) was unintentional; and (4) any terminal disclaimer (and fee as set forth in 37 CFR 1.20(d)) required pursuant to 37 CFR 1.137(c).

The above-identified application has been abandoned for an extended period of time. The Patent and Trademark Office is relying on petitioner's duty of candor and good faith in accepting the statement that the entire delay in filing the required reply from the due date for the reply until the filing of a grantable petition pursuant to 37 CFR 1.137(b) was unintentional. See, Changes to Patent Practice and Procedure, 62 Fed. Reg. at 53160 and 53178; 1203 Off. Gaz. Pat. Office at 88 and 103 (responses to comments 64 and 109)(applicant obligated under 37 CFR 10.18 to inquire into the underlying facts and circumstances when providing the statement required by 37 CFR 1.137(b) to the Patent and Trademark Office).

The instant petition has been reviewed and found in compliance with the provisions of 37 CFR 1.137(b). Accordingly, the failure to timely submit a proper reply to the final Office action is accepted as having been unintentionally delayed.

This application file is being forwarded to Technology Center 2100 for processing of the RCE submitted herewith.

Telephone inquiries concerning this matter may be directed to the undersigned at (571) 272-3205.

Alesia M. Brown
Petitions Attorney
Office of Petitions

UNITED STATES PATENT AND TRADEMARK OFFICE

Commissioner for Patents
United States Patent and Trademark Office
P.O. Box 1450
Alexandria, VA 22313-1450
www.uspto.gov

WOODCOCK WASHBURN LLP
CIRA CENTRE, 12TH FLOOR
2929 ARCH STREET
PHILADELPHIA, PA 19104-2891

COPY MAILED

MAR 3 1 2008

In re Application of	:	
CHARBONNEAU, Marc	:	
Application No. 09/977,203	:	DECISION ON PETITION
Filed: October 16, 2001	:	TO WITHDRAW
Attorney Docket No. **IVPH-0766**	:	FROM RECORD
	:	

This is a decision on the Request to Withdraw as attorney or agent of record under 37 C.F.R. § 1.36(b), filed December 26, 2007.

The request is **APPROVED**.

A grantable request to withdraw as attorney/agent of record must be signed by every attorney/agent seeking to withdraw or contain a clear indication that one attorney is signing on behalf of another/others. A request to withdraw will not be approved unless at least 30 (thirty) days would remain between the date of approval and the later of the expiration date of a time to file a response or the expiration date of the maximum time period which can be extended under 37 C.F.R. § 1.136(a).

The request was signed by Michael P. Dunnam on behalf of all attorneys of record who are associated with customer No. 23377. All attorneys/agents associated have been withdrawn.
Applicant is reminded that there is no attorney of record at this time.

The request to change the correspondence of record is not acceptable as the requested correspondence address is not that of: (1) the first named signing inventor; or (2) an intervening assignee of the entire interest under 37 C.F.R 3.71. All future communications from the Office will be directed to the first named signing inventor.

There is an outstanding Office action mailed March 05, 2008 that requires a reply from the applicant.

Telephone inquiries concerning this decision should be directed to the undersigned at 571-272-4231.

Michelle R. Eason
Paralegal Specialist
Office of Petitions

cc: **MARC CHARBONNEAU**
23 TERRACE SAUVA
CASSELMAN, ONTARIO
K0A 1M0, CANADA

cc: **PERKINS COIE**
1201 THIRD AVENUE
SUITE 4800
SEATTLE, WASHINGTON 98101

UNITED STATES PATENT AND TRADEMARK OFFICE

Commissioner for Patents
United States Patent and Trademark Office
P.O. Box 1450
Alexandria, VA 22313-1450
www.uspto.gov

MAILED

MAR 16 2010

OFFICE OF PETITIONS

PERKINS COIE LLP
PATENT-SEA
P.O. BOX 1247
SEATTLE WA 98111-1247

In re Application of	:	
Marc Charbonneau	:	DECISION ON
Patent Number: 7,526,654	:	APPLICATION FOR
Issue Date: 04/28/2009	:	PATENT TERM ADJUSTMENT
Application No. 09/977203	:	and
Filing or 371(c) Date: 10/16/2001	:	NOTICE OF INTENT TO ISSUE
Attorney Docket Number:	:	CERTIFICATE OF CORRECTION
320528500US	:	

This is a decision on the petition filed on June 29, 2009, which is being treated as a petition under 37 CFR 1.705(d), requesting that the patent term adjustment indicated on the above-identified patent be corrected to indicate that the term of the above-identified patent is extended or adjusted by eight hundred twenty-three (823) days.

The petition to correct the patent term adjustment indicated on the above-identified patent is **GRANTED to the extent indicated herein.**

As the period from the filing date of the request for continued examination (RCE) to the issue date of the patent is not included in the "B" delay period, the over three year period begins on October 17, 2004 and ends on May 6, 2007, the day before the RCE was filed, and is 932 (not 933) days. See, 35 U.S.C. 154(b)(1)(B)(i). As such, the patent term adjustment is 822 days, not 823 days.

The Office will *sua sponte* issue a certificate of correction. Pursuant to 37 CFR 1.322, the Office will not issue a certificate of correction without first providing assignee or patentee an opportunity to be heard. Accordingly, patentees are given **one (1) month or thirty (30) days,** whichever is longer, from the mail date of this decision to respond. No extensions of time will be granted under § 1.136.

The application is being forwarded to the Certificates of Corrections Branch for issuance of a certificate of correction. The Office will issue a certificate of correction indicating that the term of the above-identified patent is extended or adjusted by eight hundred twenty-two **(822)** days.

The Office acknowledges submission of the $200.00 fee set forth in 37 CFR 1.18(e). No additional fees are required.

Telephone inquiries specific to this matter should be directed to Attorney Derek Woods, at (571) 272-3232.

/ALESIA BROWN/

Alesia Brown
Senior Petitions Attorney
Office of Petitions

Enclosure: Copy of DRAFT Certificate of Correction

UNITED STATES PATENT AND TRADEMARK OFFICE

CERTIFICATE OF CORRECTION

PATENT : 7,526,654 B2

DATED : **April 28, 2009**

INVENTOR(S) : Charbonneau

It is certified that error appears in the above-identified patent and that said Letters Patent is hereby corrected as shown below:

On the cover page,

[*] Notice: Subject to any disclaimer, the term of this patent is extended or adjusted under 35 USC 154(b) by 153 days.

Delete the phrase "by 153 days" and insert – by 822 days--

UNITED STATES PATENT AND TRADEMARK OFFICE

COMMISSIONER FOR PATENTS
UNITED STATES PATENT AND TRADEMARK OFFICE
P.O. BOX 1450
ALEXANDRIA, VA 22313-1450
www.uspto.gov

Paper No. 7

Poh C. Chua
SHAW PITTMAN LLP
1650 Tysons Boulevard
McLean, VA 22102

MAILED

MAR 0 2 2004

Technology Center 2100

In re Application of:	)	
Richard H. Gumpertz et al.	)	
Application No. 09/977,226	)	**DECISION ON REQUEST FOR**
Filed: October 16, 2001	)	**WITHDRAWAL AS ATTORNEY**
For: SYSTEMS AND METHODS FOR REPRESENTING VARIABLE-LENGTH DIGIT STRINGS AND FOR PROVIDING HIGH-PERFORMANCE SEARCH OPERATIONS	)	

This is a decision on the Request To Withdraw from Representation filed November 18, 2003.

A grantable request to withdraw as attorney of record should indicate thereon the present mailing addresses of the attorney(s) who is/are withdrawing from the record and of the applicant. The request for withdrawal must be signed by every attorney seeking to withdraw or contain a clear indication that one attorney is signing on behalf of another/others. A request to withdraw will not be approved unless at least 30 (thirty) days would remain between the date of approval and the later of the expiration date of a time to file a response or the expiration date of the maximum time period which can be extended under 37 C.F.R. § 1. 136(a). The effective date of withdrawal being the date of decision and not the date of request. See M.P.E.P. § 402.06. 37 C.F.R. § 1.36 further requires that the applicant or patent owner be notified of the withdrawal of the attorney or agent.

The request filed November 18, 2003 meets all the requirements. Accordingly the request is **GRANTED**.

All future communications from the Office will be directed to the below-listed address until otherwise notified by applicant. This correspondence address is provided by the withdrawn attorney(s). Applicant is reminded of the obligation to promptly notify the Patent and Trademark Office (Office) of any change in correspondence address to ensure receipt of all communications from the Office.

James R. Matthews

JM Vincent N. Trans
Special Programs Examiner
Technology Center 2100
Computer Architecture and Software
(703) 305-9750

cc: Mr. Aaron Stone
APOLLO MANAGEMENT
1301 Avenues of the Americas
38th Floor
New York, NY 10019

UNITED STATES PATENT AND TRADEMARK OFFICE

Commissioner for Patents
United States Patent and Trademark Office
P.O. Box 1450
Alexandria, VA 22313-1450
www.uspto.gov

Paper No.

Beth A. Burrous
FOLEY & LARDNER
Washington Harbour
3000 K Street, N.W.,
Suite 500
Washington, DC 20007-5109

COPY MAILED
DEC 1 5 2005
OFFICE OF PETITIONS

In re Application of	:	
Ullrich et al.	:	DECISION ON APPLICATION
Application No. 09/977,260	:	FOR
Filed: October 16, 2001	:	PATENT TERM ADJUSTMENT
Atty Docket No. 038602-1260	:	

This is a decision on the "REQUEST FOR RECONSIDERATION OF PATENT TERM ADJUSTMENT UNDER CFR §1.705(b)" filed September 15, 2004. Applicants request that the initial determination of patent term adjustment under 35 U.S.C. 154(b) be corrected from zero (0) days to thirty-five (35) days.

The application for patent term adjustment is **GRANTED**.

The Office has updated the PAIR screen to reflect that the correct Patent Term Adjustment (PTA) determination at the time of the mailing of the Notice of Allowance is thirty-five (35) days. A copy of the updated PAIR screen, showing the correct determination, is enclosed.

On June 15, 2004, the Office mailed the Determination of Patent Term Adjustment under 35 U.S.C. 154(b) in the above-identified application. The Notice stated that the patent term adjustment

(PTA) to date is 0 days. The period of adjustment of 184 days for Office delay was reduced by 203 days for applicant delay. On September 15, 2004, applicants timely[1] submitted an application for patent term adjustment (with required fee), asserting that the correct number of days of PTA at the time of the mailing of the Notice of Allowance is 35 days. Applicants dispute the reduction of 143 days attributed to their delay in responding to the Notice to File Missing Parts of Application mailed November 8, 2001. Applicants state that their response was received in the Office on May 8, 2002, and thus, the delay should have led to a reduction of 89 days, not 143 days.

Applicants state that the patent issuing from the application is not subject to a terminal disclaimer.

Applicants are correct. Their response to the Notice to File Missing Parts of Application mailed November 8, 2001, is of record in the application with a date of receipt by the Office of May 8, 2002. Furthermore, the response included a complete reply to the Notice. Thus, the Office should not have assessed applicants a delay of 143 days. However, the response was filed outside of the three-month period under 37 CFR 1.704(b), three months and 89 days later. Thus, applicants failed to engage in reasonable efforts to conclude prosecution of the application by delaying in replying to the Notice to File Missing Parts of Application, but only by 89 days.

In view thereof, the correct determination of patent term adjustment at the time of the mailing of the Notice of Allowance is thirty-five (35) days.

The Office acknowledges submission of the $200.00 fee set forth in 37 CFR 1.18(e). No additional fees are required.

The Office of Patent Publication has been advised of this decision. The application is, thereby, forwarded to the Office of Patent Publications for issuance of the patent. The patent term adjustment indicated on the patent will include any additional patent term accrued for Office delay in issuing the patent.

---

[1] PALM records indicate that the Issue Fee payment was also received on September 15, 2004.

Telephone inquiries related to this decision should be directed to the undersigned at (571) 272-3219.

Nancy Johnson
Senior Petitions Attorney
Office of Petitions

UNITED STATES PATENT AND TRADEMARK OFFICE

COMMISSIONER FOR PATENTS
UNITED STATES PATENT AND TRADEMARK OFFICE
P.O. BOX 1450
ALEXANDRIA, VA 22313-1450
www.uspto.gov

Paper No.

Beth A. Burrous
FOLEY & LARDNER
Washington Harbour
3000 K Street, N.W.
Suite 500
Washington DC 20007-5109

COPY MAILED
MAY 17 2005
OFFICE OF PETITIONS

In re Application of	:	
Ullrich et al.	:	DECISION ON APPLICATION
Application No. 09/977,261	:	FOR
Filed: October 16, 2001	:	PATENT TERM ADJUSTMENT
Atty Docket No. 038602-1259	:	
	:	

This is a decision on the "REQUEST FOR RECONSIDERATION OF PATENT TERM ADJUSTMENT DETERMINATION UNDER 37 CFR §1.705(b)," filed August 13, 2004. Applicants request that the initial determination of patent term adjustment be corrected from zero (0) days to four (4) days.

The application for patent term adjustment is **GRANTED**.

The Office has updated the PAIR screen to reflect that the correct Patent Term Adjustment (PTA) determination at the time of the mailing of the Notice of Allowance is four (4) days. A copy of the updated PAIR screen, showing the correct determination, is enclosed.

On May 28, 2004, the Office mailed a Determination of Patent Term Adjustment under 35 U.S.C. 154(b) in the above-identified application. The Notice stated that the patent term adjustment (PTA) to date is 0 days. On August 13, 2004, applicants timely submitted an application for patent term adjustment (with required fee), disputing the reduction of one hundred fifty-two (152) days for failure to respond in a timely fashion to the

Notice to File Missing Parts mailed November 7, 2001. Applicants assert that their complete response was received June 7, 2002. Accordingly, the PTA should be subject to a reduction of only 120 days.

The record supports a conclusion that the patent issuing from the application is not subject to a terminal disclaimer.

The assessment of applicants' delay of 152 days has been found to be incorrect. A review of the application file reveals that applicants' response to the Notice to File Missing Parts of Application mailed November 7, 2001 (not November 8, 2001), is of record in the application with a date of receipt by the Office of June 7, 2002. Furthermore, the response was accepted as complete and proper. The response was filed outside the three-month period under 37 CFR 1.704(b), but only by 120 days. Accordingly, applicants' delay should have been assessed as 120 days.

In view thereof, the correct determination of patent term adjustment at the time of the mailing of the Notice of Allowance is four (4) days.

The Office acknowledges submission of the $200.00 fee set forth in 37 CFR 1.18(e). No additional fees are required.

The Office will forward the file to the Office of Patent Publication so that a patent can be issued.

Telephone inquiries specific to this matter should be directed to Nancy Johnson, Senior Petitions Attorney, at (571) 272-3219.

Karin Ferriter
for

Karin Ferriter
Senior Legal Advisor
Office of Patent Legal Administration
Office of Deputy Commissioner
for Patent Examination Policy

Enclosure: Copy of Revised PAIR Screen

UNITED STATES PATENT AND TRADEMARK OFFICE

COMMISSIONER FOR PATENTS
UNITED STATES PATENT AND TRADEMARK OFFICE
P.O. BOX 1450
ALEXANDRIA, VA 22313-1450
www.uspto.gov

Paper No. 8

LAW OFFICES OF DALE B. HALLING
SUITE 311
24 SOUTH WEBER ST.
COLORADO SPRINGS, CO 80903

COPY MAILED
MAR 1 6 2004
OFFICE OF PETITIONS

In re Application of :
Christopher Lockton Brandin :
Application No. 09/977,264 :
Filed: October 12, 2001 :
Attorney Docket No. NEO-0106 :

ON PETITION

This is a decision on the petition under 37 CFR 1.137(b), filed March 3, 2004, to revive the above-identified application.

The petition is **GRANTED.**

The above-identified application became abandoned for failure to reply in a timely manner to the non-final Office action mailed June 24, 2003, which set a shortened statutory period for reply of three (3) months. No extensions of time under the provisions of 37 CFR 1.136(a) were obtained. Accordingly, the application became abandoned on September 25, 2003.

The application file is being forwarded to Technology Center 2100, Art Unit 2134 for further processing.

Telephone inquiries concerning this decision should be directed to the undersigned at (703) 306-5594.

Retta Williams

Retta Williams
Petitions Examiner
Office of Petitions
Office of the Deputy Commissioner
for Patent Examination Policy

UNITED STATES PATENT AND TRADEMARK OFFICE

COMMISSIONER FOR PATENTS
UNITED STATES PATENT AND TRADEMARK OFFICE
P.O. BOX 1450
ALEXANDRIA, VA 22313-1450
www.uspto.gov

Paper No. 9

LAW OFFICES OF DALE B. HALLING
SUITE 311
24 SOUTH WEBER ST.
COLORADO SPRINGS CO 80903

COPY MAILED

MAR 1 2 2004

OFFICE OF PETITIONS

In re Application of	:	
Christopher Lockton Brandin	:	
Application No. 09/977,266	:	ON PETITION
Filed: 12 October, 2001	:	
Attorney Docket No. NEO-0107	:	

This is a decision on the petition under 37 CFR 1.137(b),[1] filed on 3 March, 2004, to revive the above-identified application.

The petition is **GRANTED**.

This application became abandoned on 25 September, 2003, for failure to timely respond to the non-final Office action mailed on 24 June, 2003, which set a three (3) month shortened statutory period for reply. No extensions of time in accordance with 37

---

[1]Effective December 1, 1997, the provisions of 37 CFR 1.137(b) now provide that where the delay in reply was unintentional, a petition may be filed to revive an abandoned application or a lapsed patent pursuant to 37 CFR 1.137(b). A grantable petition filed under the provisions of 37 CFR 1.137(b) must be accompanied by:

(1) the required reply, unless previously filed. In a nonprovisional application abandoned for failure to prosecute, the required reply may be met by the filing of a continuing application. In a nonprovisional application filed on or after June 8, 1995, and abandoned for failure to prosecute, the required reply may also be met by the filing of a request for continued examination in compliance with § 1.114. In an application or patent, abandoned or lapsed for failure to pay the issue fee or any portion thereof, the required reply must be the payment of the issue fee or any outstanding balance thereof. In an application abandoned for failure to pay the publication fee, the required reply must include payment of the publication fee.

(2) the petition fee as set forth in 37 CFR 1.17(m);

(3) a statement that the entire delay in filing the required reply from the due date for the reply until the filing of a grantable petition pursuant to 37 CFR 1.137(b) was unintentional. The Commissioner may required additional information where there is a question whether the delay was unintentional; and

(4) any terminal disclaimer (and fee as set forth in 37 CFR 1.20(d)) required pursuant to 37 CFR 1.137(c)).

CFR 1.136(a) were obtained. Notice of Abandonment was mailed on 4 February, 2004.

The application is being forwarded to Technology Center 2100 for further processing.

Telephone inquiries concerning this matter may be directed to the undersigned at (703)308-6918.

D Wood

Douglas I. Wood
Senior Petitions Attorney
Office of Petitions

UNITED STATES PATENT AND TRADEMARK OFFICE

Commissioner for Patents
United States Patent and Trademark Office
P. O. Box 1450
Alexandria, VA 22313-1450
www.uspto.gov

Paper No. 7

Townsend & Townsend and Crew
Two Embarcadero Center, 8th Floor
San Francisco, CA 94111-3834

COPY MAILED

JUL 0 9 2003

OFFICE OF PETITIONS

In re Application of
Philip T. Choong et al.
Application No. 09/977,337
Filed: October 16, 2001
Attorney Docket No. 18180.0069

DECISION GRANTING PETITION
UNDER 37 CFR 1.137(b)

This is a decision on the petition, filed June 5, 2003, under 37 CFR 1.137(f), which is being treated as a petition under 37 CFR 1.137(b) to revive the instant nonprovisional application.

The petition is **GRANTED**.

Petitioner states that the instant nonprovisional application is the subject of an application filed in a foreign country on October 11, 2002. However, the U.S. Patent and Trademark Office was unintentionally not notified of this filing within 45 days subsequent to the filing of the subject application in a foreign country.

In view of the above, this application became abandoned pursuant to 35 U.S.C. § 122(b)(2)(B)(iii) and 37 CFR 1.213(c) for failure to timely notify the Office of the filing of an application in a foreign country, or under a multilateral international agreement, that requires publication of applications 18 months after filing.

A petition under 37 CFR 1.137(b) to revive for failure to timely notify the Office of the filing of an application in a foreign country must be accompanied by:

(1) the reply which is met by the notification of such filing in a foreign country or under a multinational treaty;

(2) the petition fee as set forth in 37 CFR 1.17(m); and

(3) a statement that the entire delay in filing the required reply from the due date of the reply until

the filing of a grantable petition was unintentional.

The instant petition has been found to be in compliance with 37 CFR 1.137(b). Accordingly, the failure to timely notify the Office of a foreign or international filing within 45 days after the date of filing of such foreign or international application as provided by 35 U.S.C. § 122(b)(2)(B)(iii) and 37 CFR 1.213(c) is accepted as having been unintentionally delayed.

The previous Request and Certification under 35 U.S.C. § 122(b)(2)(B)(i) has been rescinded. A Notice Regarding Rescission of Nonpublication Request which sets forth the projected publication date of October 16, 2003 accompanies this decision on petition.

Any inquiries concerning this decision may be directed to Latrice Bond at (703) 308-6911.

This application is being forwarded to Technology Center Art Unit 2681 for examination in due course.

Latrice Bond

Latrice Bond
Paralegal Specialist
Office of Petitions
Office of the Deputy Commissioner
for Patent Examination Policy

Frances Hicks
Lead Petitions Examiner

ATTACHMENT: Notice Regarding Rescission of Nonpublication Request

UNITED STATES PATENT AND TRADEMARK OFFICE

COMMISSIONER FOR PATENTS
UNITED STATES PATENT AND TRADEMARK OFFICE
P.O. BOX 1450
ALEXANDRIA, VA 22313-1450
www.uspto.gov

Paper No. 11

TOWNSEND AND TOWNSEND AND CREW, LLP
TWO EMBARCADERO CENTER
EIGHTH FLOOR
SAN FRANCISCO CA 94111-3834

MAIL

APR 07 2004

DIRECTOR OFFICE
TECHNOLOGY CENTER 2600

In re Application of	)	
Choong, et al.	)	
Application No. 09/977,337	)	DECISION ON REQUEST TO
Filed: October 16, 2001	)	WITHDRAW FROM RECORD
For: SMART VOCODER	)	

This is a decision on the Request for Withdrawal as attorney or agent and change of address filed on March 18, 2004.

A grantable request to withdraw as attorney/agent of record must:
(1) indicate the present mailing address of the attorney(s)/agent(s) who seek(s) to withdraw, and
(2) be signed by each attorney/agent seeking to withdraw or clearly be signed on their behalf, and
(3) be *approved* at least thirty (30) days prior to the maximum extendable period for response to any outstanding Office Action, and
(4) indicate the address to which future correspondence should be mailed.

Petitioner has met all of the above. Accordingly, the request is **GRANTED**.

All attorneys/agents listed in customer number 20350 are withdrawn.

All future communications from the Office will be directed to the address listed below until otherwise notified by applicant. Applicant is reminded of the obligation to promptly notify the Patent and Trademark Office of any change in correspondence address to ensure receipt of all communications from the Office.

Dwayne D. Bost
Special Program Examiner
Technology Center 2600
Communications
(703) 305-4778

CC: Mark J. Itri, Esq.
McDermott, Will & Emery
18191 Von Karman Avenue
Suite 400
Irvine, CA 92612

UNITED STATES PATENT AND TRADEMARK OFFICE

COMMISSIONER FOR PATENTS
UNITED STATES PATENT AND TRADEMARK OFFICE
P.O. BOX 1450
ALEXANDRIA, VA 22313-1450
www.uspto.gov

JUL - 9 2004

ROYLANCE, ABRAMS, BERDO & GOODMAN, L.L.P.
1300 19TH STREET, N.W.
SUITE 600
WASHINGTON, DC 20036

In re Application of	:
Rembert Pieper et al	:
Serial No.: 09/977,358	: PETITION TO MAKE SPECIAL
Filed: October 16, 2001	:
Attorney Docket No.: 10030634-2	:

This is in response to applicants' petition filed June 9, 2004, to make the above-identified application special under the provisions of 37 CFR 1.102(d) based on infringement. The delay in acting on this petition was caused by the incorrect serial number on the petition.

Applicant has satisfied the provisions set forth in M.P.E.P. 708.02, II, relating to actual or potential infringement. Therefor the petition is **GRANTED**.

The application will be forwarded to the examiner for action on the merits commensurate with this decision.

Should there be any questions with regard to this letter please contact William R. Dixon, Jr. by letter addressed to the Director, Technology Center 1600, P.O. Box 1450, Alexandria, VA 22313-1450, or by telephone at 571-272-0519 or by facsimile transmission to the Office general facsimile number 703-872-9306.

William R. Dixon, Jr.
Special Program Examiner
Technology Center 1600

UNITED STATES PATENT AND TRADEMARK OFFICE

Commissioner for Patents
United States Patent and Trademark Office
P.O. Box 1450
Alexandria, VA 22313-1450
www.uspto.gov

Duane Morris LLP
1667 K Street, NW
Washington DC 20006

COPY MAILED
APR 17 2006
OFFICE OF PETITIONS

In re Application of Beadle et al. :
Application No. 09/977,362 :
Filing Date: October 16, 2001 :
Attorney Docket No. HAR62 001 :

Decision on Application
For Patent Term Adjustment

This is a decision in response to the "Request for Reconsideration of Patent Term Adjustment" filed February 15, 2006. The paper requests correction of the patent term adjustment from seven hundred and fifty-eight (758) days to nine hundred and forty (940) days.

The application for patent term adjustment is **granted**.

The Office has updated the PAIR screen to reflect that the correct Patent Term Adjustment (PTA) determination at the time of the mailing of the February 10, 2006 Notice of Allowance is nine hundred and forty (940) days. A copy of the updated PAIR screen, showing the correct determination, is enclosed.

On February 10, 2006, the Office mailed a Determination of Patent Term Adjustment under 35 U.S.C. 154(b) in the above-identified application. Applicants were advised that the patent term adjustment to date is 758 days. In response, applicants timely filed the instant request for reconsideration of the patent term adjustment along with payment of the fee set forth in 37 C.F.R. § 1.18(e). Applicants request that the patent term adjustment be corrected to 940 days.

Applicants assert that the Office's delay pursuant to 37 C.F.R. § 1.703(a)(2) should be calculated as 182 days, not 0 days.

The application history has been reviewed and it has been determined that the initial patent term adjustment of 758 days is incorrect.

The Office mailed a Notice of Allowance on July 5, 2005, less than four months after the applicant filed a reply under 35 U.S.C. 1.111. However, the Office had failed to enter a change of address and the Notice was mailed to an incorrect address. A "corrected" notice of allowance was mailed to the correct address on February 10, 2006. The record supports a conclusion that this re-mailing was due to an error on the part of the Office in mailing the first notice of allowance to applicant. Thus, the re-mailing of the notice of allowance does constitute a delay by the Office in the issuance of the patent within the meaning of 35 U.S.C. 154(b).

The Office's delay should be calculated using the February 10, 2006 date. Applicants' previous reply was received on April 12, 2005. The period of adjustment is 182 days, the number of days

in the period beginning on the day after the date that is four months after the date a reply under § 1.111 was filed, April 12, 2005, and ending on the date of mailing of an action to the proper address under 35 U.S.C. 132, February 10, 2006.

Applicants assert that no circumstances exist within the prosecution of this application that may be considered as resulting in a failure to engage in reasonable efforts to conclude examination of the present application.

Applicants state that the patent issuing from the application is not subject to a terminal disclaimer.

In view thereof, the correct patent term adjustment at the time of the mailing of the Notice of Allowance is 940 days (758 + 182).

The $200 fee set forth in 37 CFR 1.18(e) has been charged to petitioner's deposit account as authorized in the request. The fee is required and will not be refunded.

The application file is being forwarded to the Office of Patent Publication for issuance of the patent. The patent term adjustment shown on the patent (and in the Issue Notification mailed approximately three weeks prior to issuance) will include any additional patent term accrued pursuant to sections 1.702(a)(4) and 1.703(b).

Telephone inquiries regarding this communication should be directed to Petitions Attorney Steven Brantley at (571) 272-3203.

Nancy Johnson

Nancy Johnson
Senior Petitions Attorney
Office of Petitions

Enclosure: Copy of Revised Pair Screen

Day : Friday
Date: 4/14/2006

PALM INTRANET

Time: 16:21:36

PTA Calculations for Application: 09/977362			
Application Filing Date:	10/16/2001	PTO Delay (PTO):	758
Issue Date of Patent:		Three Years:	0
Pre-Issue Petitions:	0	Applicant Delay (APPL):	0
Post-Issue Petitions:	0	Total PTA (days):	940
PTO Delay Adjustment:	182		

File Contents History

Number	Date	Contents Description	PTO	APPL	START
34	04/14/2006	ADJUSTMENT OF PTA CALCULATION BY PTO	182		
31	02/10/2006	MAIL CORRECTED NOTICE OF ALLOWANCE			
30	02/09/2006	CORRECTED NOTICE OF ALLOWANCE			
29	02/08/2006	CORRESPONDENCE ADDRESS CHANGE			
28	07/11/2005	EXPORT TO INITIAL DATA CAPTURE			
27	07/05/2005	MAIL NOTICE OF ALLOWANCE			
26	07/05/2005	MAIL EXAMINER'S AMENDMENT			
25	06/28/2005	ISSUE REVISION COMPLETED			
24	06/28/2005	NOTICE OF ALLOWANCE DATA VERIFICATION COMPLETED			
23	06/22/2005	EXAMINER'S AMENDMENT COMMUNICATION			
22	06/15/2005	EXAMINER INTERVIEW SUMMARY RECORD (PTOL - 413)			
21	06/22/2005	NOTICE OF ALLOWABILITY			
20	06/22/2005	CASE DOCKETED TO EXAMINER IN GAU			
19	04/24/2005	DATE FORWARDED TO EXAMINER			
18	04/12/2005	RESPONSE AFTER NON-FINAL ACTION			
17	10/12/2004	INFORMATION DISCLOSURE STATEMENT (IDS) FILED			
16	11/12/2004	PRELIMINARY AMENDMENT			
15	01/12/2005	MAIL NON-FINAL REJECTION	758		-1
14	01/10/2005	NON-FINAL REJECTION			
13	12/13/2004	CASE DOCKETED TO EXAMINER IN GAU			
12	11/12/2004	WORKFLOW INCOMING AMENDMENT IFW			
11	11/01/2004	IFW TSS PROCESSING BY TECH CENTER COMPLETE			
10	03/01/2002	REFERENCE CAPTURE ON IDS			

9	12/20/2002	CASE DOCKETED TO EXAMINER IN GAU			
8	03/01/2002	INFORMATION DISCLOSURE STATEMENT (IDS) FILED			
7	03/29/2002	CASE DOCKETED TO EXAMINER IN GAU			
6	01/29/2002	TRANSFER INQUIRY TO GAU			
5	11/19/2001	APPLICATION DISPATCHED FROM OIPE			
4	11/15/2001	CORRESPONDENCE ADDRESS CHANGE			
3	11/15/2001	CORRESPONDENCE ADDRESS CHANGE			
2	10/24/2001	IFW SCAN & PACR AUTO SECURITY REVIEW			
1	10/16/2001	INITIAL EXAM TEAM NN			

Search Another: Application# Search

EXPLANATION OF PTA CALCULATION

EXPLANATION OF PTE CALCULATION

To go back use Back button on your browser toolbar.

Back to PALM | ASSIGNMENT | OASIS | Home page

UNITED STATES PATENT AND TRADEMARK OFFICE

Commissioner for Patents
United States Patent and Trademark Office
P.O. Box 1450
Alexandria, VA 22313-1450
www.uspto.gov

Paper No. 9

CHRISTOPHER J. MCDONALD, ESQ.
RUSS, AUGUST, KABAT & KENT
SUITE 522
2361 JEFFERSON DAVIS HIGHWAY
ARLINGTON, VA 22202

COPY MAILED

APR 2 8 2004

OFFICE OF PETITIONS

In re Application of	:	
Smith, Scott Carl	:	
Application No. 09/977,370	:	ON PETITION
Filed: October 16, 2001	:	
Attorney Docket No. A-7600	:	

This is a decision on the petition under 37 C.F.R. § 1.137(b), filed February 27, 2004, to revive the above-identified application.

The petition is **granted.**

This application became abandoned for failure to timely reply within three months to the final Office action mailed August 12, 2003. No extensions of time under the provisions of 37 CFR 1.136(a) were obtained. Accordingly, this application became abandoned on November 13, 2003.

Petitioner has met the requirements to revive the above-identified application pursuant to 37 CFR 1.137(b).

The Notice of Appeal filed February 27, 2004, has been entered and made of record. Accordingly, the 2-month period for filing the appeal brief, in triplicate, accompanied by the fee required by law, runs from the date of this decision.

The file is now being forwarded to Technology Center 2800 for further processing.

Telephone inquiries should be directed to the undersigned at (703) 306-0482.

Liana Chase

Liana Chase
Petitions Examiner
Office of Petitions
Office of the Deputy Commissioner
for Patent Examination Policy

UNITED STATES PATENT AND TRADEMARK OFFICE

Commissioner for Patents
United States Patent and Trademark Office
P.O. Box 1450
Alexandria, VA 22313-1450
www.uspto.gov

102004

BIRCH STEWART KOLASCH & BIRCH
P.O. BOX 747
FALLS CHURCH, VA 22040-0747

In re Application of:	:	
Yoshinobu Ono et al.	:	DECISION ON PETITION
Serial No.: 09/977,375	:	
Filed: October 16, 2001	:	
For: 3-5 GROUP COMPOUND SEMICONDUCTOR	:	
AND LIGHT-EMITTING ELEMENT	:	

This is a decision on the petition, filed September 27, 2004, to withdraw the holding of abandonment of the above-identified application.

The petition is GRANTED.

This application was held abandoned for failing to timely filed the appeal brief[1]. A Notice of Abandonment was mailed on July 28, 2004.

Petitioner states that the appeal brief was timely filed on July 19, 2004 as evidenced by a copy of the postcard receipt from the USPTO.

The file record indicates that the appeal brief was timely filed on July 17, 2004. The application was not abandoned in fact.

The Notice of Abandonment is hereby vacated and the holding of abandonment withdrawn. Inconvenience to petitioner is regretted.

The examiner will consider the appeal brief and take appropriate action.

[1] The Notice of Abandonment incorrectly indicated that the case was held abandoned for failure to respond to the final Office action.

Any inquiry regarding this decision should be directed to Hien H. Phan, Special Program Examiner, at (571) 272-1606.

James Dwyer, TC Director
Technology Center 2800
Semiconductors, Electrical and Optical
Systems and Components

UNITED STATES PATENT AND TRADEMARK OFFICE

Commissioner for Patents
United States Patent and Trademark Office
P.O. Box 1450
Alexandria, VA 22313-1450
www.uspto.gov

102004

MAY 02 2005

BIRCH STEWART KOLASCH & BIRCH
P.O. BOX 747
FALLS CHURCH, VA 22040-0747

In re Application of:
Yoshinobu Ono et al.
Serial No.: 09/977,375
Filed: October 16, 2001
For: 3-5 GROUP COMPOUND SEMICONDUCTOR AND LIGHT-EMITTING ELEMENT

DECISION ON PETITION

This is a decision on the petition, filed September 27, 2004, and resubmitted January 28, 2005, to withdraw the holding of abandonment of the above-identified application.

The petition is GRANTED.

This application was held abandoned for failing to timely filed the appeal brief[1]. A Notice of Abandonment was mailed on July 28, 2004.

Petitioner states that the appeal brief was timely filed on July 19, 2004 as evidenced by a copy of the postcard receipt from the USPTO.

The file record indicates that the appeal brief was timely filed and received on July 17, 2004. The application was not abandoned in fact.

The Notice of Abandonment is hereby vacated and the holding of abandonment withdrawn. Inconvenience to petitioner is regretted.

The examiner will consider the appeal brief and take appropriate action.

[1] The Notice of Abandonment incorrectly indicated that the case was held abandoned for failure to respond to the final Office action.

Any inquiry regarding this decision should be directed to Hien H. Phan, Special Program Examiner, at (571) 272-1606.

James Dwyer, TC Director
Technology Center 2800
Semiconductors, Electrical and Optical
Systems and Components

Fm

UNITED STATES PATENT AND TRADEMARK OFFICE

Commissioner for Patents
United States Patent and Trademark Office
P.O. Box 1450
Alexandria, VA 22313-1450
www.uspto.gov

052005

MAY 2 2005

BIRCH STEWART KOLASCH & BIRCH
P.O. BOX 747
FALLS CHURCH, VA 22040-0747

In re Application of:
Yoshinobu Ono et al.
Serial No.: 09/977,375
Filed: October 16, 2001
For: 3-5 GROUP COMPOUND SEMICONDUCTOR AND LIGHT-EMITTING ELEMENT

DECISION ON PETITION

This is a decision on the petition, filed September 27, 2004, to withdraw the holding of abandonment of the above-identified application.

The petition is GRANTED.

This application was held abandoned for failing to timely filed the appeal brief[1]. A Notice of Abandonment was mailed on July 28, 2004.

Petitioner states that the appeal brief was timely filed on July 19, 2004 as evidenced by a copy of the postcard receipt from the USPTO.

The file record indicates that the appeal brief was timely filed on July 17, 2004. The application was not abandoned in fact.

The Notice of Abandonment is hereby vacated and the holding of abandonment withdrawn. Inconvenience to petitioner is regretted.

The examiner will consider the appeal brief and take appropriate action.

[1] The Notice of Abandonment incorrectly indicated that the case was held abandoned for failure to respond to the final Office action.

Any inquiry regarding this decision should be directed to Hien H. Phan, Special Program Examiner, at (571) 272-1606.

James Dwyer, TC Director
Technology Center 2800
Semiconductors, Electrical and Optical
Systems and Components

#12

UNITED STATES PATENT & TRADEMARK OFFICE
UNDER SECRETARY OF COMMERCE FOR INTELLECTUAL PROPERTY AND DIRECTOR OF THE UNITED STATES PATENT AND TRADEMARK OFFICE
Washington, D.C. 20231

PATENT & TRADEMARK OFFICE
MAILED

AUG - 8 2002

LICENSING & REVIEW

Timothy E. Nauman Esq
Fay, Sharpe, Fagan
Minnich & McKee, LLP
Cleveland, OH 44114-2516

In re Application of:
Seema Garde et al:
For Serial No. 09/977,406

DECISION ON
REQUEST FOR
RECONSIDERATION

Filed: October 15, 2001
For: **PHARMACEUTICAL PREPARATIONS AND METHODS FOR INHIBITING TUMORS**

This is a decision on the REQUEST FOR RECONSIDERATION filed May 14, 2002, responding to the communication (FORM PTOL-456) mailed February 4, 2002.

The request has been **DENIED** to the extent indicated below.

42 U.S.C. 2182 states in part "**... useful in the production or utilization of special nuclear material or atomic energy**". A review of the application file history reveals among other things the use of a radioactive isotope "^{3}H " as disclosed in at least page 53 of the instant specification. Therefore under the directions from the Department of Energy (DOE) this application has been made available to them under 42 U.S.C. 2182 since the following subject matter relates to at least one of the following:

G. Materials, apparatus and methods concerning isotope and/or radioactive source technology including those utilizing (including responsive to) radioactive sources in:

a. Life Sciences such as medicine (diagnostic and therapeutic), ecology, disease and pest control, animal husbandry, etc.

b. Industrial processes such as food processing, sterilization, polymer production, etc.

c. Investigations of the environment or the earth

H. Instruments employing a radioactive source and/or radioactivity detector in the operation thereof.

Applicant is reminded that a response is due within forty-five days of the mailing date of the communication (FORM PTOL-456). The communication having been mailed February 4, 2002.

Joanne P. Hodge
Supervisory Legal Instruments Examiner
Licensing and Review
Patent Technology Center 3600

UNITED STATES PATENT AND TRADEMARK OFFICE

Commissioner for Patents
United States Patent and Trademark Office
P.O. Box 1450
Alexandria, VA 22313-1450
www.uspto.gov

Paper No. 12

MIRICK, O'CONNELL, DEMALLIE & LOUGEE, LLP
100 FRONT STREET
WORCESTER, MA 01608-1477

COPY MAILED

DEC 07 2004

OFFICE OF PETITIONS

In re Application of	:	
Fask et al.	:	
Application No. 09/977,422	:	ON PETITION
Filed: October 15, 2001	:	
Attorney Docket No. 16850-00007	:	

This is a decision on the petition under 37 C.F.R. § 1.137(b), filed October 10, 2004, to revive the above-identified application.

The petition is **GRANTED.**

This application became abandoned for failure to timely reply to the non-final Office action mailed July 16, 2003. No extensions of time under the provisions of 37 CFR 1.136(a) were obtained. Accordingly, this application became abandoned on October 17, 2003. A Notice of Abandonment was mailed February 25, 2004.

Petitioner has met the requirements to revive the above-identified application pursuant to 37 CFR 1.137(b).

The file is now being forwarded to Technology Center 3700 for further examination on the merits.

Telephone inquiries regarding this decision should be directed to the undersigned at (571) 272-3282.

Liana Chase
Petitions Examiner
Office of Petitions
Office of the Deputy Commissioner
for Patent Examination Policy

Under the Paperwork Reduction Act of 1995, no persons are required to respond to a collection of information unless it displays valid OMB control number.

PETITION TO ACCEPT UNINTENTIONALLY DELAYED PAYMENT OF MAINTENANCE FEE IN AN EXPIRED PATENT (37 CFR 1.378(c))

Patent Number	Issue Date (YYYY-MM-DD)	Application Number	Filing Date (YYYY-MM-DD)	Docket Number (if applicable)
6669669	2003-12-30	09977434	2001-10-12	59249-018 (INSL-116)

CAUTION: Maintenance fee (and surcharge, if any) payment must correctly identify: (1) the patent number and (2) the application number of the actual U.S. application leading to issuance of that patent to ensure the fee(s) is/are associated with the correct patent. 37 CFR 1.366(c) and (d).

SMALL ENTITY
☒ Patentee claims, or has previously claimed, small entity status. See 37 CFR 1.27.

LOSS OF ENTITLEMENT TO SMALL ENTITY STATUS
☐ Patentee is no longer entitled to small entity status. See 37 CFR 1.27(g)

NOT Small Entity		Small Entity	
Fee	Code	Fee	Code
○ 3 ½ year	(1551)	◉ 3 ½ year	(2551)
○ 7 ½ year	(1552)	○ 7 ½ year	(2552)
○ 11 ½ year	(1553)	○ 11 ½ year	(2553)

SURCHARGE
The surcharge required by 37 CFR 1.20(i)(2) (Fee Code 1558) must be paid as a condition of accepting unintentionally delayed payment of the maintenance fee.

MAINTENANCE FEE (37 CFR 1.20(e)-(g))
The appropriate maintenance fee must be submitted with this petition.

STATEMENT
THE UNDERSIGNED CERTIFIES THAT THE DELAY IN PAYMENT OF THE MAINTENANCE FEE TO THIS PATENT WAS UNINTENTIONAL

PETITIONER(S) REQUEST THAT THE DELAYED PAYMENT OF THE MAINTENANCE FEE BE ACCEPTED AND THE PATENT REINSTATED

THIS PORTION MUST BE COMPLETED BY THE SIGNATORY OR SIGNATORIES

37 CFR 1.378(d) states: "Any petition under this section must be signed by an attorney or agent registered to practice before the Patent and Trademark Office, or by the patentee, the assignee, or other party in interest."

I certify, in accordance with 37 CFR 1.4(d)(4) that I am

◉ An attorney or agent registered to practice before the Patent and Trademark Office

○ A sole patentee

○ A joint patentee; I certify that I am authorized to sign this submission on behalf of all the other patentees.

○ A joint patentee; all of whom are signing this e-petition

○ The assignee of record of the entire interest

Patent Practitioner			
A signature of the applicant or representative is required in accordance with 37 CFR 1.33 and 10.18. Please see 37 CFR 1.4(d) for the form of the signature			
Signature	/R. Anthony Diehl, Reg. No. 38432/	Date (YYYY-MM-DD)	2008-02-20
Name	R. Anthony Diehl	Registration Number	38432

This collection of information is required by 37 CFR 1.378(c). The information is required to obtain or retain a benefit by the public which is to file (and by the USPTO to process) an application. Confidentiality is governed by 35 U.S.C. 122 and 37 CFR 1.11 and 1.14. This collection is estimated to take 1 hour to complete, including gathering, preparing, and submitting the completed application form to the USPTO. Time will vary depending upon the individual case. Any comments on the amount of time you require to complete this form and/ or suggestions for reducing this burden, should be sent to the Chief Information Officer, U.S. Patent and Trademark Office, U.S. Department of Commerce, P.O. Box 1450, Alexandria, VA 22313-1450. DO NOT SEND FEES OR COMPLETED FORMS TO THIS ADDRESS. **This form can only be used when in conjunction with EFS-Web. If this form is mailed to the USPTO, it may cause delays in reinstating the patent.**

Privacy Act Statement

The Privacy Act of 1974 (P.L. 93-579) requires that you be given certain information in connection with your submission of the attached form related to a patent application or patent. Accordingly, pursuant to the requirements of the Act, please be advised that: (1) the general authority for the collection of this information is 35 U.S.C. 2(b)(2); (2) furnishing of the information solicited is voluntary; and (3) the principal purpose for which the information is used by the U.S. Patent and Trademark Office is to process and/or examine your submission related to a patent application or patent. If you do not furnish the requested information, the U.S. Patent and Trademark Office may not be able to process and/or examine your submission, which may result in termination of proceedings or abandonment of the application or expiration of the patent.

The information provided by you in this form will be subject to the following routine uses:

1. The information on this form will be treated confidentially to the extent allowed under the Freedom of Information Act (5 U.S.C. 552) and the Privacy Act (5 U.S.C. 552a). Records from this system of records may be disclosed to the Department of Justice to determine whether the Freedom of Information Act requires disclosure of these record s.

2. A record from this system of records may be disclosed, as a routine use, in the course of presenting evidence to a court, magistrate, or administrative tribunal, including disclosures to opposing counsel in the course of settlement negotiations.

3. A record in this system of records may be disclosed, as a routine use, to a Member of Congress submitting a request involving an individual, to whom the record pertains, when the individual has requested assistance from the Member with respect to the subject matter of the record.

4. A record in this system of records may be disclosed, as a routine use, to a contractor of the Agency having need for the information in order to perform a contract. Recipients of information shall be required to comply with the requirements of the Privacy Act of 1974, as amended, pursuant to 5 U.S.C. 552a(m).

5. A record related to an International Application filed under the Patent Cooperation Treaty in this system of records may be disclosed, as a routine use, to the International Bureau of the World Intellectual Property Organization, pursuant to the Patent Cooperation Treaty.

6. A record in this system of records may be disclosed, as a routine use, to another federal agency for purposes of National Security review (35 U.S.C. 181) and for review pursuant to the Atomic Energy Act (42 U.S.C. 218(c)).

7. A record from this system of records may be disclosed, as a routine use, to the Administrator, General Services, or his/her designee, during an inspection of records conducted by GSA as part of that agency's responsibility to recommend improvements in records management practices and programs, under authority of 44 U.S.C. 2904 and 2906. Such disclosure shall be made in accordance with the GSA regulations governing inspection of records for this purpose, and any other relevant (i.e., GSA or Commerce) directive. Such disclosure shall not be used to make determinations about individuals.

8. A record from this system of records may be disclosed, as a routine use, to the public after either publication of the application pursuant to 35 U.S.C. 122(b) or issuance of a patent pursuant to 35 U.S.C. 151. Further, a record may be disclosed, subject to the limitations of 37 CFR 1.14, as a routine use, to the public if the record was filed in an application which became abandoned or in which the proceedings were terminated and which application is referenced by either a published application, an application open to public inspections or an issued patent.

9. A record from this system of records may be disclosed, as a routine use, to a Federal, State, or local law enforcement agency, if the USPTO becomes aware of a violation or potential violation of law or regulation.

UNITED STATES PATENT AND TRADEMARK OFFICE

Commissioner for Patents
United States Patent and Trademark Office
P.O. Box 1450
Alexandria, VA 22313-1450
www.uspto.gov

In re Patent No. 6669669
Issue Date: December 30,2003
Application No. 09977434
Filed: October 12,2001
Attorney Docket No. 59249-018 (INSL-116)

:
:DECISION GRANTING PETITION
:UNDER 37 CFR 1.378(c)
:

This is a decision on the electronic petition, filed February 20,2008 ,under 37 CFR 1.378(c) to accept the unintentionally delayed payment of the 3.5 year maintenance fee for the above-identified patent.

The petition is GRANTED.

The maintenance fee is accepted, and the above-identified patent reinstated as of February 20,2008 . This decision also constitutes notice that the fee has been accepted. An electronic copy of the petition and this decision has been created as an entry in an Image File Wrapper. Nevertheless, petitioner should print and retain an independent copy

Telephone inquires related to this electronic decision should be directed to the Electronic Business Center at 1-866-217-9197.

UNITED STATES PATENT AND TRADEMARK OFFICE

COMMISSIONER FOR PATENTS
UNITED STATES PATENT AND TRADEMARK OFFICE
P.O. BOX 1450
ALEXANDRIA, VA 22313-1450
www.uspto.gov

MAIL

Paper No. 9

AUG 19 2004

DIRECTOR OFFICE
TECHNOLOGY CENTER 2600

COOPER & DUNHAM LLP
1185 Avenue of the Americas
New York NY 10036

In re Application of
Shigeyuki Baba, et al.
Application No. 09/977,439
Filed: October 15, 2001
For: **IMAGE CAPTURE DEVICE, A METHOD OF CAPTURING IMAGES, AN IMAGE PRODUCING DEVICE AND A METHOD OF PRODUCING IMAGES**

DECISION ON PETITION
TO WITHDRAW HOLDING OF
ABANDONMENT

This is a decision on the petition filed June 23, 2004 which is treated as a Petition to Withdraw Holding of Abandonment pursuant to 37 C.F.R.§ 1.181(a). No fee is required.

The petition is **GRANTED.**

The application was abandoned for failure to respond in a timely and effective manner to the Office Action mailed November 20, 2003. A Notice of Abandonment was mailed on June 7, 2004.

Petitioner asserts that a proper response was timely filed. In support of the petition, petitioner has submitted a copy of the applicant's response along with a copy of a date-stamped post card receipt evidencing receipt of the response within the United States Patent & Trademark Office on February 17, 2004. In addition, Applicant's response included a certificate of mailing dated February 12, 2004.

The original correspondence filed was not matched with the file and cannot be located. However, M.P.E.P. § 503 states, "[a] post card receipt which itemizes and properly identifies the papers which are being filed serves as *prima facie* evidence of receipt in the U.S.PTO of all the items listed thereon on the date stamped thereon by the PTO." Accordingly, it is concluded that the response was timely filed in the Patent and Trademark Office but not matched with the application file.

In view of the above stated reasons, the Notice of Abandonment is hereby vacated and the holding of abandonment withdrawn.

The application file is being forwarded to the Technology Center's technical support staff for entry of the amendment submitted with the petition. From there, the application file will be forwarded to the examiner for appropriate action in due course.

Dwayne D. Bost
Special Program Examiner
Technology Center 2600
Communications

UNITED STATES PATENT AND TRADEMARK OFFICE

COMMISSIONER FOR PATENTS
UNITED STATES PATENT AND TRADEMARK OFFICE
P.O. BOX 1450
ALEXANDRIA, VA 22313-1450
www.uspto.gov

DATE: August 7, 2006
TO: Certificates of Correction Branch
FROM: Diane Lee
SPE, Art Unit 2851
SUBJECT: REQUEST FOR CERTIFICATE OF CORRECTION

Please issue a Certificate of Correction in U. S. Letters Patent No. 6,717,728 as specified on the attached Certificate.

Diane Lee, SPE
Art Unit 2851

UNITED STATES PATENT AND TRADEMARK OFFICE

CERTIFICATE

Patent No. 6,717,728
Patented: 04/06/2004

On petition requesting issuance of a certificate for correction of inventorship pursuant to 35 U.S.C. 256, it has been found that the above identified patent, through error and without deceptive intent, improperly sets forth the inventorship. Accordingly, it is hereby certified that the correct inventorship of this patent is:

Andrey N. Putilin
Moscow, Russia

Andrew A. Lukyanitsa
Moscow, Russia

Diane Lee
Supervisory Patent Examiner
Art Unit 2851

UNITED STATES PATENT AND TRADEMARK OFFICE

UNITED STATES DEPARTMENT OF COMMERCE
United States Patent and Trademark Office
Address: COMMISSIONER FOR PATENTS
P.O. Box 1450
Alexandria, Virginia 22313-1450
www.uspto.gov

APPLICATION NO.	FILING DATE	FIRST NAMED INVENTOR	ATTORNEY DOCKET NO.	CONFIRMATION NO.
09/977,462	10/15/2001	Andrey N. Putilin	2513-003CIP	3701

24633 7590 08/15/2006

HOGAN & HARTSON LLP
IP GROUP, COLUMBIA SQUARE
555 THIRTEENTH STREET, N.W.
WASHINGTON, DC 20004

EXAMINER
CRUZ, MAGDA

ART UNIT	PAPER NUMBER
2851	

DATE MAILED: 08/15/2006

Please find below and/or attached an Office communication concerning this application or proceeding.

8P

UNITED STATES PATENT AND TRADEMARK OFFICE

COMMISSIONER FOR PATENTS
UNITED STATES PATENT AND TRADEMARK OFFICE
P.O. BOX 1450
ALEXANDRIA, VA 22313-1450
www.uspto.gov

In re Patent No. PUTILIN, ANDREY N. Issue Date: 04/06/2004 Appl No.: 09/977,462 Filed: October 15, 2001	**DECISION GRANTING PETITION** *37 CFR 1.324*

This is a decision on the petition filed 29 June 2004 to correct inventorship under 37 CFR 1.324.

The petition is granted.

The patented file is being forwarded to Certificate of Corrections Branch for issuance of a certificate naming only the actual inventor or inventors.

Diane Lee
Supervisory Patent Examiner
Art Unit 2851
Technology Center 2800

HOGAN & HARTSON LLP
IP GROUP, COLUMBIA SQUARE
555 THIRTEENTH STREET, N.W.
WASHINGTON, DC 20004

UNITED STATES PATENT AND TRADEMARK OFFICE

COMMISSIONER FOR PATENTS
UNITED STATES PATENT AND TRADEMARK OFFICE
P.O. BOX 1450
ALEXANDRIA, VA 22313-1450
www.uspto.gov

Kent A. Herink, Esq.
The Financial Center
Suite 2500
666 Walnut Street
Des Moines, IA 50309-3993

COPY MAILED

AUG 3 0 2004

OFFICE OF PETITIONS

In re Application of	:	
Benedikt Sas,et al.	:	
Application No. 09/977,478	:	ON PETITION
Filed: October 15, 2001	:	
Attorney Docket No. 4532670/71680 (KEM55)	:	

This is a decision on the petition under 37 CFR 1.137(b), filed May 27, 2004, to revive the above-identified application.

The petition is **GRANTED**.

Telephone inquiries concerning this decision should be directed to the undersigned at (703) 306-3475.

The application file is being referred to Technology Center 1600 for processing the Request for Continued Examination under 37 CFR 1.114 filed with the instant petition.

Marianne E. Jenkins
Petitions Examiner
Office of Petitions
Office of the Deputy Commissioner
for Patent Examination Policy

UNITED STATES PATENT AND TRADEMARK OFFICE

Commissioner for Patents
United States Patent and Trademark Office
P.O. Box 1450
Alexandria, VA 22313-1450
www.uspto.gov

Tom Van Zandt
BLAKELY, SOKOLOFF, TAYLOR & ZAFMAN LLP
Seventh Floor
12400 Wilshire Boulevard
Los Angeles, CA 90025-1026

COPY MAILED

MAR 3 1 2006

OFFICE OF PETITIONS

In re Application of

Richard L. Hudson

Application No. 09/977,509

Filed: October 12, 2001

Attorney Docket No. 42390P11897

DECISION ON PETITION

This is a decision on the petition under 37 CFR 1.137(b), filed March 24, 2006, to revive the above-identified application.

The petition is **GRANTED**.

The above-cited application became abandoned for failure to reply in a timely manner to the non-final Office action mailed March 7, 2005, which set a shortened statutory period for reply of three (3) months. Extension of the time set for reply was available pursuant to 37 CFR 1.136. No response to the non-final Office action was received within the allowable period. Accordingly, the application became abandoned on June 8, 2005. A Notice of Abandonment was mailed on September 13, 2005.

The amendment filed March 24, 2006, is noted.

The application is being forwarded to Technology 2100, GAU2195 for further processing.

Telephone inquiries concerning this decision should be directed to the undersigned at (571) 272-3222.

Kenya A. McLaughlin
Petitions Attorney
Office of Petitions

UNITED STATES PATENT AND TRADEMARK OFFICE

COMMISSIONER FOR PATENTS
UNITED STATES PATENT AND TRADEMARK OFFICE
P.O. BOX 1450
ALEXANDRIA, VA 22313-1450
www.uspto.gov

Karl F. Milde, Jr., Esq.
Milde & Hoffberg, LLP
10 Bank Street, Suite 460
White Plains, NY 10606

COPY MAILED

JUN 19 2008

OFFICE OF PETITIONS

In re Application of	:	
Chien-Tzu Hou, et. al.	:	
Application No. 09/977,585	:	DECISION ON PETITION
Filed: October 12, 2001	:	
Attorney Docket No. 1981010	:	

This is a decision on the petition under the unintentional provisions of 37 CFR 1.137(b), filed November 8, 2007 and supplemented on March 31, 2008, to revive the above-identified application.

The petition is **DISMISSED**.

Any request for reconsideration of this decision must be submitted within **TWO (2) MONTHS** from the mail date of this decision. Extensions of time under 37 CFR 1.136(a) are permitted. The reconsideration request should include a cover letter entitled "Renewed Petition under 37 CFR 1.137(b)." This is **not** a final agency action within the meaning of 5 U.S.C. § 704.

The application became abandoned for failure to timely respond to the Notice of Allowance and Fee(s) Due mailed April 11, 2005. A Notice of Abandonment was mailed on September 21, 2005.

A grantable petition under 37 CFR 1.137(b) must be accompanied by: (1) the required reply, unless previously filed; (2) the petition fee as set forth in 37 CFR 1.17(m); (3) a statement that the entire delay in filing the required reply from the due date for the reply until the filing of a grantable petition pursuant to 37 CFR 1.137(b) was unintentional; and (4) any terminal disclaimer (and fee as set forth in 37 CFR 1.20(d)) required by 37 CFR 1.137(d). Where there is a question as to whether either the abandonment or the delay in filing a petition under 37 CFR 1.137 was unintentional, the Director may require additional information. *See* MPEP 711.03(c)(II)(C) and (D). The instant petition lacks item (3).

There are three periods to be considered during the evaluation of a petition under 37 CFR 1.137(b):

(1) the delay in reply that originally resulted in the abandonment;

(2) the delay in filing an initial petition pursuant to 37 CFR 1.137(b) to revive the application; and

(3) the delay in filing a grantable petition pursuant to 37 CFR 1.137(b) to revive the application.

Currently, the delay has not been shown to the satisfaction of the Director to be unintentional for periods (1) and (2).

As to Period (1):

The patent statute at 35 U.S.C. § 41(a)(7) authorizes the Director to revive an "unintentionally abandoned application." The legislative history of Public Law 97-247 reveals that the purpose of 35 U.S.C. § 41(a)(7) is to permit the Office to have more discretion than in 35 U.S.C. §§ 133 or 151 to revive abandoned applications in appropriate circumstances, but places a limit on this discretion, stating that "[u]nder this section a petition accompanied by either a fee of $500 or a fee of $50 **would not be granted where the abandonment** or the failure to pay the fee for issuing the patent **was intentional** as opposed to being unintentional or unavoidable." [emphasis added]. See H.R. Rep. No. 542, 97th Cong., 2d Sess. 6-7 (1982), *reprinted in* 1982 U.S.C.C.A.N. 770-71. The revival of an intentionally abandoned application is antithetical to the meaning and intent of the statute and regulation.

35 U.S.C. § 41(a)(7) authorizes the Director to accept a petition "for the revival of an unintentionally abandoned application for a patent." As amended December 1, 1997, 37 CFR 1.137(b)(3) provides that a petition under 37 CFR 1.137(b) must be accompanied by a statement that the delay was unintentional, but provides that "[t]he Commissioner may require additional information where there is a question whether the delay was unintentional." Where, as here, there is a question whether the initial delay was unintentional, the petitioner must meet the burden of establishing that the delay was unintentional within the meaning of 35 U.S.C. § 41(a)(7) and 37 CFR 1.137(b). *See* In re Application of G, 11 USPQ2d 1378, 1380 (Comm'r Pats. 1989); 37 CFR 1.137(b). Here, in view of the inordinate delay (over 2 years) in resuming prosecution, there is a question whether the entire delay was unintentional. Petitioner should note that the issue is not whether some of the delay was unintentional by any party; rather, the issue is whether the entire delay has been shown to the satisfaction of the Director to be unintentional.

The question under 37 CFR 1.137(b) for period (1) is whether the delay on the part of the party having the right or authority to reply to avoid abandonment (or not reply) was unintentional.

Accordingly, any renewed petition must clearly identify the party having the right to reply to avoid abandonment on July 12, 2005. That party, in turn must explain what effort(s) was made to further reply to the outstanding Office action and, further, why no reply was filed. If no effort was made to further reply, then that party must explain why the delay in this application does not result from a deliberate course of action (or inaction). As the courts have made clear, it is pointless for the USPTO to revive a long abandoned application without an adequate showing that the delay did not result from a deliberate course of action. *See* Lawman Armor v. Simon, 2005 U.S. Dist. LEXIS 10843, 74 USPQ2d 1633 (DC EMich 2005); Field Hybrids, LLC v. Toyota Motor Corp., 2005 U.S. Dist. LEXIS 1159 (D. Minn Jan. 27, 2005); Lumenyte Int'l Corp. v. Cable Lite Corp., Nos. 96-1011, 96-1077, 1996 U.S. App. LEXIS 16400, 1996 WL 383927 (Fed. Cir. July 9, 1996) (unpublished) (patents held unenforceable due to a finding of inequitable conduct in submitting an inappropriate statement that the abandonment was unintentional).

As to Period (2):

Likewise, where the applicant deliberately chooses not to seek or persist in seeking the revival of an abandoned application, or where the applicant deliberately chooses to delay seeking the revival of an abandoned application, the resulting delay in seeking revival of the abandoned application cannot be considered as "unintentional" within the meaning of 37 CFR 1.137(b). *See* MPEP 711.03(c).

The language of both 35 U.S.C. § 41(a)(7) and 37 CFR 1.137(b) are clear and unambiguous, and, furthermore, without qualification. That is, the delay in filing the reply during prosecution, as well as in filing the petition seeking revival, must have been, without qualification, "unintentional" for the reply to now be accepted on petition. The Office requires that the entire delay be at least unintentional as a prerequisite to revival of an abandoned application to prevent abuse and injury to the public. *See* H.R. Rep. No. 542, 97th Cong., 2d Sess. 7 (1982), reprinted in 1982 U.S.C.C.A.N. 771 ("[i]n order to prevent abuse and injury to the public the Commissioner . . . could require applicants to act promptly after becoming aware of the abandonment"). The December 1997 change to 37 CFR 1.137 did not create any new right to overcome an intentional delay in seeking revival, or in renewing an attempt at seeking revival, of an abandoned application. *See* Changes to Patent Practice and Procedure; Final Rule Notice, 62 Fed. Reg. 53131, 53160 (October 10, 1997), 1203 Off. Gaz. Pat. Office 63, 87 (October 21, 1997), which clearly stated that any protracted delay (here, over 2 years) could trigger, as here, a request for additional information. As the courts have since made clear, a protracted delay in seeking revival, as here, requires a petitioner's detailed explanation seeking to excuse the delay as opposed to USPTO acceptance of a general allegation of unintentional delay. *See* Lawman Armor v. Simon, 2005 U.S. Dist. LEXIS 10843, 74 USPQ2d 1633, at 1637-8 (DC EMich 2005); Field Hybrids, LLC v. Toyota Motor Corp., 2005 U.S. Dist. LEXIS 1159 (D. Minn Jan. 27, 2005) at *21-*23. Statements are required from any and all persons and the responsible person(s) having firsthand knowledge of the circumstances surrounding the protracted delay, after the abandonment date, in seeking revival.

As noted in MPEP 711.03(c)(II), subsection D, in instances in which such petition was not filed within 1 year of the date of abandonment of the application, applicants should include:

> (A) the date that the applicant first became aware of the abandonment of the application; and
>
> (B) a showing as to how the delay in discovering the abandoned status of the application occurred despite the exercise of due care or diligence on the part of the applicant.

Petitioner states that the entire delay in filing the required reply from the due date for the reply until the filing of a grantable petition pursuant to 37 CFR 1.137(b) was unintentional. An explanation was provided by inventor Chien-Tzu Hou explaining that he first learned of the abandonment about November 1, 2007 while making a routine check of the status on the Office's website. Petitioner further explains that "this application was prepared and prosecuted by Pro-Techtor International Services of Saratoga, CA, under the direction and control of Geneticware, Co., Ltd. However, the Notice of Allowance of the Application was not reported to Geneticware, or to me, or to any other officers or agent of Geneticware and I was unaware of its allowance."

A review of the record shows that applicants, Chien-Tzu Hou and Hsiu-Ying Hsu, appointed attorney Keith Kline at Pro-Techtor International Services of Saratoga, CA to transact all business in the U.S. Patent and Trademark Office (USPTO) by way of a Power of Attorney filed on November 15, 2004. Since applicants are bound by the actions or inactions of the duly appointed attorney, Keith Kline and anyone else involved with the application at Pro-Techtor International Services, should explain why this application became abandoned while it was under their control and what efforts were made to reply and with whom this matter was discussed outside of the Office. Copies of any correspondence relating to the filing, or to not filing a further reply to the outstanding Office action are required from the responsible person, Mr. Klein and whoever else was involved with this application at the time of abandonment. Statements are required from any and all persons at Pro-Techtor International Services, and the responsible person(s) having firsthand knowledge of the circumstances surrounding the lack of a reply to the outstanding Office action.

Petitioner is advised to send a letter (accompanied by a copy of this decision) to Keith Kline at Pro-Techtor International Services, by certified or registered mail (return receipt requested) indicating that the USPTO is requesting assistance in ascertaining the cause of abandonment of the above application, and that the USPTO is requesting that Keith Kline provide within a specified period (*e.g.*, one month) a statement setting forth why appropriate action was not timely taken to prevent the application from becoming abandoned. Petitioner is advised that in the event that Keith Kline does not provide such a statement, petitioner should submit a copy of such letter and the return receipt.

The foregoing was given for information purposes only and should not be construed as a recommended course of action or that such a course of action, if undertaken, would be likely to succeed.

In either instance, applicant's failure to carry the burden of proof to establish that the "entire" delay was "unavoidable" or "unintentional" may lead to the denial of a petition under 37 CFR 1.137(b), regardless of the circumstances that originally resulted in the abandonment of the application. *See also* New York University v. Autodesk, 2007 U.S. DIST LEXIS, U.S.District LEXIS 50832, *10 -*12 (S.D.N.Y. 2007)(protracted delay in seeking revival undercuts assertion of unintentional delay).

The Power of Attorney filed on March 31, 2008 has been accepted and made of record. A copy of the Notification of Acceptance accompanies this decision.

Any renewed petition may be addressed as follows:

By mail: Mail Stop PETITION
Commissioner for Patents
P.O. Box 1450
Alexandria, VA 22313-1450

By hand: U.S. Patent and Trademark Office
Customer Service Window, Mail Stop Petitions
Randolph Building
401 Dulany Street
Alexandria, VA 22314

The centralized facsimile number is **(571) 273-8300.**

Correspondence regarding this decision may also be filed through the electronic filing system of the USPTO.

Telephone inquiries concerning this decision should be directed to the undersigned at (571) 272-3226.

Andrea Smith
Petitions Examiner
Office of Petitions

Enclosure: Notification of Acceptance of Power of Attorney

UNITED STATES PATENT AND TRADEMARK OFFICE

UNITED STATES DEPARTMENT OF COMMERCE
United States Patent and Trademark Office
Address: COMMISSIONER FOR PATENTS
P.O. Box 1450
Alexandria, Virginia 22313-1450
www.uspto.gov

APPLICATION NUMBER	FILING OR 371(C) DATE	FIRST NAMED APPLICANT	ATTY. DOCKET NO./TITLE
09/977,585	10/12/2001	Chien-Tzu Hou	1981010

CONFIRMATION NO. 2750

POA ACCEPTANCE LETTER

Karl F. Milde, Jr., Esq.
Milde & Hoffberg, LLP
10 Bank Street, Suite 460
White Plains, NY 10606

OC000000030556686

Date Mailed: 06/19/2008

NOTICE OF ACCEPTANCE OF POWER OF ATTORNEY

This is in response to the Power of Attorney filed 03/31/2008.

The Power of Attorney in this application is accepted. Correspondence in this application will be mailed to the above address as provided by 37 CFR 1.33.

/amsmith/

Office of Data Management, Application Assistance Unit (571) 272-4000, or (571) 272-4200, or 1-888-786-0101

UNITED STATES PATENT AND TRADEMARK OFFICE

Commissioner for Patents
United States Patent and Trademark Office
P.O. Box 1450
Alexandria, VA 22313-1450
www.uspto.gov

MAILED

MAR 18 2010

OFFICE OF PETITIONS

Karl F. Milde, Jr., Esq.
Milde & Hoffberg, LLP
10 Bank Street, Suite 460
White Plains, NY 10606

In re Application of
Chien-Tzu Hou, et. al.
Application No. 09/977,585
Filed: October 12, 2001
Attorney Docket No. 1981010

DECISION ON PETITION

This is a decision on the renewed petition under the unintentional provisions of 37 CFR 1.137(b), filed July 28, 2008, to revive the above-identified application.

In response to the decision mailed June 19, 2008, petitioner submits the present renewed petition on July 28, 2008.

The above-identified application has been abandoned for an extended period of time. The Patent and Trademark Office is relying on petitioner's duty of candor and good faith and accepting the statement that the entire delay in filing the required reply from the due date for the reply until the filing of a grantable petition pursuant to 37 CFR 1.137(b) was unintentional. See Changes to Patent Practice and Procedure, 62 Fed. Reg. at 53160 and 53178; 1203 Off. Gaz. Pat. Office at 88 and 103 (responses to comments 64 and 109) (applicant obligated under 37 CFR 10.18 to inquire into the underlying facts and circumstances when providing the statement required by 37 CFR 1.137(b) to the Patent and Trademark Office).

The petition satisfies the requirements of 37 CFR 1.137(b), in that, petitioner has supplied (1) the reply in the form of $720 for payment of the issue fee and $300 for payment of the publication fee; (2) the petition fee of $770; and (3) a proper statement of unintentional delay. Therefore, the petition is **GRANTED**.

This application file is being referred to the Office of Data Management for further processing into a patent.

There is no indication that petitioner has submitted a Part B-Fee(s) Transmittal form (PTOL-85). Accordingly, if petitioner desires to have the information normally found thereon printed on the patent, the attached blank Fee(s) Transmittal form should be completed and returned to the Office of Data Management within **ONE MONTH** from the mail date of this decision.

Telephone inquiries concerning this decision should be directed to the undersigned at (571) 272-3226.

Andrea Smith
Petitions Examiner
Office of Petitions

Enclosure: Blank Fee(s) Transmittal Form (PTOL-85(b))

Privacy Act Statement

The **Privacy Act of 1974 (P.L. 93-579)** requires that you be given certain information in connection with your submission of the attached form related to a patent application or patent. Accordingly, pursuant to the requirements of the Act, please be advised that: (1) the general authority for the collection of this information is 35 U.S.C. 2(b)(2); (2) furnishing of the information solicited is voluntary; and (3) the principal purpose for which the information is used by the U.S. Patent and Trademark Office is to process and/or examine your submission related to a patent application or patent. If you do not furnish the requested information, the U.S. Patent and Trademark Office may not be able to process and/or examine your submission, which may result in termination of proceedings or abandonment of the application or expiration of the patent.

The information provided by you in this form will be subject to the following routine uses:

1. The information on this form will be treated confidentially to the extent allowed under the Freedom of Information Act (5 U.S.C. 552) and the Privacy Act (5 U.S.C 552a). Records from this system of records may be disclosed to the Department of Justice to determine whether disclosure of these records is required by the Freedom of Information Act.
2. A record from this system of records may be disclosed, as a routine use, in the course of presenting evidence to a court, magistrate, or administrative tribunal, including disclosures to opposing counsel in the course of settlement negotiations.
3. A record in this system of records may be disclosed, as a routine use, to a Member of Congress submitting a request involving an individual, to whom the record pertains, when the individual has requested assistance from the Member with respect to the subject matter of the record.
4. A record in this system of records may be disclosed, as a routine use, to a contractor of the Agency having need for the information in order to perform a contract. Recipients of information shall be required to comply with the requirements of the Privacy Act of 1974, as amended, pursuant to 5 U.S.C. 552a(m).
5. A record related to an International Application filed under the Patent Cooperation Treaty in this system of records may be disclosed, as a routine use, to the International Bureau of the World Intellectual Property Organization, pursuant to the Patent Cooperation Treaty.
6. A record in this system of records may be disclosed, as a routine use, to another federal agency for purposes of National Security review (35 U.S.C. 181) and for review pursuant to the Atomic Energy Act (42 U.S.C. 218(c)).
7. A record from this system of records may be disclosed, as a routine use, to the Administrator, General Services, or his/her designee, during an inspection of records conducted by GSA as part of that agency's responsibility to recommend improvements in records management practices and programs, under authority of 44 U.S.C. 2904 and 2906. Such disclosure shall be made in accordance with the GSA regulations governing inspection of records for this purpose, and any other relevant (*i.e.*, GSA or Commerce) directive. Such disclosure shall not be used to make determinations about individuals.
8. A record from this system of records may be disclosed, as a routine use, to the public after either publication of the application pursuant to 35 U.S.C. 122(b) or issuance of a patent pursuant to 35 U.S.C. 151. Further, a record may be disclosed, subject to the limitations of 37 CFR 1.14, as a routine use, to the public if the record was filed in an application which became abandoned or in which the proceedings were terminated and which application is referenced by either a published application, an application open to public inspection or an issued patent.
9. A record from this system of records may be disclosed, as a routine use, to a Federal, State, or local law enforcement agency, if the USPTO becomes aware of a violation or potential violation of law or regulation.

PART B - FEE(S) TRANSMITTAL

Complete and send this form, together with applicable fee(s), to: Mail **Mail Stop ISSUE FEE**
Commissioner for Patents
P.O. Box 1450
Alexandria, Virginia 22313-1450
or Fax (571) 273-2885

INSTRUCTIONS: This form should be used for transmitting the ISSUE FEE and PUBLICATION FEE (if required). Blocks 1 through 5 should be completed where appropriate. All further correspondence including the Patent, advance orders and notification of maintenance fees will be mailed to the current correspondence address as indicated unless corrected below or directed otherwise in Block 1, by (a) specifying a new correspondence address; and/or (b) indicating a separate "FEE ADDRESS" for maintenance fee notifications.

CURRENT CORRESPONDENCE ADDRESS (Note: Use Block 1 for any change of address)

Note: A certificate of mailing can only be used for domestic mailings of the Fee(s) Transmittal. This certificate cannot be used for any other accompanying papers. Each additional paper, such as an assignment or formal drawing, must have its own certificate of mailing or transmission.

Certificate of Mailing or Transmission

I hereby certify that this Fee(s) Transmittal is being deposited with the United States Postal Service with sufficient postage for first class mail in an envelope addressed to the Mail Stop ISSUE FEE address above, or being facsimile transmitted to the USPTO (571) 273-2885, on the date indicated below.

(Depositor's name)
(Signature)
(Date)

APPLICATION NO.	FILING DATE	FIRST NAMED INVENTOR	ATTORNEY DOCKET NO.	CONFIRMATION NO.

TITLE OF INVENTION:

APPLN. TYPE	SMALL ENTITY	ISSUE FEE	PUBLICATION FEE	TOTAL FEE(S) DUE	DATE DUE

EXAMINER	ART UNIT	CLASS-SUBCLASS

1. Change of correspondence address or indication of "Fee Address" (37 CFR 1.363).

☐ Change of correspondence address (or Change of Correspondence Address form PTO/SB/122) attached.

☐ "Fee Address" indication (or "Fee Address" Indication form PTO/SB/47; Rev 03-02 or more recent) attached. **Use of a Customer Number is required.**

2. For printing on the patent front page, list

(1) the names of up to 3 registered patent attorneys or agents OR, alternatively,

(2) the name of a single firm (having as a member a registered attorney or agent) and the names of up to 2 registered patent attorneys or agents. If no name is listed, no name will be printed.

1 _____

2 _____

3 _____

3. ASSIGNEE NAME AND RESIDENCE DATA TO BE PRINTED ON THE PATENT (print or type)

PLEASE NOTE: Unless an assignee is identified below, no assignee data will appear on the patent. If an assignee is identified below, the document has been filed for recordation as set forth in 37 CFR 3.11. Completion of this form is NOT a substitute for filing an assignment.

(A) NAME OF ASSIGNEE (B) RESIDENCE: (CITY and STATE OR COUNTRY)

Please check the appropriate assignee category or categories (will not be printed on the patent) : ☐ Individual ☐ Corporation or other private group entity ☐ Government

4a. The following fee(s) are enclosed:

☐ Issue Fee

☐ Publication Fee (No small entity discount permitted)

☐ Advance Order - # of Copies _____

4b. Payment of Fee(s):

☐ A check in the amount of the fee(s) is enclosed.

☐ Payment by credit card. Form PTO-2038 is attached.

☐ The Director is hereby authorized by charge the required fee(s), or credit any overpayment, to Deposit Account Number _____.

5. **Change in Entity Status** (from status indicated above)

☐ a. Applicant claims SMALL ENTITY status. See 37 CFR 1.27.

☐ b. Applicant is no longer claiming SMALL ENTITY status. See 37 CFR 1.27(g)(2).

The Director of the USPTO is requested to apply the Issue Fee and Publication Fee (if any) or to re-apply any previously paid issue fee to the application identified above.
NOTE: The Issue Fee and Publication Fee (if required) will not be accepted from anyone other than the applicant; a registered attorney or agent; or the assignee or other party in interest as shown by the records of the United States Patent and Trademark Office.

Authorized Signature _____ Date _____

Typed or printed name _____ Registration No. _____

This collection of information is required by 37 CFR 1.311. The information is required to obtain or retain a benefit by the public which is to file (and by the USPTO to process) an application. Confidentiality is governed by 35 U.S.C. 122 and 37 CFR 1.14. This collection is estimated to take 12 minutes to complete, including gathering, preparing, and submitting the completed application form to the USPTO. Time will vary depending upon the individual case. Any comments on the amount of time you require to complete this form and/or suggestions for reducing this burden, should be sent to the Chief Information Officer, U.S. Patent and Trademark Office, U.S. Department of Commerce, P.O. Box 1450, Alexandria, Virginia 22313-1450. DO NOT SEND FEES OR COMPLETED FORMS TO THIS ADDRESS. SEND TO: Commissioner for Patents, P.O. Box 1450, Alexandria, Virginia 22313-1450.

Under the Paperwork Reduction Act of 1995, no persons are required to respond to a collection of information unless it displays a valid OMB control number.

UNITED STATES PATENT AND TRADEMARK OFFICE

COMMISSIONER FOR PATENTS
UNITED STATES PATENT AND TRADEMARK OFFICE
P.O. BOX 1450
ALEXANDRIA, VA 22313-1450
www.uspto.gov

OCT -7 2003

Paper No. 12

In re Application of
William Apps *et al*
Application No. 09/977,636
Filed: September 15, 2001
Attorney Docket No. RPC 0554 PUS

DECISION ON PETITION

This is a decision on the petition originally filed by facsimile transmission on August 27, 2003 and subsequently resubmitted. The duplicate submission has been discarded, see 37 CFR 1.4(b). In the petition, petitioners request withdrawal of the holding that this application stands abandoned for failure to timely file a reply to the Office letter dated August 16, 2002. No fee is required for the petition.

The petition is granted.

Petitioner alleges that the application is not abandoned because a reply to the Office letter in question was in fact filed, together with the appropriate petition for a three month extension of time and the fee therefor. The reply and extension are in fact of record in the file, and bear a filing date of March 4, 2003 and a 37 CFR 1.8(a) certificate of mailing dated February 19, 2003. As February 17, 2003 was a holiday in the District of Columbia, and as the Office was closed on February 18, 2003 due to a snow emergency, the reply and extension were in fact filed on the next available business day after the due date of February 16, 2003 and were timely filed. Therefore, it is clear that the application is not in fact abandoned.

Accordingly, the Notice of Abandonment is hereby vacated, the holding of abandonment is withdrawn, and the application is restored to pending status. The application is being forwarded to the Supervisory Patent Examiner of Art Unit 3727 who will insure that the examiner takes the application up for action as the next application acted upon.

PETITION GRANTED.

E. Rollins-Cross, Director, Patent
Examining Groups 3710 and 3720

Konstantine J. Diamond
4010 E. 26th Street
Los Angeles, CA 90023

UNITED STATES PATENT AND TRADEMARK OFFICE

COMMISSIONER FOR PATENTS
UNITED STATES PATENT AND TRADEMARK OFFICE
P.O. BOX 1450
ALEXANDRIA, VA 22313-1450
www.uspto.gov

OCT -7 2003

Paper No. 12

RECEIVED
REHRIG PACIFIC COMPANY
OCT 14 2003

In re Application of
William Apps *et al*
Application No. 09/977,636
Filed: September 15, 2001
Attorney Docket No. RPC 0554 PUS

DECISION ON PETITION

This is a decision on the petition originally filed by facsimile transmission on August 27, 2003 and subsequently resubmitted. The duplicate submission has been discarded, see 37 CFR 1.4(b). In the petition, petitioners request withdrawal of the holding that this application stands abandoned for failure to timely file a reply to the Office letter dated August 16, 2002. No fee is required for the petition.

The petition is granted.

Petitioner alleges that the application is not abandoned because a reply to the Office letter in question was in fact filed, together with the appropriate petition for a three month extension of time and the fee therefor. The reply and extension are in fact of record in the file, and bear a filing date of March 4, 2003 and a 37 CFR 1.8(a) certificate of mailing dated February 19, 2003. As February 17, 2003 was a holiday in the District of Columbia, and as the Office was closed on February 18, 2003 due to a snow emergency, the reply and extension were in fact filed on the next available business day after the due date of February 16, 2003 and were timely filed. Therefore, it is clear that the application is not in fact abandoned.

Accordingly, the Notice of Abandonment is hereby vacated, the holding of abandonment is withdrawn, and the application is restored to pending status. The application is being forwarded to the Supervisory Patent Examiner of Art Unit 3727 who will insure that the examiner takes the application up for action as the next application acted upon.

PETITION GRANTED.

E. Rollins-Cross, Director, Patent
Examining Groups 3710 and 3720

Konstantine J. Diamond
4010 E. 26th Street
Los Angeles, CA 90023

Exhibit A

UNITED STATES PATENT AND TRADEMARK OFFICE

Commissioner for Patents
United States Patent and Trademark Office
P.O. Box 1450
Alexandria, VA 22313-1450
www.uspto.gov

ANDRUS, SCEALES, STARKE & SAWALL, LLP
100 EAST WISCONSIN AVENUE, SUITE 1100
MILWAUKEE, WI 53202

COPY MAILED

DEC 21 2005

OFFICE OF PETITIONS

In re Application of

Robert F. Dierbeck

Application No. 09/977,675

Filed: October 15, 2001

Attorney Docket No. 1453-00050

DECISION ON PETITION

This is a decision on the petition under 37 CFR 1.137(b), filed October 27, 2005, to revive the above-identified application.

The petition is **GRANTED**.

The above-identified application became abandoned for failure to file a timely response to the final Office action mailed April 27, 2004. The final Office action set a shortened statutory period fro reply of three months from its mailing date. No response was received within the allowable period and the application became abandoned on July 28, 2004. A Notice of Abandonment was mailed in November 2, 2004.

The continuing application accorded application serial number 11/260,767, filed October 27, 2005, is noted.

The application file is being forwarded to Technology Center 3700, GAU 3753 for further processing.

Telephone inquiries concerning this decision should be directed to the undersigned at (571) 272-3222.

Kenya A. McLaughlin

Kenya A. McLaughlin
Petitions Attorney
Office of Petitions

UNITED STATES PATENT AND TRADEMARK OFFICE

COMMISSIONER FOR PATENTS
UNITED STATES PATENT AND TRADEMARK OFFICE
WASHINGTON, D.C. 20231
www.uspto.gov

MAIL

MAR 3 1 2003

DIRECTOR OFFICE
TECHNOLOGY CENTER 2100

Paper No. 8

Wilmer, Cutler & Pickering
2445 M Street, N.W.
Washington, DC 20037-1420

In re Application of: Joseph R. Nardone, et al.	)	
Application No. 09/977,686	)	
Filed: October 16, 2001	)	
For: RUN-TIME ENGINE IMPLEMENTED ON A COMPUTING DEVICE ALLOWING SYNCHRONIZATION OF RECORDS DURING APPLICATION EXECUTION	)	**DECISION ON REQUEST FOR WITHDRAWAL AS ATTORNEY**

This is a decision on the Request To Withdraw from Representation filed March 17, 2003.

A grantable request to withdraw as attorney of record should indicate thereon the present mailing addresses of the attorney(s) who is/are withdrawing from the record and of the applicant. The request for withdrawal must be signed by every attorney seeking to withdraw or contain a clear indication that one attorney is signing on behalf of another/others. A request to withdraw will not be approved unless at least 30 (thirty) days would remain between the date of approval and the later of the expiration date of a time to file a response or the expiration date of the maximum time period which can be extended under 37 C.F.R. § 1. 136(a). The effective date of withdrawal being the date of decision and not the date of request. See M.P.E.P. § 402.06. 37 C.F.R. § 1.36 further requires that the applicant or patent owner be notified of the withdrawal of the attorney or agent.

The request is **GRANTED**.

All future communications from the Office will be directed to the below-listed address until otherwise notified by applicant. This correspondence address is provided by the withdrawn attorney(s). Applicant is reminded of the obligation to promptly notify the Patent and Trademark Office (Office) of any change in correspondence address to ensure receipt of all communications from the Office.

Vincent N. Trans
Special Programs Examiner
Technology Center 2100
Computer Architecture and Software
(703) 305-9750

cc:Brad Aaron
Aether Systems, Inc.
11460 Cronridge Drive
Owings Mills, MD 21117

UNITED STATES PATENT AND TRADEMARK OFFICE

Commissioner for Patents
United States Patent and Trademark Office
P.O. Box 1450
Alexandria, VA 22313-1450
www.uspto.gov

td

Mailed: 1-3-06

In re application of	:	
Philippe Renard et al.	:	DECISION ON
Serial No. 09/977,698	:	PETITION
Filed: October 16, 2001	:	

For: THIN COMPOSITE LAMINATE AND USE THEREOF IN MAKING SPORTS ARTICLES, ESPECIALLY BOOTS

This is a decision on the PETITION UNDER 37 CFR 1.181 FOR ENTRY OF THE AFTER FINAL AMENDMENT filed August 23, 2005.

On July 13, 2005, a final office action was mailed to Applicants, rejecting all of the pending claims under 35 USC 112 2nd paragraph as being indefinite. Applicants responded to this office action with an amendment after final which was filed on August 23, 2005. The examiner refused entry of the amendment in an advisory action mailed September 14, 2005. A request for reconsideration was filed on September 16, 2005

On November 1, 2005, the instant petition under 37 CFR 1.181 was timely filed to request the entry of the after final amendment of August 23, 2005.

Petitioner's position is that the amendment after final did not raise any new issues as alleged by the examiner in the advisory action and that the amendment further reduces the issues for appeal.

DECISION

Section 714.13 of the MPEP states in part:

ENTRY NOT A MATTER OF RIGHT

It should be kept in mind that applicant cannot, as a matter of right, amend any finally rejected claims, add new claims after a final rejection (see 37 CFR 1.116) or reinstate previously canceled claims.
Except where an amendment merely cancels claims, adopts examiner suggestions, removes issues for appeal, or in some other way requires only a cursory review by the examiner, compliance with the requirement of a showing under 37 CFR 1.116(b)(3) is expected in all amendments after final rejection.

ACTION BY EXAMINER
See also MPEP § 706.07(f).
The refusal to enter the proposed amendment should not be arbitrary. The proposed Amendment should be given sufficient consideration to determine whether the claims are in condition for allowance and/or whether the issues on appeal are simplified.

In the final rejection mailed July 13, 2005, all of the claims were rejected under 35 USC 112 2nd paragraph as being indefinite. The examiner's position was that the phrases "significantly lower" in claim 73 and "the predetermined magnitude" in claim 74 were both indefinite. The examiner also stated that the claims would be allowable if rewritten to overcome the 35 USC 2nd paragraph rejections.

In the amendment filed on August 23, 2005, Applicants amended the claims to overcome the 35 USC 112, second paragraph rejections. Claim 25, which was indicated as allowable in the final office action was placed into claim 73 in order to make the claim definite. Applicants repeated a limitation already found in claim 74 in order to eliminate the language objected to by the examiner. In the advisory action, the examiner stated that the amendments raised new issues which would require further search and/or consideration. Specifically, the examiner stated that claim 73 was substantially amended and now requires the fibers of the core to be selected from specific material. The examiner further stated that claim 74 requires the composite layers to have specific modulus in longitudinal traction. After applicants filed a request for reconsideration, the examiner prepared another advisory action and stated that the amendments are not deemed to place the application in better form for appeal by materially reducing or simplifying the issues for appeal.

It is clear that the examiner has not properly followed the guidelines set forth in the MPEP above. With respect to the limitations added to claim 73, the examiner is clearly in error when he states, the amendment would require a new search and or consideration. The subject matter of newly amended claim 73 was already determined to be allowable by the examiner in the final office action. It is unclear as to how subject matter already determined to be allowable by the examiner would require further search and/or consideration. As for claim 74, the amendment does not change the scope of the claim in any way. The amendment merely repeats a definition already present in the claim and deletes the language that the examiner found objectionable. Presumably, the examiner had already considered the newly added language to the claim in that it was already present in the claim in an earlier portion of said claim. Once again, it is unclear as to how this could be a new issue in that the scope of the claim was not changed. As to whether the amendments place the application in better form for appeal and/or simplify the issues, it is clear that the amendments place the application in condition for allowance as recommended by the examiner in the final office action thereby simplifying the issues.

As the amendments adopted the examiner's suggestions in the final office action and should have required merely a cursory review by the examiner to recognize that the claims were placed in condition for allowance (as explained in the MPEP above), the amendments clearly should have been entered by the examiner.

Accordingly, the petition for entry of the after final amendment is **GRANTED.** The examiner is directed to enter the amendment after final and take further appropriate action.

Jacqueline M. Stone

Jacqueline M. Stone, Director
Technology Center 1700
Chemical and Materials Engineering

GREENBLUM & BERNSTEIN, P.L.C.
1950 ROLAND CLARKE PLACE
RESTON VA 20191

UNITED STATES PATENT AND TRADEMARK OFFICE

Commissioner for Patents
United States Patent and Trademark Office
P.O. Box 1450
Alexandria, VA 22313-1450
www.uspto.gov

FITZPATRICK CELLA HARPER & SCINTO
30 ROCKEFELLER PLAZA
NEW YORK, NY 10112

COPY MAILED

NOV 1 5 2005

OFFICE OF PETITIONS

ON PETITION

In re Application of	:	
Ikeda	:	
Application No. 09/977,701	:	
Filed: October 16, 2001	:	
Attorney Docket No. 03500.015877	:	

This is a decision on the petition under 37 CFR 1.181, filed August 26, 2005, to withdraw the holding of abandonment.

The petition is **granted.**

The above-identified application became abandoned for failure to reply in a timely manner to the non-final Office action mailed December 15, 2004, which set a shortened statutory period for reply of three (3) months. No extensions of time under the provisions of 37 CFR 1.136(a) were obtained. Accordingly, the above-identified application became abandoned at midnight on March 15, 2005.

Petitioner contends and has established the Office action was never received.

The December 15, 2004 Office Action is vacated and will be remailed and the time period for reply will be set from the mailing date thereof.

Technology Center 2646 will be informed of the instant decision so that the examiner can mail a new copy of the non-final Office action setting a new time period to respond.

Telephone inquiries should be directed to Petitions Attorney Steven Brantley at (703) 306-5683.

Charles Steven Brantley
Petitions Attorney
Office of Petitions

UNITED STATES PATENT AND TRADEMARK OFFICE

COMMISSIONER FOR PATENTS
UNITED STATES PATENT AND TRADEMARK OFFICE
P.O. BOX 1450
ALEXANDRIA, VA 22313-1450
WWW.USPTO.GOV

Paper No. 24

Kathleen A. Tyrrell
Licata & Tyrrell
66 E. Main Street
Marlton NJ 08053

COPY MAILED

OCT 0 3 2005

OFFICE OF PETITIONS

In re Application of
Mark I. Greene et al.
Application No. 09/977,716
Filed: October 15, 2001
Attorney Docket Number: PENN-0786
Title: METHODS FOR IMMUNO-DETECTION OF EPITOPES ON MOLECULES AND FOR DETECTION OF INTERACTIONS OF MOLECULES VIA FLUORESCENT DYES

DECISION ON PETITION UNDER 37 C.F.R. §1.137(b)

This is a decision on the petition under 37 CFR §1.137(b)[1], filed August 11, 2005, to revive the above-identified application.

The above-identified application became abandoned for failure to reply within the meaning of 37 CFR §1.112 in a timely manner to the non-final Office action mailed August 20, 2003, which set a shortened statutory period for reply of 3 months. On November 5, 2003 a response was received. A notice of informal or non-responsive amendment was mailed on December 12, 2003. No further response was received, and no extensions of time were requested. As such, the above-identified application became abandoned on November 21, 2005. A notice of abandonment was mailed on September 23, 2004.

With the present petition, Petitioner has submitted the petition fee, an amendment, and proper statement of unintentional delay.

---

1 A grantable petition pursuant to 37 CFR 1.137(b) must be accompanied by:

(1) The reply required to the outstanding Office action or notice, unless previously filed;
(2) The petition fee as set forth in § 1.17(m);
(3) A statement that the entire delay in filing the required reply from the due date for the reply until the filing of a grantable petition pursuant to this paragraph was unintentional. The Commissioner may require additional information where there is a question whether the delay was unintentional, and;
(4) Any terminal disclaimer (and fee as set forth in § 1.20(d)) required pursuant to paragraph (d) of this section.

Petitioner has met all requirements for a grantable petition under 37 C.F.R. §1.137(b). As such, the petition is **GRANTED**.

After the mailing of this decision, the application will be forwarded to Technology Center 1600 for further processing.

Telephone inquiries regarding *this decision* should be directed to the undersigned at (571) 272-3225. All other inquiries concerning examination procedures or status of the application should be directed to the Technology Center.

It is noted that the address listed on the petition differs from the address of record. The application file does not indicate a change of correspondence address has been filed in this case, although the address given on the petition differs from the address of record. If petitioner desires to receive future correspondence regarding this application, the change of correspondence address must be submitted. A courtesy copy of this decision will be mailed to petitioner. However, all future correspondence will be directed to the address of record until such time as appropriate instructions are received to the contrary. Petitioner will not receive future correspondence unless a Change of Correspondence Address Form (PTO/SB/122) is submitted for the above-identified application. A blank Change of Correspondence Address Form (PTO/SB/122) may be found at http://www.uspto.gov/web/forms/sb0122.pdf.

It is not apparent whether the person signing the statement of unintentional delay was in a position to have firsthand or direct knowledge of the facts and circumstances of the delay at issue. Nevertheless, such statement is being treated as having been made as the result of a reasonable inquiry into the facts and circumstances of such delay[2]. In the event that such an inquiry has not been made, petitioner must make such an inquiry. If such inquiry results in the discovery that the delay in paying the maintenance fee under 37 CFR 1.137(b) was intentional, petitioner must notify the Office.

Paul Shanoski
Senior Attorney
Office of Petitions
United States Patent and Trademark Office

cc: SCOLNICK, DANIEL
Cozen O'Connor
1900 Market Street
Philadelphia, PA 19103

---

2 See 37 CFR 10.18(b); cf. Changes to Patent Practice and Procedure; Final Rule Notice, 62 Fed. Reg. 53131, 53178 (October 10, 1997), 1203 Off. Gaz. Pat. Office 63, 103 (October 21, 1997).

SPE RESPONSE FOR CERTIFICATE OF CORRECTION

DATE : 102905

Paper No.: 07182005

TO SPE OF : ART UNIT 1744-SPISICH

SUBJECT : Request for Certificate of Correction on Patent No.: 6871375

A response is requested with respect to the accompanying request for a certificate of correction.

Please complete this form and return with file, within 7 days to:
Palm location **7580, Certificates of Correction Branch – South Tower – 9A22**
If response is for an IFW, **return to employee (named below) via PUBSCofC Team in MADRAS.**
With respect to the change(s) requested, correcting Office and/or Applicant's errors, should the patent read as shown in the certificate of correction (COCIN)? No new matter should be introduced, nor should the scope or meaning of the claims be changed.

Thank You For Your Assistance

ROCHAUN JOHNSON
Certificates of Correction Branch
Tel. No. 703-308-9390 EXT 119

The request for issuing the above-identified correction(s) is hereby:
Note your decision on the appropriate box.

- ☒ **Approved** — All changes apply.
- ☐ **Approved in Part** — Specify below which changes **do not** apply.
- ☐ **Denied** — State the reasons for denial below.

Comments:

John Kim
SPE

1744
Art Unit

UNITED STATES PATENT AND TRADEMARK OFFICE

Commissioner for Patents
United States Patent and Trademark Office
P.O. Box 1450
Alexandria, VA 22313-1450
www.uspto.gov

DANA L. TANGREN
WORKMAN NYDEGGER & SEELEY
1000 EAGLE GATE TOWER
60 EAST SOUTH TEMPLE
SALT LAKE CITY UT 84111

COPY MAILED

NOV 16 2009

OFFICE OF PETITIONS

In re Patent No. 6,871,375	:	
Issue Date: March 29, 2005	:	
Application No. 09/977,756	:	ON PETITION
Filed: October 15, 2001	:	
Attorney Docket No. 14711.36	:	

This is a notice regarding your request for acceptance of a fee deficiency submission under 37 CFR 1.28. On September 1, 1998, the Court of Appeals for the Federal Circuit held that 37 CFR 1.28(c) is the sole provision governing the time for correction of the erroneous payment of the issue fee as a small entity. **See DH Technology v. Synergystex International, Inc. 154 F.3d 1333, 47 USPQ2d 1865 (Fed. Cir. Sept. 1, 1998).**

The Office no longer investigates or rejects original or reissue applications under 37 CFR 1.56. **1098 Off. Gaz. Pat. Office 502 (January 3, 1989)**. Therefore, nothing in this Notice is intended to imply that an investigation was done.

Your fee deficiency submission under 37 CFR 1.28 is hereby **ACCEPTED**.

This patent is no longer entitled to small entity status. Accordingly, all future fees paid in this patent must be paid at the large entity rate.

Telephone inquiries concerning this decision should be directed to Joan Olszewski at (571) 272-7751.

/Liana Walsh/
Liana Walsh
Petitions Examiner
Office of Petitions

UNITED STATES PATENT AND TRADEMARK OFFICE

COMMISSIONER FOR PATENTS
UNITED STATES PATENT AND TRADEMARK OFFICE
P.O. BOX 1450
ALEXANDRIA, VA 22313-1450
www.uspto.gov

APR 14 2004

#10

GREGG C. BENSON
PFIZER INC.
PATENT DEPARTMENT, MS 4159
EASTERN POINT ROAD
GROTON CT 06340

In re Application of	:
Laurent Audoly et al	:
Serial No.: 09/977,761	: PETITION DECISION
Filed: October 15, 2001	:
Attorney Docket No.: PC23006A	:

This is in response to the petition under 37 CFR 1.181, filed December 3, 2003, requesting withdrawal of abandonment based on timely filing of a reply.

A review of the file history shows that the examiner mailed an Office action to applicants on March 19, 2003, setting a one month shortened statutory period for reply. Upon failure to receive a reply the application was held abandoned by Notice of Abandonment mailed October 3, 2003. Applicants state that a reply was submitted on April 21, 2003, and provide a copy of the reply and a copy of an Office date stamped return postcard showing receipt by the Office on April 28, 2003. The original reply has not been located and the copy provided with the petition will be used in lieu thereof. The reply is considered timely. In view of applicants' timely reply the Notice of Abandonment is withdrawn and the application restored to pending status with the mailing of this decision.

The petition is **GRANTED**.

The application will be forwarded to the examiner for further consideration.

Should there be any questions about this decision please contact William R. Dixon, Jr., by letter addressed to Director, TC 1600, at the address listed above, or by telephone at 571-272-0519 or by facsimile sent to the general Office facsimile number, 703-872-9306.

Bruce M. Kisliuk
Director, Technology Center 1600

UNITED STATES PATENT AND TRADEMARK OFFICE

Commissioner for Patents
United States Patent and Trademark Office
P.O. Box 1450
Alexandria, VA 22313-1450
www.uspto.gov

WHIRLPOOL PATENTS COMPANY - MD 0750
500 RENAISSANCE DRIVE - SUITE 102
ST. JOSEPH, MI 49085

MAILED

MAY 03 2010

OFFICE OF PETITIONS

In re Application of :
Dianne D. Mueller, et al. :
Application No. 09/977,775 :
Filed: October 15, 2001 :
Attorney Docket No. US20010143 :

ON PETITION

This is a decision on the petition, filed January 29, 2010, to revive the above-identified application under the provisions of 37 CFR 1.137(b).

The petition is **GRANTED**.

The application became abandoned for a failure to reply in a timely manner to the Office action under Ex parte Quale, 1935 Dec. Comm'r Pat. 11 (1935), mailed June 9, 2009, which set a shortened statutory period for reply of two (2) months. No extension of time under the provisions of 37 CFR 1.136(a) was obtained. Accordingly, the application became abandoned on August 10, 2009. A Notice of Abandonment was mailed on January 6, 2010. On January 29, 2010, present petition were filed.

The petition is not signed by a registered patent attorney or patent agent of record. However, in accordance with 37 CFR 1.34, the signature of Mr. Erin E. Dams appearing on the correspondence shall constitute a representation to the United States Patent and Trademark Office that he is authorized to represent the particular party on whose behalf he acts. If Mr. Dams desires to receive correspondence regarding this file, the appropriate power of attorney documents must be submitted. A courtesy copy of this decision is being mailed to Mr. Dams; however, until otherwise instructed, all future correspondence regarding this application file will be directed solely to the above-noted correspondence address of record.

The petition satisfies the requirements of 37 CFR 1.137(b) in that petitioner has supplied (1) the reply in the form of amendment; (2) the petition fee of $1,620; and (3) an adequate statement of unintentional delay[1].

[1] 37 CFR 1.137(b)(3) requires a statement that the entire delay in filing the required reply from the due date for the reply until the filing of a grantable petition pursuant to 37 CFR 1.137(b) was unintentional. While the statement is not made by an attorney of record, such statement is being treated as having been made as the result of a reasonable inquiry into the facts and circumstances of such delay. See 37 CFR 10.18(b) and Changes to Patent Practice and Procedure; Final Rule Notice, 62 Fed. Reg. 53131, 53178 (October 10, 1997), 1203 Off. Gaz. Pat. Office 63, 103 (October 21, 1997). In the event that such an inquiry has not been made, petitioner must make such an inquiry. If such inquiry results in the discovery that it is not correct that the entire delay in filing the required reply from the due date for the reply until the filing of a grantable petition pursuant to 37 CFR 1.137(b) was unintentional, petitioner must notify the Office.

Telephone inquiries concerning this decision may be directed to the undersigned at (571) 272-3204. All other inquiries regarding this application should be directed to the Technology Center.

The application file is being forwarded to Technology Center AU 3744 for consideration of the response filed January 29, 2010.

Sherry D. Brinkley
Petitions Examiner
Office of Petitions

cc: ERIN E. DAMS
MCGARRY BAIR PC
32 MARKET AVE., SW, SUITE 500
GRAND RAPIDS, MI 495003

UNITED STATES PATENT AND TRADEMARK OFFICE

COMMISSIONER FOR PATENTS
UNITED STATES PATENT AND TRADEMARK OFFICE
P.O. BOX 1450
ALEXANDRIA, VA 22313-1450
www.uspto.gov

#15

JOHN H. ALLIE
WOODARD, EMHARDT, MORIARTY,
MCNETT & HENRY
BANK ONE CENTER/TOWER
111 MONUMENT CIRCLE, SUITE 3700
INDIANAPOLIS IN 46204-5137

COPY MAILED

DEC 2 2 2003

OFFICE OF PETITIONS

In re Application of
John Frederick Parker et al
Application No. 09/977,804
Filed: October 15, 2001
Attorney Docket No. 8-02-6018

ON PETITION

This is a decision on the paper filed December 18, 2003, which is being treated under 37 CFR 1.181(a), to Withdraw Holding of Abandonment. This is also a decision on the petition under 37 CFR 1.313(c)(2) to withdraw the above-identified application from issue after payment of the issue fee.

The petition under 37 CFR 1.181(a) is **GRANTED**.

The petition under 37 CFR 1.313(c)(2) is **GRANTED**.

The application was held abandoned for failure to timely pay the issue fee on or before June 30, 2003 and respond to the Office letter of May 15, 2003.

A review of the file record do show that the requirements were submitted by Certificate of Mailing on June 30, 2003.

In view of the above, the holding of abandonment is hereby withdrawn and the application restored to pending status.

As to the petition under 37 CFR 1.313(c)(2):

The above-identified application is withdrawn from issue for consideration of a submission under 37 CFR 1.114 (request for continued examination). See 37 CFR 1.313(c)(2).

Petitioner is advised that the issue fee paid on July 3, 2003 in the above-identified application cannot be refunded. If, however, the above-identified application is again allowed, petitioner may request that it be applied towards the issue fee required by the new Notice of Allowance.[1]

---

[1] The request to apply the issue fee to the new Notice may be satisfied by completing and returning the new Issue Fee Transmittal Form PTOL-85(b), which includes the following language thereon: "Commissioner for Patents is requested to apply the Issue Fee and Publication Fee (if any) or re-apply any previously paid issue fee to the application identified above." Petitioner is advised that, whether a fee is

Telephone inquiries should be directed to the undersigned at (703) 305-8859.

After receipt of the file in the Office of Petitions, the application will be forwarded to Technology Center AU 3748 for processing of the request for continued examination under 37 CFR 1.114.

Karen Creasy

Karen Creasy
Petitions Examiner
Office of Petitions
Office of the Deputy Commissioner
for Patent Examination Policy

---

indicated as being due or not, the Issue Fee Transmittal Form **must** be completed and timely submitted to avoid abandonment. Note the language in bold text on the first page of the Notice of Allowance and Fee(s) Due (PTOL-85).

UNITED STATES PATENT AND TRADEMARK OFFICE

Commissioner for Patents
United States Patent and Trademark Office
P.O. Box 1450
Alexandria, VA 22313-1450
www.uspto.gov

Salvatore J. Abbruzzese
Hoffman & Baron, LLP
6900 Jericho Turnpike
Syosset, NY 11791

COPY MAILED

APR 0 7 2009

OFFICE OF PETITIONS

In re Application of	:	
James J. Rudnick et al.	:	
Application No. 09/977,823	:	DECISION ON
Filed: October 15, 2001	:	PETITION TO WITHDRAW
Attorney Docket No. 498-67 CON3	:	FROM RECORD
	:	

This is a decision on the Request to Withdraw as attorney or agent of record under 37 C.F.R. § 1.36(b), filed March 19, 2009.

The request is **NOT APPROVED**.

A review of the file record indicates that Anna-lisa L. Gallo does not have power of attorney in this patent application nor is there any statement or evidence of record of employment in or otherwise being engaged in the proceedings in this patent application. Accordingly, the request to withdraw under 37 C.F.R. § 1.36(b) is not applicable.

All future communications from the Office will continue to be directed to the above-listed address until otherwise properly notified by the applicant.

Telephone inquires concerning this decision should be directed to Kimberly Inabinet at 571-272-4618.

Kimberly Inabinet
Petitions Examiner
Office of Petitions

UNITED STATES PATENT AND TRADEMARK OFFICE

Commissioner for Patents
United States Patent and Trademark Office
P.O. Box 1450
Alexandria, VA 22313-1450
www.uspto.gov

Paper 15

STATTLER JOHANSEN & ADELI
P O BOX 51860
PALO ALTO CA 94303

COPY MAILED

OCT 0 8 2004

OFFICE OF PETITIONS

In re Application of
Jeffrey Charles Hawkins et al.
Application No. 09/977,867
Filed: October 14, 2001
Attorney Docket No.: HAND.P0011

DECISION ON PETITION

This is a decision on the petition under 37 CFR 1.137(a), filed September 3, 2004, to revive the above-identified application.

The petition is **DISMISSED**.

Any request for reconsideration of this decision must be submitted within TWO (2) MONTHS from the mail date of this decision. Extensions of time under 37 CFR 1.136(a) are permitted. The reconsideration request should include a cover letter entitled "Renewed Petition under 37 CFR 1.137(a)" or "Renewed Petition under 37 CFR 1.137(b)." This is not a final agency decision.

This application became abandoned on March 30, 2004, for failure to pay the issue fee in response to the Notice of Allowance mailed December 29, 2003 and which set a three (3) month period for reply. Accordingly, a Notice of Abandonment was mailed June 24, 2004.

Petitioner asserts that the Notice of Allowance was never received.

A grantable petition to revive an abandoned application under 37 CFR 1.137(a) must be accompanied by:

> (1) the required reply, unless previously filed. In a nonprovisional application abandoned for failure to prosecute, the required reply may be met by the filing of a continuing application. In a nonprovisional application filed on or after June 8, 1995, and abandoned for failure to prosecute, the required reply may also be met by the filing of a request for continued examination in compliance with § 1.114. In an application or patent, abandoned or lapsed for failure to pay the issue fee or any portion thereof, the required reply must be the payment of the issue fee or any outstanding balance thereof;

(2) the petition fee as set forth in § 1.17(l);
(3) a showing to the satisfaction of the Commissioner that the entire delay in filing the required reply from the due date for the reply until the filing of a grantable petition pursuant to this paragraph was unavoidable; and
(4) any terminal disclaimer (and fee as set forth in § 1.20(d)) required pursuant to paragraph (c) of this section.

This petition lacks items (3) above.

With regard to item (3), decisions on reviving abandoned applications on the basis of "unavoidable" delay have adopted the reasonably prudent person standard in determining if the delay was unavoidable:

> The word 'unavoidable' . . . is applicable to ordinary human affairs, and requires no more or greater care or diligence than is generally used and observed by prudent and careful men in relation to their most important business. It permits them in the exercise of this care to rely upon the ordinary and trustworthy agencies of mail and telegraph, worthy and reliable employees, and such other means and instrumentalities as are usually employed in such important business. If unexpectedly, or through the unforeseen fault or imperfection of these agencies and instrumentalities, there occurs a failure, it may properly be said to be unavoidable, all other conditions of promptness in its rectification being present.[1]

The showing of record is inadequate to establish unavoidable delay within the meaning of 37 CFR 1.137(a). Specifically, an application is "unavoidably" abandoned only where petitioner, or counsel for petitioner, takes all action necessary for a proper response to the outstanding Office action, but through the intervention of unforeseen circumstances, such as failure or mail, telegraph, telefacsimile, or the negligence of otherwise reliable employees, the response is not timely received in the Office.[2]

Petitioner asserts that the Notice mailed December 29, 2003, was never received. A review of the record indicates no irregularity in the mailing of the Office action, and in

---

[1] In re Mattullath, 38 App. D.C. 497, 514-15 (1912)(quoting Ex parte Pratt, 1887 Dec. Comm'r Pat. 31, 32-33 (1887)); see also Winkler v. Ladd, 221 F. Supp. 550, 552, 138 USPQ 666, 167-68 (D.D.C. 1963), aff'd, 143 USPQ 172 (D.C. Cir. 1963); Ex parte Henrich, 1913 Dec. Comm'r Pat. 139, 141 (1913). In addition, decisions on revival are made on a "case-by-case basis, taking all the facts and circumstances into account." Smith v. Mossinghoff, 671 F.2d 533, 538, 213 USPQ 977, 982 (D.C. Cir. 1982). Finally, a petition cannot be granted where a petitioner has failed to meet his or her burden of establishing that the delay was "unavoidable." Haines v. Quigg, 673 F. Supp. 314, 316-17, 5 USPQ2d 1130, 1131-32 (N.D. Ind. 1987).

[2] Ex parte Pratt, 1887 Dec. Comm'r Pat. 31 (Comm'r Pat. 1887).

the absence of any irregularity in the mailing, there is a strong presumption that the Office action was properly mailed to the address of record. This presumption may be overcome by a showing that the Office action was not in fact received. The showing required to establish the failure to receive an Office action must include a statement from the inventor that the Office communication was not received and attesting to the fact that a search of the docket records indicates that the Office communication was not received. A copy of the docket record where the non-received Office communication would have been entered had it been received and docketed must be attached to and referenced in petitioner's statement.[3]

Petitioner has not submitted additional evidence to corroborate the allegation of non-receipt. As the showing presented is insufficient to establish unavoidable delay within the meaning of 35 U.S.C. § 133 and 37 CFR 1.137(a), the petition will be dismissed.

ALTERNATIVE VENUE

Petitioner may wish to consider filing a renewed petition under 37 CFR 1.137(b),[4] which now provides that where the delay in reply was unintentional, a petition may be filed to revive an abandoned application or a lapsed patent pursuant to 37 CFR 1.137(b).

The filing of a petition under the unintentional standard cannot be intentionally delayed and therefore should be filed promptly. A person seeking revival due to unintentional delay cannot make a statement that the delay was unintentional unless the entire delay,

---

[3]M.P.E.P. § 711.03(c); See Notice entitled "Withdrawing the Holding of Abandonment When Office Actions Are Not Received," 1156 O.G. 53 (November 16, 1993).

[4]Effective December 1, 1997, the provisions of 37 CFR 1.137(b) now provide that where the delay in reply was unintentional, a petition may be filed to revive an abandoned application or a lapsed patent pursuant to 37 CFR 1.137(b). A grantable petition filed under the provisions of 37 CFR 1.137(b) must be accompanied by:

(1) the required reply, unless previously filed. In a nonprovisional application abandoned for failure to prosecute, the required reply may be met by the filing of a continuing application. In a nonprovisional application filed on or after June 8, 1995, and abandoned for failure to prosecute, the required reply may also be met by the filing of a request for continued examination in compliance with § 1.114. In an application or patent, abandoned or lapsed for failure to pay the issue fee or any portion thereof, the required reply must be the payment of the issue fee or any outstanding balance thereof. In an application abandoned for failure to pay the publication fee, the required reply must include payment of the publication fee.

(2) the petition fee as set forth in 37 CFR 1.17(m);

(3) a statement that the entire delay in filing the required reply from the due date for the reply until the filing of a grantable petition pursuant to 37 CFR 1.137(b) was unintentional. The Commissioner may required additional information where there is a question whether the delay was unintentional; and

(4) any terminal disclaimer (and fee as set forth in 37 CFR 1.20(d)) required pursuant to 37 CFR 1.137©)).

including the delay from the date it was discovered that the application was abandoned until the filing of the petition to revive under 37 CFR 1.137(b), was unintentional. A statement that the delay was unintentional is not appropriate if petitioner intentionally delayed the filing of a petition for revival under 37 CFR 1.137(b).

Further correspondence with respect to this matter should be addressed as follows:

By mail: Mail Stop Petitions
Commissioner for Patents
P.O. Box 1450
Alexandria VA 22313-1450

By FAX: (703)308-6916
Attn: Office of Petitions

Telephone inquiries concerning this matter may be directed to the undersigned Petitions Attorney at (571) 272-3212.

Patricia Faison-Ball

Patricia Faison-Ball
Senior Petitions Attorney
Office of Petitions

UNITED STATES PATENT AND TRADEMARK OFFICE

Commissioner for Patents
United States Patent and Trademark Office
P.O. Box 1450
Alexandria, VA 22313-1450
www.uspto.gov

STATTLER JOHANSEN & ADELI
P O BOX 51860
PALO ALTO CA 94303

COPY MAILED

JAN 18 2005

OFFICE OF PETITIONS

ON PETITION

In re Application of
Jeffrey Charles Hawkins et al.
Application No. 09/977,867
Filed: October 14, 2001
Attorney Docket No. HAND.P0011

This is a decision on the petition filed November 22, 2004 under 37 CFR 1.137 (b) to revive the above-identified application.

The petition under 37 CFR 1.137 (b) is **GRANTED**.

This application became abandoned for failure to timely pay the issue fee on or before March 29, 2004. This application became abandoned March 30, 2004. Accordingly, a Notice of Abandonment was mailed June 24, 2004.

Since the Issue Fee Transmittal Form (PTOL-85b) has not been supplied, if petitioner desires to have the information normally found thereon printed on the patent, the attached blank Issue Fee Transmittal Form should be completed and returned to the Publishing Division within ONE (1) MONTH from the mail date of this decision.

This application is being forwarded to the Publishing Division to be processed into a patent.

Telephone inquiries concerning this matter should be directed to the undersigned Petitions Attorney at (571) 272-3212.

Patricia Faison-Ball

Patricia Faison-Ball
Senior Petitions Attorney
Office of Petitions

Attachment: Blank Issue Fee Transmittal, (PTOL-85B)

SPE RESPONSE FOR CERTIFICATE OF CORRECTION

Paper No.: _____

DATE : 2-14-06

TO SPE OF : ART UNIT 2674

SUBJECT : Request for Certificate of Correction on Patent No.: 6975304

A response is requested with respect to the accompanying request for a certificate of correction.

Please complete this form and return with file, within 7 days to:
Palm location **7580, Certificates of Correction Branch – South Tower – 9A22**
If response is for an IFW, **return to employee (named below) via PUBSCofC Team in MADRAS.**
With respect to the change(s) requested, correcting Office and/or Applicant's errors, should the patent read as shown in the certificate of correction (COCIN)? No new matter should be introduced, nor should the scope or meaning of the claims be changed.

Note: Date 1-18-05 IDS

Valerie Jackson

Thank You For Your Assistance

Certificates of Correction Branch
Tel. No. 703-308-9390 ext. 114

The request for issuing the above-identified correction(s) is hereby:
Note your decision on the appropriate box.

- ☒ **Approved** — **All** changes apply.
- ☐ **Approved in Part** — Specify below which changes **do not** apply.
- ☐ **Denied** — State the reasons for denial below.

Comments:

The COC has been approved, as noted in the PTO-90 included in this red action folder.

Sumati Lefkowitz
SUMATI LEFKOWITZ
SUPERVISORY PATENT EXAMINER
SPE

2629
Art Unit

UNITED STATES PATENT AND TRADEMARK OFFICE

Commissioner for Patents
United States Patent and Trademark Office
P.O. Box 1450
Alexandria, VA 22313-1450
www.uspto.gov

STATTLER JOHANSEN & ADELI
P O BOX 51860
PALO ALTO, CA 94303

COPY MAILED

JUN 09 2005

OFFICE OF PETITIONS

In re Application of
Jeffrey Charles Hawkins et al
Application No. 09/977,871
Filed: October 14, 2001
Attorney Docket No. HAND.P0013

: DECISION ON PETITION
: UNDER 37 CFR 1.78(a)(3)

This is a decision on the petition under 37 CFR 1.78(a)(3), filed April 20, 2005, to accept an unintentionally delayed claim under 35 U.S.C. § 120 for the benefit of priority to the prior-filed nonprovisional application set forth in the amendment filed concurrently with the instant petition.

The petition is **GRANTED**.

A petition for acceptance of a claim for late priority under 37 CFR 1.78(a)(3) is only applicable to those applications filed on or after November 29, 2000. Further, the petition is appropriate only after the expiration of the period specified in 37 CFR 1.78(a)(2)(ii). In addition, the petition under 37 CFR 1.78(a)(3) must be accompanied by:

(1) the reference required by 35 U.S.C. § 120 and 37 CFR 1.78(a)(2)(i) of the prior-filed application, unless previously submitted;
(2) the surcharge set forth in § 1.17(t); and
(3) a statement that the entire delay between the date the claim was due under 37 CFR 1.78(a)(2)(ii) and the date the claim was filed was unintentional. The Commissioner may require additional information where there is a question whether the delay was unintentional.

The instant nonprovisional application was filed after November 29, 2000, and the claim herein for the benefit of priority to the prior-filed nonprovisional application is submitted after expiration of the period specified in 37 CFR 1.78(a)(2)(ii). Therefore, this is a proper petition under 37 CFR 1.78(a)(3).

The petition complies with the requirements for a grantable petition under 37 CFR 1.78(a)(3) in that (1) a reference to the prior-filed nonprovisional application has been included in an amendment to the first sentence of the specification following the title, as provided by 37 CFR 1.78(a)(2)(iii); (2) the surcharge fee required by 37 CFR 1.17(t) has been previously submitted;

and (3) the petition contains a proper statement of unintentional delay. Accordingly, having found that the instant petition for acceptance of an unintentionally delayed claim for the benefit of priority under 35 U.S.C. § 120 to the prior-filed nonprovisional application satisfies the conditions of 37 CFR 1.78(a)(3), the petition is granted.

The granting of the petition to accept the delayed benefit claim to the prior-filed application under 37 CFR 1.78(a)(3) should not be construed as meaning that the instant application is entitled to the benefit of the prior-filed application. In order for the instant application to be entitled to the benefit of the prior-filed application, all other requirements under 35 U.S.C. § 120 and 37 CFR 1.78(a)(1) and (a)(2) must be met. Similarly, the fact that the corrected Filing Receipt accompanying this decision on petition includes the prior-filed application should not be construed as meaning that applicants are entitled to the claim for benefit of priority to the prior-filed application noted thereon. Accordingly, the examiner will, in due course, consider this benefit claim and determine whether the instant application is entitled to the benefit of the earlier filing date.

A corrected Filing Receipt, which includes the priority claim to the prior-filed nonprovisional application, accompanies this decision on petition.

Any inquiries concerning this decision may be directed to Wan Laymon at (571) 272-3220. All other inquiries concerning either the examination procedures or status of the application should be directed to the Technology Center.

This matter is being referred to Technology Center Art Unit 2173 for processing of the Request for Continued Examination (RCE) filed on May 19, 2005 and for appropriate action on the amendments filed April 20, 2005 and May 19, 2005, including consideration by the examiner of applicants' entitlement to claim benefit of priority under 35 U.S.C. § 120 to the prior-filed nonprovisional application.

Frances Hicks

Frances Hicks
Lead Petitions Examiner
Office of Petitions
Office of the Deputy Commissioner
for Patent Examination Policy

ATTACHMENT: Corrected Filing Receipt

UNITED STATES PATENT AND TRADEMARK OFFICE

UNITED STATES DEPARTMENT OF COMMERCE
United States Patent and Trademark Office
Address: COMMISSIONER FOR PATENTS
P.O. Box 1450
Alexandria, Virginia 22313-1450
www.uspto.gov

Kilyk & Bowersox, P.L.L.C.
400 Holiday Court
Suite 102
Warrenton, VA 20186

Mail Date: 04/21/2010

Applicant	: Barry Charles Holdstock	: DECISION ON REQUEST FOR
Patent Number	: 7645846	: RECALCULATION of PATENT
Issue Date	: 01/12/2010	: TERM ADJUSTMENT IN VIEW
Appliction No	: 09/977,880	: OF WYETH AND NOTICE OF INTENT TO
Filed	: 10/15/2001	: ISSUE CERTIFICATE OF CORRECTION
		:

The Request for Recalculation is **GRANTED** to the extent indicated.

The patent term adjustment has been determined to be **1355** days. The USPTO will *sua sponte* issue a certificate of correction reflecting the amount of PTA days determined by the recalculation.

Prior to the issuance of the certificate of correction, the USPTO will afford patentee an opportunity to be heard and request reconsideration. Accordingly, patentee has **one month or thirty (30) days**, whichever is longer, to file a request for reconsideration of this patent term adjustment calculation. See 35 U.S.C. 154(b)(3)(B)(ii) and 37 CFR 1.322(a)(4). No extensions of time will be granted under 37 CFR 1.136.

Patentee should use document code PET.OP if electronically filing a request for reconsideration of this patent term adjustment calculation. The patentee must also include the information required by 37 CFR 1.705(b)(2) and the fee required by 37 CFR 1.18(e). If patentee does not file a timely request for reconsideration of this patent term adjustment calculation including the information required by 37 CFR 1.705(b)(2) and the fee required by 37 CFR 1.18(e), the USPTO will issue a certificate of correction reflecting the PTA determination noted above.

Patentee should be aware that in order to preserve the right to review in the United States District Court for the District of Columbia of the USPTO patent term adjustment determination, patentee must ensure that he or she also take the steps required under 35 U.S.C. 154(b)(4)(A) in a timely manner. Nothing in the request for recalculation should be construed as providing an alternative time frame for commencing a civil action under 35 U.S.C. 154(b)(4)(A).

Any questions concerning this decision should be directed to the Office of Patent Legal Administration at 571-272-7702.

UNITED STATES PATENT AND TRADEMARK OFFICE

COMMISSIONER FOR PATENTS
UNITED STATES PATENT AND TRADEMARK OFFICE
P.O. BOX 1450
ALEXANDRIA, VA 22313-1450
www.uspto.gov

Paper No. 7

HEDMAN & COSTIGAN, P.C.
1185 AVENUE OF THE AMERICAS
NEW YORK, NY 10036

COPY MAILED

AUG 1 5 2006

OFFICE OF PETITIONS

In re Application of	:	
Luigi Reguzzi	:	
Application No. 09/977,884	:	ON PETITION
Filed: October 15, 2001	:	
Attorney Docket No. N/A	:	

This is a decision on the petition, filed January 30, 2006[1], which is being treated as a petition under 37 CFR 1.181 to withdraw the holding of abandonment.

Office records show that a non-final Office action was mailed on October 3, 2003. Since no reply was received before the expiration of the three-month statutory period for reply, the application was held abandoned and a Notice to that effect was mailed on June 22, 2004.

Petitioner asserts that the non-final Office action mailed October 3, 2003 was never received.

A review of the application file reveals no irregularities in the mailing of the Office action mailed October 3, 2003. Thus, there is a strong presumption that the correspondence was properly mailed to the correspondence address of record. In the absence of irregularities in the mailing of the Office action, petitioner must submit evidence to overcome this presumption. The showing required to establish non-receipt of an Office communication must include a statement from the practitioner stating that the Office communication was not received and attesting to the fact that a search of the file jacket and docket records indicate that the Office communication was not received. In addition, a copy of the docket record where the non-received communication would have been entered had it been received and docketed must be attached to and referenced in practitioner's statement.

[1] Petitioner provided the Office with a copy of the stamped postcard receipt, which shows that the USPTO received the original petition on July 1, 2004; subsequently, it was misplaced within the Office.

Since petitioner has supported his claim of non-receipt with such evidence, the petition is **GRANTED**.

In view thereof, the notice of abandonment mailed June 22, 2004 is hereby **VACATED**, and the holding of abandonment is hereby **WITHDRAWN**.

No fee is required for a petition under 37 CFR 1.181 and no petition fee has been charged to petitioner's deposit account.

Technology Center Art Unit 3722 has been advised of this decision. The application file is being forwarded to Technology Center Art Unit 3722 for re-mailing of the non-final Office action mailed October 3, 2003, and for restarting the period for reply.

Telephone inquiries concerning this decision should be directed to the undersigned at (571) 272-3226.

Andrea Smith
Petitions Examiner
Office of Petitions

SPE RESPONSE FOR CERTIFICATE OF CORRECTION

Paper No.: _____

DATE : August 31, 2009

TO SPE OF : ART UNIT 2124
SUBJECT : Request for Certificate of Correction for Appl. No.: 09977985 /6910057

Please respond to this request for a certificate of correction within 7 days.

FOR IFW FILES:

Please review the requested changes/corrections as shown in the **COCIN** document(s) in the IFW application image. No new matter should be introduced, nor should the scope or meaning of the claims be changed.

Please complete the response (see below) and forward the completed response to scanning using document code **COCX**.

FOR PAPER FILES:

Please review the requested changes/corrections as shown in the attached certificate of correction. Please complete this form (see below) and forward it with the file to:

Certificates of Correction Branch (CofC)
South Tower - 9A22
Palm Location 7580

Magdalene Talley
Certificates of Correction Branch
703-308-9390 ext. 120

Thank You For Your Assistance

The request for issuing the above-identified correction(s) is hereby:
Note your decision on the appropriate box..

/TM/
2/15/10

- ☒ **Approved** — **All** changes apply.
- ☐ **Approved in Part** — Specify below which changes **do not** apply.
- ☐ **Denied** — State the reasons for denial below.

Comments: _____

SUPERVISORY PATENT EXAMINER

SPE — Art Unit 2193

UNITED STATES PATENT AND TRADEMARK OFFICE

Commissioner for Patents
United States Patent and Trademark Office
P.O. Box 1450
Alexandria, VA 22313-1450
www.uspto.gov

CROWELL & MORING, L.L.P.
P.O. BOX 14300
WASHINGTON, DC 20044-4300

COPY MAILED
NOV 21 2006
OFFICE OF PETITIONS

In re Application of :
Koichi Ono, et al. :
Application No. 09/978,059 : ON PETITION
Filed: October 17, 2001 :
Attorney Docket No.: 381HI/44039DV :

This is a decision on the petition, filed November 16, 2006, under 37 CFR 1.313(c)(2) to withdraw the above-identified application from issue after payment of the issue fee.

The petition is **GRANTED**.

The above-identified application is withdrawn from issue for consideration of a submission under 37 CFR 1.114 (request for continued examination). See 37 CFR 1.313(c)(2).

Petitioner is advised that the issue fee paid on September 8, 2006, in the above-identified application, cannot be refunded. If, however, the above-identified application is again allowed, petitioner may request that it be applied towards the issue fee required by the new Notice of Allowance. [1]

Telephone inquiries relating to this decision should be directed to the undersigned at (571) 272-3204.

The application is being referred to Technology Center AU 2621 for further processing of the request for continued examination under 37 CFR 1.114.

Sherry D. Brinkley
Petitions Examiner
Office of Petitions

[1]The request to apply the issue fee to the new Notice may be satisfied by completing and returning the new Issue Fee Transmittal Form PTOL-85(b), which includes the following language thereon: " Commissioner for Patents is requested to apply the Issue Fee and Publication Fee (if any) or re-apply any previously paid issue fee to the application identified above." Petitioner is advised that, whether a fee is indicated as being due or not, the Issue Fee Transmittal Form **must** be completed and timely submitted to avoid abandonment. Note the language in bold text on the first page of the Notice of Allowance and Fee(s) Due (PTOL-85).

UNITED STATES PATENT AND TRADEMARK OFFICE

Commissioner for Patents
United States Patent and Trademark Office
P.O. Box 1450
Alexandria, VA 22313-1450
www.uspto.gov

MAIL

NOV 2 2005

DIRECTOR OFFICE
TECHNOLOGY CENTER 2600

SUGHRUE MION ZINN MACPEAK & SEAS, PLLC
2100 Pennsylvania Avenue, NW
Washington DC 20037-3213

In re Application of:
Yoshihisa Itoh, et al.
Application Serial No.: 09/978,076
Filed: October 17, 2001
For: **HOLOGRAM RECORDING AND REPRODUCING APPARATUS**

SUA SPONTE
DECISION WITHDRAWING
HOLDING OF ABANDONMENT

This is a decision, *sua sponte*, withdrawing the holding of abandonment of the above-identified application.

A review of the subject application reveals that non-final Office action was mailed on February 11, 2004, setting forth a rejection of the claims, but also objecting to claim 2, that if re-written to overcome a 35 U.S.C. 112 2nd paragraph rejection and to include all of the limitations of the base claim and any intervening claim, the claim would be allowable. Applicants filed a response on May 11, 2004, amending claim 2, but also adding claims 7 through 12. On June 3, 2004, the examiner correctly prepared and mailed a communication indicating that applicants' May 11, 2004 communication was not fully responsive in accordance with 37 C.F.R. § 1.111, due to a lack of statements regarding novelty with respect to the new claims 7 through 12.

> 37 C.F.R. § 1.111 Reply by applicant or patent owner to a non-final Office action, states in part:...
>
> (c) In amending in reply to a rejection of claims in an application or patent under reexamination, the applicant or patent owner must clearly point out the patentable novelty which he or she thinks the claims present in view of the state of the art disclosed by the references cited or the objections made. The applicant or patent owner must also show how the amendments avoid such references or objections.

The non-responsive communication set a one month or thirty day time period for supplying the omission or correction, with extensions of time being permitted, in accordance with 37 C.F.R. §1.135.

> § 1.135 Abandonment for failure to reply within time period, states in part:...
>
> (c) When reply by the applicant is a bona fide attempt to advance the application to final action, and is substantially a complete reply to the non-final Office action, but consideration of some matter or compliance with some requirement has been inadvertently omitted,

> applicant may be given a new time period for reply under § 1.134 to supply the omission.

On September 3, 2004, applicants filed a supplemental response with a petition for two month extension of time. Applicants' response included the cancellation of claims 7-12 and a clean copy of all the previously presented and pending claims. On December 14, 2004, the examiner mailed a communication which indicated that the original amendment filed May 11, 2004, was not entered into the record and thus the amendment filed September 3, 2004 was improper since it did not include underlines and deletion lines. It then appears as though the December 14, 2004 communication issues a new non-responsive notice, setting a new one month or thirty day response period to file the omission or correction to the May 11, 2004 amendment, but then in the same communication, indicates that applicants' substitute amendment could not be entered given that the time period for filing a response had expired. On December 30, 2004, applicants paid the balance of a five month extension of time request. On August 17, 2005, applicants sent in a status inquiry and on September 20, 2005, a Notice of Abandonment for failure to respond to the December 14, 2004 communication was mailed.

Given the record above, it is clear that applicant timely filed a response with a two month extension of time on September 3, 2004. It is also evident that applicants' September 3, 2004 submission complied with 37 C.F.R. § 1.121 'Manner of making amendments in applications', which states in part:...

> (c) Claims . Amendments to a claim must be made by rewriting the entire claim with all changes (e.g., additions and deletions) as indicated in this subsection, except when the claim is being canceled. <u>Each amendment document that includes a change to an existing claim, cancellation of an existing claim or addition of a new claim, must include a complete listing of all claims ever presented, including the text of all pending and withdrawn claims, in the application</u>. The claim listing, including the text of the claims, in the amendment document will serve to replace all prior versions of the claims, in the application. In the claim listing, the status of every claim must be indicated after its claim number by using one of the following identifiers in a parenthetical expression: (Original), (Currently amended), (Canceled), (Withdrawn), (Previously presented), (New), and (Not entered). [emphasis added]

Applicants are required under 37 C.F.R. § 1.121, to include a complete listing of all claims ever presented, including the pending claims when submitting an amendment, inclusive of when the amendment is merely the cancellation of claims. Applicants' September 3, 2004 amendment complied with the requirement of 37 C.F.R. §1.121, specifically, applicants cancelled claims 7 through 12 and provided a complete listing of all the claims. Moreover, the cancellation of claims 7-12 in the September 3, 2004 amendment, resolved the original omission of a statement regarding novelty, i.e., the cancellation of claims 7-12 removed the requirement for a statement of novelty regarding those claims. Therefore, the September 3, 2004 submission should have been entered as being fully responsive to the outstanding non-responsive communication of June 3, 2004.

Although no petition or request to withdraw the holding of abandonment in this application has been filed, the Notice of Abandonment is hereby vacated and the holding of abandonment is withdrawn. Any inconvenience caused petitioner is regretted.

The application file will be forwarded to the Technology Center's technical support staff for entry of both the May 11, 2004 and Sept 3, 2004 amendments. From there, the application file will be forwarded to the examiner for action in appropriate turn.

Dwayne Bost
Special Program Examiner
Technology Center 2600
Communications

UNITED STATES PATENT AND TRADEMARK OFFICE

Commissioner for Patents
United States Patent and Trademark Office
P.O. Box 1450
Alexandria, VA 22313-1450
www.uspto.gov

OYEN, WIGGS, GREEN & MUTALA, LLP
480 The Station
601 West Cordova Street
Vancouver BC V6B 1G1 Canada

MAIL

APR 2 8 2005

DIRECTOR OFFICE
TECHNOLOGY CENTER 2100

In re Application of:
Christopher PICHE, et al.
Application No. 09/978,082
Filed: October 17, 2001
For: METHOD AND APPARATUS FOR IMPROVING REAL TIME AND/OR INTERACTIVE ANIMATION OVER A COMPUTER NETWORK

DECISION ON REQUEST TO WITHDRAW AS ATTORNEY OR AGENT

This is a decision on the Request to Withdraw from Representation filed February 8, 2005.

A grantable request to withdraw as attorney of record should indicate thereon the present mailing addresses of the attorney(s) who is/are withdrawing from the record and of the applicant. The request for withdrawal must be signed by every attorney seeking to withdraw or contain a clear indication that one attorney is signing on behalf of another/others. A request to withdraw will not be approved unless at least 30 (thirty) days would remain between the date of approval and the later of the expiration date of a time to file a response or the expiration date of the maximum time period which can be extended under 37 C.F.R. § 1.136(a). The effective date of withdrawal being the date of decision and not the date of request. See M.P.E.P. § 402.06. 37 C.F.R. § 1.36 **further requires that the applicant or patent owner be notified of the withdrawal of the attorney or agent.**

There is no indication that Applicant has been notified of the request for withdrawal. Accordingly, the request is **DENIED.**

All future communications from the Office will continue to be directed to the above-listed address until otherwise notified by applicant. This correspondence address is provided by the withdrawn attorney(s). Applicant is reminded of the obligation to promptly notify the Patent and Trademark Office (Office) of any change in correspondence address to ensure receipt of all communications from the Office.

For

Vincent N. Trans
Special Program Examiner
Technology Center 2100
Computer Architecture, Software, and
Information Security
571-272-3613

UNITED STATES PATENT AND TRADEMARK OFFICE

JUL 31

FEB 26 2003

COMMISSIONER FOR PATENT
UNITED STATES PATENT AND TRADEMARK OFFIC
WASHINGTON, D.C. 20231
www.uspto.go

~~JUL 30 2002~~

RECEIVED: 8-5-02

OBLON, SPIVAK, McCLELLAND
MAIER & NEUSTADT, P.C.
DOCKETING DEPT.
Initials/Date Docketed: 11-8-02
Type of Resp(s):
Due Date(s):

OBLON SPIVAK MCCLELLAND MAIER & NEUSTADT PC
FOURTH FLOOR
1755 JEFFERSON DAVIS HIGHWAY
ARLINGTON VA 22202

In re Application of
Vierira, et al.
Application No. 09/908,888
Filed: July 20, 2001
For: Fabrication Of A Wavelength Locker Within A Semiconductor Structure
Attorney Docket No. 211692US99

: RESPONSE TO PETITION
: UNDER 37 CFR 1.182
: SEEKING SPECIAL
: TREATMENT OF DISCLOSURE
: STATEMENTS, AND
: DECISION ON PETITION
: UNDER 37 CFR 1.183
: SEEKING WAIVER OF
: REQUIREMENTS UNDER
: 37 CFR 1.98

This is a response to a petition under 37 CFR 1.182 filed on April 12, 2002 and supplements filed on July 1, 2002 and on July 12, 2002. The § 1.182 petition requests special treatment of disclosure statements filed pursuant to 37 CFR 1.98. Additionally, the petition requests waiver of the rules which waiver is treated as a request under 37 CFR 1.183, for relief from the current requirements for Information Disclosure Statements under 37 CFR 1.98. The request for special treatment and waiver are made in view of the need to file multiple applications relating to different aspects of a particular invention. The § 1.182 petition also contains a request seeking permission to submit prior art submissions on compact disc and the establishment and searching of an Official classification(s) based on the prior art submission. The petition under 37 CFR 1.183, is requesting relief from the § 1.98 provision which requires filing paper copies of references in each of many related applications where the references are being cited by Petitioner.

The petition under 37 CFR 1.182 requesting special treatment of disclosure statements, and the petition under 37 CFR 1.183 regarding the submission of a reduced number of paper copies of IDS references is **GRANTED IN PART** to the extent set forth below.

The Decision is set forth in five parts:

- Part I. Background
- Part II. Petition Under 37 CFR 1.182 - Special Treatment
- Part III. Petition Under 37 CFR 1.183 - Paper Copies
- Part IV. Summary
- Part V. Further Correspondence

Part I. Background

The instant application filed under 35 U.S.C. 111 is one of about 330 U.S. applications (either filed or to be filed) relating to

different aspects of an invention listed in the July 1, 2002 supplement to the petition. An appendix prepared by Technology Center 2800 indicates approximately 300 of the applications have been classified for examination in Technology Center 2800. The balance of about 30 applications are in five other Technology Centers. The July 12, 2002 supplement to the petition indicates that an Information Disclosure Citation List has in excess of 400 reference citations.

Petitioner's submission of an Information Disclosure Statement is taken as an attempt to comply with 37 CFR 1.56(b)(1) that requires disclosure to the Office of information that "establishes, by itself or in combination with other information, a prima facie case of unpatentability of a claim...." Such disclosure can be made by an Information Disclosure Statement (IDS) in the manner prescribed by 37 CFR 1.97 and 1.98.

Part II. Petition Under 37 CFR 1.182 - Special Treatment

The petition requests the establishment of an Official search classification containing all of the references cited in the IDS and that the examiners be required to search that classification.

As is the case with all search Digests, their creation and usefulness is continually evaluated. The Office will create and place appropriate references in Digests as they are discovered. The Office will not commit to placement of each IDS citation, made in all of the bulk filing applications, in any Digest(s) as the particular relevancy of the citations at this time is uncertain because petitioner has supplied no explanation of any of the citations. The Office will not require that any digest(s) created be searched for each of the bulk filing applications as the appropriate search for any particular application is within the determination and discretion of individual examiner based on the claim(s) of that application.

The petition also mentions the submission of additional copies of the references on compact disc for the examiner's convenience which appear to be courtesy copies. Courtesy copies will not be made part of the Official record of any application and cannot be relied upon for meeting any requirement for the submission of an information disclosure statement. There is insufficient information in the petition concerning the data formats and software requirements to accord the compact discs any other status. Further, as discussed below, the Office has a procedure for electronically submitting citations without paper copies for an Information Disclosure Statement. Hence it is not clear why relief is required under § 1.182. In view of the relief granted below, and that no specific action is requested concerning the compact disc submission, no further discussion of the compact discs is required in this decision.

Petition under § 1.182 is Dismissed.

Part III. Petition Under 37 CFR 1.183 - Paper Copies

37 CFR 1.98 requires that any information disclosure statement provide a copy of all patents, publications or other information submitted under 37 CFR 1.97 for consideration by the Office. 37 CFR 1.97 notes that information disclosure statements are considered in regard to the application in which they are filed. See also MPEP 609, pages 600-118 and 600-119.

Paper copies: Petitioner notes that the instant application is one of about 330 bulk filing applications that will be or have been filed in regard to a particular technology. Accordingly, Petitioner requests that individual paper copies of each citation brought to the attention of the Office in regard to the instant individual application, the "holding" application, not be required to be submitted in each related "bulk filing" application. Rather, it is requested that three complete sets of paper copies be permitted to be filed as a substitute for filing in each application.

Rather than be required to submit, via a paper copy, 400 reference in each of 330 applications, Petitioner seeks to have:

(1) Three complete sets of paper copies of each IDS citation submitted;

(2) One application (the instant application) identified as a "holding" application which would contain one complete set of paper copies of references; the paper copies of U.S. patents to be submitted in only the "holding" application;

(3) The other related pending U.S. applications, hereafter referred to as the "bulk filing" applications, be exempt from containing a paper set of the references; the bulk filing applications will contain other information, e.g., a copy of the decision on petition permitting such procedure, a copy of the Form 1449 (or equivalent). The petition does not indicate whether the paper references that are to be submitted as a numbered compendium, which numbering will correspond to the numbering in a PTO-1449 form.

(4) The information supplied via the bulk filing IDS will be updated approximately monthly.

Once past the initial IDS submission, the petition proposes the waiver to apply to updates.

Suspension of action: In view of the use of the instant application as a holding application (to contain a complete set of paper copies of reference citations, which can be consulted by the examiner when examining any of the other bulk filing applications that have a Form 1449 but not the paper copies of the references), the petition does not address how upon allowance the instant holding application will be treated. Whether the application can remain as the holding application without a suspension of action is not addressed. An alternative not discussed in the petition is that an alternate application may be designated as the holding application.

Termination: Petitioner does not seek a specific right of termination. Termination by the Office is to be by written notice to the attorney giving a 2 month period. Termination by Petitioner is to be by returning to compliance with 37 CFR § 1.98. The Office will accept and specifically reserve the right to terminate the waiver grant in regard to § 1.98(a)(2) without provision of reasons. Should a termination of the waiver be desired by the Office, the Office will provide written notice to the correspondence address of record. In such event, a two month period will be given where paper copies would have to be supplied in all applications where new citations are made. Termination by Applicant may be by returning to compliance with § 1.98(a)(2) without formal notice thereof and no transition/continuing period after termination is required.

Different Technology Centers: It appears from the petition that Petitioner intends to cite every reference cited in any of the 330 applications in every other application. No references will be omitted because they are less relevant or cumulative of those already of record in a particular application. At least 30 of the applications are of such divergent technologies that they are in 5 technology centers outside Technology Center 2800. The applications outside Technology Center 2800 will be examined in areas without convenient access to the paper copies in Technology Center 2800. The 5 other technology centers have requested more access to the paper copies than the relief granting this petition for all 330 applications will afford. It is not clear from the petition why citing every reference in every application when they are in such diverse technologies is necessary or required by § 1.56. Relieving petitioner of the burden of filing paper copies in applications outside Technology Center 2800 will create an additional burden on the examiners of those applications. It is also possible for applicant to comply with 37 CFR 1.98 for U.S. Patents and Patent application publications by submitting references via "e-IDS.[1]" Hence it appears that petitioner has not demonstrated why a waiver for those applications filed outside Technology Center 2800 is necessary.

Decision: 37 CFR 1.183 provides relief for extraordinary situations, when justice requires suspension of any requirement of the regulations which is not a requirement of the statutes. The instant petition urges that not only would applicant be spared the necessity of submitting duplicative paper copies of U.S. patents in over 300 applications, but also the Office would benefit from not having to handle and store the duplicative sets of copies. While there may be some negative effects from the Office's point of view in terms of making the copies available to different examiners handling the various applications, on balance, there is seen to be sufficient benefit to justify waiver in this instance for the applications filed in Technology Center 2800. With respect to those applications being examined outside

---

[1]The instructions for submitting an e-IDS can be downloaded at: http://www.uspto.gov/ebc/efs/downloads/documents/EFSePAVE_April23.pdf.

Technology Center 2800, on balance, the burden on petitioner is substantially less to provide an additional paper copy for each application with significantly less benefit to the Office waiving the requirement. Further with respect to other 30 applications the need to submit these references has not been established nor has petitioner addressed alternative methods of compliance.

Accordingly, the petition under 37 CFR 1.183 is granted to the extent indicated and under the terms and conditions as are set forth below.

The § 1.98(a)(2) requirement for (the submission of) a copy of each IDS citation in a bulk filing application will be waived in the bulk filing applications examined in Technology Center 2800 provided that the following 9 conditions are complied with:

1) Three paper copies of each IDS citation are or have been submitted to the Office;

2) Each (bulk filing) application for which waiver of § 1.98(a)(2) is desired refers to the instant holding application, such as by a claim of priority under 35 U.S.C. 120, or as containing related technology;

3) The information is or has also been cited in the holding application;

Note: Applicant is not required to cite in each bulk filing application every item of information that is cited in the instant holding application. Items should be cited in each bulk filing application on the basis of relevancy and materiality to the particular claims in the bulk filing application and what each piece of information teaches.

A waiver is not granted (for the requirement to supply a paper copy of an IDS citation in another bulk filing application) where the citation is not, or has not been, made in the instant holding application.

4) A copy of this Decision is filed in each bulk filing application for which waiver is requested;

5) Explanatory information related to a particular citation, such as the concise explanation of a foreign language reference under § 1.98(a)(2), once submitted in the holding application must be supplied in each bulk filing application where the citation is made.

6) The Office accepts and specifically reserves the right to terminate the waiver grant in regard to § 1.98(a)(2) without provision of reasons. In such event, a two month period will be given where paper copies would have to be supplied in all applications where new citations are made. Should a termination of the waiver be desired by the Office, the Office will provide written notice to the correspondence address of record. Termination by applicant may be by returning to compliance with § 1.98(a)(2) without formal notice thereof and no transition/continuing period after termination is required.

7) The grant of the § 1.183 petition re § 1.98(a)(2) does

not indicate that the Office would favorably treat a petition to suspend action under § 1.103(a) should the instant holding application be allowed. Issuance of the instant application as a patent is not seen to terminate its usefulness either: (1) as a holding application for references by examiners working on other related applications, or (2) as a vehicle for the storage of references to be cited even after the patent issues (35 U.S.C. 301, 37 CFR 1.501, and MPEP 2202). Should the instant application become abandoned, the issue of continued introduction of paper copies of new citations could be taken up at that time. The Office, however, may consider suspending or taking other appropriate action in the instant holding application in the event the holding application is allowed, if it is in the best interest of the Office to do so.

8) There will be no waiver of any aspects of 37 CFR 1.98 in any application after allowance or final rejection of that application.

9) The copies will be submitted as a compendium with the reference numbering in the Form 1449 corresponding to the presentation of the references in the compendium.

Part IV. Summary

The petition under 37 CFR 1.182 requesting special treatment by creation of special digests and accepting compact disc submissions is dismissed because there is no showing that the relief granted below under 37 CFR 1.183 is not sufficient for compliance with 37 CFR 1.56.

The petition under 37 CFR 1.183 agreeing to supply three copies of each IDS citation in a holding application and requesting waiver of the paper copy requirement for submission in every related application under § 1.98(a)(2) is granted for those applications examined in Technology Center 2800, however, the following is not agreed to:

- the waiver of supplying a paper copy of each reference in applications examined outside Technology Center 2800.
- the creation of Official search classifications and the mandatory search thereof.
- The establishment of an Official search classification containing all of the references cited in the IDS and that the examiners be required to search that classification.

Part V. Further Correspondence

Any correspondence with respect to this matter should be addressed as follows:

By mail: Assistant Commissioner for Patents
Box DAC
Washington, D.C. 20231

TC Assignment Appendix
Bulk Filing List With TC Assignment

Docket Number	Application #	Art Unit
	10125540	1631
	9984471	1641
	9624877	1725
	9911539	1725
	9911493	1743
	9832354	1753
	9842735	1765
	9884981	1765
	9911702	1765
	9921910	1765
	9975930	1765
	10124460	1765
	09273929	1765
	09662390	1765
	9905110	1772
	9621771	1775
	9870830	1775
	9871958	1775
	9901109	1775
	9960402	1775
	09274268	1775
	09465623	1775
	09813779	1775
	9865446	2631
	9930171	2633
	09617640	2633
	9910032	2663
	10152783	2673
	09607239	2681
	09607420	2682
	9900885	2811
	10125486	2811
	10128262	2811
	10141876	2811
	10145734	2811
	10150065	2811
	09607386	2811
205954US-8737-8737-99	09607434	2811
20568ous-8737-8737-99	09712425	2811
205890US-8737-8737-99	09721566	2811
2061 ssus-8737-s737-ss	09766046	2811
208836US-8737-8737-99	09861636	2811
210044US-8737-8737 99	09884150	2811
210790US.-8737-8737-99	09897965	2811
210260US-8737-8737-99	09900887	2811
211327US-8737-8737-99	09905869	2811
211318US-8737-8737-99	09905935	2811
211467U5-8737-8737-99	09907705	2811
211685US-87378737-99	09908695	2811
211535US-8737-8737-99	09908860	2811
211689US-8737-8737-99	09908886	2811
21158!5US-8737-8737-99	09909936	2811
211891 US-8737-8737-99	09911455	2811
211804US-8737-8737-99	09911456	2811
211642US-8737-8737-99	09911465	2811
211805US-8737-8737-99	09911475	2811
213020US-8737-8737-99	09930247	2811

Docket Number	Application #	Art Unit
214975US-8737-8737-99	09978096	2811
216416 US-8737-8737-99	09994066	2811
217300US-8737-8737-99	10017596	2811
217730US,8737-8737-99	10026446	2811
219105US-8737-8737-99	10062429	2811
220526 US-8737-236694-99	10091452	2811
	10137383	2812
	10150066	2812
205958US-8737-8737-99	09678372	2812
	09801881	2812
209888 US-8737-8737-99	09884082	2812
210236US-8737-8737-99	09900921	2812
210800US,8737-8737-99	09903741	2812
211147US-8737-8737-99	09903784	2812
211214US-8737-8737-99	09904892	2812
211398US-8737 8737-99	09905981	2812
211691 US-8737-8737-99	09908902	2812
211699US-8737-8737-99	09909941	2812
211574US-8737-8737-99	09910022	2812
211644US-8737-8737.99	09910754	2812
21217005-8737-8737-99	09921901	2812
21288605-8737-8737-99	09929021	2812
216420US-8737-8737-99	09993523	2812
218840US-8737-8737-99	10059411	2812
	10134506	2813
205962US-8737-8737-99	09624526	2813
205881 US-8737-8737-99-CIP	09780119	2813
291419US-8737-8737-99	09906783	2813
21189705.8737-8737-99	09911496	2813
211806US-8737-8737-99	09911496	2813
29 2171 US-8737-8737-99	09921905	2813
215930US-8737-8737-99	09986899	2813
	9930275	2814
	10137369	2814
	10140939	2814
205949US-8737-8737-99	09607408	2814
205924US-8737-8737-99	09621779	2814
205925US-8737 8737-99	09624699	2814
205917US-8737-8737-99	09642558	2814
205906US-8737-8737-99-CIP	09740219	2814
208835US-8737-8757-99	09861638	2814
208833US-8737-8737-99	09861639	2814
209079US-8737-8737-99	09865428	2814
209117US-8737-8737-99	09865429	2814
209080US-8737-8737-99	09865448	2814
208889US-8737-8737-99	09865449	2814
209995US-8797-8737-99	09882063	2814
210295US-8737-8737-99	09897059	2814
210789US-8737-8737-99	09897968	2814
211334US-8737-8737-99	09905980	2814
211323US-8737-8737-99	09906138	2814
211662US-8737-8737-99	09908888	2814
210139US-8737-8737-99	09909939	2814
211580US-8737-8737-99	09910019	2814
211719US-8737-8737-99	09911458	2814
211920US-x737-8737-99	09911459	2814
211720US-8737-8737-99	09911478	2814
21195505-8737-8737-99	09911488	2814

Docket Number	Application #	Art Unit
21202205-8737-8737-99	09911518	2814
21241905-8737$737-99	09921898	2814
21287705-8737-8737-99	09929018	2814
21294505-8737-8737-99	09929748	2814
212949US-8737-8737-99	09930188	2814
212960US-8737-8737-99	09930259	2814
212958US-8737-8737-99	09930278	2814
215560US-8737-8737-99	09983859	2814
21 B359US 8737-8737-99	10053588	2814
205920US-8737-8737-99-C1P	09607207	2815
20591 OUS-8737-8737-99	09621130	2815
205927US-8737-8737-99	09624691	2815
205918US-8737-8737-99	09629283	2815
205877US-8737-8737-99	09692568	2815
205887US-8737-8737-99	09733181	2815
205922US-8737-8737-99-C1P	09755340	2815
205961 US-8737-8737.99	09755341	2815
205960uS-8737-8737-99	09755691	2815
205966us-8737-8737-99-cIP	09824376	2815
205967US-8737-8737-99-CIP	09824615	2815
209279US-8737-8737-99	09849172	2815
209340US-8737'8737.99	09870592	2815
' 209997US-8737-8737-99	09882062	2815
210140US-8737-8737-99	09884982	2815
210243US-8737-8737-99	09900882	2815
210798US-8737-8737-99	09901601	2815
210827US-8737-8737-99	09903742	2815
211400US-8737-8737-99	09904841	2815
210828US~8737-8737-99	09905932	2815
211677US-8737.-8737-99	09908892	2815
211675US-8737-8737-99	09910021	2815
211645US 8737-8737-99	09911412	2815
211894US-8737-8737-99	09911490	2815
212423US-8737-8737-99	09911491	2815
211896US-8737-8737-99	09911542	2815
2114.71 US-8737-8737-99	09911691	2815
21202405-8737-8737-99	09918801	2815
212543US-8737-8737-99	09924481	2815
21266905-8737-8737-99	09927396	2815
212761 US-8737-8737-99	09928356	2815
212954US-8737-8737-99	09929020	2815
29 287805-8737-8737-99	09929022	2815
212947US-8737-8737-99	09929261	2815
212944 US-8737-8737-99	09930145	2815
29290605-8737-8737-99	09930175	2815
212948US-8737-8737-99	09930176	2815
213012US-8737-8737-99	09930260	2815
212953US-8737-873799	09930261	2815
212959 US-8737-8737-99	09930276	2815
213130US-8737-8737-99	09934836	2815
215512US•8737-8737-99-CIP	09983854	2815
215878US-8737-.8737-99-DIV	09986034	2815
219625US-8737-8737-99-DIV	10076450	2815
211573US-8737-8737-99	09909938	2816
211637US-87378737-99	09910799	2817
	10161743	2818
205955US-8737-8737-99	09609071	2818
205913U8~8737-8737•99	09656337	2818
205957US-8737-8737-99	09712875	2818

Docket Number	Application #	Art Unit
205908US$737-8737-99	09740268	2818
206160US-8737-8737-99	09753808	2818
205909US-.8737-8737-99	09822499	2818
205969US,8737-8737-99	09822499	2818
205971 US-8737-8737-99	09824259	2818
205970US-8737-8737-99	09824388	2818
209278US-8737-8737-99	09849159	2818
209280US-8737-8737-99-CIP	09859700	2818
209341 US-8737-8737-99	09870589	2818
209164US-8737-8737-99	09870828	2818
209166US-8737-8737-99	09870829	2818
210132US-8737-8737-99	09884149	2818
210148US-8737-8737-99	09885409	2818
211314US-8737-8737-99	09905868	2818
211422US-8737-8737-99	09906769	2818
211472US-8737-8737-99	09908898	2818
211670U&8737-8737-99	09910018	2818
211686US-8737-8737-99	09910020	2818
211640US-8737-8737-99	09910798	2818
21195805-8737-8737-99	09911429	2818
211584US-8737-8737-99	09911448	2818
211578US-8737-8737-.99	09911628	2818
211425US-8737-873799	09911629	2818
215562 US-8737-8737-99	09983869	2818
217459US-8737-8737-99	10020900	2818
218843US 8737-8737-99	10059409	2818
215820US 8737-8737-99	09986534	2821
208826US-8737-8737-99	09861637	2822
209078US-8737-8737-99	09865447	2822
209077US-8737-8737-99	09866637	2822
210792US-8737-8737-99	09899997	2822
211469 US-8737-8737-99	09907707	2822
211534US-8737-8737-99	09908707	2822
211684US-8737-8737-99	09908887	2822
211673US-8737-8737-99	09908897	2822
211674US-8737-8737-99	09909937	2822
211956 US-8737-8737-99	09911447	2822
211850US.8737-8737-99	09911507	2822
212021 US-8737-873798	09911517	2822
21202505-87378737-99	09911627	2822
212131 US-8737-8787-99	09919967	2822
21290705-8737-8737-99	09930170	2822
	10136324	2823
205959US-87378737•99	09689583	2823
210150US-8737-8737-99	09884983	2823
210244US-8737-8737-99	09900883	2823
210216US-8737-8737-99	09903743	2823
211413US-8737-8737-99	09905863	2823
211315US-8737-8737-99	09905933	2823
211474US-8737-8737-99	09907703	2823
211555US-8737-8737-99	09908883	2823
211671 US-8737-8737-99	09910023	2823
211676US-8737-8737-99	09910034	2823
211618US-8737-8737-99	09910753	2823
29 2955US-8737-8737-99	09930444	2823
215873US-8737-8737-99-D IV	09986024	2823
216598US-8737-8737-99-DN	09993514	2823
205889US-8737737-99	09733688	2824
205914US-8737-8737-99	09795784	2824

Docket Number	Application #	Art Unit
210259US-8737-873799	09897128	2824
210784US-8737-8737-99	09905098	2824
211577US-8737-9737-99	09909905	2824
21301 OUS-8737-8737-99	09930308	2824
	10125410	2825
205912US-8737$737 99	09624690	2825
205893US-8737-873799	09625100	2825
210788US-8737-8737-99	09901110	2825
211317US-8737-8737-99	09906730	2825
211688US-8737-8737-99	09908891	2825
211579US-8737-8737-99	09909940	2825
211917US-8737-8737-99	09911460	2825
205973US-8737-8737-99	09584601	2826
205938US-8737-8737-99	09624296	2826
205934US-8737-8737.89	09624754	2826
205884US-8737-8737-99-CIP	09758723	2826
205968US-8737-8737-99	09824273	2826
206669US-8737-873799	09838273	2826
209491 US-8737-8737-99-CIP	09840213	2826
209284U S,B737-8737-99	09842734	2826
209281 US-8737-8737-99	09853744	2826
209336US-8737-8737-99	09870834	2826
209505US-8737-8737-99	09874984	2826
210826US-8737-873799	09904894	2826
210786US-8737-87379	09905902	2826
211326US-8737-8737-99	09905903	2826
211328US-8737-8737-99	09905930	2826
211325US-8737-8737-99	09905934	2826
211431 US-8737-8737-99	09906784	2826
211468US-8737-8737-99	09907704	2826
211672 US-8737-8737-99	09910024	2826
211582US-8737-8737-99	09910044	2826
21202005-8737-8737-99	09911444	2826
211724us-6737-8737-99	09911464	2826
211803US-8737-8737-99	09911473	2826
211690US-8737-8737-99	09911484	2826
211890US-8737-8737-99	09911494	2826
211722US-8737-8737-99	09911543	2826
212421 U&8737-8737-99	09921894	2826
292946US-8737-8737-99	09929024	2826
213009US-8737-8737-99	09930254	2826
21290905-8737-8737-99	09930270	2826
	9985757	2828
209282U5-8737•873799	09852109	2828
210787US-8737-8737-99	09901905	2828
210785US-8737-8737-99	09903740	2828
210257US-8737-8737-99	09910035	2828
21217305-8737-8737-99	09921900	2828
213011 US-8737-8737-99	09930243	2828
	10166196	2829
206166US-8737-8737-99	09425945	2829
209696US-8737-8737-99	09882064	2829
211324US-8737-8737-99	09904895	2829
211332 US-87378737-99	09905116	2829
211893US-8737-8737-99	09911445	2829
211723US~8737-8737-99	09911446	2829
21181 OUS-8737-8737-99	09911495	2829
215295US-8737-8737-99	09983326	2829

Docket Number	Application #	Art Unit
205915US-8737-9737-99	09624803	2834
211916US-8737-8737-99	09911487	2839
217731 US-8737-8737-99	10026812	2841
	10151950	2851
217354US-8737-8737-99	10020898	2861
205972US-8737-873799	09624698	2872
205939US-8737 837-99	09669602	2873
205950U"737-8737-99	09607236	2874
205951 US-8737-8737-99	09607744	2874
205947US-8737-8737-99	09608807	2874
209409U$-8737-8737-99	09870836	2874
209162US-8737r8737-99	09870837	2874
217678US-8737-8737-99	09908885	2874
210824US-8737-8737-99	09909906	2874
211854US-8737-8737-99 -	09911457	2874
211808US-8737-8737-99	09911466	2874
211807US-8737-8737-89	09911469	2874
211911 US-8737-8737-99	09911472	2874
21195705-8737-8737-99	09911492	2874
21209905-8737-8737-99	09918802	2874
21209805-8737-8737-99	09919927	2874
212950US-8737-8737-99	09929019	2874
215539US-8737-8737-99-CONT	09983866	2874
205949 US-8737-8737-99	09607237	2876
205944US-8737-8737 99	09609262	2877
209403US-8737-8737-99	09870831	2877
209338US-8737-8737-99	09870832	2877
209695US-8737-8737-99	09882067	2878
209402US'.8737-8737-99	09870835	2881
210794US-8737-8737-99	09899996	2881
211427US-8737-8737-99	09906782	2881
21242505-8737-8737-99	09921895	2881
212426US-8737.-8737-99	09921896	2881
212590US-8737-8737-99	09927393	2881
209342US-87378737-99	09870833	2882
	9905115	3662
	9911420	3663
	09607722	3736

By FAX: (703) 872-9005

By hand: Crystal Plaza Four, Suite 3C23
2201 South Clark Place
Arlington, VA 22202

Telephone inquiries should be directed to Michael L. Lewis at (703)306-5585.

Robert J. Spar
Director
Office of Patent Legal Administration
Office of the Deputy Commissioner
for Patent Examination Policy

Attachment: TC Assignment Appendix

UNITED STATES PATENT AND TRADEMARK OFFICE

JUL 31 2002

COMMISSIONER FOR PATENT
UNITED STATES PATENT AND TRADEMARK OFFIC
WASHINGTON, D.C. 20231
www.uspto.go

~~JUL 30 2002~~

RECEIVED: 8-5-02
OBLON, SPIVAK, McCLELLAND
MAIER & NEUSTADT, P.C.
DOCKETING DEPT.
Initials/Date Docketed: 8-5-02
Type of Resp(s):
Due Date(s):

OBLON SPIVAK MCCLELLAND MAIER & NEUSTADT PC
FOURTH FLOOR
1755 JEFFERSON DAVIS HIGHWAY
ARLINGTON VA 22202

In re Application of
Vierira, et al.
Application No. 09/908,888
Filed: July 20, 2001
For: Fabrication Of A Wavelength Locker Within A Semiconductor Structure
Attorney Docket No. 211692US99

: RESPONSE TO PETITION
: UNDER 37 CFR 1.182
: SEEKING SPECIAL
: TREATMENT OF DISCLOSURE
: STATEMENTS, AND
: DECISION ON PETITION
: UNDER 37 CFR 1.183
: SEEKING WAIVER OF
: REQUIREMENTS UNDER
: 37 CFR 1.98

This is a response to a petition under 37 CFR 1.182 filed on April 12, 2002 and supplements filed on July 1, 2002 and on July 12, 2002. The § 1.182 petition requests special treatment of disclosure statements filed pursuant to 37 CFR 1.98. Additionally, the petition requests waiver of the rules which waiver is treated as a request under 37 CFR 1.183, for relief from the current requirements for Information Disclosure Statements under 37 CFR 1.98. The request for special treatment and waiver are made in view of the need to file multiple applications relating to different aspects of a particular invention. The § 1.182 petition also contains a request seeking permission to submit prior art submissions on compact disc and the establishment and searching of an Official classification(s) based on the prior art submission. The petition under 37 CFR 1.183, is requesting relief from the § 1.98 provision which requires filing paper copies of references in each of many related applications where the references are being cited by Petitioner.

The petition under 37 CFR 1.182 requesting special treatment of disclosure statements, and the petition under 37 CFR 1.183 regarding the submission of a reduced number of paper copies of IDS references is **GRANTED IN PART** to the extent set forth below.

The Decision is set forth in five parts:

- Part I. Background
- Part II. Petition Under 37 CFR 1.182 - Special Treatment
- Part III. Petition Under 37 CFR 1.183 - Paper Copies
- Part IV. Summary
- Part V. Further Correspondence

Part I. Background

The instant application filed under 35 U.S.C. 111 is one of about 330 U.S. applications (either filed or to be filed) relating to

different aspects of an invention listed in the July 1, 2002 supplement to the petition. An appendix prepared by Technology Center 2800 indicates approximately 300 of the applications have been classified for examination in Technology Center 2800. The balance of about 30 applications are in five other Technology Centers. The July 12, 2002 supplement to the petition indicates that an Information Disclosure Citation List has in excess of 400 reference citations.

Petitioner's submission of an Information Disclosure Statement is taken as an attempt to comply with 37 CFR 1.56(b)(1) that requires disclosure to the Office of information that "establishes, by itself or in combination with other information, a prima facie case of unpatentability of a claim...." Such disclosure can be made by an Information Disclosure Statement (IDS) in the manner prescribed by 37 CFR 1.97 and 1.98.

Part II. Petition Under 37 CFR 1.182 - Special Treatment

The petition requests the establishment of an Official search classification containing all of the references cited in the IDS and that the examiners be required to search that classification.

As is the case with all search Digests, their creation and usefulness is continually evaluated. The Office will create and place appropriate references in Digests as they are discovered. The Office will not commit to placement of each IDS citation, made in all of the bulk filing applications, in any Digest(s) as the particular relevancy of the citations at this time is uncertain because petitioner has supplied no explanation of any of the citations. The Office will not require that any digest(s) created be searched for each of the bulk filing applications as the appropriate search for any particular application is within the determination and discretion of individual examiner based on the claim(s) of that application.

The petition also mentions the submission of additional copies of the references on compact disc for the examiner's convenience which appear to be courtesy copies. Courtesy copies will not be made part of the Official record of any application and cannot be relied upon for meeting any requirement for the submission of an information disclosure statement. There is insufficient information in the petition concerning the data formats and software requirements to accord the compact discs any other status. Further, as discussed below, the Office has a procedure for electronically submitting citations without paper copies for an Information Disclosure Statement. Hence it is not clear why relief is required under § 1.182. In view of the relief granted below, and that no specific action is requested concerning the compact disc submission, no further discussion of the compact discs is required in this decision.

Petition under § 1.182 is Dismissed.

Part III. Petition Under 37 CFR 1.183 - Paper Copies

37 CFR 1.98 requires that any information disclosure statement provide a copy of all patents, publications or other information submitted under 37 CFR 1.97 for consideration by the Office. 37 CFR 1.97 notes that information disclosure statements are considered in regard to the application in which they are filed. See also MPEP 609, pages 600-118 and 600-119.

Paper copies: Petitioner notes that the instant application is one of about 330 bulk filing applications that will be or have been filed in regard to a particular technology. Accordingly, Petitioner requests that individual paper copies of each citation brought to the attention of the Office in regard to the instant individual application, the "holding" application, not be required to be submitted in each related "bulk filing" application. Rather, it is requested that three complete sets of paper copies be permitted to be filed as a substitute for filing in each application.

Rather than be required to submit, via a paper copy, 400 reference in each of 330 applications, Petitioner seeks to have:

(1) Three complete sets of paper copies of each IDS citation submitted;

(2) One application (the instant application) identified as a "holding" application which would contain one complete set of paper copies of references; the paper copies of U.S. patents to be submitted in only the "holding" application;

(3) The other related pending U.S. applications, hereafter referred to as the "bulk filing" applications, be exempt from containing a paper set of the references; the bulk filing applications will contain other information, e.g., a copy of the decision on petition permitting such procedure, a copy of the Form 1449 (or equivalent). The petition does not indicate whether the paper references that are to be submitted as a numbered compendium, which numbering will correspond to the numbering in a PTO-1449 form.

(4) The information supplied via the bulk filing IDS will be updated approximately monthly.

Once past the initial IDS submission, the petition proposes the waiver to apply to updates.

Suspension of action: In view of the use of the instant application as a holding application (to contain a complete set of paper copies of reference citations, which can be consulted by the examiner when examining any of the other bulk filing applications that have a Form 1449 but not the paper copies of the references), the petition does not address how upon allowance the instant holding application will be treated. Whether the application can remain as the holding application without a suspension of action is not addressed. An alternative not discussed in the petition is that an alternate application may be designated as the holding application.

Termination: Petitioner does not seek a specific right of termination. Termination by the Office is to be by written notice to the attorney giving a 2 month period. Termination by Petitioner is to be by returning to compliance with 37 CFR § 1.98. The Office will accept and specifically reserve the right to terminate the waiver grant in regard to § 1.98(a)(2) without provision of reasons. Should a termination of the waiver be desired by the Office, the Office will provide written notice to the correspondence address of record. In such event, a two month period will be given where paper copies would have to be supplied in all applications where new citations are made. Termination by Applicant may be by returning to compliance with § 1.98(a)(2) without formal notice thereof and no transition/continuing period after termination is required.

Different Technology Centers: It appears from the petition that Petitioner intends to cite every reference cited in any of the 330 applications in every other application. No references will be omitted because they are less relevant or cumulative of those already of record in a particular application. At least 30 of the applications are of such divergent technologies that they are in 5 technology centers outside Technology Center 2800. The applications outside Technology Center 2800 will be examined in areas without convenient access to the paper copies in Technology Center 2800. The 5 other technology centers have requested more access to the paper copies than the relief granting this petition for all 330 applications will afford. It is not clear from the petition why citing every reference in every application when they are in such diverse technologies is necessary or required by § 1.56. Relieving petitioner of the burden of filing paper copies in applications outside Technology Center 2800 will create an additional burden on the examiners of those applications. It is also possible for applicant to comply with 37 CFR 1.98 for U.S. Patents and Patent application publications by submitting references via "e-IDS.[1]" Hence it appears that petitioner has not demonstrated why a waiver for those applications filed outside Technology Center 2800 is necessary.

Decision: 37 CFR 1.183 provides relief for extraordinary situations, when justice requires suspension of any requirement of the regulations which is not a requirement of the statutes. The instant petition urges that not only would applicant be spared the necessity of submitting duplicative paper copies of U.S. patents in over 300 applications, but also the Office would benefit from not having to handle and store the duplicative sets of copies. While there may be some negative effects from the Office's point of view in terms of making the copies available to different examiners handling the various applications, on balance, there is seen to be sufficient benefit to justify waiver in this instance for the applications filed in Technology Center 2800. With respect to those applications being examined outside

---

[1]The instructions for submitting an e-IDS can be downloaded at: http://www.uspto.gov/ebc/efs/downloads/documents/EFSePAVE_April23.pdf.

Technology Center 2800, on balance, the burden on petitioner is substantially less to provide an additional paper copy for each application with significantly less benefit to the Office waiving the requirement. Further with respect to other 30 applications the need to submit these references has not been established nor has petitioner addressed alternative methods of compliance.

Accordingly, the petition under 37 CFR 1.183 is granted to the extent indicated and under the terms and conditions as are set forth below.

The § 1.98(a)(2) requirement for (the submission of) a copy of each IDS citation in a bulk filing application will be waived in the bulk filing applications examined in Technology Center 2800 provided that the following 9 conditions are complied with:

1) Three paper copies of each IDS citation are or have been submitted to the Office;

2) Each (bulk filing) application for which waiver of § 1.98(a)(2) is desired refers to the instant holding application, such as by a claim of priority under 35 U.S.C. 120, or as containing related technology;

3) The information is or has also been cited in the holding application;

Note: Applicant is not required to cite in each bulk filing application every item of information that is cited in the instant holding application. Items should be cited in each bulk filing application on the basis of relevancy and materiality to the particular claims in the bulk filing application and what each piece of information teaches.

A waiver is not granted (for the requirement to supply a paper copy of an IDS citation in another bulk filing application) where the citation is not, or has not been, made in the instant holding application.

4) A copy of this Decision is filed in each bulk filing application for which waiver is requested;

5) Explanatory information related to a particular citation, such as the concise explanation of a foreign language reference under § 1.98(a)(2), once submitted in the holding application must be supplied in each bulk filing application where the citation is made.

6) The Office accepts and specifically reserves the right to terminate the waiver grant in regard to § 1.98(a)(2) without provision of reasons. In such event, a two month period will be given where paper copies would have to be supplied in all applications where new citations are made. Should a termination of the waiver be desired by the Office, the Office will provide written notice to the correspondence address of record. Termination by applicant may be by returning to compliance with § 1.98(a)(2) without formal notice thereof and no transition/continuing period after termination is required.

7) The grant of the § 1.183 petition re § 1.98(a)(2) does

not indicate that the Office would favorably treat a petition to suspend action under § 1.103(a) should the instant holding application be allowed. Issuance of the instant application as a patent is not seen to terminate its usefulness either: (1) as a holding application for references by examiners working on other related applications, or (2) as a vehicle for the storage of references to be cited even after the patent issues (35 U.S.C. 301, 37 CFR 1.501, and MPEP 2202). Should the instant application become abandoned, the issue of continued introduction of paper copies of new citations could be taken up at that time. The Office, however, may consider suspending or taking other appropriate action in the instant holding application in the event the holding application is allowed, if it is in the best interest of the Office to do so.

8) There will be no waiver of any aspects of 37 CFR 1.98 in any application after allowance or final rejection of that application.

9) The copies will be submitted as a compendium with the reference numbering in the Form 1449 corresponding to the presentation of the references in the compendium.

Part IV. Summary

The petition under 37 CFR 1.182 requesting special treatment by creation of special digests and accepting compact disc submissions is dismissed because there is no showing that the relief granted below under 37 CFR 1.183 is not sufficient for compliance with 37 CFR 1.56.

The petition under 37 CFR 1.183 agreeing to supply three copies of each IDS citation in a holding application and requesting waiver of the paper copy requirement for submission in every related application under § 1.98(a)(2) is granted for those applications examined in Technology Center 2800, however, the following is not agreed to:

- the waiver of supplying a paper copy of each reference in applications examined outside Technology Center 2800.
- the creation of Official search classifications and the mandatory search thereof.
- The establishment of an Official search classification containing all of the references cited in the IDS and that the examiners be required to search that classification.

Part V. Further Correspondence

Any correspondence with respect to this matter should be addressed as follows:

By mail: Assistant Commissioner for Patents
Box DAC
Washington, D.C. 20231

Docket Number	Application #	Art Unit
	10125540	1631
	9984471	1641
	9624877	1725
	9911539	1725
	9911493	1743
	9832354	1753
	9842735	1765
	9884981	1765
	9911702	1765
	9921910	1765
	9975930	1765
	10124460	1765
	09273929	1765
	09662390	1765
	9905110	1772
	9621771	1775
	9870830	1775
	9871958	1775
	9901109	1775
	9960402	1775
	09274268	1775
	09465623	1775
	09813779	1775
	9865446	2631
	9930171	2633
	09617640	2633
	9910032	2663
	10152783	2673
	09607239	2681
	09607420	2682
	9900885	2811
	10125486	2811
	10128262	2811
	10141876	2811
	10145734	2811
	10150065	2811
	09607386	2811
205954US-8737-8737-99	09607434	2811
20568ous-8737-8737-99	09712425	2811
205890US-8737-8737-99	09721566	2811
2061 ssus-8737-s737-ss	09766046	2811
208836US-8737-8737-99	09861636	2811
210044US-8737-8737 99	09884150	2811
210790US.-8737-8737-99	09897965	2811
210260US-8737-8737-99	09900887	2811
211327US-8737-8737-99	09905869	2811
211318US-8737-8737-99	09905935	2811
211467U5-8737-8737-99	09907705	2811
211685US-87378737-99	09908695	2811
211535US-8737-8737-99	09908860	2811
211689US-8737-8737-99	09908886	2811
211581US-8737-8737-99	09909936	2811
211891 US-8737-8737-99	09911455	2811
211804US-8737-8737-99	09911456	2811
211642US-8737-8737-99	09911465	2811
211805US-8737-8737-99	09911475	2811
213020US-8737-8737-99	09930247	2811

Docket Number	Application #	Art Unit
214975US-8737-8737-99	09978096	2811
216416 US-8737-8737-99	09994066	2811
217300US-8737-8737-99	10017596	2811
217730US,8737-8737-99	10026446	2811
219105US-8737-8737-99	10062429	2811
220526 US-8737-236694-99	10091452	2811
	10137383	2812
	10150066	2812
205958US-8737-8737-99	09678372	2812
	09801881	2812
209888 US-8737-8737-99	09884082	2812
210236US-8737-8737-99	09900921	2812
210800US,8737-8737-99	09903741	2812
211147US-8737-8737-99	09903784	2812
211214US-8737-8737-99	09904892	2812
211398US-8737 8737-99	09905981	2812
211691 US-8737-8737-99	09908902	2812
211699US-8737-8737-99	09909941	2812
211574US-8737-8737-99	09910022	2812
211644US-8737-8737.99	09910754	2812
21217005-8737-8737-99	09921901	2812
21288605-8737-8737-99	09929021	2812
216420US-8737-8737-99	09993523	2812
218840US-8737-8737-99	10059411	2812
	10134506	2813
205962US-8737-8737-99	09624526	2813
205881 US-8737-8737-99-CIP	09780119	2813
291419US-8737-8737-99	09906783	2813
21189705.8737-8737-99	09911496	2813
211806US-8737-8737-99	09911496	2813
29 2171 US-8737-8737-99	09921905	2813
215930US-8737-8737-99	09986899	2813
	9930275	2814
	10137369	2814
	10140939	2814
205949US-8737-8737-99	09607408	2814
205924US-8737-8737-99	09621779	2814
205925US-8737 8737-99	09624699	2814
205917US-8737-8737-99	09642558	2814
205906US-8737-8737-99-CIP	09740219	2814
208835US-8737-8757-99	09861638	2814
208833US-8737-8737-99	09861639	2814
209079US-8737-8737-99	09865428	2814
209117US-8737-8737-99	09865429	2814
209080US-8737-8737-99	09865448	2814
208889US-8737-8737-99	09865449	2814
209995US-8797-8737-99	09882063	2814
210295US-8737-8737-99	09897059	2814
210789US-8737-8737-99	09897968	2814
211334US-8737-8737-99	09905980	2814
211323US-8737-8737-99	09906138	2814
211662US-8737-8737-99	09908888	2814
210139US-8737-8737-99	09909939	2814
211580US-8737-8737-99	09910019	2814
211719US-8737-8737-99	09911458	2814
211920US-x737-8737-99	09911459	2814
211720US-8737-8737-99	09911478	2814
21195505-8737-8737-99	09911488	2814

Docket Number	Application #	Art Unit
21202205-8737-8737-99	09911518	2814
21241905-8737$737-99	09921898	2814
21287705-8737-8737-99	09929018	2814
21294505-8737-8737-99	09929748	2814
212949US-8737-8737-99	09930188	2814
212960US-8737-8737-99	09930259	2814
212958US-8737-8737-99	09930278	2814
215560US-8737-8737-99	09983859	2814
21 B359US 8737-8737-99	10053588	2814
205920US-8737-8737-99-C1P	09607207	2815
20591 OUS-8737-8737-99	09621130	2815
205927US-8737-8737-99	09624691	2815
205918US-8737-8737-99	09629283	2815
205877US-8737-8737-99	09692568	2815
205887US-8737-8737-99	09733181	2815
205922US-8737-8737-99-C1P	09755340	2815
205961 US-8737-8737.99	09755341	2815
205960uS-8737-8737-99	09755691	2815
205966us-8737-8737-99-cIP	09824376	2815
205967US-8737-8737-99-CIP	09824615	2815
209279US-8737-8737-99	09849172	2815
209340US-8737'8737.99	09870592	2815
' 209997US-8737-8737-99	09882062	2815
210140US-8737-8737-99	09884982	2815
210243US-8737-8737-99	09900882	2815
210798US-8737-8737-99	09901601	2815
210827US-8737-8737-99	09903742	2815
211400US-8737-8737-99	09904841	2815
210828US-8737-8737-99	09905932	2815
211677US-8737.-8737-99	09908892	2815
211675US-8737-8737-99	09910021	2815
211645US 8737-8737-99	09911412	2815
211894US-8737-8737-99	09911490	2815
212423US-8737-8737-99	09911491	2815
211896US-8737-8737-99	09911542	2815
2114.71 US-8737-8737-99	09911691	2815
21202405-8737-8737-99	09918801	2815
212543US-8737-8737-99	09924481	2815
21266905-8737-8737-99	09927396	2815
212761 US-8737-8737-99	09928356	2815
212954US-8737-8737-99	09929020	2815
29 287805-8737-8737-99	09929022	2815
212947US-8737-8737-99	09929261	2815
212944 US-8737-8737-99	09930145	2815
29290605-8737-8737-99	09930175	2815
212948US-8737-8737-99	09930176	2815
213012US-8737-8737-99	09930260	2815
212953US-8737-873799	09930261	2815
212959 US-8737-8737-99	09930276	2815
213130US-8737-8737-99	09934836	2815
215512US•8737-8737-99-CIP	09983854	2815
215878US-8737-.8737-99-DIV	09986034	2815
219625US-8737-8737-99-DIV	10076450	2815
211573US-8737-8737-99	09909938	2816
211637US-87378737-99	09910799	2817
	10161743	2818
205955US-8737-8737-99	09609071	2818
205913U8~8737-8737•99	09656337	2818
205957US-8737-8737-99	09712875	2818

Docket Number	Application #	Art Unit
205908US$737-8737-99	09740268	2818
206160US-8737-8737-99	09753808	2818
205909US-.8737-8737-99	09822499	2818
205969US,8737-8737-99	09822499	2818
205971 US-8737-8737-99	09824259	2818
205970US-8737-8737-99	09824388	2818
209278US-8737-8737-99	09849159	2818
209280US-8737-8737-99-CIP	09859700	2818
209341 US-8737-8737-99	09870589	2818
209164US-8737-8737-99	09870828	2818
209166US-8737-8737-99	09870829	2818
210132US-8737-8737-99	09884149	2818
210148US-8737-8737-99	09885409	2818
211314US-8737-8737-99	09905868	2818
211422US-8737-8737-99	09906769	2818
211472US-8737-8737-99	09908898	2818
211670U&8737-8737-99	09910018	2818
211686US-8737-8737-99	09910020	2818
211640US-8737-8737-99	09910798	2818
21195805-8737-8737-99	09911429	2818
211584US-8737-8737-99	09911448	2818
211578US-8737-8737-.99	09911628	2818
211425US-8737-873799	09911629	2818
215562 US-8737-8737-99	09983869	2818
217459US-8737-8737-99	10020900	2818
218843US 8737-8737-99	10059409	2818
215820US 8737-8737-99	09986534	2821
208826US-8737-8737-99	09861637	2822
209078US-8737-8737-99	09865447	2822
209077US-8737-8737-99	09866637	2822
210792US-8737-8737-99	09899997	2822
211469 US-8737-8737-99	09907707	2822
211534US-8737-8737-99	09908707	2822
211684US-8737-8737-99	09908887	2822
211673US-8737-8737-99	09908897	2822
211674US-8737-8737-99	09909937	2822
211956 US-8737-8737-99	09911447	2822
211850US.8737-8737-99	09911507	2822
212021 US-8737-873798	09911517	2822
21202505-87378737-99	09911627	2822
212131 US-8737-8787-99	09919967	2822
21290705-8737-8737-99	09930170	2822
	10136324	2823
205959US-87378737•99	09689583	2823
210150US-8737-8737-99	09884983	2823
210244US-8737-8737-99	09900883	2823
210216US-8737-8737-99	09903743	2823
211413US-8737-8737-99	09905863	2823
211315US-8737-8737-99	09905933	2823
211474US-8737-8737-99	09907703	2823
211555US-8737-8737-99	09908883	2823
211671 US-8737-8737-99	09910023	2823
211676US-8737-8737-99	09910034	2823
211618US-8737-8737-99	09910753	2823
29 2955US-8737-8737-99	09930444	2823
215873US-8737-8737-99-D IV	09986024	2823
216598US-8737-8737-99-DN	09993514	2823
205889US-8737737-99	09733688	2824
205914US-8737-8737-99	09795784	2824

Docket Number	Application #	Art Unit
210259US-8737-873799	09897128	2824
210784US-8737-8737-99	09905098	2824
211577US-8737-9737-99	09909905	2824
21301 OUS-8737-8737-99	09930308	2824
	10125410	2825
205912US-8737$737 99	09624690	2825
205893US-8737-873799	09625100	2825
210788US-8737-8737-99	09901110	2825
211317US-8737-8737-99	09906730	2825
211688US-8737-8737-99	09908891	2825
211579US-8737-8737-99	09909940	2825
211917US-8737-8737-99	09911460	2825
205973US-8737-8737-99	09584601	2826
205938US-8737-8737-99	09624296	2826
205934US-8737-8737.89	09624754	2826
205884US-8737-8737-99-CIP	09758723	2826
205968US-8737-8737-99	09824273	2826
206669US-8737-873799	09838273	2826
209491 US-8737-8737-99-CIP	09840213	2826
209284U S,B737-8737-99	09842734	2826
209281 US-8737-8737-99	09853744	2826
209336US-8737-8737-99	09870834	2826
209505US-8737-8737-99	09874984	2826
210826US-8737-873799	09904894	2826
210786US-8737-87379	09905902	2826
211326US-8737-8737-99	09905903	2826
211328US-8737-8737-99	09905930	2826
211325US-8737-8737-99	09905934	2826
211431 US-8737-8737-99	09906784	2826
211468US-8737-8737-99	09907704	2826
211672 US-8737-8737-99	09910024	2826
211582US-8737-8737-99	09910044	2826
21202005-8737-8737-99	09911444	2826
211724us-6737-8737-99	09911464	2826
211803US-8737-8737-99	09911473	2826
211690US-8737-8737-99	09911484	2826
211890US-8737-8737-99	09911494	2826
211722US-8737-8737-99	09911543	2826
212421 U&8737-8737-99	09921894	2826
292946US-8737-8737-99	09929024	2826
213009US-8737-8737-99	09930254	2826
21290905-8737-8737-99	09930270	2826
	9985757	2828
209282U5-8737•873799	09852109	2828
210787US-8737-8737-99	09901905	2828
210785US-8737-8737-99	09903740	2828
210257US-8737-8737-99	09910035	2828
21217305-8737-8737-99	09921900	2828
213011 US-8737-8737-99	09930243	2828
	10166196	2829
206166US-8737-8737-99	09425945	2829
209696US-8737-8737-99	09882064	2829
211324US-8737-8737-99	09904895	2829
211332 US-87378737-99	09905116	2829
211893US-8737-8737-99	09911445	2829
211723US-8737-8737-99	09911446	2829
21181 OUS-8737-8737-99	09911495	2829
215295US-8737-8737-99	09983326	2829

Docket Number	Application #	Art Unit
205915US-8737-9737-99	09624803	2834
211916US-8737-8737-99	09911487	2839
217731 US-8737-8737-99	10026812	2841
	10151950	2851
217354US-8737-8737-99	10020898	2861
205972US-8737-873799	09624698	2872
205939US-8737 837-99	09669602	2873
205950U"737-8737-99	09607236	2874
205951 US-8737-8737-99	09607744	2874
205947US-8737-8737-99	09608807	2874
209409U$-8737-8737-99	09870836	2874
209162US-8737r8737-99	09870837	2874
217678US-8737-8737-99	09908885	2874
210824US-8737-8737-99	09909906	2874
211854US-8737-8737-99 -	09911457	2874
211808US-8737-8737-99	09911466	2874
211807US-8737-8737-89	09911469	2874
211911 US-8737-8737-99	09911472	2874
21195705-8737-8737-99	09911492	2874
21209905-8737-8737-99	09918802	2874
21209805-8737-8737-99	09919927	2874
212950US-8737-8737-99	09929019	2874
215539US-8737-8737-99-CONT	09983866	2874
205949 US-8737-8737-99	09607237	2876
205944US-8737-8737 99	09609262	2877
209403US-8737-8737-99	09870831	2877
209338US-8737-8737-99	09870832	2877
209695US-8737-8737-99	09882067	2878
209402US'.8737-8737-99	09870835	2881
210794US-8737-8737-99	09899996	2881
211427US-8737-8737-99	09906782	2881
21242505-8737-8737-99	09921895	2881
212426US-8737.-8737-99	09921896	2881
212590US-8737-8737-99	09927393	2881
209342US-87378737-99	09870833	2882
	9905115	3662
	9911420	3663
	09607722	3736

By FAX: (703) 872-9005

By hand: Crystal Plaza Four, Suite 3C23
2201 South Clark Place
Arlington, VA 22202

Telephone inquiries should be directed to Michael L. Lewis at (703)306-5585.

Robert J. Spar
Director
Office of Patent Legal Administration
Office of the Deputy Commissioner
for Patent Examination Policy

Attachment: TC Assignment Appendix

UNITED STATES PATENT AND TRADEMARK OFFICE

COMMISSIONER FOR PATENTS
UNITED STATES PATENT AND TRADEMARK OFFICE
P.O. BOX 1450
ALEXANDRIA, VA 22313-1450
WWW.USPTO.GOV

Paper No. 13

PERKINS COIE LLP
PATENT-SEA
P.O. BOX 1247
SEATTLE WA 98111-1247

COPY MAILED
MAR 29 2004
OFFICE OF PETITIONS

In re Application of
Bradford Evan Gliner et al.
Application No. 09/978,134
Filed: October 15, 2001
Attorney Docket No. 337348021US
Title: SYSTEMS AND METHODS FOR AUTOMATICALLY OPTIMIZING STIMULUS PARAMETERS AND ELECTRODE CONFIGURATIONS FOR NEURO-STIMULATORS

DECISION ON PETITION

This is a decision on the petition filed March 18, 2004, pursuant to 37 C.F.R. §1.137(b[1]), to revive the above-identified application.

A grantable petition pursuant to 37 CFR 1.137(f) must be accompanied by:

(1) Notification of the filing of an application in a foreign country or under a multinational treaty that requires 18 month publication[2];
(2) The petition fee as set forth in 37 C.F.R. § 1.17(m), and;
(3) A statement that the entire delay in filing the notice from the date that the notice was due under 35 U.S.C. §122(b)(2)(B)(iii) until the date the notice was filed was unintentional. The Commissioner may require additional information where there is a question whether the delay was unintentional.

On March 18, 2004, the instant petition was filed with the Office. Petitioner states that the "petition is being filed prior to the issuance of the Notice of Abandonment. Under current USPTO practice, further information regarding the abandonment is not required[3]." Unfortunately, such is not the case. There are two rather critical pieces of information which are indeed required.

1 The petition is properly treated as a petition under 37 C.F.R. §1.137(f).
2 See PTO/SB/36 and paragraph on PTO/SB/64a for further information. Both may be downloaded at http://www.uspto.gov/web/forms/index.html.
3 Petition, page 2.

First, although the petition is filed under 37 C.F.R. §1.137(b), the facts set forth in the first paragraph on the first page of the petition, coupled with the inclusion of the notice of rescission of prevous nopnpublication request, make it clear that the Petitioner intended to file a petition under 37 C.F.R. §1.137(f). However, nowhere in the petition is it set forth that the instant nonprovisional application is the subject of an application filed in either a foreign country or under a multinational agreement.

Secondly, notification of the filing of the foreign or international application did not accompany this filing.

As such, petitioner has not met the first requirement above.

In view of the foregoing, this petition is **DISMISSED**. Any response to this decision must be submitted within **TWO (2) MONTHS** from the mail date of this decision. Extensions of time under 37 CFR 1.136(a) are permitted. The reconsideration request must include a cover letter entitled "Renewed Petition under 37 CFR 1.137(f)." Petitioner must first state that a foreign or international application has been filed, and then submit the date which the foreign or international application was filed.

Petitioner is reminded that if an applicant makes a nonpublication request and then rescinds the nonpublication request before or on the date a counterpart application is filed in an eighteen-month publication country, the application will be treated as if the nonpublication request were never made, and any petition fee would be refunded.

The reply to this letter may be submitted by mail[4], hand-delivery[5], or facsimile[6].

The reply should display "Please deliver to Paul Shanoski, c/o Office of Petitions" in a prominent manner. The Petitioner may wish to consider telephoning the undersigned at the number provided below to confirm that the documents were delivered to the undersigned. Please note that the delivery process within the PTO can take as much as three weeks.

The application file will be retained in the Office of Petitions for two (2) months.

Telephone inquiries regarding *this decision* should be directed to the undersigned at (703) 305-0011.

Paul Shanoski

Paul Shanoski
Attorney
Office of Petitions
United States Patent and Trademark Office

4 Mail Stop Petition, Commissioner for Patents, United States Patent and Trademark Office, P.O. Box 1450, Alexandria, VA, 22313-1450.

5 Customer Window, Mail Stop Petition, Crystal Plaza Two, Lobby, Room 1B03, Arlington, Virginia 22202.

6 (703) 872-9306 - please note this is a central facsimile number, and as such, there will be a delay in the delivery of the facsimile to the undersigned.

UNITED STATES PATENT AND TRADEMARK OFFICE

COMMISSIONER FOR PATENTS
UNITED STATES PATENT AND TRADEMARK OFFICE
P.O. BOX 1450
ALEXANDRIA, VA 22313-1450
WWW.USPTO.GOV

Paper No. 16

PERKINS COIE LLP
PATENT-SEA
P.O. BOX 1247
SEATTLE WA 98111-1247

COPY MAILED
MAY 0 5 2004
OFFICE OF PETITIONS

In re Application of
Bradford Evan Gliner et al.
Application No. 09/978,134
Filed: October 15, 2001
Attorney Docket No. 337348021US
Title: SYSTEMS AND METHODS FOR AUTOMATICALLY OPTIMIZING STIMULUS PARAMETERS AND ELECTRODE CONFIGURATIONS FOR NEURO-STIMULATORS

DECISION ON RENEWED PETITION UNDER 37 C.F.R. §1.137(F)

This is a decision on the renewed petition filed April 14, 2004, pursuant to 37 C.F.R. §1.137(b[1]), to revive the above-identified application.

A grantable petition pursuant to 37 CFR 1.137(f) must be accompanied by:

(1) Notification of the filing of an application in a foreign country or under a multinational treaty that requires 18 month publication[2];
(2) The petition fee as set forth in 37 C.F.R. § 1.17(m), and;
(3) A statement that the entire delay in filing the notice from the date that the notice was due under 35 U.S.C. §122(b)(2)(B)(iii) until the date the notice was filed was unintentional. The Commissioner may require additional information where there is a question whether the delay was unintentional.

On March 18, 2004, the original petition was filed with the Office, which was dismissed via the mailing of a decision on March 29, 2004, for failure to set forth that the instant nonprovisional application is the subject of an application filed in either a foreign country or under a multinational agreement, and for failure to provide notification of the filing of the foreign or international application.

1 The petition is properly treated as a petition under 37 C.F.R. §1.137(f).
2 See PTO/SB/36 and paragraph on PTO/SB/64a for further information. Both may be downloaded at http://www.uspto.gov/web/forms/index.html.

With the renewed petition, Petitioner has established that the instant nonprovisional application is the subject of an application filed in an international application on October 15, 2002. However, the United States Patent and Trademark Office was unintentionally not notified of this filing within 45 days subsequent to the filing of the subject application in an international application.

In view of the above, this application became abandoned pursuant to 35 U.S.C. §1.22(b)(2)(B)(iii) and 37 C.F.R. §1.213(c) for failure to timely notify the Office of the filing of an application under a multilateral international agreement that requires publication of applications 18 months after filing.

The petition under 37 C.F.R. §1.137(f) is **GRANTED**.

Petitioner has submitted the notification of the international filing, paid the petition fee, and has made the proper statement of unintentional delay. Petitioner has further submitted a notice of rescission of previous nonpublication request.

The instant petition has been found to be in compliance with 37 C.F.R. §1.137(f). Accordingly, the failure to timely notify the Office of the international filing within 45 days after the date of filing of such international application as provided by 35 U.S.C. §122(b)(2)(B)(iii) and 37 C.F.R. §1.213(c) is accepted as having been unintentionally delayed.

The previous Request and Certification under 35 U.S.C. §122(b)(2)(B)(i), filed with the original application papers, has been rescinded. A Notice Regarding Rescission of Nonpublication Request which sets forth the projected publication date of August 12, 2004 accompanies this decision on petition.

After this decision is mailed, the application will be forwarded to Technology Center 3700 for further processing.

Telephone inquiries concerning *this decision* should be directed to the undersigned at (703) 305-0011.

Paul Shanoski
Senior Attorney
Office of Petitions
United States Patent and Trademark Office

UNITED STATES PATENT AND TRADEMARK OFFICE

Commissioner for Patents
United States Patent and Trademark Office
P.O. Box 1450
Alexandria, VA 22313-1450
www.uspto.gov

PERKINS COIE LLP
PATENT-SEA
P.O. BOX 1247
SEATTLE WA 98111-1247

COPY MAILED

JAN 1 0 2007

OFFICE OF PETITIONS

In re Application of :
Bradford Evan Gliner et al :
Application No. 09/978,134 :
Filed: October 15, 2001 :
Attorney Docket No. 337348021US :

ON PETITION

This is a decision on the petition, filed December 29, 2006, under 37 CFR 1.313(c)(2) to withdraw the above-identified application from issue after payment of the issue fee.

The petition is **GRANTED**.

The above-identified application is withdrawn from issue for consideration of a submission under 37 CFR 1.114 (request for continued examination). See 37 CFR 1.313(c)(2).

Petitioner is advised that the issue fee paid on October 26, 2006 in the above-identified application cannot be refunded. If, however, the above-identified application is again allowed, petitioner may request that it be applied towards the issue fee required by the new Notice of Allowance.[1]

Telephone inquiries should be directed to the undersigned at (571) 272-3208.

The examiner of Technology Center AU 3762 will consider the request for continued examination under 37 CFR 1.114.

Karen Creasy

Karen Creasy
Petitions Examiner
Office of Petitions

---

[1] The request to apply the issue fee to the new Notice may be satisfied by completing and returning the new Issue Fee Transmittal Form PTOL-85(b), which includes the following language thereon: "Commissioner for Patents is requested to apply the Issue Fee and Publication Fee (if any) or re-apply any previously paid issue fee to the application identified above." Petitioner is advised that, whether a fee is indicated as being due or not, the Issue Fee Transmittal Form **must** be completed and timely submitted to avoid abandonment. Note the language in bold text on the first page of the Notice of Allowance and Fee(s) Due (PTOL-85).

UNITED STATES PATENT AND TRADEMARK OFFICE

COMMISSIONER FOR PATENTS
UNITED STATES PATENT AND TRADEMARK OFFICE
P.O. BOX 1450
ALEXANDRIA, VA 22313-1450
www.uspto.gov

MAILED

APR-22 2004

DIRECTOR
TECHNOLOGY CENTER 3600

MCDONNELL BOEHNEN HULBERT & BERGHOFF
300 SOUTH WACKER DRIVE
SUITE 3200
CHICAGO, IL 60606

In re application of
Scott A. Rosenberg, et al.
Application No. 09/978,144
Filed: October 15, 2001
For: METHOD AND SYSTEM FOR DYNAMIC AD PLACEMENT

: **DECISION ON REQUEST**
: **FOR WITHDRAWAL OF**
: **ATTORNEY**

This is a decision on the request filed on May 14, 2003, under 37 CFR 1.36 and MPEP 402.06, requesting permission to withdraw as the attorney of record in the above-identified application.

The request is **NOT APPROVED as MOOT**.

Under 37 CFR 1.36 an attorney may withdraw only upon application to and approval by the Commissioner. It should be noted that a withdrawal is effective when approved, not when filed. Besides giving due notice to his or her client and delivering to the client all papers and property to which the client is entitled as specified under 37 CFR 10.40, approval of such a request requires that the following conditions be met:

A) Each attorney of record must sign the notice of withdrawal, or the notice must contain a clear indication of one attorney signing on behalf of another, because the Office does not recognize law firms;

B) A proper reason for the withdrawal as enumerated in 37 CFR 10.40(b) or subsection (1)-(6) of 37 CFR 10.40(c) must be provided; and

C) If withdrawal is requested in accordance with 37 CFR 10.40(c) above, there must be at least 30 days between approval of the withdrawal and the later of the expiration date of a time period for reply or the expiration date of the period which can be obtained by a petition and fee for extension of time under 37 CFR 1.136(a).

The request to withdraw as attorney in the above-identified application is not approved as moot because the power of attorney has already been withdrawn. A Notice to that effect was mailed July 14, 2003. The correspondence address has been changed to the following:

MCDONNELL BOEHNEN HULBERT & BERGHOFF
300 SOUTH WACKER DRIVE
SUITE 3200
CHICAGO, IL 60606

Randolph A. Reese
Special Programs Examiner
Patent Technology Center 3600
(703) 308-2121

RAR/cps: 4/5/04

cc:

FENWICK & WEST LLP
SILICON VALLEY CENTER
801 CALIFORNIA STREET
MOUNTAIN VIEW, CA 94041

UNITED STATES PATENT AND TRADEMARK OFFICE

Commissioner for Patents
United States Patent and Trademark Office
P.O. Box 1450
Alexandria, VA 22313-1450
www.uspto.gov

Fitch, Even, Tabin & Flannery
1801 K Street, Suite 401L
Washington, DC 20006

COPY MAILED

DEC 13 2005

OFFICE OF PETITIONS

In re
Rogers
Application No. 09/978,178
Filing Date: October 17, 2001
Attorney Docket:7570/73272

RECONSIDERATION OF
PATENT TERM ADJUSTMENT

This decision is ins response to Applicant's Application for Patent Term Adjustment Under 37 CFR 1.705(b) timely[1] filed on August 31, 2005 requesting that the Office adjust the PTA calculation at the time of the mailing of the notice of allowance from a determination of two hundred and seventy-three (273) days to a determination of three hundred and seventy-six (376) days.

Applicant's application for PTA is **GRANTED.** The Office will adjust the PTA calculation reflected in PAIR to reflect a calculation of 376 days at the time of the mailing of the notice of allowance.

Applicants assert that the Office erred in the determination of PTA at the time of the mailing of the notice of allowance. Applicant agrees with the Office determination of 400 days of Office delay for the Office failing to meet the requirements of 37 CFR 1.702(a)(1) within 14 months, a four hundred (400) day delay. In addition, Applicant agrees with the two day of PTA reduction under 37 CFR 1.704(b) for the reply filed by applicant on August 19, 2002. However, applicant disputes the one hundred and twenty-five (125) day reduction for the submission of a notice of appeal on May 23,2005. Applicant assert that the notice of appeal was filed on February 9,2005 and that no appeal was filed on May 23, 22005 but that an RCE was filed on May 23, 2005. Applicants believe that the reduction to PTA should have only been 22 days not one hundred and twenty-five days as the Office calculated.

Applicant's argument is persuasive. The record reflects that the notice of appeal was filed on February 9, 2005 not May 23, 2009. The Office errantly entered the date of May 23, 2005 as a

[1] Issue fee was paid on November 16, 2005.

date that a notice of appeal was filed. The record reflects that an RCE was filed on May 23, 2005. Accordingly, the Office should have assessed a reduction of 22 days.[2] Overall, the Office delay at the time of the mailing of the notice of allowance is 400 days and applicant delay was 24 days. The correct amount of PTA at the time of the mailing of the notice of allowance is 376 days as suggested by applicant.

After the mailing of the notice of allowance, the Office will forward this application to the Office of Patent Publications. Any delay in issuing the application more than four months after the payment of the issue fee will be reflected in the issue notification letter that is mailed to applicant approximately three weeks prior to the issue date.

The Office has assessed the $200.00 fee to deposit account 06-1135. No additional fees are required by the Office in this matter.

Any questions concerning this decision should be directed to Kery Fries, Office of Patent Legal Administration, at 571-272-7757.

Kery Fries

Kery Fries
Senior Legal Advisor
Office of Patent legal Administration
Office of Deputy Commissioner
for Patent Examination Policy

cc: Adjusted PAIR calculation

[2] The reduction began on January 19, 2005 the day after the 3 month period expired and ended on February 9, 2005.

UNITED STATES PATENT AND TRADEMARK OFFICE

COMMISSIONER FOR PATENTS
UNITED STATES PATENT AND TRADEMARK OFFICE
WASHINGTON, D.C. 20231
www.uspto.gov

Paper No. 21

LUIS J RODRIGUEZ
60 FOURTH STREET
SOUTH ORANGE NJ 07079

COPY MAILED

MAR 0 5 2003

OFFICE OF PETITIONS

In re Application of
Rodriguez
Application No.09/978,215
Filed: October 15, 2001
For: Self Sealing Letter Sheets:

: ON PETITION

This application is before this office to consider the paper filed January 9, 2003 styled as a "petition to the Commissioner" which *inter alia*, requests under 37 CFR 1.183 "any suspension of the rules related to any eventual untimeliness of the petition" which is being treated as a petition under 37 CFR 1.183 to waive 37 CFR 1.181(f) which requires that a petition be filed within two months of the action or notice from which relief is requested..

The petition is **dismissed.**

The USPTO will not decide the merits of this or any petition not accompanied by the requisite fee. A petition under 37 CFR 1.183 requires the $130 fee set forth in 37 CFR 1.17(h). See 37 CFR 1.183. Since the petition filed January 9, 2003, was not also accompanied by the requisite fee, the request for waiver of the timeliness requirement is dismissed.

This application is being forwarded to Technology Center AU 3727 to further consider the petitions filed January 9, 2003, and October 17, 2002.

Telephone inquiries relevant to this decision should be directed to the undersigned at (703) 305-1820.

Brian Hearn

Brian Hearn
Senior Petitions Examiner
Office of Petitions
Office of the Deputy Commissioner
for Patent Examination Policy

UNITED STATES PATENT AND TRADEMARK OFFICE

COMMISSIONER FOR PATENTS
UNITED STATES PATENT AND TRADEMARK OFFICE
WASHINGTON, D.C. 20231
www.uspto.gov

Paper No. 23

LUIS J RODRIGUEZ
60 FOURTH STREET
SOUTH ORANGE NJ 07079

COPY MAILED

APR 0 2 2003

OFFICE OF PETITIONS

In re Application of	:
Rodriguez	: CORRECTED DECISION
Application No. 9/978,215	: ON PETITION
Filed: October 15, 2001	:
For: Self Sealing Letter Sheets:	:

This is a corrected decision on the paper filed January 9, 2003 styled as a "petition to the Commissioner" which *inter alia*, requests under 37 CFR 1.183 "any suspension of the rules related to any eventual untimeliness of the petition" which is being treated as a petition under 37 CFR 1.183 to waive 37 CFR 1.181(f) which requires that a petition be filed within two months of the action or notice from which relief is requested..

The petition is **dismissed.**

The decision of March 5, 2003 is vacated, as inspection of USPTO financial records reveals that the necessary petition fee was received.

Petition seeks waiver of the two month time limit set forth in 37 CFR 1.181(f) for initiating, on petition, review of subject matter that is not also subject to appeal. Petitioner gives as the reason for the request that he had to reply to Office communications in four other applications that were all mailed within a relatively short time period.

In order for grant of any petition under 37 CFR 1.183, petitioner must show (1) that this is an extraordinary situation where (2) justice requires waiver of the rule. In re Sivertz, 227 U.S.P.Q. 255, 256 (Comm'r Pat. 1985). Petitioner has not shown that either condition exists in this case.

As to petitioner's related applications mentioned in the petition, inspection of USPTO records reveals: in 09/978,240 a non final rejection was mailed June 18, 2002, an interview was held on or about September 11, 2002, and applicant's reply was received September 17, 2002; in 09/978,264, a final rejection was mailed October 23, 2002, an interview was conducted on or about October 29, 2002, applicants reply was filed November 12, 2002; in 09/812,664 a final rejection was mailed October 16, 2002, applicant's reply was filed

November 4, 2002, and in this application a final rejection was mailed September 11, 2002, and applicant's reply was filed October 17, 2002.

Thus in 2 of the four applications involved, applicant had already filed his replies before he even had received the other two office actions and in the other two cases has filed replies within at most 5 weeks of the Office actions, even though each office action accorded applicant three months within which to reply and of course applicant could have extended each period under 37 CFR 1.136(a) to the maximum six month period.

Further, whether applicant chose to immediately see to any petitionable matter(s) in this or any other application within the non extendable period of two months set by 37 CFR 1.181(f) from the action or inaction complained of, as opposed to promptly preparing a reply to the merits of any rejection, for which petitioner had an extendable period of at least three months and up to six months, was a circumstance entirely within his control. That is, having made his tactical decision(s) as to how best to allocate his time to proceed in this or any other application, petitioner cannot now be heard to complain.

While petitioner may now wish to belatedly address petitionable matters herein, 37 CFR 1.183 should not be considered a panacea for applicant's tactical errors in prosecution. See, Nitto Chem. Indus. Co. v. Comer, 39 USPQ2d 1778, 1782 (D.D.C. 1994) (circumstances are not extraordinary, and do not require waiver of the rules, when a party makes an avoidable mistake in filing papers); Hahn v. Wong, 892 F.2d. 1028, 13 USPQ2d 1313 of (Fed. Cir. 1993)(ignorance of the provisions of the rules or the substantive requirements of law is not a basis for extraordinary relief to consider an additional submission); Huston v. Ladner, 973 F. 2d. 1564, 1567-68, 23 USPQ2d 1910, 1913-14, 1917(Fed. Cir. 1992)(USPTO did not abuse its discretion in refusing to consider a belated submission of additional evidence); Vincent v. Mossinghoff, 230 USPQ 621, 625 (D.D.C. 1985)(petitioner's failure to heed notice and the rules of practice will not be permitted to shift, in equity his lack of diligence onto the USPTO). Furthermore, equitable powers should not be invoked to excuse the performance of a condition by a party that has not acted with reasonable, due care and diligence. U.S. v. Lockheed Petroleum Services, 709 F.2d 1472, 1475 (Fed. Cir. 1983).

The Office, where it has the power to do so, should not relax the requirements of established practice in order to save an applicant from the consequence of his delay. See, Ex Parte Sassin, 1906 Dec. Comm'r. Pat. 205, 206 (Comm'r Pat. 1906) and compare Ziegler v. Baxter v. Natta, 159 USPQ 378, 379 (Comm'r Pat. 1968) and Williams v. The Five Platters, Inc., 510 F.2d 963, 184 USPQ 744 (CCPA 1975).

This application is being forwarded to Technology Center AU 3727 to further consider the petitions filed January 9, 2003, and October 17, 2002.

Telephone inquiries relevant to this decision should be directed to the undersigned at (703) 305-1820.

Brian Hearn

Brian Hearn
Senior Petitions Examiner
Office of Petitions
Office of the Deputy Commissioner
for Patent Examination Policy

UNITED STATES PATENT AND TRADEMARK OFFICE

UNDER SECRETARY OF COMMERCE FOR INTELLECTUAL PROPERTY AND
DIRECTOR OF THE UNITED STATES PATENT AND TRADEMARK OFFICE
WASHINGTON, D.C. 20231
www.uspto.gov

MAY - 1 2003

Paper No. 24

In re Application of	:	
Luis J. Rodriguez	:	DECISION ON PETITION
Application No. 09/978,215	:	
Filed: October 15, 2001	:	
For: Self Sealing Letter Sheets		

This is a decision on the petition filed on October 17, 2002 by which petitioner requests entry of a model. The petition is treated under 37 CFR 1.181 and no fee is required.

The petition is dismissed.

The regulation governing the admission of models reads as follows:

37 CFR 1.91 Models or exhibits not generally admitted as part of application or patent.

(a) A model or exhibit will not be admitted as part of the record of an application unless it:

(1) Substantially conforms to the requirements of § 1.52 or § 1.84;

(2) Is specifically required by the Office; or

(3) Is filed with a petition under this section including:

(i) The fee set forth in § 1.17(h); and

(ii) An explanation of why entry of the model or exhibit in the file record is necessary to demonstrate patentability.

(b) Notwithstanding the provisions of paragraph (a) of this section, a model, working model, or other physical exhibit may be required by the Office if deemed necessary for any purpose in examination of the application.

MPEP § 608.03 states that "[M]odels or exhibits are generally not admitted as part of an application or patent unless the requirements of 37 CFR 1.91 are satisfied."

A review of the petition shows petitioner has not satisfied items (a)(1) and (a)(3). The models do not appear to substantially conform to the requirements of 37 CFR 1.52. Petitioner has not explained why the entry of the model or exhibit is necessary to demonstrate patentability. There is no evidence that the claimed invention and/or the devices described in the prior art references have not been understood by the examiner, and that they can be understood only by reference to a model or exhibit.

Petitioner may file a renewed petition, without additional fee, provided that the renewed petition is filed within two months of the date of this decision. See 37 CFR 1.181(f). It is noted that an appeal brief was timely filed on March 7, 2003, so that the application is ripe for consideration of the appeal brief by the Primary Examiner. The application is being returned to the Supervisory Patent Examiner in Art Unit 3727 for appropriate action.

PETITION DISMISSED.

E. Rollins-Cross, Director, Patent
Examining Groups 3710 and 3720

Luis J. Rodriguez
60 Fourth Street
South Orange, NJ 07079

UNITED STATES PATENT AND TRADEMARK OFFICE

UNDER SECRETARY OF COMMERCE FOR INTELLECTUAL PROPERTY AND
DIRECTOR OF THE UNITED STATES PATENT AND TRADEMARK OFFICE
WASHINGTON, D.C. 20231
www.uspto.gov

MAY -1 2003

Paper No. 25

In re Application of	:	
Luis J. Rodriguez	:	DECISION ON PETITION
Application No. 09/978,215	:	
Filed: October 15, 2001	:	
For: Self Sealing Letter Sheets		

This is a decision on the petition filed on January 9, 2003 by which petitioner requests variety of supervisory actions set forth on pages 11 and 12 of petition.

The petition is dismissed as being untimely.

A review of the petition, and of the record, shows that this petition also contains a petition for relief pursuant to 37 CFR 1.183 whereby waiver of the provisions of 37 CFR 1.181(f) that require the filing of a petition within two months of the action or notice from which relief is requested. It is further noted that in a decision dated April 2, 2003, that petition was dismissed. See paper No. 23.

Inasmuch as the timeliness provisions of 37 CFR 1.181(f) have not been waived, and inasmuch as petitioner recognizes that the instant petition was not timely filed, there is no basis for treating the petition on its merits.

Petitioner may file a renewed petition, without additional fee, provided that the renewed petition is filed within two months of the date of this decision. See 37 CFR 1.181(f). It is noted that an appeal brief was timely filed on March 7, 2003, so that the application is ripe for consideration of the appeal brief by the Primary Examiner. The application is being returned to the Supervisory Patent Examiner in Art Unit 3727 for appropriate action. Petitioner is advised that Primary Examiner Stephen P. Garbe has been promoted to a Quality Review position, and a examiner will be assigned to this application.

PETITION DISMISSED.

E. Rollins-Cross

E. Rollins-Cross, Director, Patent
Examining Groups 3710 and 3720

Luis J. Rodriguez
60 Fourth Street
South Orange, NJ 07079

UNITED STATES PATENT AND TRADEMARK OFFICE

UNDER SECRETARY OF COMMERCE FOR INTELLECTUAL PROPERTY AND
DIRECTOR OF THE UNITED STATES PATENT AND TRADEMARK OFFICE
WASHINGTON, D.C. 20231
www.uspto.gov

MAY 13 2003

Paper No. 27

In re Application of	:
Luis J. Rodriguez	: DECISION ON REQUEST
Application No. 09/978,215	: FOR RECONSIDERATION
Filed: October 15, 2001	:
For: Self Sealing Letter Sheets	

The paper filed by facsimile transmission on May 9, 2003 is being treated as a request for reconsideration of the Decision on Petition dated May 1, 2003 by which petitioner sought supervisory direction to enter a model in the record. The original petition filed on October 17, 2002 was dismissed. No fee is required for the request for reconsideration..

The request for reconsideration is denied.

As noted in the original Decision, MPEP § 608.03 states that "[M]odels or exhibits are generally not admitted as part of an application or patent unless the requirements of 37 CFR 1.91 are satisfied." Even assuming compliance with 37 CFR 1.91(a)(1) as argued in the request for reconsideration, petitioner has failed to demonstrate entitlement to admission of the model pursuant to 37 CFR 1.91. The model of petitioner's invention has not been shown by petitioner to be necessary to demonstrate patentability of the invention, because petitioner's argument that the examiner has not understood the invention is unsupported by anything more than petitioner's belief that the examiner has improperly rejected the claims of record. This belief does establish that the examiner does not understand the invention; examiners may understand an invention and nevertheless properly reject claims directed to the invention. A review of the record clearly demonstrates that the examiner has understood the application and the invention described therein. While the propriety of the examiner's action is a subject for appeal pursuant to 37 CFR 1.181(a)(1) and 37 CFR 1.191, and therefore, the undersigned lacks jurisdiction to comment on the propriety of the rejection, it is simply illogical to presume that the examiner fails to understand the invention merely because an examiner rejects claims to the invention.

As the requirement of 37 CFR 1.91(a)(3) has not been satisfied, and the alternative requirement of 37 CFR 1.91(a)(2) has not been satisfied because the model was not required by the Office, there is no basis for entry of the model.

The request for reconsideration has been granted to the extent of reviewing the original Decision, in light of the arguments presented in the request. However, the request for reconsideration is wholly unpersuasive of any reason for granting the requested relief.

REQUEST FOR RECONSIDERATION DENIED..

E. Rollins-Cross, Director, Patent
Examining Groups 3710 and 3720

Luis J. Rodriguez
60 Fourth Street
South Orange, NJ 07079

UNITED STATES PATENT AND TRADEMARK OFFICE

COMMISSIONER FOR PATENTS
P.O. BOX 1450
ALEXANDRIA, VA 22313-1450
www.uspto.gov

MAY 19 2003

Paper No. 29

In re Application of	:	
Luis J. Rodriguez	:	DECISION ON PETITION
Application No. 09/978,215	:	
Filed: October 15, 2001	:	
For: Self Sealing Letter Sheets		

This is a decision on the petition under 37 CFR 1.181(a)(3) filed by facsimile transmission on May 12, 2003. No fee is required for the petition.

The petition is dismissed as being untimely filed.

Petitioner is requesting by this petition a statement that petitioner is entitled to entry of amendment C filed on October 17, 2002 into the record, entry of that amendment, entry of amendment B filed on August 24, 2002, entry of Affidavit 4 and any other action thought by the Commissioner to be fair.

A review of the record shows that all actions complained of in this petition, and for which relief is requested, occurred not later than October 17, 2002, almost seven full months prior to the filing of the instant petition. 37 CFR 1.181(f) states:

> "The mere filing of a petition will not stay any period for reply that may be running against the application, nor act as a stay of other proceedings. Any petition under this part not filed within two months of the mailing date of the action or notice from which relief is requested may be dismissed as untimely, except as otherwise provided. This two-month period is not extendable."

The instant petition does not provide any compelling rationale for the consideration of the merits of this petition almost seven months (or even longer) subsequent to the actions complained above. Petitioner's comments regarding the inconsistencies that may exist in the appeal brief due to the non-entry of certain papers fail to take into consideration that the brief was filed on March 7, 2003, and petitioner had more than ample time within the constraints of 37 CFR 1.181(f) to have timely filed a petition and to have received a decision with respect to such relief prior to filing maximum deadline permitted by regulation for filing the appeal brief. The requested relief will not be granted.

This application is being forwarded to the examiner for treatment of the appeal brief filed on March 7, 2003.

PETITION DISMISSED.

E. Rollins-Cross, Director, Patent
Examining Groups 3710 and 3720

Luis J. Rodriguez
60 Fourth Street
South Orange, NJ 07079

UNITED STATES PATENT AND TRADEMARK OFFICE

COMMISSIONER FOR PATENTS
P.O. BOX 1450
ALEXANDRIA, VA 22313-1450
www.uspto.gov

MAY 23 2003

Paper No. 31

In re Application of	:	
Luis J. Rodriguez	:	DECISION ON PETITION
Application No. 09/978,215	:	
Filed: October 15, 2001	:	
For: Self Sealing Letter Sheets		

The paper filed by facsimile transmission on May 19, 2003 is being treated as a petition to correct the record.

The petition is granted.

The record shows that currently with an amendment after final action filed on October 17, 2002, petitioner concurrently filed a paper styled as a petition requesting admission of a model into the record. Paper No. 24 was a Decision treating that petition, and paper Nos 27 and 29 were Decisions in which paper Nos 26 and 28 were treated.

A review of the record shows, as pointed out by the instant petition, that the examiner's advisory action dated October 25, 2002 indicates that the examiner entered the model into the record. While it is questionable whether the examiner had jurisdiction to act on the petition, in the interests of not prejudicing the appeal in this application, the undersigned will ratify the entry of the model attached to paper No. 14 into the record. So much of any prior Decision on Petition authored by the undersigned in this application is corrected solely with respect to indicating that the model attached to paper No. 14 has in fact been entered into the application record. No other changes in the substance of any prior Decision on Petition authored by the undersigned is made hereby.

This application is being forwarded to the examiner for treatment of the appeal brief filed on March 7, 2003.

PETITION GRANTED.

E. Rollins-Cross, Director, Patent
Examining Groups 3710 and 3720

Luis J. Rodriguez
60 Fourth Street
South Orange, NJ 07079

UNITED STATES PATENT AND TRADEMARK OFFICE

COMMISSIONER FOR PATENTS
P.O. BOX 1450
ALEXANDRIA, VA 22313-1450
www.uspto.gov

JUN -2 2003

Paper No. 33

In re Application of
Luis J. Rodriguez
Application No. 09/978,215
Filed: October 15, 2001
For: Self Sealing Letter Sheets

: DECISION ON PETITION

This is a decision on the petition filed by facsimile transmission on May 26, 2003. The petition is being treated as a request to correct the record.

The petition is granted-in-part to the extent indicated below.

First, with respect to paper No. 29 dismissing the petition of May 12, 2003 for being untimely, petitioner is advised that the last paragraph of paper No. 25 (a decision on petition) establishes a two month period for filing a request for reconsideration. This is normal procedure with respect to a petition that has been dismissed; petitioner is accorded a period in which to bring to the deciding official's attention any facts bearing on the requested relief not previously brought forth in the petition, or to request clarification, correction, etc. The last paragraph of paper No. 25 does not establish that the petition filed on January 9, 2003 (paper No. 18) that was dismissed because it was not timely filed would somehow be rendered timely if petitioner requested reconsideration. The record clearly shows that the requested relief on January 9, 2003 was not requested in a timely manner, and that petitioner himself recognized this fact and petitioned under 37 CFR 1.183 to waive 37 CFR 1.181(f) so as to have the petition considered timely.

As to the matter of paper No. 13, filed on October 17, 2002, and endorsed as "Amendment C", the amendments therein were refused entry by the Primary Examiner. See paper No. 13, an advisory action dated October 25, 2002. This refusal extends not only to the amendments (that is, to changes in the specification and changes to the claims), but to such any and all exhibits and attachments that were **not** previously submitted in the record prior to the filing of paper No. 13. See paper No. 15, paragraph 6. Notwithstanding petitioner's attempt to distinguish between amendments (that is, "changes") and "arguments and supportive attachments", there is no basis for entering "attachments" into the record after final action because "attachments" are not "amendments." Amendments are not entered in part, see MPEP §§ 714.19 and 714.20. Moreover, amendments after final action are not entered as a matter of right, and applicant no longer has any right to unrestricted prosecution. See MPEP § 714.12 and 714.13. There is no greater right to enter new exhibits into the record than there is to enter new claims.

On the other hand, arguments discussing why the final rejection dated September 11, 2002 was in error with respect to the application of prior art **that apply to claims and to exhibits and attachments of record in the application prior to the final rejection** will be considered to be of record, and available for consideration on appeal. Arguments discussing why the amendments to the claims proposed in Paper No. 13 make those claims allowable are not relevant, whether applicant wishes to consider them as entered in the record or not, since those amended claims filed in paper No. 13 are not of record.

As to the reference to the non-entry of amendment B, that reference was meant to be limited to

non-entry of the substitute specification that was filed on August 23, 20002, concurrently with Amendment B. Amendment B was apparently entered by the examiner, but remains objected to for the introduction of new matter. See paper No. 12. Thus petitioner is correct; amendment B is entered of record. Again, the substitute specification filed concurrently therewith is not entered.

With respect to entry of the substitute specification, the refusal to enter the substitute specification occurred on September 11, 2002, in paper No. 12. Even taking the refusal dates as October 25, 2002 and October 29, 2002, the first request for relief therefrom was not earlier than by petition filed on January 9, 2003 (paper No. 14, filed on October 17, 2002, is confined to the issue of admission of a model and was "granted" by the examiner and ratified by the undersigned in paper No. 31; it is noted that, per paper No. 15, paragraph 6, "affidavit 4" was not entered by the examiner). January 9, 2003 is more than two months subsequent to October 29, 2002, and as noted, *supra*, petitioner himself recognized this and petitioned unsuccessfully to have 37 CFR 1.181(f) waived. See paper Nos. 18 and 23. No original petition to enter the substitute specification was timely filed, and the subsequent filing of a "renewed" petition does not cure that deficiency.

In summary, the record is clarified to indicate that amendment B (but not the concurrently filed substitute specification) is entered. The record is further clarified to indicate that arguments filed on October 17, 2002 that relate **to claims and to exhibits and attachments of record in the application prior to the final rejection** are certainly in the record. However, arguments that apply to the claims and specification as proposed to be amendment in amendment C are **not** entered in the record. The record is further clarified by noting that when a petition is dismissed, an invitation to file a renewed petition within two months of the decision dismissing the petition is not a license that subsequently converts the renewed petition into a timely original petition. The petition under 37 CFR 1.181 filed on January 9, 2003 was not timely filed, and a waiver of 37 CFR 1.181(f) has been refused by the Office of Petitions. No subsequently filed renewed petition can make an originally filed petition timely. No renewed petition presented any basis for excusing the untimely filing of an original petition.

The application is being forwarded to the examiner for action on the appeal brief. The examiner is required to make sure that all of the amendments set forth in amendments A and B have been properly physically entered into the application. The examiner is further required to review amendment C and to consider all arguments therein that relate to the claims and specification as amended prior to the final rejection.

PETITION GRANTED-IN-PART.

E. Rollins-Cross, Director, Patent
Examining Groups 3710 and 3720

Luis J. Rodriguez
60 Fourth Street
South Orange, NJ 07079

UNITED STATES PATENT AND TRADEMARK OFFICE

Commissioner for Patents
United States Patent and Trademark Office
P.O. Box 1450
Alexandria, VA 22313-1450
www.uspto.gov

Paper No. 7

Philip S. Johnson
Johnson & Johnson
One Johnson & Johnson Plaza
New Brunswick, NJ 08933-7003

COPY MAILED

DEC 2 2 2003

OFFICE OF PETITIONS

In re Application of
John Collier et al.
Application No. 09/978,218

Filed: October 15, 2001
Attorney Docket No. ETH-1474

ON PETITION

This is a decision on the petition under 37 CFR 1.137(b), filed December 15, 2003, to revive the above-identified application.

The petition is granted.

The above-identified application became abandoned for failure to reply in a timely manner to the Notice to File Missing Parts of Application (Notice) mailed November 16, 2001. The Notice set a period for reply of two (2) months. No extensions of time under the provisions of 37 CFR 1.136(a) were obtained. Accordingly, the above-identified application became abandoned on January 17, 2002.

The application file is being forwarded to the Office of Initial Patent Examination Division for further processing.

Telephone inquiries concerning this decision should be directed to Latrice Bond at (703) 308-6911.

Latrice Bond

Latrice Bond
Petitions Examiner
Office of Petitions
Office of the Deputy Commissioner
for Patent Examination Policy

UNITED STATES PATENT AND TRADEMARK OFFICE

Commissioner for Patents
United States Patent and Trademark Office
P.O. Box 1450
Alexandria, VA 22313-1450
www.uspto.gov

IMMUNEX CORPORATION
C/O AMGEN INC.
US PATENT OPERATIONS/PBT
DEPT. 4300, M/ S 27-4-A
ONE AMGEN CENTER DRIVE
THOUSAND OAKS CA 91320-1799

COPY MAILED

MAR 0 3 2005

OFFICE OF PETITIONS

In re Application of	:	
Pamela M. Holland et al	:	
Application No. 09/978,248	:	ON PETITION
Filed: October 16, 2001	:	
Attorney Docket No. 3033-A	:	

This is a decision on the petition under 37 CFR 1.137(b), filed January 12, 2005, to revive the above-identified application.

The petition is **GRANTED**.

The above-identified application became abandoned for failure to submit the issue fee and the publication fee in a timely manner in reply to the Notice of Allowance mailed July 14, 2004, which set a statutory period for reply of three (3) months. Accordingly, the above-identified application became abandoned on October 15, 2004.

Telephone inquiries concerning this decision should be directed to the undersigned at (571) 272-3208.

This matter is being referred to Patent Publication

Karen Creasy

Karen Creasy
Petitions Examiner
Office of Petitions
Office of the Deputy Commissioner
for Patent Examination Policy

UNITED STATES PATENT AND TRADEMARK OFFICE

Commissioner for Patents
United States Patent and Trademark Office
P.O. Box 1450
Alexandria, VA 22313-1450
www.uspto.gov

STEVEN B. POKOTILOW, ESQ.
STROOCK & STROOCK & LAVAN LLP
180 MAIDEN LANE
NEW YORK, NY 10038

COPY MAILED

MAR 16 2007

OFFICE OF PETITIONS

In re Application of	:
David Y. Zhang	:
Application No. 09/978,261	: DECISION ON PETITION
Filed: October 15, 2001	: UNDER 37 CFR 1.78(a)(3)
Attorney Docket No. 251305.0028 SBP/MCD	:

This is a decision on the petition, treated under 37 CFR 1.78(a)(3), filed January 25, 2007, to accept an unintentionally delayed claim under 35 U.S.C. § 120 and 365(c) for the benefit of priority to the prior-filed nonprovisional and international applications set forth in the amendment filed with the petition.

The petition is **DISMISSED**.

A petition for acceptance of a claim for late priority under 37 CFR 1.78(a)(3) is only applicable to those applications filed on or after November 29, 2000. Further, the petition is appropriate only after the expiration of the period specified in 37 CFR 1.78(a)(2)(ii). In addition, the petition under 37 CFR 1.78(a)(3) must be accompanied by:

(1) the reference required by 35 U.S.C. § 120 and 37 CFR 1.78(a)(2)(i) and (iii) of the prior-filed application, unless previously submitted;
(2) the surcharge set forth in § 1.17(t); and
(3) a statement that the entire delay between the date the claim was due under 37 CFR 1.78(a)(2)(ii) and the date the claim was filed was unintentional. The Director may require additional information where there is a question whether the delay was unintentional.

The petition does not comply with item (1)

37 CFR 1.78(a)(2)(i) requires that any nonprovisional application claiming the benefit of one or more prior-filed copending nonprovisional applications must contain or be amended to contain a reference to each such prior-filed application, identifying it by application number (consisting of the series code and serial number) and indicating the relationship of the applications. The

relationship between the applications is whether the subject application is a continuation, divisional, or continuation-in-part of a prior-filed nonprovisional application. An example of a proper benefit claim is: "This application is a continuation of Application No. 10/---, filed. *See* MPEP Section 201.11, Reference to Prior Nonprovisional Applications. The amendment fails to comply with the provisions of 37 CFR 1.78(a)(2)(i) and is therefore unacceptable. In this regard, the amendment improperly states that Application No. 08/596,331 is "the United States national stage application corresponding to PCT International Application PCT/US95/07671." Accordingly, if petitioner desires to claim priority to this PCT application, the proper relationship from the application claiming benefit of priority to the PCT application must be provided.

Before the petition under 37 CFR § 1.78(a)(3) can be granted, a renewed petition under 37 CFR § 1.78(a)(3), along with an Application Data Sheet or an amendment (complying with 37 CFR 1.121 and/or 37 CFR 1.76(b)(5)), correcting the relationship problem with the PCT application is required.

Further correspondence with respect to this matter should be addressed as follows:

By mail: Mail Stop PETITIONS
Commissioner for Patents
Post Office Box 1450
Alexandria, VA 22313-1450

By hand: Customer Service Window
Mail Stop Petitions
Randolph Building
401 Dulany Street
Alexandria, VA 22314

By fax: (571) 273-8300
ATTN: Office of Petitions

Any questions concerning this matter may be directed to the undersigned at (571) 272-3218.

Frances Hicks
Petitions Examiner
Office of Petitions

UNITED STATES PATENT AND TRADEMARK OFFICE

COMMISSIONER FOR PATENTS
UNITED STATES PATENT AND TRADEMARK OFFICE
P.O. BOX 1450
ALEXANDRIA, VA 22313-1450
www.uspto.gov

STEVEN B. POKOTILOW, ESQ.
STROOCK & STROOCK & LAVAN LLP
180 MAIDEN LANE
NEW YORK, NY 10038

COPY MAILED

JUL 17 2007

OFFICE OF PETITIONS

In re Application of	:	
David Y. Zhang	:	
Application No. 09/978,261	:	DECISION ON PETITION
Filed: October 15, 2001	:	UNDER 37 CFR 1.78(a)(3)
Attorney Docket No. 251305.0028 SBP/MCD	:	

This is a decision on the renewed petition under 37 CFR 1.78(a)(3), filed April 23, 2007, to accept an unintentionally delayed claim under 35 U.S.C. §§ 120 and 365(c) for the benefit of priority to the prior-filed nonprovisional and international applications as set forth in the amendment filed January 25, 2007.

The petition is **GRANTED.**

A petition for acceptance of a claim for late priority under 37 CFR 1.78(a)(3) is only applicable to those applications filed on or after November 29, 2000. Further, the petition is appropriate only after the expiration of the period specified in 37 CFR 1.78(a)(2)(ii). In addition, the petition under 37 CFR 1.78(a)(3) must be accompanied by:

(1) the reference required by 35 U.S.C. § 120 and 37 CFR 1.78(a)(2)(i) and (iii) of the prior-filed application, unless previously submitted;
(2) the surcharge set forth in § 1.17(t); and
(3) a statement that the entire delay between the date the claim was due under 37 CFR 1.78(a)(2)(ii) and the date the claim was filed was unintentional. The Director may require additional information where there is a question whether the delay was unintentional.

All of the above requirements having been satisfied, the late claim for benefit of priority under 35 U.S.C. §§ 120 and 365(c) is accepted as being unintentionally delayed.

The decision on petition mailed March 16, 2007 was incorrect in that it stated that "the amendment improperly states that Application No. 08/596,331 is 'the United States national stage application corresponding to PCT International Application PCT/US95/07671,'" when, in fact, Office records indicate that Application No. 08/596,331 is the National Stage entry of PCT/US95/07671. Accordingly, the amendment to the specification filed on January 25, 2007 for benefit of priority to the prior-filed applications noted therein is proper and is accepted. However, as the amendment filed

with the renewed petition is now incorrect in indicating that it is a continuation-in-part of the aforementioned PCT application, this amendment is improper and is not accepted. The Office sincerely apologizes for the inconvenience this matter may have caused petitioner.

The granting of the petition to accept the delayed benefit claim to the prior-filed applications under 37 CFR 1.78(a)(3) should not be construed as meaning that this application is entitled to the benefit of the prior-filed applications. In order for this application to be entitled to the benefit of the prior-filed applications, all other requirements under 35 U.S.C. §§ 120 and 365(c) and 37 CFR 1.78(a)(1) and (a)(2) must be met. Similarly, the fact that the corrected Filing Receipt accompanying this decision on petition includes the prior-filed applications should not be construed as meaning that applicant is entitled to the claim for benefit of priority to the prior-filed applications noted thereon.

Further, petitioner is advised that, where an application claims a benefit under 35 U.S.C. 120 of a chain of applications, the application must make a reference to the first (earliest) application and every intermediate application. See Sampson v. Ampex Corp., 463 F.2d 1042, 1044-45, 174 USPQ 417, 418-19 (2d Cir. 1972); Sticker Indus. Supply Corp. v. Blaw-Knox Co., 405 F.2d 90, 93, 160 USPQ 177, 179 (7th Cir. 1968); Hovlid v. Asari, 305 F.2d 747, 751, 134 USPQ 162, 165 (9th Cir. 1962). See also MPEP § 201.11. In addition, every intermediate application must also make a reference to the first (earliest) application and every application after the first application and before such intermediate application. MPEP Section 201.06(d). Petitioner should review the claim submitted to ensure that a reference is made to the first application and to every intermediate application.

Accordingly, the examiner will, in due course, consider this benefit claim and determine whether this application is entitled to the benefit of the earlier filing date.

A corrected Filing Receipt, which includes the priority claim to the prior-filed applications, accompanies this decision on petition.

Any inquiries concerning this decision may be directed to the undersigned at (571) 272-3218. All other inquiries concerning either the examination procedures or status of the application should be directed to the Technology Center.

This application is being referred to the examiner of Technology Center Art Unit 1634 for consideration of applicant's entitlement to claim benefit of priority under 35 U.S.C. §§ 120 and 365(c) to the prior-filed applications noted in the amendment filed January 25, 2007.

Frances Hicks

Frances Hicks
Petitions Examiner
Office of Petitions

ATTACHMENT: Corrected Filing Receipt

UNITED STATES PATENT AND TRADEMARK OFFICE

UNITED STATES DEPARTMENT OF COMMERCE
United States Patent and Trademark Office
Address: COMMISSIONER FOR PATENTS
P.O. Box 1450
Alexandria, Virginia 22313-1450
www.uspto.gov

APPL NO.	FILING OR 371(c) DATE	ART UNIT	FIL FEE REC'D	ATTY.DOCKET NO	TOT CLMS	IND CLMS
09/978,261	10/15/2001	1634	1716	251305.0028 SBP/MCD	39	9

CONFIRMATION NO. 4119

CORRECTED FILING RECEIPT

OC000000024838688

Steven B. Pokotilow, Esq.
Stroock & Stroock & Lavan LLP
180 Maiden Lane
New York, NY 10038

Date Mailed: 07/16/2007

Receipt is acknowledged of this nonprovisional patent application. The application will be taken up for examination in due course. Applicant will be notified as to the results of the examination. Any correspondence concerning the application must include the following identification information: the U.S. APPLICATION NUMBER, FILING DATE, NAME OF APPLICANT, and TITLE OF INVENTION. Fees transmitted by check or draft are subject to collection. Please verify the accuracy of the data presented on this receipt. **If an error is noted on this Filing Receipt, please write to the Office of Initial Patent Examination's Filing Receipt Corrections. Please provide a copy of this Filing Receipt with the changes noted thereon. If you received a "Notice to File Missing Parts" for this application, please submit any corrections to this Filing Receipt with your reply to the Notice. When the USPTO processes the reply to the Notice, the USPTO will generate another Filing Receipt incorporating the requested corrections (if appropriate).**

Applicant(s)

David Y. Zhang, Jamaica, NY;

Power of Attorney:

Lawrence Rosenthal--24377
Steven Pokotilow--26405
David Schaeffer--32716
Matthew Siegal--32941
James DeCarlo--36120

Domestic Priority data as claimed by applicant

This application is a CIP of 09/728,265 12/01/2000 PAT 6,593,086
which is a CIP of 09/299,217 04/23/1999 PAT 6,569,647
which is a CON of 08/690,494 07/31/1996 PAT 5,942,391
which is a CIP of 08/596,331 05/20/1996 ABN
which is a 371 of PCT/US95/07671 06/14/1995
which is a CIP of 08/263,937 06/22/1994 ABN

Foreign Applications

If Required, Foreign Filing License Granted: 11/14/2001

The country code and number of your priority application, to be used for filing abroad under the Paris Convention, is US09/978,261

Projected Publication Date: Not Applicable

Non-Publication Request: No

Early Publication Request: No

Title

Nucleic acid amplification methods

Preliminary Class

435

PROTECTING YOUR INVENTION OUTSIDE THE UNITED STATES

Since the rights granted by a U.S. patent extend only throughout the territory of the United States and have no effect in a foreign country, an inventor who wishes patent protection in another country must apply for a patent in a specific country or in regional patent offices. Applicants may wish to consider the filing of an international application under the Patent Cooperation Treaty (PCT). An international (PCT) application generally has the same effect as a regular national patent application in each PCT-member country. The PCT process **simplifies** the filing of patent applications on the same invention in member countries, but **does not result** in a grant of "an international patent" and does not eliminate the need of applicants to file additional documents and fees in countries where patent protection is desired.

Almost every country has its own patent law, and a person desiring a patent in a particular country must make an application for patent in that country in accordance with its particular laws. Since the laws of many countries differ in various respects from the patent law of the United States, applicants are advised to seek guidance from specific foreign countries to ensure that patent rights are not lost prematurely.

Applicants also are advised that in the case of inventions made in the United States, the Director of the USPTO must issue a license before applicants can apply for a patent in a foreign country. The filing of a U.S. patent application serves as a request for a foreign filing license. The application's filing receipt contains further information and guidance as to the status of applicant's license for foreign filing.

Applicants may wish to consult the USPTO booklet, "General Information Concerning Patents" (specifically, the section entitled "Treaties and Foreign Patents") for more information on timeframes and deadlines for filing foreign patent applications. The guide is available either by contacting the USPTO Contact Center at 800-786-9199, or it can be viewed on the USPTO website at http://www.uspto.gov/web/offices/pac/doc/general/index.html.

For information on preventing theft of your intellectual property (patents, trademarks and copyrights), you may wish to consult the U.S. Government website, http://www.stopfakes.gov. Part of a Department of Commerce initiative, this website includes self-help "toolkits" giving innovators guidance on how to protect intellectual property in specific countries such as China, Korea and Mexico. For questions regarding patent enforcement issues, applicants may call the U.S. Government hotline at 1-866-999-HALT (1-866-999-4158).

LICENSE FOR FOREIGN FILING UNDER
Title 35, United States Code, Section 184
Title 37, Code of Federal Regulations, 5.11 & 5.15

GRANTED

The applicant has been granted a license under 35 U.S.C. 184, if the phrase "IF REQUIRED, FOREIGN FILING

LICENSE GRANTED" followed by a date appears on this form. Such licenses are issued in all applications where the conditions for issuance of a license have been met, regardless of whether or not a license may be required as set forth in 37 CFR 5.15. The scope and limitations of this license are set forth in 37 CFR 5.15(a) unless an earlier license has been issued under 37 CFR 5.15(b). The license is subject to revocation upon written notification. The date indicated is the effective date of the license, unless an earlier license of similar scope has been granted under 37 CFR 5.13 or 5.14.

This license is to be retained by the licensee and may be used at any time on or after the effective date thereof unless it is revoked. This license is automatically transferred to any related applications(s) filed under 37 CFR 1.53(d). This license is not retroactive.

The grant of a license does not in any way lessen the responsibility of a licensee for the security of the subject matter as imposed by any Government contract or the provisions of existing laws relating to espionage and the national security or the export of technical data. Licensees should apprise themselves of current regulations especially with respect to certain countries, of other agencies, particularly the Office of Defense Trade Controls, Department of State (with respect to Arms, Munitions and Implements of War (22 CFR 121-128)); the Bureau of Industry and Security, Department of Commerce (15 CFR parts 730-774); the Office of Foreign Assets Control, Department of Treasury (31 CFR Parts 500+) and the Department of Energy.

NOT GRANTED

No license under 35 U.S.C. 184 has been granted at this time, if the phrase "IF REQUIRED, FOREIGN FILING LICENSE GRANTED" DOES NOT appear on this form. Applicant may still petition for a license under 37 CFR 5.12, if a license is desired before the expiration of 6 months from the filing date of the application. If 6 months has lapsed from the filing date of this application and the licensee has not received any indication of a secrecy order under 35 U.S.C. 181, the licensee may foreign file the application pursuant to 37 CFR 5.15(b).

OIPE JC26
JAN 2 1 2003
PATENT & TRADEMARK OFFICE

#5 DAC/#

IN THE UNITED STATES PATENT AND TRADEMARK OFFICE

APPLICANT: E. Dziedzic SERIAL NO: 09/978,266 FILED: Oct. 15, 2001 FOR: Torque Measurement of Hydraulic Installer of Earth Anchor	GAU: EXAMINER: St. Louis, Missouri Date: January 13, 2003 DN: 7181

I hereby certify that this correspondence is being deposited with the U.S. Postal Service as first class mail in an envelope addressed to: Assistant Commissioner for Patents, Washington, D.C. 20231, on 1-14-03

Attorney

1-14-03

Date of Signature

Hon. Commissioner for Patents and Trademarks
Washington, DC 20231

PETITION TO REVIVE

Sir:

Enclosed is a Petition to Revive an unintentionally delayed abandonment of a patent application, as cited above. The applicant was late in filing of a Declaration in this application. Thus, on September 26, 2002, applicant filed a signed Declaration in this application. Applicant also submitted a check for $65.00, covering the balance due for that filing.

Applicant stated that any additional extension fees that are due should be debited against the Deposit Account # 040731. These can be seen upon the attached copy of the submission document.

In addition, the circumstances under which the Declaration was filed, late, was due to an unintentional delay. Thus, this Petition to Revive, due to the entire delay being unintentional, is being filed under 37 C.F.R. 1.137 (b).

While the Declaration has been previously filed herein, a copy of the same is enclosed again.

01/22/2003 CNGUYEN 00000062 09978266
01 FC:2453 650.00 OP

RECEIVED
JAN 2 3 2003
OFFICE OF PETITIONS

It is not known if a Terminal Disclaimer is required under C.F.R. 1.137 (d), and perhaps the examiner can advise as to whether a Terminal Disclaimer is required, during the prosecution of this application.

Enclosed is a Petition fee in the amount of $650.00, to cover the cost for this Petition to Revive an unintentionally abandoned patent application.

Respectfully submitted,

Paul M. Denk
Attorney for Applicant;
Pat. Off. Reg. No. 22,598
763 South New Ballas Road
St. Louis, Missouri 63141
(314) 872-8136

PMD/sm

UNITED STATES PATENT AND TRADEMARK OFFICE

COMMISSIONER FOR PATENTS
UNITED STATES PATENT AND TRADEMARK OFFICE
WASHINGTON, D.C. 20231
www.uspto.gov

Paper No. 7

PAUL M. DENK
763 SOUTH NEW BALLAS RD.
ST. LOUIS, MO 63141

COPY MAILED

MAR 1 4 2003

OFFICE OF PETITIONS

In re Application of
Edward Dziedzic
Application No. 09/978,266
Filed: October 15, 2001
Attorney Docket No. 7181

ON PETITION

This is a decision on the petition under 37 CFR 1.137(b), filed January 21, 2003, to revive the above-identified application.

The petition is **GRANTED**.

The above-identified application became abandoned for failure to reply in a timely manner to the Notice to File Missing Parts of Nonprovisional Application mailed November 14, 2001. The Notice set a period for reply of two (2) months from the mail date of the Notice. No extensions of time under the provisions of 37 CFR 1.136(a) were obtained. Accordingly, the above-identified application became abandoned on January 15, 2002.

37 CFR 1.137(b)(3) requires a statement that the entire delay in filing the required reply from the due date for the reply until the filing of a grantable petition pursuant to 37 CFR 1.137(b) was unintentional. If the statement contained in the instant petition varies from the language required by 37 CFR 1.137(b)(3), it will be interpreted as the required statement. Petitioner must notify the Office if this is **not** a correct interpretation of the statement contained in the instant petition.

Telephone inquiries concerning this decision should be directed to the undersigned at (703) 306-5594.

The application file is being forwarded to the Office of Initial Patent Examination for further processing.

Retta Williams

Retta Williams
Petitions Examiner
Office of Petitions
Office of the Deputy Commissioner
for Patent Examination Policy

UNITED STATES PATENT AND TRADEMARK OFFICE

Commissioner for Patents
United States Patent and Trademark Office
P.O. Box 1450
Alexandria, VA 22313-1450
www.uspto.gov

ANTHONY GIACCIO, ESQ.
KENYON & KENYON
ONE BROADWAY
NEW YORK NY 10004

COPY MAILED

FEB 15 2007

OFFICE OF PETITIONS

In re Application of	:	
Thomas et al	:	
Application No. 09/978,273	:	ON PETITION
Filed: October 15, 2001	:	
Attorney Docket No. 13101/48801	:	

This is a decision on the petition, filed February 14, 2007, under 37 CFR 1.313(c)(2) to withdraw the above-identified application from issue after payment of the issue fee.

The petition is **GRANTED.**

The above-identified application is withdrawn from issue for consideration of a submission under 37 CFR 1.114 (request for continued examination). See 37 CFR 1.313(c)(2).

Petitioner is advised that the issue fee paid on December 18, 2006 in the above-identified application cannot be refunded. If, however, the above-identified application is again allowed, petitioner may request that it be applied towards the issue fee required by the new Notice of Allowance.[1]

Telephone inquiries should be directed to the undersigned at (571) 272-3208.

The examiner of Technology Center AU 1638 will consider the request for continued examination under 37 CFR 1.114.

Karen Creasy
Petitions Examiner
Office of Petitions

---

[1] The request to apply the issue fee to the new Notice may be satisfied by completing and returning the new Issue Fee Transmittal Form PTOL-85(b), which includes the following language thereon: "Commissioner for Patents is requested to apply the Issue Fee and Publication Fee (if any) or re-apply any previously paid issue fee to the application identified above." Petitioner is advised that, whether a fee is indicated as being due or not, the Issue Fee Transmittal Form **must** be completed and timely submitted to avoid abandonment. Note the language in bold text on the first page of the Notice of Allowance and Fee(s) Due (PTOL-85).

Under the Paperwork Reduction Act of 1995, no persons are required to respond to a collection of information unless it displays valid OMB control number.

PETITION TO ACCEPT UNINTENTIONALLY DELAYED PAYMENT OF MAINTENANCE FEE IN AN EXPIRED PATENT (37 CFR 1.378(c))

Patent Number	Issue Date (YYYY-MM-DD)	Application Number	Filing Date (YYYY-MM-DD)	Docket Number (if applicable)
6,794,438	2004-09-21	09/978,302	2001-10-17	

CAUTION: Maintenance fee (and surcharge, if any) payment must correctly identify: (1) the patent number and (2) the application number of the actual U.S. application leading to issuance of that patent to ensure the fee(s) is/are associated with the correct patent. 37 CFR 1.366(c) and (d).

SMALL ENTITY
☒ Patentee claims, or has previously claimed, small entity status. See 37 CFR 1.27.

LOSS OF ENTITLEMENT TO SMALL ENTITY STATUS
☐ Patentee is no longer entitled to small entity status. See 37 CFR 1.27(g)

NOT Small Entity		Small Entity	
Fee	Code	Fee	Code
○ 3 ½ year	(1551)	◉ 3 ½ year	(2551)
○ 7 ½ year	(1552)	○ 7 ½ year	(2552)
○ 11 ½ year	(1553)	○ 11 ½ year	(2553)

SURCHARGE
The surcharge required by 37 CFR 1.20(i)(2) (Fee Code 1558) must be paid as a condition of accepting unintentionally delayed payment of the maintenance fee.

MAINTENANCE FEE (37 CFR 1.20(e)-(g))
The appropriate maintenance fee must be submitted with this petition.

STATEMENT
THE UNDERSIGNED CERTIFIES THAT THE DELAY IN PAYMENT OF THE MAINTENANCE FEE TO THIS PATENT WAS UNINTENTIONAL

PETITIONER(S) REQUEST THAT THE DELAYED PAYMENT OF THE MAINTENANCE FEE BE ACCEPTED AND THE PATENT REINSTATED

THIS PORTION MUST BE COMPLETED BY THE SIGNATORY OR SIGNATORIES

37 CFR 1.378(d) states: "Any petition under this section must be signed by an attorney or agent registered to practice before the Patent and Trademark Office, or by the patentee, the assignee, or other party in interest."

I certify, in accordance with 37 CFR 1.4(d)(4) that I am

◉ An attorney or agent registered to practice before the Patent and Trademark Office

○ A sole patentee

○ A joint patentee; I certify that I am authorized to sign this submission on behalf of all the other patentees.

○ A joint patentee; all of whom are signing this e-petition

○ The assignee of record of the entire interest

Patent Practitioner			
A signature of the applicant or representative is required in accordance with 37 CFR 1.33 and 10.18. Please see 37 CFR 1.4(d) for the form of the signature			
Signature	/Dennis Clarke/	Date (YYYY-MM-DD)	2008-11-10
Name	DENNIS CLARKE	Registration Number	22549

This collection of information is required by 37 CFR 1.378(c). The information is required to obtain or retain a benefit by the public which is to file (and by the USPTO to process) an application. Confidentiality is governed by 35 U.S.C. 122 and 37 CFR 1.11 and 1.14. This collection is estimated to take 1 hour to complete, including gathering, preparing, and submitting the completed application form to the USPTO. Time will vary depending upon the individual case. Any comments on the amount of time you require to complete this form and/ or suggestions for reducing this burden, should be sent to the Chief Information Officer, U.S. Patent and Trademark Office, U.S. Department of Commerce, P.O. Box 1450, Alexandria, VA 22313-1450. DO NOT SEND FEES OR COMPLETED FORMS TO THIS ADDRESS. **This form can only be used when in conjunction with EFS-Web. If this form is mailed to the USPTO, it may cause delays in reinstating the patent.**

Privacy Act Statement

The Privacy Act of 1974 (P.L. 93-579) requires that you be given certain information in connection with your submission of the attached form related to a patent application or patent. Accordingly, pursuant to the requirements of the Act, please be advised that: (1) the general authority for the collection of this information is 35 U.S.C. 2(b)(2); (2) furnishing of the information solicited is voluntary; and (3) the principal purpose for which the information is used by the U.S. Patent and Trademark Office is to process and/or examine your submission related to a patent application or patent. If you do not furnish the requested information, the U.S. Patent and Trademark Office may not be able to process and/or examine your submission, which may result in termination of proceedings or abandonment of the application or expiration of the patent.

The information provided by you in this form will be subject to the following routine uses:

1. The information on this form will be treated confidentially to the extent allowed under the Freedom of Information Act (5 U.S.C. 552) and the Privacy Act (5 U.S.C. 552a). Records from this system of records may be disclosed to the Department of Justice to determine whether the Freedom of Information Act requires disclosure of these record s.

2. A record from this system of records may be disclosed, as a routine use, in the course of presenting evidence to a court, magistrate, or administrative tribunal, including disclosures to opposing counsel in the course of settlement negotiations.

3. A record in this system of records may be disclosed, as a routine use, to a Member of Congress submitting a request involving an individual, to whom the record pertains, when the individual has requested assistance from the Member with respect to the subject matter of the record.

4. A record in this system of records may be disclosed, as a routine use, to a contractor of the Agency having need for the information in order to perform a contract. Recipients of information shall be required to comply with the requirements of the Privacy Act of 1974, as amended, pursuant to 5 U.S.C. 552a(m).

5. A record related to an International Application filed under the Patent Cooperation Treaty in this system of records may be disclosed, as a routine use, to the International Bureau of the World Intellectual Property Organization, pursuant to the Patent Cooperation Treaty.

6. A record in this system of records may be disclosed, as a routine use, to another federal agency for purposes of National Security review (35 U.S.C. 181) and for review pursuant to the Atomic Energy Act (42 U.S.C. 218(c)).

7. A record from this system of records may be disclosed, as a routine use, to the Administrator, General Services, or his/her designee, during an inspection of records conducted by GSA as part of that agency's responsibility to recommend improvements in records management practices and programs, under authority of 44 U.S.C. 2904 and 2906. Such disclosure shall be made in accordance with the GSA regulations governing inspection of records for this purpose, and any other relevant (i.e., GSA or Commerce) directive. Such disclosure shall not be used to make determinations about individuals.

8. A record from this system of records may be disclosed, as a routine use, to the public after either publication of the application pursuant to 35 U.S.C. 122(b) or issuance of a patent pursuant to 35 U.S.C. 151. Further, a record may be disclosed, subject to the limitations of 37 CFR 1.14, as a routine use, to the public if the record was filed in an application which became abandoned or in which the proceedings were terminated and which application is referenced by either a published application, an application open to public inspections or an issued patent.

9. A record from this system of records may be disclosed, as a routine use, to a Federal, State, or local law enforcement agency, if the USPTO becomes aware of a violation or potential violation of law or regulation.

UNITED STATES PATENT AND TRADEMARK OFFICE

Commissioner for Patents
United States Patent and Trademark Office
P.O. Box 1450
Alexandria, VA 22313-1450
www.uspto.gov

In re Patent No. 6794438
Issue Date: September 21,2004
Application No. 09978302
Filed: October 17,2001
Attorney Docket No. T2281-907509

:
:DECISION GRANTING PETITION
:UNDER 37 CFR 1.378(c)
:

This is a decision on the electronic petition, filed November 12,2008 ,under 37 CFR 1.378(c) to accept the unintentionally delayed payment of the 3.5 year maintenance fee for the above-identified patent.

The petition is **GRANTED**.

The maintenance fee is accepted, and the above-identified patent reinstated as of November 12,2008 . This decision also constitutes notice that the fee has been accepted. An electronic copy of the petition and this decision has been created as an entry in the Image File Wrapper. Nevertheless, petitioner should print and retain an independent copy.

Telephone inquiries related to this electronic decision should be directed to the Electronic Business Center at 1-866-217-9197.

UNITED STATES PATENT AND TRADEMARK OFFICE

Commissioner for Patents
United States Patent and Trademark Office
P.O. Box 1450
Alexandria, VA 22313-1450
www.uspto.gov

In re Patent No. 6841602
Issue Date: January 11,2005
Application No. 09978305
Filed: October 17,2001
Attorney Docket No. T2281-907508

:
:DECISION GRANTING PETITION
:UNDER 37 CFR 1.378(c)
:

This is a decision on the electronic petition, filed November 20,2008 ,under 37 CFR 1.378(c) to accept the unintentionally delayed payment of the 3.5 year maintenance fee for the above-identified patent.

The petition is **GRANTED**.

The maintenance fee is accepted, and the above-identified patent reinstated as of November 20,2008 . This decision also constitutes notice that the fee has been accepted. An electronic copy of the petition and this decision has been created as an entry in the Image File Wrapper. Nevertheless, petitioner should print and retain an independent copy.

Telephone inquiries related to this electronic decision should be directed to the Electronic Business Center at 1-866-217-9197.

Under the Paperwork Reduction Act of 1995, no persons are required to respond to a collection of information unless it displays valid OMB control number.

PETITION TO ACCEPT UNINTENTIONALLY DELAYED PAYMENT OF MAINTENANCE FEE IN AN EXPIRED PATENT (37 CFR 1.378(c))

Patent Number	Issue Date (YYYY-MM-DD)	Application Number	Filing Date (YYYY-MM-DD)	Docket Number (if applicable)
6,841,602	2005-01-11	09978305	2001-10-17	

CAUTION: Maintenance fee (and surcharge, if any) payment must correctly identify: (1) the patent number and (2) the application number of the actual U.S. application leading to issuance of that patent to ensure the fee(s) is/are associated with the correct patent. 37 CFR 1.366(c) and (d).

SMALL ENTITY
☒ Patentee claims, or has previously claimed, small entity status. See 37 CFR 1.27.

LOSS OF ENTITLEMENT TO SMALL ENTITY STATUS
☐ Patentee is no longer entitled to small entity status. See 37 CFR 1.27(g)

NOT Small Entity		Small Entity	
Fee	Code	Fee	Code
○ 3 ½ year	(1551)	◉ 3 ½ year	(2551)
○ 7 ½ year	(1552)	○ 7 ½ year	(2552)
○ 11 ½ year	(1553)	○ 11 ½ year	(2553)

SURCHARGE
The surcharge required by 37 CFR 1.20(i)(2) (Fee Code 1558) must be paid as a condition of accepting unintentionally delayed payment of the maintenance fee.

MAINTENANCE FEE (37 CFR 1.20(e)-(g))
The appropriate maintenance fee must be submitted with this petition.

STATEMENT
THE UNDERSIGNED CERTIFIES THAT THE DELAY IN PAYMENT OF THE MAINTENANCE FEE TO THIS PATENT WAS UNINTENTIONAL

PETITIONER(S) REQUEST THAT THE DELAYED PAYMENT OF THE MAINTENANCE FEE BE ACCEPTED AND THE PATENT REINSTATED

THIS PORTION MUST BE COMPLETED BY THE SIGNATORY OR SIGNATORIES

37 CFR 1.378(d) states: "Any petition under this section must be signed by an attorney or agent registered to practice before the Patent and Trademark Office, or by the patentee, the assignee, or other party in interest."

I certify, in accordance with 37 CFR 1.4(d)(4) that I am

◉ An attorney or agent registered to practice before the Patent and Trademark Office

○ A sole patentee

○ A joint patentee; I certify that I am authorized to sign this submission on behalf of all the other patentees.

○ A joint patentee; all of whom are signing this e-petition

○ The assignee of record of the entire interest

Patent Practitioner			
A signature of the applicant or representative is required in accordance with 37 CFR 1.33 and 10.18. Please see 37 CFR 1.4(d) for the form of the signature			
Signature	/Dennis Clarke/	Date (YYYY-MM-DD)	2008-11-20
Name	Dennis Clarke	Registration Number	22549

This collection of information is required by 37 CFR 1.378(c). The information is required to obtain or retain a benefit by the public which is to file (and by the USPTO to process) an application. Confidentiality is governed by 35 U.S.C. 122 and 37 CFR 1.11 and 1.14. This collection is estimated to take 1 hour to complete, including gathering, preparing, and submitting the completed application form to the USPTO. Time will vary depending upon the individual case. Any comments on the amount of time you require to complete this form and/ or suggestions for reducing this burden, should be sent to the Chief Information Officer, U.S. Patent and Trademark Office, U.S. Department of Commerce, P.O. Box 1450, Alexandria, VA 22313-1450. DO NOT SEND FEES OR COMPLETED FORMS TO THIS ADDRESS. **This form can only be used when in conjunction with EFS-Web. If this form is mailed to the USPTO, it may cause delays in reinstating the patent.**

Privacy Act Statement

The Privacy Act of 1974 (P.L. 93-579) requires that you be given certain information in connection with your submission of the attached form related to a patent application or patent. Accordingly, pursuant to the requirements of the Act, please be advised that: (1) the general authority for the collection of this information is 35 U.S.C. 2(b)(2); (2) furnishing of the information solicited is voluntary; and (3) the principal purpose for which the information is used by the U.S. Patent and Trademark Office is to process and/or examine your submission related to a patent application or patent. If you do not furnish the requested information, the U.S. Patent and Trademark Office may not be able to process and/or examine your submission, which may result in termination of proceedings or abandonment of the application or expiration of the patent.

The information provided by you in this form will be subject to the following routine uses:

1. The information on this form will be treated confidentially to the extent allowed under the Freedom of Information Act (5 U.S.C. 552) and the Privacy Act (5 U.S.C. 552a). Records from this system of records may be disclosed to the Department of Justice to determine whether the Freedom of Information Act requires disclosure of these record s.

2. A record from this system of records may be disclosed, as a routine use, in the course of presenting evidence to a court, magistrate, or administrative tribunal, including disclosures to opposing counsel in the course of settlement negotiations.

3. A record in this system of records may be disclosed, as a routine use, to a Member of Congress submitting a request involving an individual, to whom the record pertains, when the individual has requested assistance from the Member with respect to the subject matter of the record.

4. A record in this system of records may be disclosed, as a routine use, to a contractor of the Agency having need for the information in order to perform a contract. Recipients of information shall be required to comply with the requirements of the Privacy Act of 1974, as amended, pursuant to 5 U.S.C. 552a(m).

5. A record related to an International Application filed under the Patent Cooperation Treaty in this system of records may be disclosed, as a routine use, to the International Bureau of the World Intellectual Property Organization, pursuant to the Patent Cooperation Treaty.

6. A record in this system of records may be disclosed, as a routine use, to another federal agency for purposes of National Security review (35 U.S.C. 181) and for review pursuant to the Atomic Energy Act (42 U.S.C. 218(c)).

7. A record from this system of records may be disclosed, as a routine use, to the Administrator, General Services, or his/her designee, during an inspection of records conducted by GSA as part of that agency's responsibility to recommend improvements in records management practices and programs, under authority of 44 U.S.C. 2904 and 2906. Such disclosure shall be made in accordance with the GSA regulations governing inspection of records for this purpose, and any other relevant (i.e., GSA or Commerce) directive. Such disclosure shall not be used to make determinations about individuals.

8. A record from this system of records may be disclosed, as a routine use, to the public after either publication of the application pursuant to 35 U.S.C. 122(b) or issuance of a patent pursuant to 35 U.S.C. 151. Further, a record may be disclosed, subject to the limitations of 37 CFR 1.14, as a routine use, to the public if the record was filed in an application which became abandoned or in which the proceedings were terminated and which application is referenced by either a published application, an application open to public inspections or an issued patent.

9. A record from this system of records may be disclosed, as a routine use, to a Federal, State, or local law enforcement agency, if the USPTO becomes aware of a violation or potential violation of law or regulation.

UNITED STATES
PATENT AND
TRADEMARK OFFICE

UNDER SECRETARY OF COMMERCE FOR INTELLECTUAL PROPERTY AND
DIRECTOR OF THE UNITED STATES PATENT AND TRADEMARK OFFICE
WASHINGTON, D.C. 20231
WWW.USPTO.GOV

SEP 20 2002

#14

MARY ANN DILLAHUNTY
BURNS, DOANE, SWECKER & MATHIS, L.L.P.
P.O. BOX 1404
ALEXANDRIA, VIRGINIA 22313-1404

In re Application of	:
CRUZ et al	:
Serial No. 09/978,309	: Decision on Petition to Make Special
Filing Date: 15 October 2001	:
Attorney Docket No. 033352-010	:

This letter is in response to the Petition under 37 C.F.R. 1.102, MPEP 708.02, Item XII and MPEP 1002.02(c)(2), filed 14 August 2002.

A review of this file shows that the application was filed under 37 CFR 111(a) on 15 October 2001. A Notice to comply with the sequence requirements was mailed 11February 2002 and a raw sequence listing was processed by the Office and entered into the file on 16 April 2002. The application has been classified in Class 514, subclass 12, directed to Drugs, bio-affecting and body treating compositions, with a designated organic active ingredient containing 25 or more peptide repeating units in known peptide chain. The application has been assigned to Art Unit 1653 and the Examiner Samuel Liu. The file does not contain an Office action on the merits or a restriction requirement.

On 14 August 2002, Applicants petitioned to make this biotechnology application special. The petition includes a verified statement claiming small entity status and a declaration of Co-inventor Dr. Tony Cruz. The Declaration states that Dr. Cruz is the President and CEO of Transition Therapeutics, Inc, that he is a co-inventor of the patent application, that the subject of the application is major asset of Transition Therapeutics Inc and that Dr. Cruz believes that the development of the technology will be significantly impaired if examination of the application is delayed. The petition and Declaration meet the requirements of 37 CFR 1.102 and MPEP 708.02, Item XII.

The petition is **GRANTED** for the reasons set forth above.

The application is being sent back to the examiner for action consistent with this decision.

Should there be any questions with regard to this letter, please contact Special Program Examiner Julie Burke by letter addressed to the Director, Technology Center 1600, Washington DC 20231 or by telephone at (703) 308-7553 or by facsimile transmission at (703) 308-7230.

J Burke

Julie Burke
Special Program Examiner
TC1600

UNITED STATES PATENT AND TRADEMARK OFFICE

COMMISSIONER FOR PATENTS
UNITED STATES PATENT AND TRADEMARK OFFICE
P.O. BOX 1450
ALEXANDRIA, VA 22313-1450
www.uspto.gov

BARNES & THORNBURG
600 ONE SUMMIT SQUARE
FORT WAYNE, IN 46802

COPY MAILED
AUG 1 8 2004
OFFICE OF PETITIONS

In re Application of
James J. Xu
Application No. 09/978,326
Filed: October 16, 2001
Attorney Docket No. 19763/82069

DECISION GRANTING PETITION
UNDER 37 CFR 1.137(b)

This is a decision on the petition, filed August 3, 2004, which is being treated as a petition under 37 CFR 1.137(b) to revive the instant nonprovisional application for failure to timely notify the U.S. Patent and Trademark (USPTO) of the filing of an application in a foreign country, or under a multinational treaty that requires publication of applications eighteen months after filing. *See* 37 CFR 1.137(f).

The petition is **GRANTED**.

Petitioner states that the instant nonprovisional application is the subject of an application filed in an eighteen month publication country on October 16, 2002. However, the USPTO was unintentionally not notified of this filing within 45 days subsequent to the filing of the subject application in an eighteen month publication country.

In view of the above, this application became abandoned pursuant to 35 U.S.C. §122(b)(2)(B)(iii) and 37 CFR 1.213(c) for failure to timely notify the Office of the filing of an application in a foreign country or under a multilateral international agreement that requires publication of applications 18 months after filing.

A petition to revive an application abandoned pursuant to 35 U.S.C. § 122(b)(2)(B)(iii) for failure to notify the USPTO of a foreign filing must be accompanied by:

(1) the required reply which is met by the notification of such filing in a foreign country or under a multinational treaty;
(2) the petition fee as set forth in 37 CFR 1.17(m); and
(3) a statement that the entire delay in filing the required reply from the due date of the reply until the filing of a grantable petition was unintentional.

The instant petition has been found to be in compliance with 37 CFR 1.137(b). Accordingly, the failure to timely notify the USPTO of a foreign or international filing within 45 days after the date of filing of such foreign or international application as provided by 35 U.S.C. § 122(b)(2)(B)(iii) and 37 CFR 1.213(c) is accepted as having been unintentionally delayed.

The previous Request and Certification under 35 U.S.C. § 122(b)(2)(B)(i) has been rescinded. A Notice Regarding Rescission of Nonpublication Request which sets forth the projected publication date of November 25, 2004 accompanies this decision on petition.

The application file does not indicate a change of address has been filed in this case, although the address given on the petition differs from the address of record. A change of address should be filed in this case in accordance with MPEP 601.03. A courtesy copy of this decision is being mailed to the address noted on the petition. However, until otherwise instructed, all future correspondence regarding this application will be mailed solely to the address of record.

Any inquiries concerning this decision may be directed to Sherry D. Brinkley at (703) 305-9220.

The application is being returned to Technology Center Art Unit 1711 to await the Appeal Brief. Failure to reply will again result in the abandonment of the application.

Sherry D. Brinkley
Petitions Examiner
Office of Petitions
Office of the Deputy Commissioner
for Patent Examination Policy

ATTACHMENT: Notice Regarding Rescission of Nonpublication Request

CC: BRADFORD G. ADDISON
BARNES & THORNBURG
11 SOUTH MERIDAN STREET
INDIANPOLIS, IN 46204

UNITED STATES PATENT AND TRADEMARK OFFICE

COMMISSIONER FOR PATENTS
UNITED STATES PATENT AND TRADEMARK OFFICE
P.O. BOX 1450
ALEXANDRIA, VA 22313-1450
www.uspto.gov

BRINKS HOFER GILSON & LIONE
P.O. BOX 10395
CHICAGO, IL 60610

COPY MAILED

SEP 30 2005

OFFICE OF PETITIONS

In re Application of	:	
Dennis, et al.	:	DECISION ON APPLICATION
Application No. 09/978,344	:	FOR PATENT TERM
Filed: October 16, 2001	:	ADJUSTMENT
Atty. Dkt. No.: 11509/8	:	

This is a decision on the "REQUEST FOR RECONSIDERATION OF PATENT TERM ADJUSTMENT PURSUANT TO 37 C.F.R. § 1.705(b)" filed June 27, 2005.

The application for patent term adjustment ("PTA") under 37 C.F.R. § 1.705(b) is hereby **GRANTED TO THE EXTENT INDICATED HEREIN**.

Applicants request that the Determination of Patent Term Adjustment be corrected from zero days, as indicated on the Determination of Patent Term Adjustment mailed April 7, 2005, to an adjustment of 663 days.

The correct adjustment at the time of Notice of Allowance is 490 days. The Office will adjust the PAIR screen to reflect that the Patent Term Adjustment (PTA) determination at the time of mailing of the Notice of Allowance and Issue Fee Due reflects an adjustment of 490 days. A copy of the updated PAIR screen showing the correct determination is enclosed.

In accordance with 37 C.F.R. § 1.702(a)(1), an adjustment of 550 days can be attributed to the Office[1].

The Office errantly entered September 8, 2003 as the date a proper response to the Notice to File Missing Parts, mailed November 19, 2001, rather than February 12, 2002, the date a response was in fact submitted.

[1] In accordance with 37 C.F.R. § 1.703(a)(1), the adjustment began December 17, 2002, the day after the date that is fourteen months after the date on which the application was filed, and ended June 18, 2004, the date the restriction requirement was mailed.

Accordingly, the adjustment of 550 days is reduced 34 days in accordance with 37 C.F.R. § 1.704(c)(7)[2].

The adjustment of 550 days is further reduced two days in accordance with 37 C.F.R. 1.704(b)[3].

The adjustment of 550 days is further reduced 24 days in accordance with 37 C.F.R. § 1.704(c)(7)[4].

The instant application for patent term adjustment also requests reconsideration of the patent term adjustment as it relates to the Office's failure to issue the patent within 3 years of the filing date. A decision as to the period of adjustment under 37 C.F.R. § 1.704(b) is being **held in abeyance** until after the actual patent date. Knowledge of the actual date the patent issues is required to calculate the amount, if any, of additional patent term for Office failure to issue the patent within 3 years. *See*, 37 CFR 1.703(b).

Applicants are given **TWO (2) MONTHS** from the issue date of the patent to file a written request for reconsideration of the patent term adjustment for Office failure to issue the patent within three years. A copy of this decision should accompany the request. Applicants may seek such consideration without payment of an additional fee. However, as to all other bases for seeking reconsideration of the patent term adjustment indicated in the patent, all requirements of 37 CFR 1.705(d) must be met. Requests for reconsideration on other bases must be timely filed and must include payment of the required fee.

Applicants are reminded that if an application is entitled to an adjustment under 35 USC 154(b)(1)(B), the entire period during which the application was pending before the Office (except for periods excluded under 35 USC 154(b)(1)(B)(i)-(iii)), and not just the period beginning three years after the actual filing date of the application, is the period of delay under 35 USC

---

[2] On March 12, 2002, a Notice of Incomplete Reply was mailed March 12, 2002 requiring submission of an abstract. The period of time for reply remained as set forth in the Notice to File Missing Parts. Accordingly, the reduction under 37 CFR 1.704(c)(7) began February 13, 2002, the day after the date that the initial response to the Notice to File Missing Parts was submitted, and ended March 18, 2002, the date the paper correcting the omission was filed.

[3] The adjustment began January 6, 2005, the day after the date that is three months after the date that the non-final Office action was mailed, and ended January 7, 2005, the date a response was filed.

[4] The adjustment began January 8, 2005, the day after the date that the initial non-compliant amendment was filed, and ended January 31, 2005, the date the paper correction the omission was filed.

154(b)(1)(B) in determining whether periods of delay overlap under 35 USC 154(b)(2)(A).

Thus, any days of delay for Office issuance of the patent more than 3 years after the filing date of the application which overlap with the days of patent term adjustment accorded prior to the issuance of the patent will not result in any additional patent term adjustment. *See*, 35 USC 154(b)(1)(B), 35 USC 154(b)(2)(A), and 37 CFR § 1.703(f). *See, also, Revision of Patent Term Extension and Patent Term Adjustment Provisions; Final Rule*, 69 Fed. Reg. 21704 (April 22, 2004).

Accordingly, the period of patent term adjustment as of the date of mailing of the Notice of Allowance is 490 days.

The application file is being forwarded to the Publications Division for issuance of a patent.

Telephone inquiries specific to this matter should be directed to Petitions Attorney Alesia M. Brown at (703) 305-0310.

Kery Fries

Kery Fries
Senior Legal Advisor
Office of Patent Legal Administration
Office of Deputy Commissioner
for Patent Examination Policy

Enclosure: Copy of Adjustment PAIR Calculation

UNITED STATES PATENT AND TRADEMARK OFFICE

COMMISSIONER FOR PATENTS
UNITED STATES PATENT AND TRADEMARK OFFICE
P.O. BOX 1450
ALEXANDRIA, VA 22313-1450
www.uspto.gov

BRINKS HOFER GILSON & LIONE
P.O. BOX 10395
CHICAGO IL 60610

COPY MAILED

SEP 29 2006

OFFICE OF PETITIONS

In re Patent No. 6,977,171	:	
Issued: December 20, 2005	:	
Application No. 09/978,344	:	PATENT TERM ADJUSTMENT
Filed: October 16, 2001	:	
Dkt. No.: 11509/8	:	

This is a decision on the "REQUEST FOR RECONSIDERATION OF PRIOR REQUEST FOR RECONSIDERATION OF PATENT TERM ADJUSTMENT UNDER 37 C.F.R. § 1.705(d)," filed January 9, 2006.

The application for patent term adjustment under 37 CFR 1.705 is hereby **DISMISSED**.

The above-identified application matured into U.S. Patent No. 6,977,171 on December 20, 2005. The patent issued with a PTA of 415 days. The instant application for PTA was timely filed January 9, 2006. Patentees herein refer to the application for patent term adjustment previously filed June 27, 2005 and decided January 9, 2006. Patentees continue to argue that the patent is entitled to additional adjustment under 37 CFR 1.702(b).

Patentees herein do not dispute the adjustment of 415 days accorded the patent. Instead, patentees continue to argue that the patent is entitled to an additional adjustment under 37 CFR 1.702(b) and 1.703(b) for the Office's failure to issue the patent within three years from the date the application was filed.

There were no adjustments accorded under 37 CFR 1.702(b) and 1.703(b) for failure to issue the patent within three years of the application filing date. This is because if an application is entitled to an adjustment under 35 U.S.C. 154(b)(1)(B) (and 37 C.F.R. § 1.704(b)), the entire period during which the application was pending (except for periods excluded under 35 U.S.C. 154(b)(1)(B)(i)-(iii)), and not just the period beginning three years after the actual filing date of the application, is the period of delay under 35 U.S.C. 154(b)(1)(B) in determining whether periods of delay overlap under 35 U.S.C. 154(b)(2)(A).

Thus, any days of delay for Office issuance of the application that overlap with the days of patent term adjustment accorded prior to the issuance of the patent will not result in any additional patent term adjustment. *See*, 35 U.S.C. 154(b)(1)(B), 35 U.S.C. 154(b)(2)(A), and 37 CFR § 1.703(f). See also *Revision of Patent Term Extension and Patent Term Adjustment Provisions; Final Rule*, 69 Red. Reg. 21704 (April 22, 2004).

No additional fee is due in connection with this matter.

Telephone inquiries specific to this matter should be directed to Petitions Attorney Alesia M. Brown at (571) 272-3205.

Kery Fries

Kery Fries
Senior Legal Advisor
Office of Patent Legal Administration
Office of Deputy Commissioner
for Patent Examination Policy

UNITED STATES PATENT AND TRADEMARK OFFICE

Commissioner for Patents
United States Patent and Trademark Office
P.O. Box 1450
Alexandria, VA 22313-1450
www.uspto.gov

SALIWANCHIK LLOYD & SALIWANCHIK
A PROFESSIONAL ASSOCIATION
PO BOX 142950
GAINESVILLE FL 32614-2950

COPY MAILED

SEP 3 0 2005

OFFICE OF PETITIONS

In re Application of	:
Dumas Milne Edwards et al.	:
Application No. 09/978,360	: DECISION ON PETITION
Filed: October 15, 2001	:
Attorney Docket No. G-056US04CIP	:

This is a decision on the petition filed May 18, 2005, which is being treated as a petition under 37 CFR §§1.78(a)(3) and 1.78 (a)(6), , to accept an unintentionally delayed claim under 35 U.S.C. §§ 120 and 119(a)-(e) and 365(c) for the benefit of the prior-filed applications set forth in the concurrently filed amendment and supplemental application data sheet.

The petition is **Granted**.

A petition for acceptance of a claim for late priority under 37 CFR §§1.78(a)(3) and 1.78(a)(6) and is only applicable to those applications filed on or after November 29, 2000. Further, the petition is appropriate only after the expiration of the period specified in 37 CFR 1.78(a)(2)(ii). In addition, the petition under 37 CFR §§1.78(a)(3) and 1.78(a)(6) must be accompanied by:

(1) the reference required by 35 U.S.C. § 120 and 37 CFR 1.78(a)(2)(i) of the prior-filed application, unless previously submitted;
(2) the surcharge set forth in § 1.17(t); and
(3) a statement that the entire delay between the date the claim was due under 37 CFR 1.78(a)(2)(ii) and the date the claim was filed was unintentional. The Commissioner may require additional information where there is a question whether the delay was unintentional.

The instant nonprovisional application was filed after November 29, 2000, and the claim herein for the benefit of priority to the prior-filed applications is submitted after expiration of the period specified in 37 CFR§§ 1.78(a)(2)(ii) and 1.78(a)(5)(ii). *See* 35 U.S.C. §§120 and 365(c). Accordingly, having found that the instant petition for acceptance of an unintentionally delayed claim for the benefit of priority under 35 U.S.C. §§ 120 and 365(c) to the prior filed applications

satisfies the condition of 37 CFR §§1.78(a)(3) and 1.78(a)(6) is granted.

The instant nonprovisional application was pending at the time of filing of the reference to the prior-filed provisional applications as required by 37 CFR 1.78 (a)(5)(ii). Additionally the intermediate applications were filed within twelve months of the filing date of the prior-filed provisional applications, for which priority is claimed.

The petition complies with the requirements for a grantable petition under 37 CFR §§1.78(a)(3) and 1.78(a)(6) in that (1) a reference to the above-noted, prior-filed applications has been included in an amendment to the first sentence of the specification following the title, as provided by 37 CFR 1.78(a)(2)(iii); (2) the surcharge fee required by 37 CFR 1.17(t) has been submitted; and (3) the petition contains a proper statement of unintentional delay. Accordingly, having found that the instant petition for acceptance of an unintentionally delayed claim for the benefit of priority under 35 U.S.C. §§ 120 and 119(e) to the above-noted, prior-filed applications satisfies the conditions of 37 CFR §§1.78(a)(3) and 1.78(a)(6), the petition is granted.

The granting of the petition to accept the delayed benefit claim to the prior-filed applications under 37 CFR 1.78(a)(3) and (a)(6) should not be construed as meaning that the instant application is entitled to the benefit of the prior-filed applications. In order for the instant application to be entitled to the benefit of the prior-filed applications, all other requirements under 35 U.S.C. § 120 and 37 CFR 1.78(a)(1) and (a)(2) and under 35 U.S.C. §119(e) and 37 CFR 1.78(a)(4) and (a)(5) must be met. Similarly, the fact that the corrected Filing Receipt accompanying this decision on petition includes the prior-filed applications should not be construed as meaning that applicant is entitled to the claim for benefit of priority to the prior-filed applications noted thereon. Accordingly, the examiner will, in due course, consider this benefit claim and determine whether the instant application is entitled to the benefit of the earlier filing date.

This application is being forwarded to the examiner of Technology Center Art Unit 1646 for appropriate action on the amendment filed May 18, 2005 including consideration of applicant's entitlement to claim benefit of priority under 35 U.S.C. § 120 and 37 CFR 1.78(a)(2) for benefit of the prior- filed applications, and for consideration of the claim under 35 U.S.C. §§119(e) and 37 CFR 1.78(a)(5) for the benefit of the prior-filed provisional applications.

Any inquiries concerning this decision may be directed to Charlema R. Grant at (571) 272-3215.

Frances Hicks
Petitions Examiner
Office of Petition

Attachment: Corrected Filing Receipt

UNITED STATES PATENT AND TRADEMARK OFFICE

Commissioner for Patents
United States Patent and Trademark Office
P.O. Box 1450
Alexandria, VA 22313-1450
www.uspto.gov

NOV 16 2004

VIDAS, ARRETT & STEINKRAUS, P.A.
6109 BLUE CIRCLE DRIVE
SUITE 2000
MINNETONKA MN 55343-9185

In re Application of	:	
John E. Sherry	:	NOTICE OF WITHDRAWAL
Serial No.: 09/978,383	:	FROM ISSUE
Filed: October 16, 2001	:	UNDER 37 CFR 1.313(b)
For: Aortic Artery Aneurysm	:	
Endovascular Prosthesis	:	

The above-identified application is withdrawn from issue after payment of the issue fee due to unpatentability of one or more claims. See 37 CFR 1.313(b)(3).

The above-identified application is hereby withdrawn from issue.

The issue fee is refundable upon written request. If, however, the application is again found allowable, the issue fee can be applied toward payment of the issue fee in the amount identified on the new Notice of Allowance and Issue Fee Due upon written request. This request and any balance due must be received on or before the due date noted in the new Notice of Allowance in order to prevent abandonment of the application.

Telephone inquiries should be directed to John E. Kittle at (571)272-2975.

The above-identified application is being forwarded to the examiner for prompt appropriate action, including notifying applicant of the new status of this application.

John E. Kittle

John E. Kittle
Director
Technology Center 3700/2900

UNITED STATES PATENT AND TRADEMARK OFFICE

Commissioner for Patents
United States Patent and Trademark Office
P.O. Box 1450
Alexandria, VA 22313-1450
www.uspto.gov

In re Patent No. 6692500
Issue Date: February 17,2004
Application No. 09978449
Filed: October 15,2001
Attorney Docket No. 31111-PA

:
:DECISION GRANTING PETITION
:UNDER 37 CFR 1.378(c)
:

This is a decision on the electronic petition, filed February 16,2010 ,under 37 CFR 1.378(c) to accept the unintentionally delayed payment of the 3.5 year maintenance fee for the above-identified patent.

The petition is **GRANTED**.

The maintenance fee is accepted, and the above-identified patent reinstated as of February 16,2010 . This decision also constitutes notice that the fee has been accepted. An electronic copy of the petition and this decision has been created as an entry in the Image File Wrapper. Nevertheless, petitioner should print and retain an independent copy.

Telephone inquiries related to this electronic decision should be directed to the Electronic Business Center at 1-866-217-9197.

PTO/SB/66 (03-09)
Approved for use through 03/31/2012. OMB 0651-0016
U.S. Patent and Trademark Office: U.S. DEPARTMENT OF COMMERCE
Under the Paperwork Reduction Act of 1995, no persons are required to respond to a collection of information unless it displays valid OMB control number.

PETITION TO ACCEPT UNINTENTIONALLY DELAYED PAYMENT OF MAINTENANCE FEE IN AN EXPIRED PATENT (37 CFR 1.378(c))

Patent Number	Issue Date (YYYY-MM-DD)	Application Number	Filing Date (YYYY-MM-DD)	Docket Number (if applicable)
6692500	2004-02-17	09978449	2001-10-15	

CAUTION: Maintenance fee (and surcharge, if any) payment must correctly identify: (1) the patent number and (2) the application number of the actual U.S. application leading to issuance of that patent to ensure the fee(s) is/are associated with the correct patent. 37 CFR 1.366(c) and (d).

SMALL ENTITY
☒ Patentee claims, or has previously claimed, small entity status. See 37 CFR 1.27.

LOSS OF ENTITLEMENT TO SMALL ENTITY STATUS
☐ Patentee is no longer entitled to small entity status. See 37 CFR 1.27(g)

NOT Small Entity		Small Entity	
Fee	Code	Fee	Code
○ 3 ½ year	(1551)	◉ 3 ½ year	(2551)
○ 7 ½ year	(1552)	○ 7 ½ year	(2552)
○ 11 ½ year	(1553)	○ 11 ½ year	(2553)

SURCHARGE
The surcharge required by 37 CFR 1.20(i)(2) (Fee Code 1558) must be paid as a condition of accepting unintentionally delayed payment of the maintenance fee.

MAINTENANCE FEE (37 CFR 1.20(e)-(g))
The appropriate maintenance fee must be submitted with this petition.

STATEMENT
THE UNDERSIGNED CERTIFIES THAT THE DELAY IN PAYMENT OF THE MAINTENANCE FEE TO THIS PATENT WAS UNINTENTIONAL

PETITIONER(S) REQUEST THAT THE DELAYED PAYMENT OF THE MAINTENANCE FEE BE ACCEPTED AND THE PATENT REINSTATED

THIS PORTION MUST BE COMPLETED BY THE SIGNATORY OR SIGNATORIES

37 CFR 1.378(d) states: "Any petition under this section must be signed by an attorney or agent registered to practice before the Patent and Trademark Office, or by the patentee, the assignee, or other party in interest."

I certify, in accordance with 37 CFR 1.4(d)(4) that I am

○ An attorney or agent registered to practice before the Patent and Trademark Office

◉ A sole patentee

○ A joint patentee; I certify that I am authorized to sign this submission on behalf of all the other patentees.

○ A joint patentee; all of whom are signing this e-petition

○ The assignee of record of the entire interest

Sole Patentee			
A signature of the applicant or representative is required in accordance with 37 CFR 1.33 and 10.18. Please see 37 CFR 1.4(d) for the form of the signature.			
Signature	/ Gary J. Reed/	Date (YYYY-MM-DD)	2010-02-12
Name	Gary J. Reed		

This collection of information is required by 37 CFR 1.378(c). The information is required to obtain or retain a benefit by the public which is to file (and by the USPTO to process) an application. Confidentiality is governed by 35 U.S.C. 122 and 37 CFR 1.11 and 1.14. This collection is estimated to take 1 hour to complete, including gathering, preparing, and submitting the completed application form to the USPTO. Time will vary depending upon the individual case. Any comments on the amount of time you require to complete this form and/ or suggestions for reducing this burden, should be sent to the Chief Information Officer, U.S. Patent and Trademark Office, U.S. Department of Commerce, P.O. Box 1450, Alexandria, VA 22313-1450. DO NOT SEND FEES OR COMPLETED FORMS TO THIS ADDRESS. **This form can only be used when in conjunction with EFS-Web. If this form is mailed to the USPTO, it may cause delays in reinstating the patent.**

Privacy Act Statement

The Privacy Act of 1974 (P.L. 93-579) requires that you be given certain information in connection with your submission of the attached form related to a patent application or patent. Accordingly, pursuant to the requirements of the Act, please be advised that: (1) the general authority for the collection of this information is 35 U.S.C. 2(b)(2); (2) furnishing of the information solicited is voluntary; and (3) the principal purpose for which the information is used by the U.S. Patent and Trademark Office is to process and/or examine your submission related to a patent application or patent. If you do not furnish the requested information, the U.S. Patent and Trademark Office may not be able to process and/or examine your submission, which may result in termination of proceedings or abandonment of the application or expiration of the patent.

The information provided by you in this form will be subject to the following routine uses:

1. The information on this form will be treated confidentially to the extent allowed under the Freedom of Information Act (5 U.S.C. 552) and the Privacy Act (5 U.S.C. 552a). Records from this system of records may be disclosed to the Department of Justice to determine whether the Freedom of Information Act requires disclosure of these records.

2. A record from this system of records may be disclosed, as a routine use, in the course of presenting evidence to a court, magistrate, or administrative tribunal, including disclosures to opposing counsel in the course of settlement negotiations.

3. A record in this system of records may be disclosed, as a routine use, to a Member of Congress submitting a request involving an individual, to whom the record pertains, when the individual has requested assistance from the Member with respect to the subject matter of the record.

4. A record in this system of records may be disclosed, as a routine use, to a contractor of the Agency having need for the information in order to perform a contract. Recipients of information shall be required to comply with the requirements of the Privacy Act of 1974, as amended, pursuant to 5 U.S.C. 552a(m).

5. A record related to an International Application filed under the Patent Cooperation Treaty in this system of records may be disclosed, as a routine use, to the International Bureau of the World Intellectual Property Organization, pursuant to the Patent Cooperation Treaty.

6. A record in this system of records may be disclosed, as a routine use, to another federal agency for purposes of National Security review (35 U.S.C. 181) and for review pursuant to the Atomic Energy Act (42 U.S.C. 218(c)).

7. A record from this system of records may be disclosed, as a routine use, to the Administrator, General Services, or his/her designee, during an inspection of records conducted by GSA as part of that agency's responsibility to recommend improvements in records management practices and programs, under authority of 44 U.S.C. 2904 and 2906. Such disclosure shall be made in accordance with the GSA regulations governing inspection of records for this purpose, and any other relevant (i.e., GSA or Commerce) directive. Such disclosure shall not be used to make determinations about individuals.

8. A record from this system of records may be disclosed, as a routine use, to the public after either publication of the application pursuant to 35 U.S.C. 122(b) or issuance of a patent pursuant to 35 U.S.C. 151. Further, a record may be disclosed, subject to the limitations of 37 CFR 1.14, as a routine use, to the public if the record was filed in an application which became abandoned or in which the proceedings were terminated and which application is referenced by either a published application, an application open to public inspections or an issued patent.

9. A record from this system of records may be disclosed, as a routine use, to a Federal, State, or local law enforcement agency, if the USPTO becomes aware of a violation or potential violation of law or regulation.

UNITED STATES PATENT AND TRADEMARK OFFICE

COMMISSIONER FOR PATENT
UNITED STATES PATENT AND TRADEMARK OFFIC
P.O. BOX 1450
ALEXANDRIA, VA 22313-1450
WWW.USPTO.GO

Paper No. 10

THOMAS F. MEAGHER
KENYON & KENYON
ONE BROADWAY
NEW YORK, N.Y. 10004

COPY MAILED

JUN 1 2 2003

OFFICE OF PETITIONS

In re Application of :
Sergey Lamansky et al :
Application No. 09/978,455 :
Filed: October 16, 2001 :
Attorney Docket No. 10020/20702 :

NOTICE

This is a notice regarding your request for acceptance of a fee deficiency submission under 37 CFR 1.28. On September 1, 1998, the Court of Appeals for the Federal Circuit held that 37 CFR 1.28(c) is the sole provision governing the time for correction of the erroneous payment of the issue fee as a small entity. **See DH Technology v. Synergystex International, Inc. 154 F.3d 1333, 47 USPQ2d 1865 (Fed. Cir. Sept. 1, 1998).**

The Office no longer investigates or rejects original or reissue applications under 37 CFR 1.56. **1098 Off. Gaz. Pat. Office 502 (January 3, 1989)**. Therefore, nothing in this Notice is intended to imply that an investigation was done.

Your fee deficiency submission under 37 CFR 1.28 is hereby **ACCEPTED**.

Inquiries related to this communication should be directed to the Office of Petitions Staff at (703) 305-9285.

This file is being forwarded to Technology Center 1700.

Irvin Dingle
Petitions Examiner
Office of Petitions
Office of the Deputy Commissioner
for Patent Examination Policy

SPE RESPONSE FOR CERTIFICATE OF CORRECTION

Paper No.: _____

DATE : November 6, 2006

TO SPE OF : ART UNIT 2616

SUBJECT : Request for Certificate of Correction for Appl. No.: 09/978479 patent No.: 7,035,287

Please respond to this request for a certificate of correction within 7 days.

Please review the requested changes/corrections as shown in the **COCIN** document(s) in the IFW application image. No new matter should be introduced, nor should the scope or meaning of the claims be changed.

Please complete the response (see below) and forward the completed response to scanning using document code **COCX**.

Magdalene Talley

Certificates of Correction Branch

703-308-9390 ext. 116

Thank You For Your Assistance

The request for issuing the above-identified correction(s) is hereby:

Note your decision on the appropriate box.

- [X] **Approved** — All changes apply.
- [ ] **Approved in Part** — Specify below which changes **do not** apply.
- [ ] **Denied** — State the reasons for denial below.

Comments: _____

SPE

2616

Art Unit

UNITED STATES PATENT AND TRADEMARK OFFICE

Commissioner for Patents
United States Patent and Trademark Office
Washington, D.C. 20231
www.uspto.gov

Paper No. 6

MICHAEL CHAN
NCR CORPORATION
1700 SOUTH PATTERSON BLVD
DAYTON OH 45479-0001

COPY MAILED

AUG 2 9 2002

OFFICE OF PETITIONS

In re Application of
Mackay, et al.
Application No. 09/978,504
Filed: October 16, 2001
Attorney Docket No. 9419.00
Title: 9419.00

DECISION ACCORDING STATUS
UNDER 37 CFR 1.47(a)

This is in response to the petition under 37 CFR 1.47(a), filed March 28, 2002 (Certificate of Mailing dated March 19, 2002).

The petition under 37 CFR 1.47(a) is **GRANTED**.

The above-identified application was filed on October 16, 2001. On November 20, 2001, applicant was mailed a "Notice to File Missing Parts of Nonprovisional Application - Filing Date Granted," requiring an executed oath or declaration (and a surcharge for its late filing). This Notice set a two-month period for reply.

In reply, applicant filed the instant petition, and paid the surcharge for late filing of the declaration. To make timely this reply, applicant obtained a two month extension of time.

A grantable petition under 37 CFR 1.47(a) requires: (1) proof that the non-signing inventor cannot be reached after diligent effort or refuses to sign the oath or declaration after having been presented with the application papers (specification, claims, drawings, oath or declaration); (2) an acceptable oath or declaration in compliance with 37 CFR 1.63; (3) the petition fee; and (4) a statement of the last known address of the non-signing inventor.

Accompanying the petition were, *inter alia*,: (1) a declaration executed by co-inventor Richard Cudd, with the signature block for co-inventor Robin Mackay left blank; and (2) a declaration of attorney Michael Chan, detailing the transmittal of the application papers to Mackay and attesting that an executed declaration from only Cudd has been received.

The declaration filed March 28, 2002 and the petition have been reviewed and found to be in compliance with 37 CFR 1.47(a). This application is hereby accorded Rule 1.47(a) status.

As authorized, Deposit Account No. 14-0225 has been charged the $400 fee for the two month extension of time, the $130 petition fee, and the $130 surcharge for late filing of the declaration.

As provided in 37 CFR 1.47(c), this Office will forward notice of this application's filing to the non-signing inventor at the address given in the petition. Notice of the filing of this application will also be published in the Official Gazette.

The application file is being returned to the Office of Initial Patent Examination for continuation of pre-examination processing.

Telephone inquiries regarding this decision should be directed to Petitions Attorney Cliff Congo at (703) 305-0272.

Beverly M. Flanagan
Supervisory Petitions Examiner
Office of Petitions
Office of the Deputy Commissioner
for Patent Examination Policy

UNITED STATES PATENT AND TRADEMARK OFFICE

COMMISSIONER FOR PATENTS
UNITED STATES PATENT AND TRADEMARK OFFICE
P.O. BOX 1450
ALEXANDRIA, VA 22313-1450
www.uspto.gov

Paper No. 16

PARSONS HSUE & DE RUNTZ LLP
655 MONTGOMERY STREET
SUITE 1800
SAN FRANCISCO CA 94111

COPY MAILED

DEC 3 1 2003

OFFICE OF PETITIONS

In re Application of
Zare et al.
Application No. 09/978,515
Filed: October 15, 2001
Attorney Docket No. M-11422-1P US

DECISION GRANTING PETITION
UNDER 37 CFR 1.137(b)

This is a decision on the petition, filed July 11, 2003, which is being treated as a petition under 37 CFR 1.137(b) to revive the instant nonprovisional application for failure to timely notify the U.S. Patent and Trademark (USPTO) of the filing of an application in a foreign country, or under a multinational treaty that requires publication of applications eighteen months after filing. *See* 37 CFR 1.137(f). The Office of Petitions recently received the above-identified application to render a decision on petition. The Office sincerely apologizes for any inconvenience to petitioner.

The petition is **GRANTED**.

Petitioner states that the present nonprovisional application is the subject of an application filed in an eighteen month publication country on August 13, 2002. However, the USPTO was unintentionally not notified of this filing within 45 days subsequent to the filing of the subject application in an eighteen month publication country.

In view of the above, this application became abandoned pursuant to 35 U.S.C. § 122(b)(2)(B)(iii) and 37 CFR 1.213(c) for failure to timely notify the Office of the filing of an application in a foreign country or under a multilateral international agreement that requires publication of applications 18 months after filing.

A petition to revive an application abandoned pursuant to 35 U.S.C. 122(b)(2)(B)(iii) for failure to notify the USPTO of a foreign filing must be accompanied by:

(1) the required reply which is met by the notification of such filing in a foreign country or under a multinational treaty;

(2) the petition fee as set forth in 37 CFR 1.17(m); and,

(3) a statement that the entire delay in filing the required reply from the due date of the reply until

the filing of a grantable petition was unintentional.

The present petition has been found to be in compliance with 37 CFR 1.137(b). Accordingly, the failure to timely notify the USPTO of a foreign or international filing within 45 days after the date of filing of such foreign or international application as provided by 35 U.S.C. § 122(b)(2)(B)(iii) and 37 CFR 1.213(c) is accepted as having been unintentionally delayed.

The previous Request and Certification under 35 U.S.C. § 122(b)(2)(B)(i) has been rescinded. The Office records indicate that the application published on April 3, 2003.

This application is being forwarded to Technology Center Art Unit 1723.

Any inquiries concerning this decision may be directed to the undersigned at (703) 306-5589.

Christina Tartera Donnell

Christina Tartera Donnell
Senior Petitions Attorney
Office of Petitions

UNITED STATES PATENT AND TRADEMARK OFFICE

Commissioner for Patents
United States Patent and Trademark Office
P.O. Box 1450
Alexandria, VA 22313-1450
www.uspto.gov

LENOVO (US) IP Law
1009 Think Place
Building One, 4th Floor 4B6
Morrisville NC 27560

COPY MAILED

MAR 16 2009

OFFICE OF PETITIONS

In re Patent No. 6,807,055 :
Issue Date: October 19, 2004 : ON PETITION
Application No.: 09/978,519 :
Filed: October 16, 2001 :
Attorney Docket No.:JP920000247US1 :

This is a decision on the petition, filed January 15, 2009, under 37 CFR 1.378(c) to accept the unintentionally delayed payment of the 3.5-year maintenance fee for the above-identified patent.

The petition is **GRANTED**.

The patent issued October 19, 2004. The grace period for paying the 3.5-year maintenance fee expired at midnight October 19, 2008. Therefore, since the petition was filed within twenty-four months after the six-month grace period provided in 37 CFR 1.362(e), this petition was timely filed under the provisions of 37 CFR 1.378(c).

Accordingly, the 3.5-year maintenance fee of $980.00 along with the surcharge of $1640.00 was received on January 15, 2009, and is accepted. The above-identified patent is hereby reinstated as of the mail date of this decision.

Telephone inquiries concerning this matter may be directed to the undersigned at (571) 272-3222.

Kenya A. McLaughlin
Petitions Attorney
Office of Petitions

UNITED STATES PATENT AND TRADEMARK OFFICE

Technology Center 1700.

Mailed: AUG 11 2004

rvk
Paper Number:

In re application of:
Gary H. Knauf
Serial No. 09/978,524
Filed: October 16, 2001
For: METHOD FOR EXTRUSION COATING A LIGHTWEIGHT WEB:

DECISION ON PETITION

This is a response to the PETITION TO WITHDRAW HOLDING OF ABANDONMENT UNDER 37 C.F.R. 1.181, filed June 21, 2004. The petition requests that the abandonment, as set forth in the Notice of Abandonment of June 03, 2004, for failure to timely file a proper response to the Office letter dated September 24, 2003 be withdrawn. The petitioner asserts that applicants timely filed a proper response on October 23, 2003.

DECISION

The instant request is accepted as a timely petition under 37 C.F.R. 1.181 (no fee).

A review of the petitioner's evidence provided with the instant petition indicates that the request has merit. The evidence presented is sufficient to establish that the applicants did file the proper response to the Office letter of September 24, 2003 in a timely manner. The evidence provided includes: 1) a copy of the Response to the Office letter (i.e. Restriction Requirement) of September 24, 2003 with an executed Certificate of Mailing on October 23, 2003; 2) a copy of the returned stamped postcard confirming receipt of the Response by the USPTO dated October 27, 2004; and 3) a Declaration from Mark S. Graham attesting to the timely mailing of the Response on October 23, 2003.

Therefore, the abandonment is hereby withdrawn, and the application is returned to

pending status. The case will be forwarded to the Technical Support Staff for entering of the Response dated October 23, 2003 and then forwarded to the examiner for prompt consideration.

The Petition is **GRANTED**.

Jacqueline Stone, Director
Technology Center 1700
Chemical and Materials Engineering

LUEDEKA, NEELY & GRAHAM, P.C.
PO BOX 1871
KNOXVILLE, TN 37901

UNITED STATES PATENT AND TRADEMARK OFFICE

Commissioner for Patents
United States Patent and Trademark Office
P.O. Box 1450
Alexandria, VA 22313-1450
www.uspto.gov
OIW 05-04

Paper No. 10

ANTONELLI, TERRY, STOUT & KRAUS, LLP
1300 NORTH SEVENTEENTH STREET
SUITE 1800
ARLINGTON VA 22209-9889

COPY MAILED

MAY 28 2004

OFFICE OF PETITIONS

In re Application of	:
Kosugi et al.	: DECISION ON PETITION
Application No. 09/978,631	: UNDER 37 CFR 1.78(a)(3)
Filed: 18 October, 2001	:
Attorney Docket No. 500.37392CX1	:

This is a decision on the petition under 37 CFR 1.78(a)(3), filed on 20 November, 2003, to accept an unintentionally delayed claim under 35 U.S.C. § 120 for the benefit of prior-filed nonprovisional Application No. 09/357,384, filed on 20 July, 1999.

The petition is **GRANTED**.

A petition for acceptance of a late claim for benefit under 37 CFR 1.78(a)(3) is only applicable to those applications filed on or after 29 November, 2000. Further, the petition is appropriate only after the expiration of the period specified in 37 CFR 1.78(a)(2)(ii). In addition, the petition under 37 CFR 1.78(a)(3) must be accompanied by:

> **(1)** the reference required by 35 U.S.C. § 120 and 37 CFR 1.78(a)(2)(i) of the prior-filed application, unless previously submitted;[1]

[1]Any nonprovisional application or international application designating the United States of America claiming the benefit of one or more prior-filed copending applications or international applications designating the United States of America must contain or be amended to contain a reference (amendment to the first line of the specification following the title or in an application data sheet (ADS) to each such prior-filed application, identifying it by application number (consisting of the series code and serial number) or international application number and international

(2) the surcharge set forth in § 1.17(t); and

(3) a statement that the entire delay between the date the claim was due under 37 CFR 1.78(a)(2) and the date the claim was filed was unintentional. The Commissioner may require additional information where there is a question whether the delay was unintentional.

The present application was filed on 6 November, 2001, and was pending at the time the present petition was filed. A reference to the above-noted, prior-filed nonprovisional application has been included in an amendment to the first sentence of the specification following the title, which was filed concurrently with the present petition under 37 CFR 1.78(a)(3).

The present nonprovisional application was filed after 29 November, 2000, and the claim for benefit herein is submitted after the expiration of the period specified in 37 CFR 1.78(a)(2). Also, the reference to the prior-filed nonprovisional application was submitted during the pendency of the nonprovisional application for which the benefit is sought. *See* 35 U.S.C. § 120. Accordingly, having found that the present petition satisfies the conditions of 37 CFR 1.78(a)(3) for acceptance of an unintentionally delayed claim for benefit under 35 U.S.C. § 120, the petition to accept an unintentionally delayed claim to benefit to prior-filed nonprovisional Application No. 09/357,384 is granted.

The granting of the petition to accept the delayed benefit claim to the prior-filed application under 37 CFR 1.78(a)(3) should not be construed as meaning that the instant application is entitled to the benefit of the prior-filed application. In order for the instant application to be entitled to the benefit of the prior-filed application, all other requirements under 35 U.S.C. § 120 and 37 CFR 1.78(a)(1) and (a)(2) must be met. Similarly, the fact that the corrected Filing Receipt accompanying this decision on petition includes the prior-filed application should not be construed as meaning that applicant is entitled to the claim for benefit of priority to the prior-filed application noted thereon. Accordingly, the examiner will, in due course, consider this benefit claim and determine whether the instant application is entitled to the benefit of the earlier filing date.

---

filing date and indicating the relationship of the applications. Cross references to other related applications may be made when appropriate. (*see* § 1.14).

The claim of benefit has been entered in Office records, and a corrected filing receipt reflecting the subject claim of benefit is enclosed with this decision.

The application is being forwarded to Technology Center 3700 for further processing.

Telephone inquiries related to this decision should be directed to Senior Petitions Attorney Douglas I. Wood at 703-308-6918.

Frances Hicks

Frances Hicks
Petitions Examiner
Office of Petitions
Office of the Deputy Commissioner
for Patent Examination Policy

Encl: Corrected Filing Receipt

SPE H. Bennett

SPE RESPONSE FOR CERTIFICATE OF CORRECTION

Paper No.: _____

DATE : 5/31/04

TO SPE OF : ART UNIT 3743

SUBJECT : Request for Certificate of Correction for Appl. No.: 09/978631 Patent No.: 6948552

Please respond to this request for a certificate of correction within 7 days.

Please review the requested changes/corrections as shown in the **COCIN** document(s) in the IFW application image. No new matter should be introduced, nor should the scope or meaning of the claims be changed.

Please complete the response (see below) and forward the completed response to scanning using document code **COCX**.

Lamonte M. Newsome
Certificates of Correction Branch
703-308-9390 ext. 112

Thank You For Your Assistance

The request for issuing the above-identified correction(s) is hereby:

Note your decision on the appropriate box.

- ☒ **Approved** — **All** changes apply.
- ☐ **Approved in Part** — Specify below which changes **do not** apply.
- ☐ **Denied** — State the reasons for denial below.

Comments: _____

Henry Bennett
Supervisory Patent Examiner
Group 2700

SPE **Art Unit**

UNITED STATES PATENT AND TRADEMARK OFFICE

COMMISSIONER FOR PATENTS
UNITED STATES PATENT AND TRADEMARK OFFICE
P.O. BOX 1450
ALEXANDRIA, VA 22313-1450
WWW.USPTO.GOV

PAPER NO. 22

COPY MAILED

MAY 0 8 2003

OFFICE OF PETITIONS

Baxter Healthcare Corporation
One Baxter Parkway
Deerfield, IL 60015-4633

In re Application of
Hal C. Danby
Application No. 09/978,649
Filed: October 16, 2001
Attorney Docket No. BXTW 11004
(DB5798)

ON PETITION

This is a decision on the petition under 37 CFR 1.313(c)(2) to withdraw the above-identified application from issue after payment of the issue fee, filed May 7, 2003.

The petition is **GRANTED**.

The above-identified application is withdrawn from issue for consideration of a submission under 37 CFR 1.114 (request for continued examination). See 37 CFR 1.313(c)(2).

Petitioner is advised that the issue fee paid on April 14, 2003 in the above-identified application cannot be refunded. If, however, the above-identified application is again allowed, petitioner may request that it be applied towards the issue fee required by the new Notice of Allowance.[1]

It does not appear that the instant petition is signed by an attorney of record. However, in accordance with 37 CFR 1.34(a), the signature of Kurt F. James appearing on the correspondence shall constitute a representation to the United States Patent and Trademark Office that he is authorized to represent the particular party in whose behalf he acts. However, if Mr. James desires to receive correspondence regarding this file, the appropriate power of attorney documentation must be submitted. A courtesy copy of this decision is being mailed to Mr. James, the petitioner herein. However, until otherwise instructed, all future correspondence regarding this application file will be directed solely to the above-noted correspondence address of record.

---

[1] The request to apply the issue fee to the new Notice may be satisfied by completing and returning the new Issue Fee Transmittal Form PTOL-85(b), which includes the following language thereon: "Commissioner for Patents is requested to apply the Issue Fee and Publication Fee (if any) or re-apply any previously paid issue fee to the application identified above." Petitioner is advised that, whether a fee is indicated as being due or not, the Issue Fee Transmittal Form **must** be completed and timely submitted to avoid abandonment. Note the language in bold text on the first page of the Notice of Allowance and Fee(s) Due (PTOL-85).

Telephone inquiries should be directed to the undersigned at (703) 305-9220.

After receipt of the file in the Office of Petitions the application will be forwarded to Technology Center AU 3746 for processing of the request for continued examination under 37 CFR 1.114.[2]

Sherry D. Brinkley
Petitions Examiner
Office of Petitions
Office of the Deputy Commissioner
for Patent Examination Policy

cc:

KURT F. JAMES
SENNIGER, POWERS, LEAVITT & ROEDEL
ONE METROPOLITAN SQUARE, 16TH FLOOR
ST. LOUIS, MO 63102

[2] Receipt is also acknowledged of a Preliminary Amendment.

Received from < 231434 2 > at 11/6/03 4:12:58 PM [Eas[illegible]andard Time]

RECEIVED MAY 1 2 2003

UNITED STATES PATENT AND TRADEMARK OFFICE

COMMISSIONER FOR PATENTS
UNITED STATES PATENT AND TRADEMARK OFFICE
P.O. BOX 1450
ALEXANDRIA, VA 22313-1450
WWW.USPTO.GOV

PAPER NO.

COPY MAILED

MAY 0 8 2003

OFFICE OF PETITIONS

Baxter Healthcare Corporation
One Baxter Parkway
Deerfield, IL 60015-4633

In re Application of
Hal C. Danby
Application No. 09/978,649
Filed: October 16, 2001
Attorney Docket No. BXTW 11004
(DB5798)

ON PETITION

This is a decision on the petition under 37 CFR 1.313(c)(2) to withdraw the above-identified application from issue after payment of the issue fee, filed May 7, 2003.

The petition is **GRANTED**.

The above-identified application is withdrawn from issue for consideration of a submission under 37 CFR 1.114 (request for continued examination). See 37 CFR 1.313(c)(2).

Petitioner is advised that the issue fee paid on April 14, 2003 in the above-identified application cannot be refunded. If, however, the above-identified application is again allowed, petitioner may request that it be applied towards the issue fee required by the new Notice of Allowance.[1]

It does not appear that the instant petition is signed by an attorney of record. However, in accordance with 37 CFR 1.34(a), the signature of Kurt F. James appearing on the correspondence shall constitute a representation to the United States Patent and Trademark Office that he is authorized to represent the particular party in whose behalf he acts. However, if Mr. James desires to receive correspondence regarding this file, the appropriate power of attorney documentation must be submitted. A courtesy copy of this decision is being mailed to Mr. James, the petitioner herein. However, until otherwise instructed, all future correspondence regarding this application file will be directed solely to the above-noted correspondence address of record.

---

[1] The request to apply the issue fee to the new Notice may be satisfied by completing and returning the new Issue Fee Transmittal Form PTOL-85(b), which includes the following language thereon: "Commissioner for Patents is requested to apply the Issue Fee and Publication Fee (if any) or re-apply any previously paid issue fee to the application identified above." Petitioner is advised that, whether a fee is indicated as being due or not, the Issue Fee Transmittal Form must be completed and timely submitted to avoid abandonment. Note the language in bold text on the first page of the Notice of Allowance and Fee(s) Due (PTOL-85).

* above info RCE, and am B filing docketed

UNITED STATES PATENT AND TRADEMARK OFFICE

Commissioner for Patents
United States Patent and Trademark Office
P.O. Box 1450
Alexandria, VA 22313-1450
www.uspto.gov

JAN 26 2007

HELLER EHRMAN LLP
275 MIDDLEFIELD ROAD
MENLO PARK CA 94025-3506

In re Application of	:
Avi J. ASHKENAZI et al	:
Serial No.: 09/978,665	: PETITION DECISION
Filed: October 16, 2001	:
Attorney Docket No.: 39780-2630 PIC19	:

This is in response to the petition under 37 CFR 1.181, filed November 06, 2006, requesting Designation of rejection made in the Examiners Answer as New Grounds Of Rejection and also to re-open prosecution.

BACKGROUND

A review of the file history shows that the examiner mailed a final Office action to applicants on November 18, 2005 wherein:

All objections to the specifications were withdrawn.
All previous claim objections were withdrawn.
The rejection of claims 58-60 and 62 under 35 U.S.C. 101 was maintained.
The rejection of claims 58-60 and 62 under 35 U.S.C. 112 first paragraph scope of enablement using the Fontaine et al. and Streichert et al. references was maintained..
All the rejections under 35 U.S.C. 112 second paragraph were withdrawn.
The rejection of claims 58-60 and 62 under 35 U.S.C. 103 obvious over Carninci et al. was maintained.

The applicants responded on January 11, 2006 with after final arguments.

The examiner mailed an advisory March 28, 2006 wherein:

The rejection of claims 58-60 and 62 under 35 U.S.C. 103 over Carninci et al. was withdrawn.
The rejection of claims 58-60 and 62 under 35 U.S.C. 101 and 112 scope of Enablement was maintained.

Appellants filed an Appeal Brief on July 18, 2006.

In response thereto, an Examiners Answer was mailed on September 06, 2006, wherein the examiner, in response to the arguments, cited two new references of Ripps et al. and Farrar et al. These two new references were not cited on an 892 form, nor was the rejection set forth as being a new ground of rejection.

In response, appellants filed this petition under 37 CFR 1.181, on November 06, 2006, requesting designating the rejection as a New Ground of Rejection and also requesting that prosecution be re-opened. Appellants filed a reply brief concurrently with this petition.

DISCUSSION

Appellants submit that a number of grounds of rejection set forth in the Examiner's Answer mailed on September 6, 2006 constitute new grounds of rejection. Appellants request that the grounds of rejection and the two new references which are being cited in the Examiner's Answer in support of the grounds of rejection be designated new grounds of rejection. Appellants request a corrected Examiner's Answer which identifies the rejections as new grounds for rejection and Appellants further request that prosecution be reopened.

Appellants argue that the Examiner has raised two new references for the first time in the Examiner's Answer. Specifically:

(1) Ripps et al., 2002, Exp. Eye Res. 74:327-336; and
(2) Farrar et al., 2002; E_MBO J. 21:857-864.

Appellants submit that the citation of such new prior art references for the first time in an Examiner's answer constitutes a new ground of rejection and is not permissible.

Appellants argue that the examiner has cited Ripps et al. and Farrar et al. for the first time at page 5 of the Examiner's Answer, where the examiner states:

> As can be seen, RP is a hereditary condition (Farrar - Abstract; Ripps - Introduction) which results largely from mutations in genes encoding rhodopsin and other rod-specific proteins. Ripps continues that "depending upon the site of the mutation, photoreceptor cell death can result from aberrations in one or more of the many functions required for the initiation and maintenance of normal vision." Page 858, paragraph 2, of Farrar states that "mutations in 21 genes have now been identified in RP... and a further 24 disease loci have been found for syndromes incorporating RP. Furthermore, apoptotic compounds also appear to be involved (Ripps page 328, left column, second full paragraph).

Appellants submit that they are unable to adequately rebut the Ripps et al. and Farrar et al. references and the rejections based on them without presenting substantive evidence of their own.

Appellants argue that the MPEP and the case law clearly state that the examiner is not allowed to make new grounds of rejection and cite a new reference. Appellants argue MPEP section 1207.3 (III) which states that:

> *In addition, if an Appellant has clearly set forth an argument in a previous reply*

during prosecution of the application and the Examiner has failed to address that argument, the Examiner would not be permitted to add a new ground of rejection in the Examiner's answer to respond to that argument but would be permitted to reopen prosecution, if appropriate. (Emphasis added; See M.P.E.P. § 1207.03; Situations where new grounds of rejection are not permissible, III).

Appellants correctly argue this is the case in the current application.

In view of the above, prosecution is being reopened so that appellants may properly respond to the new grounds of rejection, and submit new evidence in rebuttal.

DECISION

The petition is **GRANTED**

This application will be forwarded to the examiner for an action not inconsistent with this decision.

Should there be any questions about this decision please contact Ms. Marianne Seidel, by letter addressed to Director, TC 1600, at the address listed above, or by telephone at 571-272-0584 or by facsimile sent to the general Office facsimile number, 571-273-8300.

George C. Elliott

George C. Elliott
Director, Technology Center 1600

UNITED STATES PATENT AND TRADEMARK OFFICE

COMMISSIONER FOR PATENTS
UNITED STATES PATENT AND TRADEMARK OFFICE
P.O. BOX 1450
ALEXANDRIA, VA 22313-1450
www.uspto.gov

Mayer, Brown, Rowe & Maw, L.L.P.
Intellectual Property Group
1909 K Street, N.W.
Washington D.C. 20006-1101

MAILED

MAY 12 2005

DIRECTOR'S OFFICE
TECHNOLOGY CENTER 2600

In re Application of
Soo-Jun Park, et al.
Application No. 09/978,668
Filed: October 18, 2001
For: **NON-LINEAR QUANTIZATION AND SIMILARITY MATCHING METHODS FOR RETRIEVING IMAGE DATA**

DECISION ON PETITION
TO WITHDRAW HOLDING OF
ABANDONMENT

This is a decision on the petition filed March 18, 2005, which is treated as a Petition to Withdraw Holding of Abandonment pursuant to 37 C.F.R. §1.181. No fee is required.

This application is held abandoned for failure to timely file a response to the restriction requirement mailed September 28, 2004. A Notice of Abandonment has not yet been mailed.

Petitioner asserts that the restriction requirement was not received. Petitioner also states that a revocation of power of attorney was submitted on March 17, 2005.

The petition fails to comply with MPEP §711.03(c) for a successful petition to withdraw the holding of abandonment. Petitioner does not attest to a search of the file jacket or docket records and petitioner also failed to supply a copy of their docket record with explanation of said record.

A review of the application file reveals that Applicant's revocation of power of attorney was filed on March 17, 2005 and again on March 18, 2005, almost six months after the restriction requirement was mailed.

However, review of the application file also reveals that a copy of the restriction requirement was returned as undelivered on October 1, 2004. Therefore, there was an obvious irregularity in the mailing of the Office communication.

In view of the above stated reasons, it is apparent that Applicant did not receive the restriction requirement mailed September 29, 2004. Thus, the application was not abandoned in fact. Accordingly, the holding of abandonment is withdrawn.

The petition is **GRANTED**.

The application file is being forwarded to the TC 2600 technical support staff for processing the revocation of power of attorney, change the correspondence address, and re-mail the restriction requirement. The time period for response to the restriction requirement will be reset to run from the date of re-mailing.

Dwayne Bost
Special Program Examiner
Technology Center 2600
Communications

UNITED STATES PATENT AND TRADEMARK OFFICE

COMMISSIONER FOR PATENTS
UNITED STATES PATENT AND TRADEMARK OFFICE
P.O. BOX 1450
ALEXANDRIA, VA 22313-1450
www.uspto.go

Paper No. 11

NAVAL MEDICAL RESEARCH CENTER
ATTN: (CODE 00L)
503 ROBERT GRANT AVENUE
SILVER SPRING, MD 20910-7500

COPY MAILED
MAR 17 2004
OFFICE OF PETITIONS

In re Application of :
Brice et al. :
Application No. 09/978,669 :
Filed: October 18, 2001 : ON PETITION
Attorney Docket No. :
NC 82,574

This is a decision in response to the petition under 37 CFR 1.137(b), filed February 24, 2004, to revive the above-identified application.

This Petition is hereby **granted**.

The above-identified application became abandoned for failure to reply in a timely manner to the non-final Office action, mailed March 24, 2003. The Office action set a three (3) month period for reply, and provided for extensions of time under 37 CFR 1.136(a). No reply having been received, the application became abandoned on June 25, 2003. A Notice of Abandonment was mailed on November 20, 2003.

With the instant petition, Petitioner has satisfied the requirements of a grantable petition under 37 CFR 1.137(b). An Election and a Preliminary Amendment in response to the March 24, 2003 Office action are filed with the instant petition. Accordingly, the petition is granted.

This application is being forwarded to Technology Center Art Unit 1646 for processing of the Election and a Preliminary Amendment, filed with the instant petition on February 24, 2004, in due course.

Telephone inquiries concerning this matter should be directed to the undersigned at (703) 305-0014.

Derek L. Woods
Petitions Attorney
Office of Petitions

UNITED STATES PATENT AND TRADEMARK OFFICE

Commissioner for Patents
United States Patent and Trademark Office
P.O. Box 1450
Alexandria, VA 22313-1450
www.uspto.gov

NAVAL MEDICAL RESEARCH CENTER
ATTN: (CODE 00L)
503 ROBERT GRANT AVENUE
SILVER SPRING, MD 20910-7500

COPY MAILED

SEP 1 4 2005

OFFICE OF PETITIONS

In re Application of :
Gary Todd Brice et al :
Application No. 09/978,669 : ON PETITION
Filed: October 18, 2001 :
Attorney Docket No. NC 82,574 :

This is a decision on the petition under 37 CFR 1.137(b), filed August 10, 2005, to revive the above-identified application.

The petition is **DISMISSED**.

Any request for reconsideration of this decision must be submitted within TWO (2) MONTHS from the mail date of this decision. Extensions of time under 37 CFR 1.136(a) are permitted. The reconsideration request should include a cover letter entitled "Renewed Petition under 37 CFR 1.137(b)." No additional fee is required with any renewed petition. Petitioner is advised that this is **not** a final agency action decision.

The above-identified application became abandoned for failure to reply in a timely manner to the Notice of Non-Compliant Amendment (37 CFR 1.121(Notice)) mailed November 2, 2004. The Notice set a period for reply of (1) month. No extensions of time under the provisions of 37 CFR 1.136(a) were obtained. Accordingly, the above-identified application became abandoned on December 3, 2004.

A grantable petition to revive an abandoned application under 37 CFR 1.137(b) must be accompanied by: (1) the required reply (unless previously filed), which may met by the filing of a continuing application in a nonprovisional application abandoned for failure to prosecute, but must be the payment of the issue fee or any outstanding balance thereof in an application or patent, abandoned or lapsed for failure to pay the issue fee or any portion thereof; (2) the petition fee as set forth in 37 CFR 1.17(m); (3) a statement that the entire delay in filing the required reply from the due date for the reply until the filing of a grantable petition pursuant to 37 CFR 1.137(b) was unintentional; and (4) any terminal disclaimer (and fee as set forth in 37 CFR 1.20(d)). This petition lacks item (1) above.

As to item (1), the amendment filed on August 10, 2005 has been reviewed by examiner Seharaseyon. He determined that said amendment does not indicate the changes to the claims in

the claim as filed. Therefore, the proposed amendment does not constitute a proper reply under 37 CFR 1.137(b)(1) and thus this petition must be dismissed.

Further correspondence with respect to this matter should be addressed as follows:

By mail:	Mail Stop PETITIONS Commissioner for Patents Post Office Box 1450 Alexandria, VA 22313-1450
By hand:	Customer Service Window Randolph Building 401 Dulany Street Alexandria, VA 22314
By fax:	(571) 272-3220 ATTN: Office of Petitions

Telephone inquiries concerning this decision should be directed to Wan Laymon at (571) 272-3220.

Wan Laymon

Wan Laymon
Petitions Examiner
Office of Petitions
Office of the Deputy Commissioner
for Patent Examination Policy

UNITED STATES PATENT AND TRADEMARK OFFICE

Commissioner for Patents
United States Patent and Trademark Office
P.O. Box 1450
Alexandria, VA 22313-1450
www.uspto.gov

NAVAL MEDICAL RESEARCH CENTER
ATTN: (CODE 00L)
503 ROBERT GRANT AVENUE
SILVER SPRING MD 20910-7500

COPY MAILED
DEC 29 2006
OFFICE OF PETITIONS

In re Application of	:	
BRICE, et. al.	:	
Application No. 09/978,669	:	DECISION ON PETITION
Filed: November 18, 2001	:	UNDER 37 CFR 1.137(b)
Attorney Docket No. NC 82,574	:	

This is a decision on the **renewed** petition filed March 10, 2006 under 37 CFR 1.137(b), to revive the above-identified application.

The petition is **GRANTED**.

The application became abandoned for failure to reply in a timely manner to the Notice of Non-Compliant Amendment (37 CFR 1.121 (Notice) mailed November 2, 2004 which set a shortened statutory period for reply of one (1) month or thirty (30) days (whichever is later). No extensions of time under the provisions of 37 CFR 1.136(a) were obtained. Accordingly, the application became abandoned on December 3, 2004.

The petition satisfies the conditions for revival pursuant to the provisions of 37 CFR 1.137 (b) in that (1) the reply in the form of an election and preliminary amendment; (2) the petition fee of $1500 for a large entity; and (3) the required statement of unintentional delay have been received. Accordingly, the reply to the Notice of Non-Compliant Amendment requirement of November 2, 2004 is accepted as having been unintentionally delayed.

Telephone inquiries concerning this decision should be directed to Amelia Au at (571) 272-7414. All other inquiries concerning either the examination or status of the application should be directed to Technology Center 1647.

The application file is being referred to Technology Center Art Unit 1647 for appropriate action on the concurrently filed Election and Preliminary Amendment filed on March 10, 2005.

Amelia Au
Petitions Examiner
Office of Petitions

UNITED STATES PATENT AND TRADEMARK OFFICE

MAY 30 2007

Commissioner for Patents
United States Patent and Trademark Office
P.O. Box 1450
Alexandria, VA 22313-1450
www.uspto.gov

HELLER EHRMAN LLP
275 MIDDLEFIELD ROAD
MENLO PARK CA 94025-3506

In re Application of	:
Goddard et al.	:
Serial No.: 09/978,681	: PETITION DECISION
Filed: October 16, 2001	:
Attorney Docket No.: GNE.2630P1C18	:

This is in response to the Petition under 37 C.F.R. 1.181, filed March 2, 2007 requesting (1) that the rejection containing the two new references which have been used by the examiner in the Examiner's Answer be designated as new grounds of rejection; (2) that the examiner provide a corrected Examiner's Answer which identifies the rejections as new grounds of rejection; and (3) that prosecution be reopened because of these new grounds of rejection.

BACKGROUND

A review of the file history shows that the examiner mailed a final Office action on November 18, 2005 wherein claims 58-65 and 68-80 were rejected under 35 U.S.C. 112, first paragraph, as failing to comply with enablement requirement; and claims 58-62 and 69-80 were rejected under 35 U.S.C. 112, first paragraph, as containing subject matter which was not described in the specification.

In response, applicants filed an amendment and response to the final Office action on January 11, 2006.

On April 11, 2006, the examiner mailed an advisory action indicating the proposed amendment would be entered but would **not** place the application in condition for allowance.

On April 18, 2006, applicants filed a Notice of Appeal.

On July 18, 2006, applicants filed an Appeal Brief arguing against the rejections made in the final Office action of November 18, 2005.

On August 9, 2006, the examiner sent applicants a Notification of Non-Compliant Appeal Brief.

On October 10, 2006, applicants filed a second Appeal Brief arguing against the rejections made in the final Office action of November 18, 2005.

On January 3, 2007, the examiner mailed an Examiner's Answer rejecting claims 63-65, 68-70 and 76-80 under 35 U.S.C. 112, first paragraph, as failing to comply with the enablement requirement; rejecting claims 69-70 and 76-80 under 35 U.S.C. 112, first paragraph, as also not complying with the enablement requirement and addressed the arguments set forth in the Appeal Brief.

In response thereto, appellants filed this petition under 37 CFR 1.181, on March 2, 2007, requesting (1) that the rejection containing the two new references which have been used by the examiner in the Examiner's Answer be designated as new grounds of rejection; (2) that the examiner provide a corrected Examiner's Answer which identifies the rejections as new grounds of rejection; and (3) that prosecution be reopened because of these new grounds of rejection. Appellants also filed a reply brief concurrently with this petition.

DISCUSSION

Appellants submit that the examiner has raised the two new references of Ripps et al. and Farrar et al. for the first time in the Examiner's Answer. In addition, appellants argue the examiner has not previously raised the issue of multiple gene dependency of RP, as discussed by Ripps et al. and Farrar et al. and that they are unable to adequately rebut the references and the rejections based on Ripps et al. and Farrar et al without presenting substantive evidence of their own. Appellants' points are well taken and, therefore, persuasive.

DECISION

For the above reasons, the petition under 37 C.F.R. 1.181 requesting (1) that the rejection containing the two new references which have been used in the Examiner's Answer be designated as new grounds of rejection; (2) that the examiner provide a corrected Examiner's Answer which identifies the rejections as new grounds of rejections; and (3) that the FINALITY be withdrawn and that prosecution be reopened because of these new grounds of rejection is **GRANTED-IN-PART.**

Applicants' first request that the rejections in the Examiner's Answer be designated "new grounds of rejection" is **GRANTED**.

Applicants' second request has been effectively granted by this Decision on Petition designating the rejections in the Examiner's Answer to be "new grounds of rejection." The further request for the corrected Examiner's Answer is deemed to be moot in view of this Decision on Petition and therefore, **DISMISSED**.

Applicants' third request to have the FINALITY of the application withdrawn and prosecution reopened is **GRANTED** as this is a proper request under the Rules of Prosecution when a new ground of rejection is advanced in an Examiner's Answer. (Alternatively, applicants may rely solely on their Reply Brief and proceed to the Board.)

In view of applicants' expressed limited ability to rebut the references or present new evidence, as noted above, applicants are given TWO MONTHS from the mailing date of this Decision within which to submit any additional arguments, exhibits, affidavits or other evidence which they consider necessary in order to rebut the examiner's new grounds of rejection set forth in the Examiner's Answer. Failure to make any submission will be taken as applicants' agreement to rely solely on the already submitted Reply Brief

This application is being returned to the examiner for consideration of the Reply Brief which will be treated as a reply to a new "Non-Final" rejection set forth in the Examiner's Answer and further action not inconsistent with this decision.

Should there be any questions about this decision please contact Ms. Marianne Seidel, by letter addressed to Director, TC 1600, at the address listed above, or by telephone at 571-272-0584 or by facsimile sent to the general Office facsimile number, 571-273-8300.

John LeGuyader
Director, Technology Center 1600

UNITED STATES PATENT AND TRADEMARK OFFICE

COMMISSIONER FOR PATENTS
UNITED STATES PATENT AND TRADEMARK OFFICE
P.O. BOX 1450
ALEXANDRIA, VA 22313-1450
www.uspto.gov

Paper No.

GOODWIN PROCTER LLP
135 COMMONWEALTH DRIVE
MENLO PARK CA 94025

COPY MAILED
DEC 22 2008

In re Application of	:	
Goddard et al.	:	LETTER REGARDING
Application No. 09/978,681	:	PATENT TERM ADJUSTMENT
Filed: October 16, 2001	:	
Atty Docket No. GNE.2630P1C18	:	

This is in response to the "REQUEST FOR RECONSIDERATION OF PATENT TERM ADJUSTMENT UNDER 37 C.F.R. § 1.705(b)," filed September 26, 2008. Pursuant to their duty of good faith and candor to the Office, applicants disclose that the initial determination of patent term adjustment indicated in the notice of allowance of two hundred fifteen (215) days is incorrect and should be one hundred eighty-eight (188) days.

The request for review of the patent term adjustment is **GRANTED to the extent indicated herein**.

The Office has updated the PAIR screen to reflect that the correct Patent Term Adjustment (PTA) determination at the time of the mailing of the Notice of Allowance is one hundred forty-two **(142)** days. A copy of the updated PAIR screen, showing the correct determination, is enclosed.

On June 30, 2008, the Office mailed the Determination of Patent Term Adjustment under 35 U.S.C. 154(b) in the above-identified application. The Notice stated that the patent term adjustment to date is 215 days. Applicants point out that a USPTO delay of 51 days was entered twice doubling the amount of USPTO delay. Likewise, applicants point out that the Office erred in entering an applicant delay of 24 days twice.

A review of the application history confirms the error noted by applicants. The duplicate entries of 51 days of Office delay and 24 days of applicant delay have been removed.

Moreover, a review of the record reveals that the patent term adjustment at the time of the mailing of the notice of allowance does not consider that the appeal brief filed July 18, 2006 was defective. Given that an appeal brief in compliance was not filed until October 10, 2006, the period of adjustment for Office delay in responding with the mailing of an examiner's answer is 0 days, not 46 days. 37 CFR 1.703(a)(4) provides that the period of adjustment for Office delay is the number of days in the period beginning on the day after the date that is four months after the date an appeal brief in compliance with § 1.192 was filed, October 10, 2006, and ending on the date of mailing of an examiner's answer under § 1.193, January 3, 2007. As the examiner's answer was mailed within four months, there was no Office delay.

In view thereof, the patent term adjustment at the time of the mailing of the notice of allowance is one hundred forty-two (142) days.

As this letter was submitted as an advisement to the Office of an error in applicants' favor, the Office will not assess the $200.00 fee under 37 CFR 1.18(e). The Office thanks applicants for their good faith and candor in bringing this to the attention of the Office.

The application is being forwarded to the Office of Data Management for issuance of a patent. The patent term adjustment indicated on the patent (as shown on the Issue Notification mailed about three weeks prior to patent issuance) will include any additional adjustment accrued both for Office delay in issuing the patent more than four months after payment of the issue fee and satisfaction of all outstanding requirements, and for the Office taking in excess of three years to issue the patent (to the extent that the three-year period does not overlap with periods already accorded).

Telephone inquiries specific to this matter should be directed to the undersigned at (571) 272-3219.

Nancy Johnson

Nancy Johnson
Senior Petitions Attorney
Office of Petitions

Enclosure: Copy of REVISED PALM Screen

Day : Sunday
Date: 12/21/2008

PALM INTRANET

Time: 22:42:59

PTA Calculations for Application: 09/978681			
Application Filing Date:	10/16/2001	PTO Delay (PTO):	442
Issue Date of Patent:		Three Years:	0
Pre-Issue Petitions:	0	Applicant Delay (APPL):	227
Post-Issue Petitions:	0	Total PTA (days):	142
PTO Delay Adjustment:	-73		

File Contents History

Number	Date	Contents Description	PTO	APPL	START
144	12/21/2008	ADJUSTMENT OF PTA CALCULATION BY PTO		46	
143	12/10/2008	ADJUSTMENT OF PTA CALCULATION BY PTO	24		
142	12/10/2008	ADJUSTMENT OF PTA CALCULATION BY PTO		51	
135	06/30/2008	MAIL NOTICE OF ALLOWANCE			
134	06/27/2008	ISSUE REVISION COMPLETED			
133	06/27/2008	DOCUMENT VERIFICATION			
132	06/27/2008	ALLOWED CASE RETURNED TO THE EXAMINER FOR CLERICAL PROCESSING			
131	06/27/2008	NOTICE OF ALLOWANCE DATA VERIFICATION COMPLETED			
130	06/27/2008	NOTICE OF ALLOWABILITY			
129	06/10/2008	INFORMATION DISCLOSURE STATEMENT CONSIDERED			
128	06/10/2008	INFORMATION DISCLOSURE STATEMENT CONSIDERED			
127	06/10/2008	INFORMATION DISCLOSURE STATEMENT (IDS) FILED			
126	06/25/2008	DATE FORWARDED TO EXAMINER			
125	06/10/2008	REQUEST FOR CONTINUED EXAMINATION (RCE)			
124	06/25/2008	DISPOSAL FOR A RCE/CPA/129 (EXPRESS ABANDONMENT IF CPA)			
123	06/10/2008	INFORMATION DISCLOSURE STATEMENT (IDS) FILED			
122	06/10/2008	INFORMATION DISCLOSURE STATEMENT (IDS) FILED			
121	06/10/2008	WORKFLOW - REQUEST FOR RCE - BEGIN			
120	06/04/2008	FINISHED INITIAL DATA CAPTURE			

119	05/08/2008	SEQUENCE FORWARDED TO PUBS ON TAPE			
118	03/19/2008	SEQUENCE FORWARDED TO PUBS ON TAPE			
117	03/24/2008	RECEIPT INTO PUBS			
116	03/14/2008	EXPORT TO INITIAL DATA CAPTURE			
115	03/10/2008	MAIL NOTICE OF ALLOWANCE			
115	03/10/2008	MAIL NOTICE OF ALLOWANCE			
114	02/20/2008	NOTICE OF APPEAL FILED AFTER NOA			
114	02/20/2008	NOTICE OF APPEAL FILED AFTER NOA			
113	02/29/2008	ISSUE REVISION COMPLETED			
113	02/29/2008	ISSUE REVISION COMPLETED			
112	02/29/2008	NOTICE OF ALLOWANCE DATA VERIFICATION COMPLETED			
112	02/29/2008	NOTICE OF ALLOWANCE DATA VERIFICATION COMPLETED			
111	02/29/2008	CASE DOCKETED TO EXAMINER IN GAU			
111	02/29/2008	CASE DOCKETED TO EXAMINER IN GAU			
110	02/21/2008	ALLOWED CASE RETURNED TO THE EXAMINER FOR CLERICAL PROCESSING			
110	02/21/2008	ALLOWED CASE RETURNED TO THE EXAMINER FOR CLERICAL PROCESSING			
109	02/21/2008	DOCUMENT VERIFICATION			
109	02/21/2008	DOCUMENT VERIFICATION			
108	02/21/2008	NOTICE OF ALLOWABILITY			
108	02/21/2008	NOTICE OF ALLOWABILITY			
107	03/05/2004	INFORMATION DISCLOSURE STATEMENT CONSIDERED			
106	01/18/2005	INFORMATION DISCLOSURE STATEMENT CONSIDERED			
105	02/06/2008	DATE FORWARDED TO EXAMINER			
105	02/06/2008	DATE FORWARDED TO EXAMINER			
104	12/16/2007	AMENDMENT AFTER FINAL REJECTION		24	100
104	12/16/2007	AMENDMENT AFTER FINAL REJECTION		24	100
103	12/16/2007	REQUEST FOR EXTENSION OF TIME - GRANTED			
103	12/16/2007	REQUEST FOR EXTENSION OF TIME - GRANTED			
102	01/18/2005	INFORMATION DISCLOSURE STATEMENT (IDS) FILED			
101	03/05/2004	INFORMATION DISCLOSURE STATEMENT (IDS) FILED			

100	08/22/2007	MAIL FINAL REJECTION (PTOL - 326)	51		86
100	08/22/2007	MAIL FINAL REJECTION (PTOL - 326)	51		86
99	08/20/2007	FINAL REJECTION			
98	08/22/2007	MAIL NOTICE OF WITHDRAWN ACTION			
98	08/22/2007	MAIL NOTICE OF WITHDRAWN ACTION			
97	08/22/2007	DATE FORWARDED TO EXAMINER			
96	08/22/2007	LETTER WITHDRAWING / VACATING OFFICE ACTION			
91	07/30/2007	AMENDMENT AFTER BRIEF			
90	05/30/2007	MAIL-PETITION DECISION - GRANTED IN PART			
89	03/02/2007	PETITION ENTERED			
88	03/02/2007	REQUEST FOR ORAL HEARING			
87	03/08/2007	DATE FORWARDED TO EXAMINER			
86	03/02/2007	REPLY BRIEF FILED			
85	03/08/2007	EXAM. ANS. REVIEW COMPLETE			
84	01/03/2007	MAIL EXAMINER'S ANSWER	46		75
83	12/26/2006	EXAMINER'S ANSWER TO APPEAL BRIEF			
82	10/21/2006	APPEAL BRIEF REVIEW COMPLETE			
81	10/21/2006	DATE FORWARDED TO EXAMINER			
80	10/10/2006	APPEAL BRIEF FILED			
79	10/10/2006	REQUEST FOR EXTENSION OF TIME - GRANTED			
78	08/09/2006	NOTICE -- DEFECTIVE APPEAL BRIEF			
77	08/08/2006	APPEAL BRIEF REVIEW COMPLETE			
76	08/08/2006	DATE FORWARDED TO EXAMINER			
75.1	07/18/2006	DEFECTIVE / INCOMPLETE APPEAL BRIEF FILED			
75	07/18/2006	APPEAL BRIEF FILED			
74	07/18/2006	REQUEST FOR EXTENSION OF TIME - GRANTED			
73	04/25/2006	DATE FORWARDED TO EXAMINER			
72	04/18/2006	FEE PAYMENT RECORDED (FEES FILED SEPARATELY E.G. NOT WITH ORIGINAL PAPERS, ETC).			
71	04/18/2006	NOTICE OF APPEAL FILED		59	63
70	04/18/2006	REQUEST FOR EXTENSION OF TIME - GRANTED			
69	04/11/2006	MAIL ADVISORY ACTION (PTOL - 303)			
68	03/23/2006	ADVISORY ACTION (PTOL-303)			

67	01/25/2006	DATE FORWARDED TO EXAMINER			
66	01/11/2006	AMENDMENT AFTER FINAL REJECTION			
65	01/25/2006	DATE FORWARDED TO EXAMINER			
64	01/11/2006	AMENDMENT AFTER FINAL REJECTION			
63	11/18/2005	MAIL FINAL REJECTION (PTOL - 326)			
62	11/16/2005	FINAL REJECTION			
61	09/27/2005	DATE FORWARDED TO EXAMINER			
60	09/15/2005	RESPONSE AFTER NON-FINAL ACTION			
59	06/17/2005	MAIL NON-FINAL REJECTION			
58	06/13/2005	NON-FINAL REJECTION			
57	04/05/2005	RULE 47 / 48 CORRECTION OF INVENTORSHIP PAPERS FILED			
56	04/11/2005	DATE FORWARDED TO EXAMINER			
55	04/05/2005	AMENDMENT AFTER FINAL REJECTION			
54.7	01/19/2005	INFORMATION DISCLOSURE STATEMENT (IDS) FILED			
53	01/19/2005	MAIL FINAL REJECTION (PTOL - 326)			
52	01/18/2005	FINAL REJECTION			
51.7	11/10/2004	INFORMATION DISCLOSURE STATEMENT (IDS) FILED			
51	11/10/2004	INFORMATION DISCLOSURE STATEMENT (IDS) FILED			
50	11/19/2004	DATE FORWARDED TO EXAMINER			
49	11/10/2004	AMENDMENT SUBMITTED/ENTERED WITH FILING OF CPA/RCE			
48	11/19/2004	DATE FORWARDED TO EXAMINER			
47	11/10/2004	REQUEST FOR CONTINUED EXAMINATION (RCE)		61	40
46	11/19/2004	DISPOSAL FOR A RCE/CPA/129 (EXPRESS ABANDONMENT IF CPA)			
45	11/10/2004	REQUEST FOR EXTENSION OF TIME - GRANTED			
44	11/10/2004	WORKFLOW INCOMING AMENDMENT IFW			
43	11/10/2004	WORKFLOW - REQUEST FOR RCE - BEGIN			
42	08/05/2004	MAIL MISCELLANEOUS COMMUNICATION TO APPLICANT			
41	08/05/2004	MISCELLANEOUS COMMUNICATION TO APPLICANT - NO ACTION COUNT			
40	06/10/2004	MAIL FINAL REJECTION (PTOL - 326)			
39	06/09/2004	FINAL REJECTION			

38	04/05/2004	CASE DOCKETED TO EXAMINER IN GAU			
37	03/18/2004	IFW TSS PROCESSING BY TECH CENTER COMPLETE			
36	03/18/2004	DATE FORWARDED TO EXAMINER			
35	03/05/2004	RESPONSE AFTER NON-FINAL ACTION		59	30
34	03/05/2004	REQUEST FOR EXTENSION OF TIME - GRANTED			
33	10/27/2003	CASE DOCKETED TO EXAMINER IN GAU			
32	10/22/2003	CASE DOCKETED TO EXAMINER IN GAU			
31	10/22/2003	CASE DOCKETED TO EXAMINER IN GAU			
30	10/06/2003	MAIL NON-FINAL REJECTION	294		-1
29	10/01/2003	NON-FINAL REJECTION			
28	07/30/2003	CORRESPONDENCE ADDRESS CHANGE			
27	07/30/2003	CHANGE IN POWER OF ATTORNEY (MAY INCLUDE ASSOCIATE POA)			
26.7	02/28/2002	INFORMATION DISCLOSURE STATEMENT (IDS) FILED			
26	02/28/2002	INFORMATION DISCLOSURE STATEMENT (IDS) FILED			
25	09/03/2002	PRELIMINARY AMENDMENT			
24	02/28/2002	PRELIMINARY AMENDMENT			
23	10/16/2001	PRELIMINARY AMENDMENT			
22.7	03/19/2002	INFORMATION DISCLOSURE STATEMENT (IDS) FILED			
22	03/19/2002	INFORMATION DISCLOSURE STATEMENT (IDS) FILED			
21	05/12/2003	CASE DOCKETED TO EXAMINER IN GAU			
19	09/03/2002	PRELIMINARY AMENDMENT			
18	03/19/2002	PRELIMINARY AMENDMENT			
17	02/28/2002	PRELIMINARY AMENDMENT			
16	10/16/2001	PRELIMINARY AMENDMENT			
15	11/21/2002	CORRESPONDENCE ADDRESS CHANGE			
14	08/25/2002	RECEIPT OF ALL ACKNOWLEDGEMENT LETTERS			
13	04/17/2002	CASE DOCKETED TO EXAMINER IN GAU			
12	04/12/2002	APPLICATION DISPATCHED FROM OIPE			
11	04/12/2002	APPLICATION IS NOW COMPLETE			
10	03/14/2002	ADDITIONAL APPLICATION FILING FEES			
9	03/14/2002	A SET OF SYMBOLS AND PROCEDURES, PROVIDED TO THE PTO ON A SET OF 3 ? INCH			

		DISKETTES IN COMPUTER READ			
8	04/09/2002	CRF IS GOOD TECHNICALLY / ENTERED INTO DATABASE			
7	01/02/2002	REFERRED BY L&R FOR THIRD-LEVEL SECURITY REVIEW. AGENCY REFERRAL LETTER GENERATED			
6	01/18/2002	SEQUENCE ERRORS			
4	12/20/2001	CRF IS FLAWED TECHNICALLY / NOT ENTERED INTO DATABASE			
3	10/25/2001	IFW SCAN & PACR AUTO SECURITY REVIEW			
2	10/16/2001	CRF DISK HAS BEEN RECEIVED BY PREEXAM / GROUP / PCT			
1	10/16/2001	INITIAL EXAM TEAM NN			

Search Another: Application# Search

EXPLANATION OF PTA CALCULATION

EXPLANATION OF PTE CALCULATION

To go back, right click here and select Back. To go forward, right click here and select Forward. To refresh, right click here and select Refresh.

Back to OASIS | Home page

UNITED STATES PATENT AND TRADEMARK OFFICE

Commissioner for Patents
United States Patent and Trademark Office
P.O. Box 1450
Alexandria, VA 22313-1450
www.uspto.gov

Paper No.

Arnold & Porter LLP (24126)
Attn: IP Docketing Dept.
555 Twelfth Street, N.W.
Washington DC 20004-1206

MAILED

MAR 30 2010

OFFICE OF PETITIONS

In re Patent No. 7,488,795	:	DECISION ON REQUEST
Goddard et al.	:	FOR
Issue Date: February 10, 2009	:	RECONSIDERATION OF
Application No. 09/978,681	:	PATENT TERM ADJUSTMENT
Filed: October 16, 2001	:	and
Atty Docket No. GNE.2630P1C18	:	NOTICE OF INTENT TO ISSUE
	:	CERTIFICATE OF CORRECTION

This is a decision on the petition filed on April 9, 2009, which is being treated as a petition under 37 CFR 1.705(d) requesting that the patent term adjustment indicated on the above-identified patent be corrected to indicate that the term of the above-identified patent is extended or adjusted by one hundred hundred seventy-nine (179) days.

The petition to correct the patent term adjustment indicated on the above-identified patent to indicate that the term of the above-identified patent is extended or adjusted by one hundred seventy-eight (178) days is **GRANTED to the extent indicated herein.**

As the period from the filing date of the request for continued examination (RCE) to the issue date of the patent is not included in the "B" delay period, the over three year period begins on October 17, 2004 and ends on November 9, 2004, the day before the RCE was filed, and is 24 (not 25) days. See 35 U.S.C. 154(b)(1)(B)(i). As such, the patent term adjustment is 178 (not 179) days.

The Office will *sua sponte* issue a certificate of correction. Pursuant to 37 CFR 1.322, the Office will not issue a certificate of correction without first providing assignee or patentee an opportunity to be heard. Accordingly, patentees are given **one (1) month or thirty (30) days**, whichever is longer, from the mail date of this decision to respond. No extensions of time will be granted under § 1.136.

The application is being forwarded to the Certificates of Branch for issuance of a certificate of correction. The Office will issue a certificate of correction indicating that the term of the above-identified patent is extended or adjusted by **one hundred seventy-eight (178)** days.

Telephone inquiries specific to this matter should be directed to the undersigned at (571) 272-3219.

Nancy Johnson
Senior Petitions Attorney
Office of Petitions

Enclosure: Copy of DRAFT Certificate of Correction

UNITED STATES PATENT AND TRADEMARK OFFICE

CERTIFICATE OF CORRECTION

PATENT : 7,488,795 B2

DATED : **February 10, 2009** **DRAFT**

INVENTOR(S) : Goddard et al.

It is certified that error appears in the above-identified patent and that said Letters Patent is hereby
corrected as shown below:

On the cover page,

[*] Notice: Subject to any disclaimer, the term of this patent is extended or adjusted under 35 USC 154(b) by 154 days

Delete the phrase "by 154 days" and insert – by 178 days--

UNITED STATES PATENT AND TRADEMARK OFFICE

Commissioner for Patents
United States Patent and Trademark Office
P.O. Box 1450
Alexandria, VA 22313-1450
www.uspto.gov
DIW 08-04

BIRCH STEWART KOLASCH & BIRCH
PO BOX 747
FALLS CHURCH VA 22040-0747

COPY MAILED
JUN 01 2004
OFFICE OF PETITIONS

In re Application of	:	
Yasutaka Shimokawatoko	:	
Application No. 09/978,709	:	ON PETITION
Filed: 18 October, 2001	:	
Attorney Docket No. 2185-0582P	:	

This is a decision on the petition under 37 CFR 1.183 filed on 19 March, 2004, to correct assignment data on Form PTOL-85(b)17 November, 2003, which is treated as a petition to waive the rules and correct the assignment data on Form PTOL-85(b).

The petition is **GRANTED**.

The requested data will be printed on the patent if this can be accomplished without substantial disruption to the issue process. However, if the printing of the patent has progressed to the point where the requested data cannot be included in the printed patent, petitioners can request a Certificate of Correction under 37 CFR 1.322.

The petition fee of $130.00 will be charged to counsel's deposit account, No. 02-2448.

The application is being forwarded to the Publishing Division to be processed into a patent.

Telephone inquiries concerning this matter may be directed to the undersigned at 703-308-6918.

DWood

Douglas I. Wood
Senior Petitions Attorney
Office of Petitions

JUL 25 2007

UNITED STATES PATENT AND TRADEMARK OFFICE

Commissioner for Patents
United States Patent and Trademark Office
P.O. Box 1450
Alexandria, VA 22313-1450
www.uspto.gov

HEAD, JOHNSON & KACHIGIAN
228 W 17TH PLACE
TULSA OK 74119

In re Patent No. 6,887,714 FRITSCH ET AL	
Issue Date: May 3, 2005	**DECISION GRANTING**
Appl No.: 09/978,734	**PETITION**
Filed: October 15, 2001	*37 CFR 1.324*
For: Correction of Inventorship	

This is a decision on the petition filed March17, 2006, to correct inventorship under 37 CFR 1.324.

The petition is **GRANTED**.

The patented file is being forwarded to Certificate of Corrections Branch for issuance of a certificate naming only the actual inventor or inventors.

William R. Dixon, Jr.
Special Program Examiner
Technology Center 1600

JUL 25 2007

UNITED STATES PATENT AND TRADEMARK OFFICE

Commissioner for Patents
United States Patent and Trademark Office
P.O. Box 1450
Alexandria, VA 22313-1450
www.uspto.gov

HEAD, JOHNSON & KACHIGIAN
228 W 17TH PLACE
TULSA OK 74119

In re Patent No. 6,887,714 FRITSCH ET AL	
Issue Date: May 3, 2005	**DECISION GRANTING**
Appl No.: 09/978,734	**PETITION**
Filed: October 15, 2001	*37 CFR 1.324*
For: Correction of Inventorship	

This is a decision on the petition filed March17, 2006, to correct inventorship under 37 CFR 1.324.

The petition is **GRANTED**.

The patented file is being forwarded to Certificate of Corrections Branch for issuance of a certificate naming only the actual inventor or inventors.

William R. Dixon, Jr.
Special Program Examiner
Technology Center 1600

JUL 25 2007

UNITED STATES PATENT AND TRADEMARK OFFICE

Commissioner for Patents
United States Patent and Trademark Office
P.O. Box 1450
Alexandria, VA 22313-1450
www.uspto.gov

DATE: July 24, 2007
TO: Certificates of Correction Branch
FROM: William R. Dixon, Jr.
Technology Center 1600
SUBJECT: REQUEST FOR CERTIFICATE OF CORRECTION

Please issue a Certificate of Correction in U. S. Letters Patent No. 6,887,714 as specified on the attached Certificate.

William R. Dixon, Jr.
Technology Center 1600

JUL 25 2007

UNITED STATES PATENT AND TRADEMARK OFFICE

CERTIFICATE

Patent No. 6,887,714
Patented: May 3, 2005

On petition requesting issuance of a certificate for correction of inventorship pursuant to 35 U.S.C. 256, it has been found that the above identified patent, through error and without deceptive intent, improperly sets forth the inventorship. Accordingly, it is hereby certified that the correct inventorship of this patent is:

Ingrid Fritsch
Robert Beitle, Jr
Zoraida Aguuilar

William R. Dixon, Jr.
Special Program Examiner
Technology Center 1600

UNITED STATES PATENT AND TRADEMARK OFFICE

COMMISSIONER FOR PATENTS
UNITED STATES PATENT AND TRADEMARK OFFICE
P.O. BOX 1450
ALEXANDRIA, VA 22313-1450
www.uspto.gov

Paper No. 6

LAWRENCE HARBIN
MCINTYRE HARBIN & KING LLP
500 9TH STREET, S.E.
WASHINGTON DC 20003

COPY MAILED

DEC 03 2003

OFFICE OF PETITIONS

In re Application of :
Richley, et al.
Application No.: 09/978,750 : ON PETITION
Filed: October 18, 2001 :
Attorney Docket No: MHK-029-010 :

This is in response to the petition under 37 CFR 1.137(b) filed November 20, 2003.

The petition under 37 CFR 1.137(b) is **granted**.

On November 20, 2001, a "Notice to File Corrected Application Papers"(the "Notice") was mailed by the Office allowing a two-month period for reply. The Notice required substitute drawings to be filed. Extensions of time were available pursuant to 37 CFR 1.136(a). No response was noted as being received within in the allowable period and the application became abandoned on January 21, 2002. A Notice of Abandonment was mailed on November 6, 2003.

The substitute drawings filed November 20, 2003, are noted and made of record.

This application is being forwarded to the Office of Initial Patent Examination for further processing.

Telephone inquiries regarding this decision should be directed to the undersigned at (703) 305-0010.

Kenya A. McLaughlin
Petitions Attorney
Office of Petitions

UNITED STATES PATENT AND TRADEMARK OFFICE

UNITED STATES DEPARTMENT OF COMMERCE
United States Patent and Trademark Office
Address: COMMISSIONER FOR PATENTS
P.O. Box 1450
Alexandria, Virginia 22313-1450
www.uspto.gov

North Star Intellectual Property Law, PC
P.O. Box 34688
Washington, DC 20043

Mail Date: 04/21/2010

Applicant	: Hyun-kwon Chung	: DECISION ON REQUEST FOR
Patent Number	: 7577333	: RECALCULATION of PATENT
Issue Date	: 08/18/2009	: TERM ADJUSTMENT IN VIEW
Appliction No	: 09/978,771	: OF WYETH
Filed	: 10/18/2001	:
		:

The Patentee's Request for Recalculation is **DISMISSED.**

This Request is deemed ineligible for consideration for one or more of the following reasons:

(A). The patent for which PTA recalculation is requested is either a design or reissue application or is a reexamination proceeding;

(B). The patent for which PTA recalculation is requested resulted from a utility or plant application filed under 35 USC 111(a) before May 29, 2000 and no CPA filed in the application on/after May 29, 2000;

(C). The patent for which PTA recalculation is requested resulted from an international application in which the international filing date was before May 29, 2000 and no CPA filed in the application on/after May 29, 2000;

(D). The patent for which PTA recalculation is requested issued on/after March 2, 2010;

(E). The Request for Recalculation was filed more than 180 days after the grant date of the patent and the request was not filed within two months of a dismissal of a request for reconsideration of the of the patent term under 37 CFR 1.705(d);

(F). The Request for Recalculation is not solely limited to USPTO pre-Wyeth interpretation of 35 U.S.C. 154(b)(2)(A);

or

(G). A civil action was filed pursuant to 35 U.S.C. 154(b)(4)(A)concerning the same patent at issue in this request.

Patentee may file a reply to this decision dismissing the Request for Recalculation. Patentee must file such reply within one month or thirty days, whichever is longer, of the mail date of the decision dismissing the Request for Recalculation. No fee is required if patentee is asserting in the reply that the dismissal for ineligibility is improper.

Patentee should use document code PET.OP if electronically filing a reply to this dismissal. If the USPTO finds that the request was improperly deemed ineligible, the USPTO will mail applicant a recalculation determination.

Patentee should be aware that in order to preserve the right to review in the United States District Court for the District of Columbia of the USPTO patent term adjustment determination, patentee must ensure that he or she also take the steps required under 35 U.S.C. 154(b)(4)(A). Nothing in the request for recalculation should be construed as providing an alternative time frame for commencing a civil action under 35 U.S.C. 154 (b)(4)(A).

Any questions concerning this decision should be directed to the Office of Patent Legal Administration at 571-272-7702.

UNITED STATES PATENT AND TRADEMARK OFFICE

Commissioner for Patents
United States Patent and Trademark Office
P.O. Box 1450
Alexandria, VA 22313-1450
www.uspto.gov

Paper No. 13

ARENT, FOX, KINTNER, PLOTKIN & KAHN, PLLC
Suite 400
1050 Connecticut Avenue, N.W.
Washington, DC 20036-5339

COPY MAILED

OCT 13 2004

OFFICE OF PETITIONS

In re Application of	:	
James Benjamin Huntley	:	
Application No. 09/978,790	:	ON PETITION
Filed: October 18, 2001	:	
Attorney Docket No. 108191-00001	:	

This is a decision on the petition under 37 CFR 1.137(b), filed July 19, 2004, to revive the above-identified application.

The above-identified application became abandoned for failure to reply in a timely manner to the non-final Office action mailed September 17, 2003, which set a shortened statutory period for reply of three (3) months. No extensions of time under the provisions of 37 CFR 1.136(a) were obtained. Accordingly, the above-identified application became abandoned after midnight December 17, 2003.

In response, petitioner submitted with the instant petition $665 for the petition to revive fee and an amendment.

The petition is **GRANTED**.

The application file is being forwarded to Technology Center Art Unit 1616 for further review of the amendment filed with the instant petition.

Telephone inquiries concerning this decision should be directed to the undersigned at (571) 272-3226.

Andrea Smith
Petitions Examiner
Office of Petitions
Office of the Deputy Commissioner
for Patent Examination Policy

UNITED STATES PATENT AND TRADEMARK OFFICE

Commissioner for Patents
United States Patent and Trademark Office
P.O. Box 1450
Alexandria, VA 22313-1450
www.uspto.gov

TEXAS INSTRUMENTS
INCORPORATED
P O BOX 655474, M/S 3999
DALLAS, TX 75265

COPY MAILED

MAY 17 2006

OFFICE OF PETITIONS

In re Patent of	:	
Dabak et al.	:	
Application No. 09/978,811	:	DECISION
Filed: October 15, 2001	:	ON PETITION
Attorney Docket Number:	:	
TI-32118	:	

This is a decision in response to the Petition Under 37 CFR § 1.137(b), filed March 10, 2006, to revive the above-identified application.

This Petition is hereby **granted**.

The above-identified application became abandoned for failure to timely and properly reply to the non-final Office action, mailed August 16, 2005. The Office action set a three (3) month period for reply. No extensions of time having been obtained under 37 CFR 1.136(a), this application became abandoned on November 17, 2005. The mailing of this Decision precedes the mailing of a Notice of Abandonment.

With the instant petition, Petitioner has satisfied the requirements of a grantable petition under 37 CFR 1.137(b). A response to the Office action is filed with the instant petition. Accordingly, the petition is granted.

This application is being referred to Technology Center Art Unit 2667 for processing of the Amendment filed with the petition in due course.

Telephone inquiries concerning this matter should be directed to the undersigned at (571) 272-3232.

Derek L. Woods
Attorney
Office of Petitions

UNITED STATES PATENT AND TRADEMARK OFFICE

Commissioner for Patents
United States Patent and Trademark Office
P.O. Box 1450
Alexandria, VA 22313-1450
www.uspto.gov
DIW May-07

TEXAS INSTRUMENTS INCORPORATED
P O BOX 655474, M/S 3999
DALLAS TX 75265

COPY MAILED

MAY 17 2007

OFFICE OF PETITIONS

In re Application of	:	
Dabak et al.	:	
Application No. 09/978,811	:	DECISION ON PETITION
Filed: 15 October, 2001	:	
Attorney Docket No. TI-32118	:	

This is a decision on the petition filed on 6 March, 2007, under 37 CFR 1.137(b),[1] to revive the above-identified application.

The petition is **GRANTED**.

The application became abandoned on 2 November, 2006, for failure to timely respond to the non-final Office action mailed on 1 August, 2006, which set a three (3) month shortened statutory period for reply. No extensions of time in accordance with 37 CFR 1.136(a) were obtained. Notice of Abandonment was mailed on 27 February, 2007.

Petitioners have filed an amendment as the required reply.

---

[1] Effective December 1, 1997, the provisions of 37 CFR 1.137(b) now provide that where the delay in reply was unintentional, a petition may be filed to revive an abandoned application or a lapsed patent pursuant to 37 CFR 1.137(b). A grantable petition filed under the provisions of 37 CFR 1.137(b) must be accompanied by:

(1) the required reply, unless previously filed. In a nonprovisional application abandoned for failure to prosecute, the required reply may be met by the filing of a continuing application. In a nonprovisional utility or plant application filed on or after June 8, 1995, and abandoned for failure to prosecute, the required reply may also be met by the filing of a request for continuing examination in compliance with § 1.114. In an application or patent, abandoned or lapsed for failure to pay the issue fee or any portion thereof, the required reply must be the payment of the issue fee or any outstanding balance thereof. In an application, abandoned for failure to pay the publication fee, the required reply must include payment of the publication fee.

(2) the petition fee as set forth in 37 CFR 1.17(m);

(3) a statement that the entire delay in filing the required reply from the due date for the reply until the filing of a grantable petition pursuant to 37 CFR 1.137(b) was unintentional. The Commissioner may required additional information where there is a question whether the delay was unintentional; and

(4) any terminal disclaimer (and fee as set forth in 37 CFR 1.20(d)) required pursuant to 37 CFR 1.137(c)).

This application is being referred to Technology Center Art Unit 2616 for further processing.

Telephone inquiries concerning this matter may be directed to the undersigned at (571)272-3231.

D Wood

Douglas I. Wood
Senior Petitions Attorney
Office of Petitions

UNITED STATES PATENT AND TRADEMARK OFFICE

Commissioner for Patents
United States Patent and Trademark Office
P.O. Box 1450
Alexandria, VA 22313-1450
www.uspto.gov

TEXAS INSTRUMENTS INCORPORATED
P O BOX 655474, M/S 3999
DALLAS TX 75265

MAILED

NOV 25 2009

OFFICE OF PETITIONS

In re Application of	:	
Dabak et al.	:	
Application No. 09/978,811	:	DECISION ON PETITION
Filed: October 15, 2001	:	
Attorney Docket No. TI-32118	:	

This is a decision on the petition under the unintentional provisions of 37 CFR 1.137(b), filed May 13, 2008, to revive the above-identified application.

The petition is **GRANTED**.

This application became abandoned as a result of petitioner's failure to file an appeal brief (and fee required by 37 CFR 41.20(b)(2)) within the time period provided in 37 CFR 41.37(a)(1). As an appeal brief (and appeal brief fee) was not filed within two (2) months of the Notice of Appeal filed November 5, 2007, and no extensions of time under the provisions of 37 CFR 1.136(a) were obtained, the appeal was dismissed and the proceedings as to the rejected claims were terminated. See 37 CFR 1.197(b). As no claim was allowed, the application became abandoned on January 6, 2008. *See* MPEP 1215.04. A Notice of Abandonment was mailed August 20, 2008.

The petition satisfies the requirements of 37 CFR 1.137(b) in that petitioner has supplied (1) the reply in the form of an Appeal Brief and fee of $510.00 (; (2) the petition fee of $1,540.00; and (3) a proper statement of unintentional delay.

Additionally, 37 CFR 1.137(b)(3) requires a statement that the entire delay in filing the required reply from the due date for the reply until the filing of a grantable petition pursuant to 37 CFR 1.137(b) was unintentional. If the statement contained in the instant petition varies from the language required by 37 CFR 1.137(b)(3), the statement contained in the instant petition is being construed as the statement required by 37 CFR 1.137(b)(3) and petitioner must notify the Office if this is **not** a correct interpretation of the statement contained in the instant petition.

Further, the address given on the petition differs from the address of record. A courtesy copy of this decision is being mailed to the address given on the petition; however, the Office will mail all future correspondence solely to the address of record.

This application is being referred to Technology Center AU 2616 for appropriate action by the Examiner in the normal course of business on the reply received.

Telephone inquiries concerning this decision should be directed to the undersigned at (571) 272-7751.

Joan Olszewski

Joan Olszewski
Petitions Examiner
Office of Petitions

cc: Robert N. Rountree, LLC
70360 Highway 69
Cotopaxi, CO 81223

UNITED STATES PATENT AND TRADEMARK OFFICE

Commissioner for Patents
United States Patent and Trademark Office
P.O. Box 1450
Alexandria, VA 22313-1450
www.uspto.gov

Bracewell & Giuliani, LLP
P.O. Box 61389
Houston, TX 77208-1389

COPY MAILED

JUN 0 6 2008

OFFICE OF PETITIONS

In re Application of :
Robert W. Vanderwiel :
Application No. 09/978,817 : DECISION ON PETITION
Filed: October 15, 2001 :
Attorney Docket No. TA-00464 :

This is a decision on the petition under 37 CFR 1.137(b), filed November 14, 2007, to revive the above-identified application.

The petition is **GRANTED**.

This application became abandoned for failure to timely pay the issue and publication fees on or before November 1, 2006, as required by the Notice of Allowance and Fee(s) Due, mailed August 1, 2006. Accordingly, the date of abandonment of this application is November 2, 2006. A Notice of Abandonment was mailed on November 28, 2006.

The petition satisfies the requirements of 37 CFR 1.137(b) in that petitioner has supplied (1) the reply in the form of payment of the issue fee of $1440 and the publication fee of $300, (2) the petition fee of $1540, and (3) a proper statement of unintentional delay. Accordingly, the issue and publication fees are accepted as being unintentionally delayed.

It is not apparent whether the person signing the statement of unintentional delay was in a position to have firsthand or direct knowledge of the facts and circumstances of the delay at issue. Nevertheless, such statement is being treated as having been made as the result of a reasonable inquiry into the facts and circumstances of such delay. See 37 CFR 10.18(b) and Changes to Patent Practice and Procedure; Final Rule Notice, 62 Fed. Reg. 53131, 53178 (October 10, 1997), 1203 Off. Gaz. Pat. Office 63, 103 (October 21, 1997). In the event that such an inquiry has not been made, petitioner must make such an inquiry. If such inquiry results in the discovery that it is not correct that the entire delay in filing the required reply from the due date for the reply until the filing of a grantable petition pursuant to 37 CFR 1.137(b) was unintentional, petitioner must notify the Office.

37 CFR 1.137(b)(3) requires a statement that the entire delay in filing the required reply from the due date for the reply until the filing of a grantable petition pursuant to 37 CFR 1.137(b) was unintentional. Since the statement contained in the petition varies from the language required by 37 CFR 1.137(b)(3), the statement contained in the petition is being construed as the statement required by 37 CFR 1.137(b)(3). Petitioner must notify the Office if this is **not** a correct interpretation of the statement contained in the petition.

Telephone inquiries concerning this decision should be directed to Kimberly Inabinet at (571) 272-4618.

This application is being referred to the Office of Data Management for further processing into a patent.

Andrea Smith
Petitions Examiner
Office of Petitions

UNITED STATES PATENT AND TRADEMARK OFFICE

COMMISSIONER FOR PATENTS
UNITED STATES PATENT AND TRADEMARK OFFICE
P.O. BOX 1450
ALEXANDRIA, VA 22313-1450
www.uspto.gov

COPY MAILED

FEB 28 2005

OFFICE OF PETITIONS

HELLER EHRMAN WHITE & MCAULIFFE LLP
275 MIDDLEFIELD ROAD
MENLO PARK CO 94025-3506

In re Application of :
Avi J. Ashkenazi, et al. :
Application No. 09/978,824 : DECISION GRANTING PETITION
Filed: October 16, 2001 :
Attorney Docket No. P2630P1C14 :

This is a decision on the petition filed December 10, 2004, requesting that the above-identified application be accorded a filing date of November 14, 2003, instead of the presently accorded date of November 17, 2003.

Petitioner alleges that the application was deposited in "Express Mail" Service with the U. S. Postal Service (USPS) on October 16, 2001. In support, petitioner provides, *inter alia*, a copy of the "Express Mail" mailing label receipt No. EV 89332493 US. The same Express Mail receipt number was referred to in the original application transmittal letter found in the file.

The Office considers the date the paper or fee is shown to have been deposited as "Express Mail" to be the "Date In" on the Express Mail label, MPEP 513. That is the date that verifies that the package was actually mailed. The evidence is convincing that the application was deposited as "Express Mail" with the USPS on October 16, 2001.

The petition is granted.

The application is being referred to the Office of Initial Patent Examination (OIPE) for correction of the filing date to **October 16, 2001**.

Telephone inquires related to this decision should be directed to the undersigned at (571) 272-3204. Telephone inquiries related to OIPE processing should be directed to their hotline at (703) 308-1202.

Sherry D. Brinkley
Petitions Examiner
Office of Petitions
Office of the Deputy Commissioner
for Patent Examination Policy

UNITED STATES PATENT AND TRADEMARK OFFICE

COMMISSIONER FOR PATENTS
UNITED STATES PATENT AND TRADEMARK OFFICE
WASHINGTON, D.C. 20231
www.uspto.gov

JJGJr.:07-02

Paper 7

JEFFREY R. RAMBERG
M CUBED TECHNOLOGIES, INC.
ONE TRALEE INDUSTRIAL PARK
NEWARK DE 19711

COPY MAILED

JUL 1 5 2002

OFFICE OF PETITIONS

In re Application of
Andersson et al,
Application No. 09/978,827
Filed: 17 October, 2001
Attorney Docket No. M-108-B

DECISION ON PETITION

This is a decision on the petition under 37 C.F.R. §1.47(a),[1] filed on 25 March, 2002, and supplemented via FAX on 8 July, 2002, Petitioner has shown that, while inventor Clarence Anderson has signed the oath/declaration, the non-signing inventor **Philip J. Roach** has refused to join in the filing of the above-identified application after having been presented with the application papers.

Specifically, the declarations/statements/submission of facts of/by Jeffrey R. Ramberg (Registration No. 34,700) establish that the non-signing inventor was mailed the application papers, including the specification, claims and drawings, but failed to respond positively to the request that they sign the declaration or in fact sign said declaration.

Lastly, Petitioner has submitted a declaration in compliance with 37 C.F.R. §1.63 and §1.64 and petitioner has shown that such action is necessary to prevent irreparable damage.

This application and papers have been reviewed and found in compliance with 37 C.F.R. §1.47(a).

This application hereby is **ACCORDED status under 37 C.F.R. §1.47(a)**.

As provided under 37 C.F.R. §1.47(a), the Office will forward notice of this application's filing to the non-signing inventor at the address given in the petition.

Notice of the filing of this application also will be published in the Official Gazette.

This file is being forwarded to OIPE for processing and then to Technology Center 1700 for examination.

---

[1] The regulations at 37 C.F.R. §1.47 provide:

§ 1.47 Filing when an inventor refuses to sign or cannot be reached.

(a) If a joint inventor refuses to join in an application for patent or cannot be found or reached after diligent effort, the application may be made by the other inventor on behalf of himself or herself and the nonsigning inventor. The oath or declaration in such an application must be accompanied by a petition including proof of the pertinent facts, the fee set forth in §1.17(h), and the last known address of the nonsigning inventor. The nonsigning inventor may subsequently join in the application by filing an oath or declaration complying with §1.63.

(b) Whenever all of the inventors refuse to execute an application for patent, or cannot be found or reached after diligent effort, a person to whom an inventor has assigned or agreed in writing to assign the invention, or who otherwise shows sufficient proprietary interest in the matter justifying such action, may make application for patent on behalf of and as agent for all the inventors. The oath or declaration in such an application must be accompanied by a petition including proof of the pertinent facts, a showing that such action is necessary to preserve the rights of the parties or to prevent irreparable damage, the fee set forth in §1.17(h), and the last known address of all of the inventors. An inventor may subsequently join in the application by filing an oath or declaration complying with §1.63.

(c) The Office will send notice of the filing of the application to all inventors who have not joined in the application at the address(es) provided in the petition under this section, and publish notice of the filing of the application in the *Official Gazette*. The Office may dispense with this notice provision in a continuation or divisional application, if notice regarding the filing of the prior application was given to the nonsigning inventor(s).

[47 Fed. Reg. 41275, Sept. 17, 1982, effective Oct. 1, 1982; 48 Fed. Reg. 2709, Jan. 20, 1983, effective Feb. 27, 1983; revised, 62 Fed. Reg. 53131, Oct. 10, 1997, effective Dec. 1, 1997; revised, 65 Fed. Reg. 54604, Sept. 8, 2000, effective Nov. 7, 2000]

Telephone inquiries concerning this decision may be directed to the undersigned at (703) 305-9199.

John J. Gillon, Jr.
Senior Attorney
Office of Petitions
Office of the Deputy Commissioner
for Patent Examination Policy

UNITED STATES PATENT AND TRADEMARK OFFICE

COMMISSIONER FOR PATENTS
UNITED STATES PATENT AND TRADEMARK OFFICE
WASHINGTON, D.C. 20231
www.uspto.gov

JJGJr.:07-02

Paper 8

PHILIP J. ROACH
184 MORRIS ROAD
TOWNSEND, DE 19734

COPY MAILED

JUL 1 5 2002

OFFICE OF PETITIONS

In re Application of
Andersson et al,
Application No. 09/978,827
Filed: 17 October, 2001
Attorney Docket No. M-108-B

: LETTER

Dear Philip J. Roach:

You are named as inventor in the above-identified United States patent application, filed under the provisions of 35 U.S.C. §116 (United States Code), and 37 C.F.R. §1.47,[1] ¶a, Rules of Practice in Patent Cases.

Should a patent be granted on the application you will be designated therein as inventor.

As a named inventor you are entitled to inspect any paper in the file wrapper of the application, order copies of all or any part thereof (at a prepaid cost per 37 C.F.R. §1.19) or make your position of record in the application.

Alternatively, you may arrange to do any of the preceding through a registered patent attorney or agent presenting written authorization from you. If you care to join the application, counsel of record (see below) would presumably assist you. Joining in the application would entail the filing of an appropriate oath or declaration by you pursuant to 37 C.F.R. §1.63.

Requests for information regarding your application should be directed to the File Information Unit at (703) 308-2733.

Information regarding how to pay for and order a copy of the application, or a specific paper in the application, should be directed to Certification Division at (703) 308-9726 or toll-free: (800) 972-6382 (outside the Washington D.C. area).

---

[1] The regulations at 37 C.F.R. §1.47 provide:

§ 1.47 Filing when an inventor refuses to sign or cannot be reached.

(a) If a joint inventor refuses to join in an application for patent or cannot be found or reached after diligent effort, the application may be made by the other inventor on behalf of himself or herself and the nonsigning inventor. The oath or declaration in such an application must be accompanied by a petition including proof of the pertinent facts, the fee set forth in §1.17(h), and the last known address of the nonsigning inventor. The nonsigning inventor may subsequently join in the application by filing an oath or declaration complying with §1.63.

(b) Whenever all of the inventors refuse to execute an application for patent, or cannot be found or reached after diligent effort, a person to whom an inventor has assigned or agreed in writing to assign the invention, or who otherwise shows sufficient proprietary interest in the matter justifying such action, may make application for patent on behalf of and as agent for all the inventors. The oath or declaration in such an application must be accompanied by a petition including proof of the pertinent facts, a showing that such action is necessary to preserve the rights of the parties or to prevent irreparable damage, the fee set forth in §1.17(h), and the last known address of all of the inventors. An inventor may subsequently join in the application by filing an oath or declaration complying with §1.63.

(c) The Office will send notice of the filing of the application to all inventors who have not joined in the application at the address(es) provided in the petition under this section, and publish notice of the filing of the application in the *Official Gazette*. The Office may dispense with this notice provision in a continuation or divisional application, if notice regarding the filing of the prior application was given to the nonsigning inventor(s).

[47 Fed. Reg. 41275, Sept. 17, 1982, effective Oct. 1, 1982; 48 Fed. Reg. 2709, Jan. 20, 1983, effective Feb. 27, 1983; revised, 62 Fed. Reg. 53131, Oct. 10, 1997, effective Dec. 1, 1997; revised, 65 Fed. Reg. 54604, Sept. 8, 2000, effective Nov. 7, 2000]

Telephone inquiries concerning this letter may be directed to the undersigned at (703) 305-9199.

John J. Gillon, Jr.
Senior Attorney
Office of Petitions
Office of the Deputy Commissioner
for Patent Examination Policy

Counsel of Record:

JEFFREY R. RAMBERG
M CUBED TECHNOLOGIES, INC.
ONE TRALEE INDUSTRIAL PARK
NEWARK DE 19711

UNITED STATES PATENT AND TRADEMARK OFFICE

Commissioner for Patents
United States Patent and Trademark Office
P.O. Box 1450
Alexandria, VA 22313-1450
www.uspto.gov

Paper No. 7

Meyertons Hood Kivlin Kowert & Goetzel
PO Box 398
Austin, TX 78767-0398

COPY MAILED
JAN 07 2004
OFFICE OF PETITIONS

In re Application of	:	
Masanori Futai	:	
Application No. 09/978,829	:	ON PETITION
Filed: October 15, 2001	:	
Attorney Docket No. 5682-00200	:	

This is a decision on the petition under 37 CFR 1.137(b), filed December 23, 2003, to revive the above-identified application.

The petition is granted.

The above-identified application became abandoned for failure to reply in a timely manner to the Notice to File Missing Parts of Application (Notice) mailed November 21, 2001. The Notice set a period for reply of two (2) months from the mail date of the Notice. No extensions of time under the provisions of 37 CFR 1.136(a) were obtained. Accordingly, the above-identified application became abandoned on January 22, 2002.

The application file is being forwarded to the Office of Initial Patent Examination Division for further processing.

Telephone inquiries concerning this decision should be directed to Latrice Bond at (703) 308-6911.

Latrice Bond

Latrice Bond
Petitions Examiner
Office of Petitions
Office of the Deputy Commissioner
for Patent Examination Policy

UNITED STATES PATENT AND TRADEMARK OFFICE

Commissioner for Patents
United States Patent and Trademark Office
P.O. Box 1450
Alexandria, VA 22313-1450
www.uspto.gov

LADAS & PARRY
26 WEST 61 STREET
NEW YORK NY 10023

COPY MAILED

FEB 2 1 2008

OFFICE OF PETITIONS

In re Patent No. 6,892,358 :
Issued: May 10, 2005 :
Application No. 09/978,843 : ON PETITION
Filed: October 17, 2001 :
Attorney Docket Number: U 013674-6 :

This is a decision on the petition filed October 19, 2005 and supplemented February 13, 2006, under 37 CFR 3.81(b)[1], to correct the assignee's name on the front of the Patent.

The petition is **GRANTED**.

Petitioner states that the failure to include the correct name and address of the assignee on the Fee(s) Transmittal form PTOL-85(b) filed April 4, 2005 was inadvertent. Accordingly, petitioner requests that a certificate of correction be issued to reflect the correct name and address of the assignee on the front page of the Letters Patent.

37 CFR 3.81(b), effective June 25, 2004, reads:

> *After payment of the issue fee:* Any request for issuance of an application in the name of the assignee submitted after the date of payment of the issue fee, and any request for a patent to be corrected to state the name of the assignee, must state that the assignment was submitted for recordation as set forth in § 3.11 before issuance of the patent, and must include a request for a certificate of correction under § 1.323 of this chapter (accompanied by the fee set forth in § 1.20(a) and the processing fee set forth in § 1.17(i) of this chapter.

Office assignment records however, reflect that G.D SOCIETA 'PER AZIONI, BOLOGNA, ITALY is the assignee of record. Accordingly, as the request complies with the provisions of 37 CFR 3.81(b), it would be appropriate for a certificate of correction to issue.

---

[1] *See* Official Gazette of June 22, 2004

The petition fee in the amount of $130.00 and the fee for the certificate of correction in the amount of $100.00 have been applied.

Inquiries concerning this decision should be directed to the undersigned at (571) 272-3212. Any questions concerning the issuance of a certificate of correction should be directed to the Certificates of Correction Branch at (703) 305-8309.

This file is being referred to the Certificates of Correction Branch for issuance of a certificate of correction.

Patricia Faison-Ball

Patricia Faison-Ball
Senior Petitions Attorney
Office of Petitions

Under the Paperwork Reduction Act of 1995, no persons are required to respond to a collection of information unless it displays valid OMB control number.

PETITION TO ACCEPT UNINTENTIONALLY DELAYED PAYMENT OF MAINTENANCE FEE IN AN EXPIRED PATENT (37 CFR 1.378(c))

Patent Number	Issue Date (YYYY-MM-DD)	Application Number	Filing Date (YYYY-MM-DD)	Docket Number (if applicable)
6656380	2003-12-02	09978851	2001-10-16	24963-0015

CAUTION: Maintenance fee (and surcharge, if any) payment must correctly identify: (1) the patent number and (2) the application number of the actual U.S. application leading to issuance of that patent to ensure the fee(s) is/are associated with the correct patent. 37 CFR 1.366(c) and (d).

SMALL ENTITY
☐ Patentee claims, or has previously claimed, small entity status. See 37 CFR 1.27.

LOSS OF ENTITLEMENT TO SMALL ENTITY STATUS
☐ Patentee is no longer entitled to small entity status. See 37 CFR 1.27(g)

NOT Small Entity		Small Entity	
Fee	Code	Fee	Code
◉ 3 ½ year	(1551)	○ 3 ½ year	(2551)
○ 7 ½ year	(1552)	○ 7 ½ year	(2552)
○ 11 ½ year	(1553)	○ 11 ½ year	(2553)

SURCHARGE
The surcharge required by 37 CFR 1.20(i)(2) (Fee Code 1558) must be paid as a condition of accepting unintentionally delayed payment of the maintenance fee.

MAINTENANCE FEE (37 CFR 1.20(e)-(g))
The appropriate maintenance fee must be submitted with this petition.

STATEMENT
THE UNDERSIGNED CERTIFIES THAT THE DELAY IN PAYMENT OF THE MAINTENANCE FEE TO THIS PATENT WAS UNINTENTIONAL

PETITIONER(S) REQUEST THAT THE DELAYED PAYMENT OF THE MAINTENANCE FEE BE ACCEPTED AND THE PATENT REINSTATED

THIS PORTION MUST BE COMPLETED BY THE SIGNATORY OR SIGNATORIES

37 CFR 1.378(d) states: "Any petition under this section must be signed by an attorney or agent registered to practice before the Patent and Trademark Office, or by the patentee, the assignee, or other party in interest."

I certify, in accordance with 37 CFR 1.4(d)(4) that I am

◉ An attorney or agent registered to practice before the Patent and Trademark Office

○ A sole patentee

○ A joint patentee; I certify that I am authorized to sign this submission on behalf of all the other patentees.

○ A joint patentee; all of whom are signing this e-petition

○ The assignee of record of the entire interest

Patent Practitioner			
A signature of the applicant or representative is required in accordance with 37 CFR 1.33 and 10.18. Please see 37 CFR 1.4(d) for the form of the signature			
Signature	/Kevin W. King/	Date (YYYY-MM-DD)	2008-01-24
Name	Kevin W. King	Registration Number	42737

This collection of information is required by 37 CFR 1.378(c). The information is required to obtain or retain a benefit by the public which is to file (and by the USPTO to process) an application. Confidentiality is governed by 35 U.S.C. 122 and 37 CFR 1.11 and 1.14. This collection is estimated to take 1 hour to complete, including gathering, preparing, and submitting the completed application form to the USPTO. Time will vary depending upon the individual case. Any comments on the amount of time you require to complete this form and/ or suggestions for reducing this burden, should be sent to the Chief Information Officer, U.S. Patent and Trademark Office, U.S. Department of Commerce, P.O. Box 1450, Alexandria, VA 22313-1450. DO NOT SEND FEES OR COMPLETED FORMS TO THIS ADDRESS. **This form can only be used when in conjunction with EFS-Web. If this form is mailed to the USPTO, it may cause delays in reinstating the patent.**

Privacy Act Statement

The Privacy Act of 1974 (P.L. 93-579) requires that you be given certain information in connection with your submission of the attached form related to a patent application or patent. Accordingly, pursuant to the requirements of the Act, please be advised that: (1) the general authority for the collection of this information is 35 U.S.C. 2(b)(2); (2) furnishing of the information solicited is voluntary; and (3) the principal purpose for which the information is used by the U.S. Patent and Trademark Office is to process and/or examine your submission related to a patent application or patent. If you do not furnish the requested information, the U.S. Patent and Trademark Office may not be able to process and/or examine your submission, which may result in termination of proceedings or abandonment of the application or expiration of the patent.

The information provided by you in this form will be subject to the following routine uses:

1. The information on this form will be treated confidentially to the extent allowed under the Freedom of Information Act (5 U.S.C. 552) and the Privacy Act (5 U.S.C. 552a). Records from this system of records may be disclosed to the Department of Justice to determine whether the Freedom of Information Act requires disclosure of these record s.

2. A record from this system of records may be disclosed, as a routine use, in the course of presenting evidence to a court, magistrate, or administrative tribunal, including disclosures to opposing counsel in the course of settlement negotiations.

3. A record in this system of records may be disclosed, as a routine use, to a Member of Congress submitting a request involving an individual, to whom the record pertains, when the individual has requested assistance from the Member with respect to the subject matter of the record.

4. A record in this system of records may be disclosed, as a routine use, to a contractor of the Agency having need for the information in order to perform a contract. Recipients of information shall be required to comply with the requirements of the Privacy Act of 1974, as amended, pursuant to 5 U.S.C. 552a(m).

5. A record related to an International Application filed under the Patent Cooperation Treaty in this system of records may be disclosed, as a routine use, to the International Bureau of the World Intellectual Property Organization, pursuant to the Patent Cooperation Treaty.

6. A record in this system of records may be disclosed, as a routine use, to another federal agency for purposes of National Security review (35 U.S.C. 181) and for review pursuant to the Atomic Energy Act (42 U.S.C. 218(c)).

7. A record from this system of records may be disclosed, as a routine use, to the Administrator, General Services, or his/her designee, during an inspection of records conducted by GSA as part of that agency's responsibility to recommend improvements in records management practices and programs, under authority of 44 U.S.C. 2904 and 2906. Such disclosure shall be made in accordance with the GSA regulations governing inspection of records for this purpose, and any other relevant (i.e., GSA or Commerce) directive. Such disclosure shall not be used to make determinations about individuals.

8. A record from this system of records may be disclosed, as a routine use, to the public after either publication of the application pursuant to 35 U.S.C. 122(b) or issuance of a patent pursuant to 35 U.S.C. 151. Further, a record may be disclosed, subject to the limitations of 37 CFR 1.14, as a routine use, to the public if the record was filed in an application which became abandoned or in which the proceedings were terminated and which application is referenced by either a published application, an application open to public inspections or an issued patent.

9. A record from this system of records may be disclosed, as a routine use, to a Federal, State, or local law enforcement agency, if the USPTO becomes aware of a violation or potential violation of law or regulation.

UNITED STATES PATENT AND TRADEMARK OFFICE

Commissioner for Patents
United States Patent and Trademark Office
P.O. Box 1450
Alexandria, VA 22313-1450
www.uspto.gov

In re Patent No. 6656380
Issue Date: December 2,2003
Application No. 09978851
Filed: October 16,2001
Attorney Docket No.

:

:DECISION GRANTING PETITION
:UNDER 37 CFR 1.378(c)

:

This is a decision on the electronic petition, filed January 24,2008 ,under 37 CFR 1.378(c) to accept the unintentionally delayed payment of the 3.5 year maintenance fee for the above-identified patent.

The petition is GRANTED.

The maintenance fee is accepted, and the above-identified patent reinstated as of January 24,2008 . This decision also constitutes notice that the fee has been accepted. An electronic copy of the petition and this decision has been created as an entry in an Image File Wrapper. Nevertheless, petitioner should print and retain an independent copy

Telephone inquires related to this electronic decision should be directed to the Electronic Business Center at 1-866-217-9197.

UNITED STATES PATENT AND TRADEMARK OFFICE

Commissioner for Patents
United States Patent and Trademark Office
P.O. Box 1450
Alexandria, VA 22313-1450
www.uspto.gov

PAPER NO. 6

MORGAN LEWIS & BOCKIUS LLP
1701 MARKET STREET
PHILADELPHIA, PA 19103-2921

COPY MAILED

APR 06 2005

OFFICE OF PETITIONS

In re Application of :
Albert Mavashev et al :
Application No. 09/978,853 :
Filed: October 16, 2001 :
Attorney Docket No. 053493-0003 :

DECISION ON PETITION
UNDER 37 CFR 1.137(b)

This is a decision on the petition, filed March 16, 2005, which is being treated as a petition under 37 CFR 1.137(b) to revive the instant nonprovisional application for failure to timely notify the U.S. Patent and Trademark Office (USPTO) of the filing of an application in a foreign country, or under a multinational treaty that requires publication of applications eighteen months after filing. See 37 CFR 1.137(f).

The petition is **DISMISSED**.

Any request for reconsideration of this decision must be submitted within TWO (2) MONTHS from the mail date of this decision. Extensions of time under 37 CFR 1.136(a) are permitted. The reconsideration request should include a cover letter entitled "Renewed Petition under 37 CFR 1.137(b)." This is **not** a final agency action within the meaning of 5 U.S.C. § 704.

A grantable petition under 37 CFR 1.137(b) must be accompanied by: (1) the required reply, unless previously filed; (2) the petition fee as set forth in 37 CFR 1.17(m); (3) a statement that the entire delay in filing the required reply from the due date for the reply until the filing of a grantable petition pursuant to 37 CFR 1.137(b) was unintentional; and (4) any terminal disclaimer (and fee as set forth in 37 CFR 1.20(d)) required by 37 CFR 1.137(c). Where there is a question as to whether either the abandonment or the delay in filing a petition under 37 CFR 1.137 was unintentional, the Commissioner may require additional information. See MPEP 711.03(c)(III)(C) and (D). The instant petition lacks item (1).

The instant petition fails to comply with item (1) above in that no notice or statement has been provided as to the filing date of the international application. Enclosed is a copy of form PTO/SB/64a, Petition for Revival of an Application for Patent Abandoned for Failure to Notify the Office of a Foreign or International Filing (37 CFR 1.137(f)). Accordingly, before a decision can be rendered on the instant petition, petitioner must provide the filing date of the international application and must be accompanied by a renewed petition under 37 CFR 1.137(b).

Further correspondence with respect to this matter should be addressed as follows:

By mail: Mail Stop PETITIONS
Commissioner for Patents
Post Office Box 1450
Alexandria, VA 22313-1450

By hand: Customer Service Window:
Randolph Building
401 Dulany Street
Alexandria, VA 22314

By fax: (703) 872-9306
ATTN: Office of Petitions

Any questions concerning this matter may be directed to Irvin Dingle at (571) 272-3210.

Irvin Dingle
Petitions Examiner
Office of Petitions
Office of the Deputy Commissioner
for Patent Examination Policy

Attachment: form PTO/SB/64a, Petition for Revival of an Application for Patent Abandoned for Failure to Notify the Office of a Foreign or International Filing (37 CFR 1.137(f))

UNITED STATES PATENT AND TRADEMARK OFFICE

Commissioner for Patents
United States Patent and Trademark Office
P.O. Box 1450
Alexandria, VA 22313-1450
www.uspto.gov

Paper No. 8

MORGAN LEWIS BOCKIUS LLP
1701 MARKET STREET
PHILADELPHIA, PA 19103-2921

COPY MAILED

MAY 2 6 2005

OFFICE OF PETITIONS

In re Application of	:	
Albert Mavashev et al	:	
Application No. 09/978,853	:	ON PETITION
Filed: October 16, 2001	:	
Attorney Docket No. 053493-0003	:	

This is a decision on the petitions filed, March 16, 2005 and April 21, 2005 which is being treated as a petition under 37 CFR 1.137(b), to revive the above-identified application.

The petition is **GRANTED**.

The Communication Regarding Rescission Of Nonpublication Request and/or Notice of Foreign Filing will be mailed in a separate cover.

Telephone inquiries concerning this decision should be directed to Irvin Dingle at (571) 272-3210.

This application is being forwarded to Technology Center AU 2122 for further processing.

Irvin Dingle
Petitions Examiner
Office of Petitions
Office of the Deputy Commissioner
for Patent Examination Policy

UNITED STATES PATENT AND TRADEMARK OFFICE

Commissioner for Patents
United States Patent and Trademark Office
P.O. Box 1450
Alexandria, VA 22313-1450
www.uspto.gov

FITCH EVEN TABIN AND FLANNERY
120 SOUTH LA SALLE STREET
SUITE 1600
CHICAGO IL 60603-3406

COPY MAILED
MAY 0 4 2006
OFFICE OF PETITIONS

In re Application of :
STIBOLT :
Application No. 09/978,862 : DECISION ON PETITION
Filed: October 16, 2001 : TO WITHDRAW
Attorney Docket No. 78795 : FROM RECORD

This is a decision on the Request to Withdraw as attorney or agent of record under 37 C.F.R. § 1.36(b), filed January 18, 2006.

The request is **APPROVED**.

A grantable request to withdraw as attorney/agent of record must be signed by every attorney/agent seeking to withdraw or contain a clear indication that one attorney is signing on behalf of another/others. A request to withdraw will not be approved unless at least 30 (thirty) days would remain between the date of approval and the later of the expiration date of a time to file a response or the expiration date of the maximum time period which can be extended under 37 C.F.R. § 1.136(a).

The request was signed by Jon A. Birmingham on behalf of all attorneys of record who are associated with Customer No. 22242. All attorneys/agents associated with the Customer Number 22242 have been withdrawn. Applicant is reminded that there is no attorney of record at this time.

The correspondence address of record has been changed and the new correspondence address is the address indicated below.

A Notice of Appeal was filed on January 17, 2006, which requires a response from the Applicant within the time period set forth in 37 CFR 41.37.

Telephone inquiries concerning this decision should be directed to the undersigned at 571-272-4787.

Denise Pothier
Petitions Examiner
Office of Petitions

cc: PAUL STIBOLT
21413 MAIN STREET
MATTESON, IL 60443

UNITED STATES PATENT AND TRADEMARK OFFICE

Commissioner for Patents
United States Patent and Trademark Office
P.O. Box 1450
Alexandria, VA 22313-1450
www.uspto.gov

COPY MAILED

JAN 31 2006

OFFICE OF PETITIONS

CALFEE HALTER & GRISWOLD, LLP
800 SUPERIOR AVENUE
SUITE 1400
CLEVELAND, OH 44114

In re Application of	:	
David J. Slyman, Jr.	:	
Application No. 09/978,866	:	DECISION ON PETITION
Filed: October 16, 2001	:	TO WITHDRAW
Attorney Docket No. 27218	:	FROM RECORD
	:	

This is a decision on the Request to Withdraw as attorney or agent of record under 37 C.F.R. § 1.36(b), filed August 29, 2005.

The request is **APPROVED**.

A grantable request to withdraw as attorney/agent of record must be signed by every attorney/agent seeking to withdraw or contain a clear indication that one attorney is signing on behalf of another/others. A request to withdraw will not be approved unless at least 30 (thirty) days would remain between the date of approval and the later of the expiration date of a time to file a response or the expiration date of the maximum time period which can be extended under 37 C.F.R. § 1.136(a).

The request was signed by Brian E. Kondas on behalf of all attorneys of record. Applicant is reminded that there is no attorney of record at this time.

Telephone inquiries concerning this decision should be directed to Irvin Dingle at (571) 272-3210.

Irvin Dingle for

Amelia Au
Petitions Examiner
Office of Petitions

cc: David J. Slyman, Jr.
7 Town Center Drive, Suite 102
Huntsville, AL 35806

UNITED STATES PATENT AND TRADEMARK OFFICE

COMMISSIONER FOR PATENTS
UNITED STATES PATENT AND TRADEMARK OFFICE
P.O. BOX 1450
ALEXANDRIA, VA 22313-1450
www.uspto.gov

MOTOROLA, INC.
1303 EAST ALGONQUIN ROAD
IL01/3RD
SCHAUMBURG, IL 60196

COPY MAILED
JUL 24 2006
OFFICE OF PETITIONS

In re Application of	:	
Douglas A. Kuhlman, et. al.	:	
Application No. 09/978,890	:	ON PETITION
Filed: October 17, 2001	:	
Attorney Docket No. CM01962G	:	

This is a decision on the petition under 37 CFR 1.137(b), filed by facsimile transmission on March 24, 2006, to revive the above-identified application.

The application became abandoned for failure to timely respond to the Notice of Allowance and Fee(s) Due mailed December 21, 2005.

The petition satisfies the requirements of 37 CFR 1.137(b) in that petitioner has supplied (1) the reply in the form of $1,400 for payment of the issue fee and $300 for payment of the publication fee; (2) the petition fee of $1,500; and (3) an adequate statement of unintentional delay. Therefore, the petition is **GRANTED**.

This application file is being referred to the Office of Publications to be processed into a patent.

Telephone inquiries concerning this decision should be directed to the undersigned at (571) 272-3226.

Andrea Smith
Petitions Examiner
Office of Petitions

Under the Paperwork Reduction Act of 1995, no persons are required to respond to a collection of information unless it displays valid OMB control number.

PETITION TO ACCEPT UNINTENTIONALLY DELAYED PAYMENT OF MAINTENANCE FEE IN AN EXPIRED PATENT (37 CFR 1.378(c))

Patent Number	Issue Date (YYYY-MM-DD)	Application Number	Filing Date (YYYY-MM-DD)	Docket Number (if applicable)
6707305	2004-03-16	09978910	2001-10-16	PSI-01

CAUTION: Maintenance fee (and surcharge, if any) payment must correctly identify: (1) the patent number and (2) the application number of the actual U.S. application leading to issuance of that patent to ensure the fee(s) is/are associated with the correct patent. 37 CFR 1.366(c) and (d).

SMALL ENTITY
☒ Patentee claims, or has previously claimed, small entity status. See 37 CFR 1.27.

LOSS OF ENTITLEMENT TO SMALL ENTITY STATUS
☐ Patentee is no longer entitled to small entity status. See 37 CFR 1.27(g)

NOT Small Entity		Small Entity	
Fee	Code	Fee	Code
○ 3 ½ year	(1551)	◉ 3 ½ year	(2551)
○ 7 ½ year	(1552)	○ 7 ½ year	(2552)
○ 11 ½ year	(1553)	○ 11 ½ year	(2553)

SURCHARGE
The surcharge required by 37 CFR 1.20(i)(2) (Fee Code 1558) must be paid as a condition of accepting unintentionally delayed payment of the maintenance fee.

MAINTENANCE FEE (37 CFR 1.20(e)-(g))
The appropriate maintenance fee must be submitted with this petition.

STATEMENT
THE UNDERSIGNED CERTIFIES THAT THE DELAY IN PAYMENT OF THE MAINTENANCE FEE TO THIS PATENT WAS UNINTENTIONAL

PETITIONER(S) REQUEST THAT THE DELAYED PAYMENT OF THE MAINTENANCE FEE BE ACCEPTED AND THE PATENT REINSTATED

THIS PORTION MUST BE COMPLETED BY THE SIGNATORY OR SIGNATORIES

37 CFR 1.378(d) states: "Any petition under this section must be signed by an attorney or agent registered to practice before the Patent and Trademark Office, or by the patentee, the assignee, or other party in interest."

I certify, in accordance with 37 CFR 1.4(d)(4) that I am

◉ An attorney or agent registered to practice before the Patent and Trademark Office

○ A sole patentee

○ A joint patentee; I certify that I am authorized to sign this submission on behalf of all the other patentees.

○ A joint patentee; all of whom are signing this e-petition

○ The assignee of record of the entire interest

Patent Practitioner			
A signature of the applicant or representative is required in accordance with 37 CFR 1.33 and 10.18. Please see 37 CFR 1.4(d) for the form of the signature			
Signature	/william j kolegraff/	Date (YYYY-MM-DD)	2008-04-02
Name	William J Kolegraff	Registration Number	41125

This collection of information is required by 37 CFR 1.378(c). The information is required to obtain or retain a benefit by the public which is to file (and by the USPTO to process) an application. Confidentiality is governed by 35 U.S.C. 122 and 37 CFR 1.11 and 1.14. This collection is estimated to take 1 hour to complete, including gathering, preparing, and submitting the completed application form to the USPTO. Time will vary depending upon the individual case. Any comments on the amount of time you require to complete this form and/ or suggestions for reducing this burden, should be sent to the Chief Information Officer, U.S. Patent and Trademark Office, U.S. Department of Commerce, P.O. Box 1450, Alexandria, VA 22313-1450. DO NOT SEND FEES OR COMPLETED FORMS TO THIS ADDRESS. **This form can only be used when in conjunction with EFS-Web. If this form is mailed to the USPTO, it may cause delays in reinstating the patent.**

Privacy Act Statement

The Privacy Act of 1974 (P.L. 93-579) requires that you be given certain information in connection with your submission of the attached form related to a patent application or patent. Accordingly, pursuant to the requirements of the Act, please be advised that: (1) the general authority for the collection of this information is 35 U.S.C. 2(b)(2); (2) furnishing of the information solicited is voluntary; and (3) the principal purpose for which the information is used by the U.S. Patent and Trademark Office is to process and/or examine your submission related to a patent application or patent. If you do not furnish the requested information, the U.S. Patent and Trademark Office may not be able to process and/or examine your submission, which may result in termination of proceedings or abandonment of the application or expiration of the patent.

The information provided by you in this form will be subject to the following routine uses:

1. The information on this form will be treated confidentially to the extent allowed under the Freedom of Information Act (5 U.S.C. 552) and the Privacy Act (5 U.S.C. 552a). Records from this system of records may be disclosed to the Department of Justice to determine whether the Freedom of Information Act requires disclosure of these record s.

2. A record from this system of records may be disclosed, as a routine use, in the course of presenting evidence to a court, magistrate, or administrative tribunal, including disclosures to opposing counsel in the course of settlement negotiations.

3. A record in this system of records may be disclosed, as a routine use, to a Member of Congress submitting a request involving an individual, to whom the record pertains, when the individual has requested assistance from the Member with respect to the subject matter of the record.

4. A record in this system of records may be disclosed, as a routine use, to a contractor of the Agency having need for the information in order to perform a contract. Recipients of information shall be required to comply with the requirements of the Privacy Act of 1974, as amended, pursuant to 5 U.S.C. 552a(m).

5. A record related to an International Application filed under the Patent Cooperation Treaty in this system of records may be disclosed, as a routine use, to the International Bureau of the World Intellectual Property Organization, pursuant to the Patent Cooperation Treaty.

6. A record in this system of records may be disclosed, as a routine use, to another federal agency for purposes of National Security review (35 U.S.C. 181) and for review pursuant to the Atomic Energy Act (42 U.S.C. 218(c)).

7. A record from this system of records may be disclosed, as a routine use, to the Administrator, General Services, or his/her designee, during an inspection of records conducted by GSA as part of that agency's responsibility to recommend improvements in records management practices and programs, under authority of 44 U.S.C. 2904 and 2906. Such disclosure shall be made in accordance with the GSA regulations governing inspection of records for this purpose, and any other relevant (i.e., GSA or Commerce) directive. Such disclosure shall not be used to make determinations about individuals.

8. A record from this system of records may be disclosed, as a routine use, to the public after either publication of the application pursuant to 35 U.S.C. 122(b) or issuance of a patent pursuant to 35 U.S.C. 151. Further, a record may be disclosed, subject to the limitations of 37 CFR 1.14, as a routine use, to the public if the record was filed in an application which became abandoned or in which the proceedings were terminated and which application is referenced by either a published application, an application open to public inspections or an issued patent.

9. A record from this system of records may be disclosed, as a routine use, to a Federal, State, or local law enforcement agency, if the USPTO becomes aware of a violation or potential violation of law or regulation.

UNITED STATES PATENT AND TRADEMARK OFFICE

Commissioner for Patents
United States Patent and Trademark Office
P.O. Box 1450
Alexandria, VA 22313-1450
www.uspto.gov

In re Patent No. 6707305
Issue Date: March 16,2004
Application No. 09978910
Filed: October 16,2001
Attorney Docket No. PSI-01

:
:DECISION GRANTING PETITION
:UNDER 37 CFR 1.378(c)
:

This is a decision on the electronic petition, filed April 2,2008 ,under 37 CFR 1.378(c) to accept the unintentionally delayed payment of the 3.5 year maintenance fee for the above-identified patent.

The petition is GRANTED.

The maintenance fee is accepted, and the above-identified patent reinstated as of April 2,2008 . This decision also constitutes notice that the fee has been accepted. An electronic copy of the petition and this decision has been created as an entry in an Image File Wrapper. Nevertheless, petitioner should print and retain an independent copy

Telephone inquires related to this electronic decision should be directed to the Electronic Business Center at 1-866-217-9197.

UNITED STATES PATENT AND TRADEMARK OFFICE

Commissioner for Patents
United States Patent and Trademark Office
P.O. Box 1450
Alexandria, VA 22313-1450
www.uspto.gov

VAN DYKE, GARDNER, LINN & BURKHART, LLP
2851 CHARLEVOIX DRIVE, S.E.
P.O. BOX 888695
GRAND RAPIDS, MI 49588-8695

COPY MAILED
MAY 21 2004
OFFICE OF PETITIONS

In re Application of	:	
Kassouni, Van	:	
Application No. 09/978,911	:	DECISION GRANTING PETITION
Filed: October 16, 2001	:	UNDER 37 CFR 1.137(b)
Attorney Docket No. KAS01 P-100	:	

This is a decision on the petition, filed April 12, 2004, which is being treated as a petition under 37 CFR 1.137(b) to revive the instant non-provisional application for failure to timely notify the U.S. Patent and Trademark (USPTO) of the filing of an application in a foreign country, or under a multinational treaty that requires publication of applications eighteen months after filing. *See* 37 CFR 1.137(f).

The petition is **GRANTED**.

Petitioner states that the instant nonprovisional application is the subject of an application filed in an eighteen-month publication country on January 21, 2002. However, the USPTO was unintentionally not notified of this filing within 45 days subsequent to the filing of the subject application in an eighteen-month publication country.

In view of the above, this application became abandoned pursuant to 35 U.S.C. § 122(b)(2)(B)(iii) and 37 CFR 1.213(c) for failure to timely notify the Office of the filing of an application in a foreign country or under a multilateral international agreement that requires publication of applications 18 months after filing.

A petition to revive an application abandoned pursuant to 35 U.S.C. 122(b)(2)(B)(iii) for failure to notify the USPTO of a foreign filing must be accompanied by:

(1) the required reply which is met by the notification of such filing in a foreign country or under a multinational treaty;
(2) the petition fee as set forth in 37 CFR 1.17(m); and

(3) a statement that the entire delay in filing the required reply from the due date of the reply until the filing of a grantable petition was unintentional.

The instant petition has been found to be in compliance with 37 CFR 1.137(b). Accordingly, the failure to timely notify the USPTO of a foreign or international filing within 45 days after the date of filing of such foreign or international application as provided by 35 U.S.C. § 122(b)(2)(B)(iii) and 37 CFR 1.213(c) is accepted as having been unintentionally delayed.

The previous Request and Certification under 35 U.S.C. § 122(b)(2)(B)(i) was rescinded on February 2, 2002. The above-identified application was publishing on April 17, 2003.

This matter is being forwarded to the Publishing Division for further processing.

Telephone inquiries concerning this decision should be directed to the undersigned at (703) 306-0482.

Liana Chase

Liana Chase
Petitions Examiner
Office of Petitions
Office of the Deputy Commissioner
for Patent Examination Policy

UNITED STATES PATENT AND TRADEMARK OFFICE

UNITED STATES DEPARTMENT OF COMMERCE
United States Patent and Trademark Office
Address: COMMISSIONER FOR PATENTS
P.O. Box 1450
Alexandria, Virginia 22313-1450
www.uspto.gov

Booth Udall, PLC
1155 W Rio Salado Parkway
Suite 101
Tempe, AZ 85281

Mail Date: 04/20/2010

Applicant	: Manoel Tenorio	: DECISION ON REQUEST FOR
Patent Number	: 7620566	: RECALCULATION of PATENT
Issue Date	: 11/17/2009	: TERM ADJUSTMENT IN VIEW
Appliction No	: 09/978,926	: OF WYETH AND NOTICE OF INTENT TO
Filed	: 10/16/2001	: ISSUE CERTIFICATE OF CORRECTION
		:

The Request for Recalculation is **GRANTED** to the extent indicated.

The patent term adjustment has been determined to be **2735** days. The USPTO will *sua sponte* issue a certificate of correction reflecting the amount of PTA days determined by the recalculation.

Prior to the issuance of the certificate of correction, the USPTO will afford patentee an opportunity to be heard and request reconsideration. Accordingly, patentee has **one month or thirty (30) days**, whichever is longer, to file a request for reconsideration of this patent term adjustment calculation. See 35 U.S.C. 154(b)(3)(B)(ii) and 37 CFR 1.322(a)(4). No extensions of time will be granted under 37 CFR 1.136.

Patentee should use document code PET.OP if electronically filing a request for reconsideration of this patent term adjustment calculation. The patentee must also include the information required by 37 CFR 1.705(b)(2) and the fee required by 37 CFR 1.18(e). If patentee does not file a timely request for reconsideration of this patent term adjustment calculation including the information required by 37 CFR 1.705(b)(2) and the fee required by 37 CFR 1.18(e), the USPTO will issue a certificate of correction reflecting the PTA determination noted above.

Patentee should be aware that in order to preserve the right to review in the United States District Court for the District of Columbia of the USPTO patent term adjustment determination, patentee must ensure that he or she also take the steps required under 35 U.S.C. 154(b)(4)(A) in a timely manner. Nothing in the request for recalculation should be construed as providing an alternative time frame for commencing a civil action under 35 U.S.C. 154(b)(4)(A).

Any questions concerning this decision should be directed to the Office of Patent Legal Administration at 571-272-7702.

UNITED STATES PATENT AND TRADEMARK OFFICE

UNITED STATES DEPARTMENT OF COMMERCE
United States Patent and Trademark Office
Address: COMMISSIONER FOR PATENTS
P.O. Box 1450
Alexandria, Virginia 22313-1450
www.uspto.gov

GARDERE WYNNE SEWELL LLP
INTELLECTUAL PROPERTY SECTION
3000 THANKSGIVING TOWER
1601 ELM ST
DALLAS, TX 75201-4761

Mail Date: 04/21/2010

Applicant	: Li Mo	: DECISION ON REQUEST FOR
Patent Number	: 7643492	: RECALCULATION of PATENT
Issue Date	: 01/05/2010	: TERM ADJUSTMENT IN VIEW
Appliction No	: 09/978,928	: OF WYETH AND NOTICE OF INTENT TO
Filed	: 10/15/2001	: ISSUE CERTIFICATE OF CORRECTION
		:

The Request for Recalculation is **GRANTED** to the extent indicated.

The patent term adjustment has been determined to be **982** days. The USPTO will *sua sponte* issue a certificate of correction reflecting the amount of PTA days determined by the recalculation.

Prior to the issuance of the certificate of correction, the USPTO will afford patentee an opportunity to be heard and request reconsideration. Accordingly, patentee has **one month or thirty (30) days**, whichever is longer, to file a request for reconsideration of this patent term adjustment calculation. See 35 U.S.C. 154(b)(3)(B)(ii) and 37 CFR 1.322(a)(4). No extensions of time will be granted under 37 CFR 1.136.

Patentee should use document code PET.OP if electronically filing a request for reconsideration of this patent term adjustment calculation. The patentee must also include the information required by 37 CFR 1.705(b)(2) and the fee required by 37 CFR 1.18(e). If patentee does not file a timely request for reconsideration of this patent term adjustment calculation including the information required by 37 CFR 1.705(b)(2) and the fee required by 37 CFR 1.18(e), the USPTO will issue a certificate of correction reflecting the PTA determination noted above.

Patentee should be aware that in order to preserve the right to review in the United States District Court for the District of Columbia of the USPTO patent term adjustment determination, patentee must ensure that he or she also take the steps required under 35 U.S.C. 154(b)(4)(A) in a timely manner. Nothing in the request for recalculation should be construed as providing an alternative time frame for commencing a civil action under 35 U.S.C. 154(b)(4)(A).

Any questions concerning this decision should be directed to the Office of Patent Legal Administration at 571-272-7702.

UNITED STATES
PATENT AND
TRADEMARK OFFICE

UNDER SECRETARY OF COMMERCE FOR INTELLECTUAL PROPERTY
AND DIRECTOR OF THE UNITED STATES PATENT AND TRADEMARK OFFICE
WASHINGTON, D.C. 20231
WWW.USPTO.GOV

NOV - 6 2002

#3

MARK D. BOWEN, ESQ.
STEARNS WEAVER MILLER WEISSLER
ALHADEFF & SITTERSON PA
200 EAST BROWARD BOULEVARD SUITE 1900
FT LAUDERDALE FL 33301

In re Application of	:
Barrington A. Morris et al	:
Serial No.: 09/978,947	: PETITION TO MAKE SPECIAL
Filed: October 126, 2001	:
Attorney Docket No.: 4512.016	:

This is in response to applicants' petition filed October 15, 2002, to make the above-identified application special under the provisions of 37 CFR 1.102(c), based on actual infringement.

Applicant has satisfied the provisions set forth in M.P.E.P. 708.02, II. Therefor the petition is **GRANTED**.

The application will be forwarded to the examiner for action on the merits commensurate with this decision.

Should there be any questions with regard to this letter please contact William R. Dixon, Jr. by letter addressed to the Director, Technology Center 1600, Washington, DC 20231, or by telephone at (703) 308-3824 or by facsimile transmission at (703) 305-7230.

William R. Dixon, Jr.
Special Program Examiner
Technology Center 1600

UNITED STATES PATENT AND TRADEMARK OFFICE

Commissioner for Patents
United States Patent and Trademark Office
P.O. Box 1450
Alexandria, VA 22313-1450
www.uspto.gov

MARK D. BOWEN
STEARNS WEAVER MILLER, ET AL
SUITE 1900
200 EAST BROWARD BOULEVARD
FORT LAUDERDALE FL 33301

COPY MAILED

JUN 2 8 2005

OFFICE OF PETITIONS

In re Application of	:	
Barrington A. Morris et al	:	
Application No. 09/978,947	:	ON PETITION
Filed: October 16, 2001	:	
Attorney Docket No. 4512.016	:	

This is a decision on the petition under 37 CFR 1.137(b), filed May 16, 2005, and on May 18, 2005, to revive the above-identified application.

The petition is **GRANTED**.

The above-identified application became abandoned for failure to submit the corrected drawings in a timely manner in reply to the Notice of Allowability mailed November 19, 2004, which set a shortened statutory period for reply of three (3) months. Accordingly, the above-identified application became abandoned on February 23, 2005.

Telephone inquiries concerning this decision should be directed to the undersigned at (571) 272-3208.

The application file is being referred to the Office of Patent Publication to oversee review of the drawings filed on May 16, 2005 and May 18, 2005.

Karen Creasy

Karen Creasy
Petitions Examiner
Office of Petitions
Office of the Deputy Commissioner
for Patent Examination Policy

UNITED STATES PATENT AND TRADEMARK OFFICE

Commissioner for Patents
United States Patent and Trademark Office
P.O. Box 1450
Alexandria, VA 22313-1450
www.uspto.gov

THOMAS H. CLOSE
PATENT LEGAL STAFF
EASTMAN KODAK COMPANY
343 STATE STREET
ROCHESTER, NY 14650-2201

COPY MAILED

AUG 22 2008

OFFICE OF PETITIONS

In re Application of	:	
Alan B. Marchant et al	:	
Application No. 09/978,955	:	ON PETITION
Filed: October 16, 2001	:	
Attorney Docket No.	:	

This is a decision on the petition under 37 CFR 1.137(b), filed May 13, 2008, to revive the above-identified application.

The petition is **GRANTED**.

The above-identified application became abandoned for failure to reply in a timely manner to the non-final Office action mailed September 13, 2007, which set a shortened statutory period for reply of three (3) months. No extension of time under the provisions of 37 CFR 1.136(a) were obtained. Accordingly, the above-identified application became abandoned on December 14, 2007.

Telephone inquiries concerning this decision should be directed to Irvin Dingle at (571) 272-3210.

This matter is being referred to Technology Center AU 2622 for further processing.

Irvin Dingle
Petitions Examiner
Office of Petitions

UNITED STATES PATENT AND TRADEMARK OFFICE

Commissioner for Patents
United States Patent and Trademark Office
P.O. Box 1450
Alexandria, VA 22313-1450
www.uspto.gov

Date : July 8, 2007

Patent No. : 7139122 B1
Application No : 09/978957
Inventor(s) : Eastman, et al.
Issued : November 21, 2006
Title : **SYSTEM AND METHOD FOR ENHANCING CONFOCAL REFLECTANCE IMAGES OF TISSUE SPECIMENS**
Docket No. :

Re: Request for Certificate of Correction

Consideration has been given your request for the issuance of a certificate of correction for the above-identified patent under the provisions of 37 CFR 1.322 and/or 1.323.

Assignees' names and addresses (assignment data) printed in a patent are based *solely* on information supplied in the appropriate space for identifying the assignment data, i.e., item 3 of the Fee(s) Transmittal Form PTOL-85B. After payment of the issue fee, correction of assignment data submitted on the PTOL-85B can only be done by Certificate of Correction under 37 CFR 1.323, with a request under 37 CFR 3.81(b).

A request for a patent to be corrected to state the name of the assignee must:

A. state that the assignment was submitted for recordation as set forth in 37 CFR 3.11 before issuance of the patent;
B. include a request for a certificate of correction under 37 CFR 1.323 along with the fee set forth in 37 CFR 1.20(a); and
C. include the processing fee set forth in 37 CFR 1.17(i).

If the request is granted, Certificates of Correction Branch will be notified that a Certificate of Correction may be issued.

See Manual of Patent Examining Procedure, Section 1481.01 (Rev. 3) (Oct. 2005).

Applicant has not included items A and or C above, accordingly, the request for Certificate of Correction to add or change the assignee data is denied.

Any request under 37 CFR 3.81(b) should be directed to the following address or facsimile number:

By mail:	Mail Stop PETITIONS Commissioner for Patents Post Office Box 1450 Alexandria, VA 22313-1450
By hand:	Customer Service Window Mail Stop Petitions Randolph Building 401 Dulany Street Alexandria, VA 22314
By fax:	571-273-8300 ATTN: Office of Petitions

If a fee (currently $100) was previously submitted for consideration of a Request for Certificate of Correction, under CFR 1.323, to correct assignment data, no additional fee is required.

Elisha Evans
For Cecelia Newman
Decisions & Certificates
of Correction Branch
(703) 308-9390 ext. 110

Kenneth J. Lukacher
South Winton Court
3136 Winton Road South, Suite 301
Rochester, NY 14623

CBN/eme

UNITED STATES PATENT AND TRADEMARK OFFICE

Commissioner for Patents
United States Patent and Trademark Office
P.O. Box 1450
Alexandria, VA 22313-1450
www.uspto.gov

KENNETH J. LUKACHER
SOUTH WINTON COURT
3136 WINTON ROAD SOUTH
ROCHESTER NY 14623

COPY MAILED

FEB 14 2008

In re Patent No. 7139122	:	
Issue Date: 11/21/2006	:	
Application No. 09/978957	:	ON PETITION
Filed: 10/16/2001	:	
Attorney Docket No. ML-0520CV	:	

This is a decision on the petition filed August 20, 2007, which is being treated as a request under 37 CFR 3.81(b)[1] to correct the name of the assignee on the front page of the above-identified patent by way of a Certificate of Correction.

The request is **GRANTED**.

Telephone inquiries concerning this decision may be directed to the undersigned at (571) 272-3231. Inquiries regarding the issuance of a certificate of correction should be directed to the Certificate of Correction Branch at (571) 272-4200.

The Certificates of Correction Branch will be notified of this decision granting the petition under 37 CFR 3.81(b) and directing issuance of the requested Certificate of Correction.

D Wood
Douglas I. Wood
Senior Petitions Attorney
Office of Petitions

[1] *See* MPEP 1309, subsection II; and Official Gazette of June 22, 2004.

PET. DEC.

UNITED STATES PATENT AND TRADEMARK OFFICE

COMMISSIONER FOR PATENTS
UNITED STATES PATENT AND TRADEMARK OFFICE
P.O. BOX 1450
ALEXANDRIA, VA 22313-1450
www.uspto.gov

APR 16 2004

td

Mailed :	:	
In re Application of	:	DECISION ON
John D. Martin	:	PETITION
Serial No. 09/978,962	:	
Filed: October 15, 2001		
For: DOWN FLOW RADIAL FLOW FILTER		

This is a decision on the PETITION UNDER 37 CFR 1.181 TO WITHDRAW THE RESTRICTION REQUIREMENT mailed March 26, 2003 and made final in the office action mailed July 15, 2003.

On March 26, 2003, a two way restriction requirement was made by the examiner. The examiner took the position that the groupings of claims were related as process and apparatus for its practice. Applicants traversed the restriction requirement in a response filed May 1, 2003. The examiner repeated the restriction requirement in an office action mailed July 15, 2003 and made the restriction requirement final. Applicants continued to argue the restriction requirement in a response filed November 17, 2003.

On November 17, 2003, the instant petition under 37 CFR 1.181 was filed to formally request the withdrawal of the restriction requirement.

Applicant's position for the withdrawal of the restriction requirement is that the examiner has not shown that the separate groups are distinct.

DECISION

Sections 803 and 806.05(c) of the MPEP state:

803 Restriction - When Proper
Under the statute an application may properly be required to be restricted to one of two or more claimed inventions only if they are able to support separate pat-ents and they are either independent (MPEP § 806.04 - § 806.04(i)) or distinct (MPEP § 806.05 - §

806.05(e) Process and Apparatus for Its Practice — Distinctness
In applications claiming inventions in different statutory categories, only one-way distinctness is generally needed to support a restriction requirement. See MPEP § 806.05(c).

Process and apparatus for its practice can be shown to be distinct inventions, if either or both of the following can be shown: (A) that the process as claimed can be practiced by another materially different apparatus or by hand; or (B) that the apparatus as claimed can be used to practice another and materially different process.
If the apparatus claims include a claim to "means" for practicing the process, the claim is a linking claim and must be examined with the elected invention. If it is ultimately allowed, rejoinder is required. See MPEP § 809.04.

In making the restriction final, the examiner states that the inventions are distinct because the apparatus as claimed can be used to perform another process. The examiner explains that the apparatus could be used in a process in which the media is moved from the upper chamber to the lower chamber without being fluidized, e.g. by plug flow. It is also pointed out that the device could be used to treat fluid in the lower container and regenerated in the upper container. The examiner points out that applicant's figures support such alternate modes of operation.

Petitioner argues that the material differences argued by the examiner are contrary to the limitations of the apparatus claims. It is argued that claim 17 requires that "...said media is fluidized during movement from said upper portion of said device and said lower portion." Additionally, it is argued that claim 17 requires that the fluid is moved from the upper portion of the device to a lower portion. This argument is not persuasive. It is well settled that method limitations and/or intended use limitations do not distinguish a claimed apparatus over a prior art apparatus. The limitation that the media is fluidized during movement does not further limit the actual structure of the apparatus and therefore cannot be used to distinguish over the examiner's proposed apparatus used in a materially different process. The same is true for the limitation stating that the fluid flows from one portion of the apparatus to the other. Such a step does not impart any structure to the actually apparatus. Because the process limitations and intended use limitations do not have any bearing on the structure claimed, the examiner has in fact drawn a distinction with the apparatus as claimed. Therefore, the restriction is proper.

Accordingly, the petition for withdrawal of the restriction requirement is **DENIED.** The application is being forwarded to the examiner to consider the request for continued examination filed January 21, 2004.

JMStone

Jacqueline M. Stone, Director
Technology Center 1700
Chemical and Materials Engineering

CHAUZA & HANDLEY, L.L.P.
PO BOX 140036
IRVING TX 75014

UNITED STATES PATENT AND TRADEMARK OFFICE

Commissioner for Patents
United States Patent and Trademark Office
P.O. Box 1450
Alexandria, VA 22313-1450
www.uspto.gov

Swanson & Bratschun L.L.C.
1745 Shea Center Drive Suite 330
Highlands Ranch, Colorado 80129

COPY MAILED

JUN 16 2005

OFFICE OF PETITIONS

In re Application of
LuPold et al.
Application No. 09/978,969
Filed: October 16, 2001
Attorney Docket No. NEX91

: DECISION GRANTING PETITION

This decision is in response to applicants' "APPLICATION FOR PATENT TERM ADJUSTMENT (PTA) UNDER 37 C.F.R. § 1.705(b)" timely[1] filed on August 06, 2004 requesting that the office change the PTA determination at the time of the mailing of the notice of allowance from a period of zero(0) days to thirty (30) days.

Applicants' application for PTA is **GRANTED to the extent herein indicated.** The Office will adjust the PAIR calculation from a period of zero days to two hundred and thirty-four (234) days.

Applicants argue that the Office erred in calculating two hundred and forty-seven days of administrative delay based upon applicants' failure respond to the non-final rejection mailed on January 15, 2003 until December 18, 2003. Applicants assert that the actual date of response to the non-final rejection was in fact April 14, 2003, within the three month time-period for reply. Accordingly, applicants assert that the 247 administrative delay was in error.

A review of the file reveals that applicants' arguments are persuasive. Applicants have provided a postcard stamped receipt showing that the response to the mailed non-final rejection occurred on April 14, 2003 as suggested by applicant. Accordingly, the response was submitted timely[2] filed and no applicant delay occurred in the submission of the response. Accordingly, the 247 days of administrative delay was in error. However, because the actual date of response to non-final rejection was April 14, 2003, the Office had until August 14, 2003 but did not actually respond until March 5, 2004, a 204 day delay. Accordingly, the correct PTA determination at the time of the mailing of the notice of allowance is two hundred and thirty-four days (30 + 204=234).

The office has assessed the $200.00 fee required under 37 CFR 1.18(e). No additional fees are

---

[1]Issue fee was paid on September 23, 2004.

[2]Response was timely for PTA purposes because the express mail clearly shows that the response was filed on April 14, 2003 and accordingly within the three month time period provided for 37 CFR 1.704(b).

required by the Office.

After the mailing of this decision, the Office will forward this application to the Office of Patent Publications for a prompt issuance of the patent. The Office apologizes for any delay in issuing the patent and notes that any delay in the issuance beyond four months of the payment of the issue fee will provide applicants additional PTA which will be added at the time of the mailing of the issue notification letter.

Any questions concerning this application should be directed to Kery Fries, Senior Legal Advisor, at 571-272-7757.

Kery A Fries
for

Karin Ferriter
Senior Legal Advisor
Office of Patent Legal Administration
Office of Deputy Commissioner
for Patent Examination Policy

UNITED STATES PATENT AND TRADEMARK OFFICE

Commissioner for Patents
United States Patent and Trademark Office
P.O. Box 1450
Alexandria, VA 22313-1450
www.uspto.gov

COPY MAILED
JUL 1 8 2006
OFFICE OF PETITIONS

Swanson & Bratschun LLC
1745 Shea Center Drive, Suite 330
Highlands Ranch Colorado 80129

In re Application of
Lupold et al.
Application No.09/978,969
Patent No. 6,933,114
Filed: October 16, 2001
Attorney Docket No.NEX91

: DECISION GRANTING APP. For PTA

This decision is in response to applicant's "APPLICATION FOR PATENT TERM ADJUSTMENT UNDER 37 CFR 1.705(d)" timely filed on October 24, 2005 requesting that the Office adjust the PTA determination at the time of the issuance of the patent from a determination of five hundred and fifteen (515) days to a determination of four hundred and forty-six (446) days. The Office will construe this application as a good faith and candor letter and will not assess any fees.

Applicant's request is **GRANTED.** The Office will *sua sponte* issue a certificate of correction to reflect this decision. In addition, the Office will adjust the PAIR calculation to reflect this decision. The proper amount of PTA at the time of the issuance of the patent is four hundred and forty-six (446) days as suggested by applicants.

Applicants are given thirty days to reply to this decision if they disagree. No extensions of time are granted under 37 CFR 1.136.

Applicant assert that the Office erred in granting 69 days additional days of Office delay. Applicants assert that the proper amount of PTA at the time of the issuance of the patent is four hundred and forty-six (446) days.

Applicants arguments are correct. The correct a mount of PTA at the time of the issuance of the patent is 44 days. The Office failed to meet the requirement of 37 CFR 1.702(a)(2) by a period of 234 days. In addition, the Office failed to meet the requirement of 37 CFR 1.702(a)(4) by a period of 212 days. The sixty-nine (69) day of Office delay is in error. Overall, the correct amount of PTA at the time of the issuance of the patent is 446 days.

Since applicant was advising the Office of too much PTA, the Office will not assess any fees in responding to this inquiry. The Office will refund the $200.00 fee that had been previously charged to this account.

After the mailing of this decision, the Office will forward this application to the certificate of correction branch for a prompt issuance of the a certificate of correction.

Any questions concerning this decision should be directed to Kery A. Fries, Senior Legal Advisor, Office of Patent Legal Administration, Office of Deputy Commissioner for Patent

Examination Policy at 571-272-7757.

Kery Fries
Senior Legal Advisor
Office of Patent Legal Administration
Office of Deputy Commissioner
for Patent Examination Policy

cc: adjusted PAIR calculation
Draft cert of correction

DRAFT

UNITED STATES PATENT AND TRADEMARK OFFICE

CERTIFICATE OF CORRECTION

PATENT : 6,933,114 B2

DATED : August 23, 2005

INVENTOR(S) : Lupold et al.

It is certified that error appears in the above-identified patent and that said Letters Patent is hereby corrected as shown below:

On the cover page,

[*] Notice: Subject to any disclaimer, the term of this patent is extended or adjusted under 35 USC 154(b) by (515) days

Delete the phrase "by 515 days" and insert – by 446 days--

UNITED STATES PATENT AND TRADEMARK OFFICE

Commissioner for Patents
United States Patent and Trademark Office
Washington, D.C. 20231
www.uspto.gov

Paper No. 10

Steven F. Weinstock
Abbott Laboratories
Department 377 AP6D/2
100 Abbott Park
Abbott Park, IL 60064-6050

COPY MAILED

APR 15 2003

OFFICE OF PETITIONS

In re Application of
Zhenkun Ma et al.
Application No. 09/978,990
Filed: October 16, 2001
Attorney Docket No. 6740.US.01

ON PETITION

This is a decision on the petition under 37 CFR 1.137(b), filed April 4, 2003, to revive the above-identified application.

The petition is **GRANTED**.

The above-identified application became abandoned for failure to reply in a timely manner in reply to the non-final Office action mailed July 12, 2002, which set a shortened statutory period for reply of three months. No extension of time under the provisions of 37 CFR 1.136 have been obtained. Accordingly, the application became abandoned on October 13, 2002.

The application is being forwarded to Technology Center AU 1623 for further processing.

Telephone inquiries concerning this decision should be directed to Latrice Bond at (703) 308-6911.

Latrice Bond

Latrice Bond
Petitions Examiner
Office of Petitions
Office of the Deputy Commissioner
for Patent Examination Policy

#10
DW

UNITED STATES PATENT AND TRADEMARK OFFICE

COMMISSIONER FOR PATENTS
UNITED STATES PATENT AND TRADEMARK OFFICE
P.O. BOX 1450
ALEXANDRIA, VA 22313-1450
www.uspto.gov

MAY 18 2004

MAILED

MAY 18 2004

OFFICE OF THE DIRECTOR
TC 3600

Sughrue Mion Zinn
Macpeak & Seas
2100 Pennsylvania Avenue NW
Washington DC 20037

In re Application of
Kazuo Hiraguchi et al.
Application No. 09/979,011
Filed: November 15, 2001
For: MAGNETIC TAPE CASSETTE

DECISION ON PETITION TO WITHDRAW THE HOLDING OF ABANDONMENT

This is in response to the Petition to Withdraw the Holding of Abandonment filed in the United States Patent and Trademark Office on February 9, 2004.

The petition is **GRANTED** in view of the following evidence of timely filing :

☐ Postcard receipt being dated_____.

☐ USPTO return facsimile receipt dated _____.

☐ Certificate of Mailing/Transmission signed on _____.
and supported by a statement under 37 C.F.R. 1.8(b)(3).

☐ Hand Delivery Receipt of the specific documents submitted
dated _____.

☐ Certificate of Transmission of CPA under 37 C.F.R. 1.6 filed on _____.

☐ Express Mail Receipt under 37 C.F.R. 1.10 dated _____.

☒ Originally sent response filed July 21, 2003 has been found and matched with the application.

This application is being forwarded to the Supervisory Legal Instruments Examiner for entry of the response and then to the examiner for prompt action.

KJD/mjz: 5/4/04

KENNETH J. DORNER
SPECIAL PROGRAMS EXAMINER
TECHNOLOGY CENTER 3600

UNITED STATES PATENT AND TRADEMARK OFFICE

Commissioner for Patents
United States Patent and Trademark Office
P.O. Box 1450
Alexandria, VA 22313-1450
www.uspto.gov

COPY MAILED

NOV 27 2009

OFFICE OF PETITIONS

Venable, LLP
P.O. Box 34385
Washington, DC 20043-9998

In re Patent No. 6,845,342	:	
Issue Date: January 18, 2005	:	
Application No. 09/979,013	:	ON PETITION
Filed: November 15, 2001	:	
Attorney Docket No. 31978-175996	:	

This is a decision on the petition under 37 CFR 1.378(c), filed August 10, 2009, to accept the unintentionally delayed payment of a maintenance fee for the above-identified patent.

The petition is **GRANTED**.

This patent expired on January 19, 2009, for failure to pay the three and one-half year maintenance fee. Since this petition was submitted within twenty-four months after the six-month grace period provided in 37 CFR 1.362(e), the petition was timely filed under the provisions of 37 CFR 1.378(c).

The maintenance fee is hereby accepted and the above-identified patent is reinstated as of the mail date of this decision.

Telephone inquiries concerning this decision should be directed to Kimberly Inabinet at (571) 272-4618.

The patent file is being forwarded to Files Repository.

Carl Friedman
Petitions Examiner
Office of Petitions

UNITED STATES PATENT AND TRADEMARK OFFICE

COMMISSIONER FOR PATENTS
UNITED STATES PATENT AND TRADEMARK OFFICE
WASHINGTON, DC 20231
www.uspto.gov

MAIL

JUL 1 8 2003

DIRECTOR OFFICE
TECHNOLOGY CENTER 2600

Paper No. 6

MATTINGLY, STANGER & MALUR, P.C.
1800 DIAGONAL ROAD
SUITE 370
ALEXANDRIA VA 22314

In re Application of:
ISHII, TATSUYA
Application No. 09/979,014
Filed: November 15, 2001
For: SOUND GENERATOR AND METHOD FOR MANUFACTURING THE SAME

DECISION ON PETITION TO MAKE SPECIAL

This is a decision on the petition filed June 27, 2003 under Manual of Patent Examination Procedure §708.02, VIII requesting accelerated examination.

The petition under Manual of Patent Examination Procedure §708.02, VIII, must:
(1) be filed prior to receiving any examination by the examiner,
(2) be accompanied by the required fee- $130,
(3) the claims should be directed to a single invention (if it is determined that the claims pertain to more than one invention, then applicant will have to make an election without traverse or forfeit accelerated examination status),
(4) state that a pre-examination search was made, and fully discuss the search method employed, such as classes and subclasses searched, publications, Chemical abstracts, patents, etc. A search made by a foreign patent office satisfies this requirement,
(5) be accompanied by a copy of each of the references most closely related to the subject matter encompassed by the claims if said references are not already of record,
(6) fully discuss the references, pointing out with the particularity required by 37 C.F.R. §1.111(b) and (c), how the claimed subject matter is patentable over the references.

The petition meets all the above-listed requirements. Accordingly, the petition is **GRANTED**.

The application will retain its special status throughout its entire prosecution, including any appeal to the Board of Patent Appeals and Interferences, subject only to diligent prosecution by the applicant. After mailing, the application will be forwarded to the examiner for immediate handling.

Kenneth A. Wieder
Special Program Examiner
Technology Center 2600
(703) 305-4710

UNITED STATES PATENT AND TRADEMARK OFFICE

COMMISSIONER FOR PATENTS
UNITED STATES PATENT AND TRADEMARK OFFICE
P.O. BOX 1450
ALEXANDRIA, VA 22313-1450

JUL 21 2004

MAILED

JUL 21 2004

OFFICE OF THE DIRECTOR
TC 3600

Browdy and Neimark, P.L.L.C.
624 Ninth Street, NW
Suite 300
Washington, DC 20001-5303

In re application of
Klaus Walkhoff
Application No. 09/979,040
Filed: March 18, 2002
For: DEVICE FOR LINKING A SPORTS EQUIPMENT WITH A SHOE

DECISION ON REQUEST FOR WITHDRAWAL OF ATTORNEY

This is a decision on the request filed on April 21, 2004, under 37 CFR 1.36 and MPEP 402.06, requesting permission to withdraw as the attorney of record in the above-identified application.

The request is **NOT APPROVED**.

Under 37 CFR 1.36 an attorney may withdraw only upon application to and approval by the Commissioner. It should be noted that a withdrawal is effective when approved, not when filed. Besides giving due notice to his or her client and delivering to the client all papers and property to which the client is entitled as specified under 37 CFR 10.40, approval of such a request requires that the following conditions be met:

A) Each attorney of record must sign the notice of withdrawal, or the notice must contain a clear indication of one attorney signing on behalf of another, because the Office does not recognize law firms;

B) A proper reason for the withdrawal as enumerated in 37 CFR 10.40(b) or subsection (1)-(6) of 37 CFR 10.40(c) must be provided; and

C) If withdrawal is requested in accordance with 37 CFR 10.40(c) above, there must be at least 30 days between approval of the withdrawal and the later of the expiration date of a time period for reply or the expiration date

of the period which can be obtained by a petition and fee for extension of time under 37 CFR 1.136(a).

The request to withdraw as attorney is not accepted in the above-identified application because the request lacks condition A) above.

As to condition A), the attorneys associated with Customer No. 001444 do not correspond with those named in the Power of Attorney in the declaration thereby creating confusion as to who is withdrawing.

Randolph A. Reese
Special Programs Examiner
Patent Technology Center 3600
(703) 308-2121

RAR/vdb: 7/19/04

UNITED STATES PATENT AND TRADEMARK OFFICE

COMMISSIONER FOR PATENTS
UNITED STATES PATENT AND TRADEMARK OFFICE
WASHINGTON, D.C. 20231
www.uspto.gov

Paper No. 5

SHINJYU GLOBAL IP COUNSELORS
1233 TWENTIETH STREET NW
SUITE 700
WASHINGTON, DC 20036

COPY MAILED

FEB 27 2002

OFFICE OF PETITIONS

In re Application of :
Yoshio Iwasaki et al :
Application No. 09/979,073 :
Filed: November 16, 2001 :
Attorney Docket No. IS-US000181 :

NOTICE

This is a notice regarding your request for acceptance of a fee deficiency submission under 37 CFR 1.28. On September 1, 1998, the Court of Appeals for the Federal Circuit held that 37 CFR 1.28(c) is the sole provision governing the time for correction of the erroneous payment of the issue fee as a small entity. **See DH Technology v. Synergystex International, Inc. 154 F.3d 1333, 47 USPQ2d 1865 (Fed. Cir. Sept. 1, 1998).**

The Office no longer investigates or rejects original or reissue applications under 37 CFR 1.56. **1098 Off. Gaz. Pat. Office 502 (January 3, 1989)**. Therefore, nothing in this Notice is intended to imply that an investigation was done.

Your fee deficiency submission under 37 CFR 1.28 is hereby **ACCEPTED**.

Inquiries related to this communication should be directed to the Office of Petitions Staff at (703) 305-9285.

This file is being forwarded to Initial Patent Examination Division.

Wan Layman
Petitions Examiner
Office of Petitions
Office of the Deputy Commissioner
for Patent Examination Policy

UNITED STATES PATENT AND TRADEMARK OFFICE

COMMISSIONER FOR PATENTS
UNITED STATES PATENT AND TRADEMARK OFFICE
P.O. BOX 1450
ALEXANDRIA, VA 22313-1450
www.uspto.gov

MAR 26 2004

Paper No. 14

In re Application of
Yoshio Iwasaki *et al*
Application No. 09/979,073
Filed: November 16, 2001
Attorney Docket No. IS-US000181

: DECISION ON PETITION

This is a decision on the petition filed on January 30, 2004 by which petitioners request withdrawal of the examiner's holding that this application stands abandoned for failure to file a proper and timely reply to the Office action dated May 2, 2003. The petition is considered pursuant to 37 CFR 1.181, and no fee is required.

The petition is granted.

Petitioners allege that a proper and timely reply to the Office letter in question was in fact filed. Petitioners have supported this allegation by furnishing a copy of the reply, and a copy of a filing receipt for the reply which shows that the reply was in fact received in the Office on May 15, 2003, a date within the period set for filing the reply. Based upon this showing, it is clear that the application is not in fact abandoned.

Accordingly, the Notice of Abandonment is hereby vacated, the holding of abandonment is withdrawn, and the application is restored to pending status. The application is being forwarded to the examiner for action on the reply filed on May 15, 2003.

PETITION GRANTED.

E. Rollins-Cross, Director
Technology Center 3700

Shinjyu Global IP Counselors
1233 Twentieth Street N.W.
Suite 700
Washington, DC 20036

20 JUN 2002

UNITED STATES PATENT AND TRADEMARK OFFICE

COMMISSIONER FOR PATENTS
UNITED STATES PATENT AND TRADEMARK OFFICE
WASHINGTON, D.C. 20231
www.uspto.gov

David K. Benson
Rader, Fishman & Grauer, L.P.P.C
1233 20th Street, N.W., Suite 501
Washington, DC 20036

In re Application of HAN, et al. Application No.: 09/979,077 PCT No.: PCT/JP01/01801 Int. Filing Date: 08 March 2001 Priority Date: 13 March 2000 Attorney Docket No.: SAE-006 For: METHOD FOR MANUFACTURING PHOSPHATE ESTERS	DECISION ON PETITION UNDER 37 CFR 1.137(b)

The petition to revive under 37 CFR 1.137(b) filed 16 November 2001 in the above-captioned application is hereby **GRANTED** as follows:

Applicants' statement that "the entire delay in filing a proper response from the due date for the reply to the filing of this grantable petition was unintentional" meets the requirements of 37 CFR 1.137(b)(3).

A review of the application file reveals that the applicant has submitted the basic national fee of $890.00 and the requirements of 37 CFR 1.137(b) have been satisfied. Therefore, the request to revive the application abandoned under 35 U.S.C. 371(d) is granted as to the National Stage in the United States of America.

This application is being forwarded to the United States Designated/Elected Office (US/DO/EO) for continued processing including the issuance of a Notification of Missing Requirements (Form PCT/DO/EO/905) indicating that an executed oath or declaration of the inventors, payment of the applicable surcharge and payment of the processing fee for providing an English translation of the International Application later than twenty months from the priority date are required.

Derek A. Putonen
Attorney-Advisor
PCT Legal Office
Telephone: (703) 305-0130
Facsimile: (703) 308-6459

UNITED STATES PATENT AND TRADEMARK OFFICE

Commissioner for Patents
United States Patent and Trademark Office
P.O. Box 1450
Alexandria, VA 22313-1450
www.uspto.gov

HUNTON & WILLIAMS LLP
INTELLECTUAL PROPERTY DEPARTMENT
1900 K STREET, N.W.
SUITE 1200
WASHINGTON, DC 20006-1109

COPY MAILED

DEC 16 2004

OFFICE OF PETITIONS

In re Application of	:	
Linda Custer, et al.	:	DECISION ON PETITIONS
Application No. 09/979,096	:	UNDER 37 CFR 1.78(a)(3) AND
Filed: March 11, 2002	:	UNDER 37 CFR 1.78(a)(6)
Attorney Docket No. 031852.0020		

This is a decision on the petitions under 37 CFR §§ 1.78(a)(3) and 1.78(a)(6), filed September 21, 2004, to accept an unintentionally delayed claim under 35 U.S.C. §§120 and § 119(e) for the benefit of the prior-filed applications set forth in the concurrently filed amendment.

The petition is **GRANTED.**

A petition for acceptance of a claim for late priority under 37 CFR §§ 1.78(a)(3) and 1.78(a)(6) is only applicable to those applications filed on or after November 29, 2000. Further, the petition is appropriate only after the expiration of the period specified in 37 CFR §§ 1.78(a)(2)(ii) and 1.78(a)(5)(ii). In addition, the petition under 37 CFR §§ 1.78(a)(3) and 1.78(a)(6) must be accompanied by:

(1) the reference required by 35 U.S.C. §§ 120 and 119(e) and 37 CFR §§ 1.78(a)(2)(i) and 1.78(a)(5)(i) of the prior-filed application, unless previously submitted;

(2) the surcharge set forth in § 1.17(t); and

(3) a statement that the entire delay between the date the claim was due under 37 CFR §§ 1.78(a)(2)(ii) and 1.78(a)(5)(ii) and the date the claim was filed was unintentional. The Commissioner may require additional where there is a question whether the delay was unintentional.

The instant application was filed on March 11, 2002 and was pending at the time of filing of the instant petition. A reference to the prior-filed applications has been included in an amendment to the first sentence of the specification following the title, as required by 37 CFR §§ 1.78(a)(2)(iii) and 1.78(a)(5)(iii).

The instant nonprovisional application was filed after November 29, 2000, and the claim for priority herein is submitted after expiration of the period specified in 37 CFR §§ 1.78(a)(2)(ii) and 1.78(a)(5)(ii). *See* 35 U.S.C. §§ 120 and § 119(e). Accordingly, having found that the instant petition satisfies the conditions of 37 CFR §§ 1.78(a)(3) and 1.78(a)(6) for acceptance of an unintentionally delayed claim for priority under 35 U.S.C. §§ 120 and § 119(e), the petition to accept an unintentionally delayed claim of benefit to the prior-filed applications is granted.

The granting of the petition to accept the delayed benefit claim to the prior-filed applications under 37 CFR §§ 1.78(a)(3) and 1.78(a)(6) should <u>not</u> be construed as meaning that the instant application is entitled to the benefit of the filing date of the prior-filed applications. In order for the instant application to be entitled to the benefit of the prior-filed applications, all other requirements under 35 U.S.C. §120 and 1.78(a)(1) and (a)(2) and under 35 U.S.C. §119(e) and 37 CFR 1.78(a)(4) and (a)(5) must be met. Similarly, the fact that the corrected Filing Receipt accompanying this decision on petition includes the prior-filed applications should <u>not</u> be construed as meaning that applicant is entitled to the claim for benefit of priority to the prior-filed applications noted thereon. Accordingly, the examiner will, in due course, consider this benefit claim and determine whether the instant application is entitled to the benefit of the earlier filing date.

A corrected Filing Receipt, which includes the priority claim to the prior-filed provisional application, accompanies this decision on petition.

Any questions concerning this decision on petition may be directed to Retta Williams at (571) 272-3229.

This application is being forwarded to Technology Center Art Unit 3736 for appropriate action on the amendment submitted on September 21, 2004, including consideration by the examiner of the claim under 35 U.S.C. § §120 and 37 CFR 1.78(a)(2) for the benefit of the prior-filed applications, and for consideration of the claim under 35 U.S.C. §119(e) and 37 CFR 1.78(a)(5) for the benefit of the prior-filed provisional application.

Frances Hicks

Frances Hicks
Petitions Examiner
Office of Petitions
Office of the Deputy Commissioner
for Patent Examination Policy

Attachment: Corrected Filing Receipt

UNITED STATES PATENT AND TRADEMARK OFFICE

Commissioner for Patents
United States Patent and Trademark Office
P.O. Box 1450
Alexandria, VA 22313-1450
www.uspto.gov

Oliff & Berridge
PO Box 19928
Alexandria, VA 22320

Paper No.

COPY MAILED

NOV 03 2004

OFFICE OF PETITIONS

In re Patent No. 6,730,357
Takeo Kawase
Issue Date: May 4, 2004
Application No. 09/979,108
Filed: December 13, 2001
Attorney Docket No. 111142

DECISION ON PETITION

This is a decision on the "PETITION UNDER 37 C.F.R. § 1.183 FOR WAIVER OF THE REQUIREMENTS OF 37 C.F.R. § 3.81," filed August 2, 2004.

Petitioner requests correction of the patent to add as an assignee **Cambridge University Technical Services Limited of The Old Schools.** Petitioner requests correction to identify joint assignees Seiko Epson Corporation and Cambridge University Technical Services Limited of The Old Schools. A Draft Certificate of Correction is enclosed for this purpose.

Petitioner is a proper party in interest. The petition includes a photocopy of the Notice of Recordation of Assignment Document indicating the recordation of Cambridge University Technical Services Limited of The Old Schools as a joint Assignee on Reel/Frame 014021/0767 on May 2, 2003. This was prior to payment of the Issue Fee on March 15, 2004.

The petition is **GRANTED**

The application matured into Patent No. 6,730,357 on May 4, 2004.

Receipt of the $130.00 petition fee and the $100 certificate of correction fee is acknowledged.

The file is being forwarded to the Certificates of Correction Branch for Issuance of the requested Certificate of Correction.

Telephone inquiries concerning this decision should be directed to the undersigned at (571) 272-3219.

Nancy Johnson
Senior Petitions Attorney
Office of Petitions

Under the Paperwork Reduction Act of 1995, no persons are required to respond to a collection of information unless it displays valid OMB control number.

PETITION TO ACCEPT UNINTENTIONALLY DELAYED PAYMENT OF MAINTENANCE FEE IN AN EXPIRED PATENT (37 CFR 1.378(c))

Patent Number	Issue Date (YYYY-MM-DD)	Application Number	Filing Date (YYYY-MM-DD)	Docket Number (if applicable)
6597313	2003-07-22	09979147	2001-11-20	Q67330

CAUTION: Maintenance fee (and surcharge, if any) payment must correctly identify: (1) the patent number and (2) the application number of the actual U.S. application leading to issuance of that patent to ensure the fee(s) is/are associated with the correct patent. 37 CFR 1.366(c) and (d).

SMALL ENTITY
☒ Patentee claims, or has previously claimed, small entity status. See 37 CFR 1.27.

LOSS OF ENTITLEMENT TO SMALL ENTITY STATUS
☐ Patentee is no longer entitled to small entity status. See 37 CFR 1.27(g)

NOT Small Entity		Small Entity	
Fee	Code	Fee	Code
○ 3 ½ year	(1551)	◉ 3 ½ year	(2551)
○ 7 ½ year	(1552)	○ 7 ½ year	(2552)
○ 11 ½ year	(1553)	○ 11 ½ year	(2553)

SURCHARGE
The surcharge required by 37 CFR 1.20(i)(2) (Fee Code 1558) must be paid as a condition of accepting unintentionally delayed payment of the maintenance fee.

MAINTENANCE FEE (37 CFR 1.20(e)-(g))
The appropriate maintenance fee must be submitted with this petition.

STATEMENT
THE UNDERSIGNED CERTIFIES THAT THE DELAY IN PAYMENT OF THE MAINTENANCE FEE TO THIS PATENT WAS UNINTENTIONAL

PETITIONER(S) REQUEST THAT THE DELAYED PAYMENT OF THE MAINTENANCE FEE BE ACCEPTED AND THE PATENT REINSTATED

THIS PORTION MUST BE COMPLETED BY THE SIGNATORY OR SIGNATORIES

37 CFR 1.378(d) states: "Any petition under this section must be signed by an attorney or agent registered to practice before the Patent and Trademark Office, or by the patentee, the assignee, or other party in interest."

I certify, in accordance with 37 CFR 1.4(d)(4) that I am

◉ An attorney or agent registered to practice before the Patent and Trademark Office

○ A sole patentee

○ A joint patentee; I certify that I am authorized to sign this submission on behalf of all the other patentees.

○ A joint patentee; all of whom are signing this e-petition

○ The assignee of record of the entire interest

Patent Practitioner			
A signature of the applicant or representative is required in accordance with 37 CFR 1.33 and 10.18. Please see 37 CFR 1.4(d) for the form of the signature			
Signature	/Nataliya Dvorson/	Date (YYYY-MM-DD)	2007-05-16
Name	Nataliya Dvorson	Registration Number	56616

This collection of information is required by 37 CFR 1.378(c). The information is required to obtain or retain a benefit by the public which is to file (and by the USPTO to process) an application. Confidentiality is governed by 35 U.S.C. 122 and 37 CFR 1.11 and 1.14. This collection is estimated to take 1 hour to complete, including gathering, preparing, and submitting the completed application form to the USPTO. Time will vary depending upon the individual case. Any comments on the amount of time you require to complete this form and/ or suggestions for reducing this burden, should be sent to the Chief Information Officer, U.S. Patent and Trademark Office, U.S. Department of Commerce, P.O. Box 1450, Alexandria, VA 22313-1450. DO NOT SEND FEES OR COMPLETED FORMS TO THIS ADDRESS. **This form can only be used when in conjunction with EFS-Web. If this form is mailed to the USPTO, it may cause delays in reinstating the patent.**

Privacy Act Statement

The Privacy Act of 1974 (P.L. 93-579) requires that you be given certain information in connection with your submission of the attached form related to a patent application or patent. Accordingly, pursuant to the requirements of the Act, please be advised that: (1) the general authority for the collection of this information is 35 U.S.C. 2(b)(2); (2) furnishing of the information solicited is voluntary; and (3) the principal purpose for which the information is used by the U.S. Patent and Trademark Office is to process and/or examine your submission related to a patent application or patent. If you do not furnish the requested information, the U.S. Patent and Trademark Office may not be able to process and/or examine your submission, which may result in termination of proceedings or abandonment of the application or expiration of the patent.

The information provided by you in this form will be subject to the following routine uses:

1. The information on this form will be treated confidentially to the extent allowed under the Freedom of Information Act (5 U.S.C. 552) and the Privacy Act (5 U.S.C. 552a). Records from this system of records may be disclosed to the Department of Justice to determine whether the Freedom of Information Act requires disclosure of these record s.

2. A record from this system of records may be disclosed, as a routine use, in the course of presenting evidence to a court, magistrate, or administrative tribunal, including disclosures to opposing counsel in the course of settlement negotiations.

3. A record in this system of records may be disclosed, as a routine use, to a Member of Congress submitting a request involving an individual, to whom the record pertains, when the individual has requested assistance from the Member with respect to the subject matter of the record.

4. A record in this system of records may be disclosed, as a routine use, to a contractor of the Agency having need for the information in order to perform a contract. Recipients of information shall be required to comply with the requirements of the Privacy Act of 1974, as amended, pursuant to 5 U.S.C. 552a(m).

5. A record related to an International Application filed under the Patent Cooperation Treaty in this system of records may be disclosed, as a routine use, to the International Bureau of the World Intellectual Property Organization, pursuant to the Patent Cooperation Treaty.

6. A record in this system of records may be disclosed, as a routine use, to another federal agency for purposes of National Security review (35 U.S.C. 181) and for review pursuant to the Atomic Energy Act (42 U.S.C. 218(c)).

7. A record from this system of records may be disclosed, as a routine use, to the Administrator, General Services, or his/her designee, during an inspection of records conducted by GSA as part of that agency's responsibility to recommend improvements in records management practices and programs, under authority of 44 U.S.C. 2904 and 2906. Such disclosure shall be made in accordance with the GSA regulations governing inspection of records for this purpose, and any other relevant (i.e., GSA or Commerce) directive. Such disclosure shall not be used to make determinations about individuals.

8. A record from this system of records may be disclosed, as a routine use, to the public after either publication of the application pursuant to 35 U.S.C. 122(b) or issuance of a patent pursuant to 35 U.S.C. 151. Further, a record may be disclosed, subject to the limitations of 37 CFR 1.14, as a routine use, to the public if the record was filed in an application which became abandoned or in which the proceedings were terminated and which application is referenced by either a published application, an application open to public inspections or an issued patent.

9. A record from this system of records may be disclosed, as a routine use, to a Federal, State, or local law enforcement agency, if the USPTO becomes aware of a violation or potential violation of law or regulation.

UNITED STATES PATENT AND TRADEMARK OFFICE

Commissioner for Patents
United States Patent and Trademark Office
P.O. Box 1450
Alexandria, VA 22313-1450
www.uspto.gov

In re Patent No. 6597313
Issue Date: July 22,2003
Application No. 09979147
Filed: November 20,2001
Attorney Docket No. Q67330

:
:DECISION GRANTING PETITION
:UNDER 37 CFR 1.378(c)
:

This is a decision on the electronic petition, filed May 21,2008 ,under 37 CFR 1.378(c) to accept the unintentionally delayed payment of the 3.5 year maintenance fee for the above-identified patent.

The petition is GRANTED.

The maintenance fee is accepted, and the above-identified patent reinstated as of May 21,2008 . This decision also constitutes notice that the fee has been accepted. An electronic copy of the petition and this decision has been created as an entry in an Image File Wrapper. Nevertheless, petitioner should print and retain an independent copy

Telephone inquires related to this electronic decision should be directed to the Electronic Business Center at 1-866-217-9197.

UNITED STATES PATENT AND TRADEMARK OFFICE

Commissioner for Patents
United States Patent and Trademark Office
P.O. Box 1450
Alexandria, VA 22313-1450
www.uspto.gov

WOODCOCK WASHBURN
ONE LIBERTY PLACE, 46TH FLOOR
1650 MARKET STREET
PHILADELPHIA, PA 19103

COPY MAILED

APR 2 9 2005

OFFICE OF PETITIONS

In re Application of	:	
Koenraad Lodewijk August Van Acker et al	:	
Application No. 09/979,170	:	ON PETITION
Filed: March 4, 2002	:	
Attorney Docket No. 07619.0026	:	

This is a decision on the petition under 37 CFR 1.137(b), filed March 17, 2005, to revive the above-identified application.

The petition is **DISMISSED**.

Any request for reconsideration of this decision must be submitted within TWO (2) MONTHS from the mail date of this decision. Extensions of time under 37 CFR 1.136(a) are permitted. The reconsideration request should include a cover letter entitled "Renewed Petition under 37 CFR 1.137(b)." No additional fee is required with any renewed petition. Petitioner is advised that this is **not** a final agency action decision.

The above-identified application became abandoned for failure to reply in a timely manner to the non-final Office action mailed June 3, 2004, which set a shortened statutory period for reply of one (1) month. A one (1) month extension of time under the provisions of 37 CFR 1.136(a) was obtained. Accordingly, the above-identified application became abandoned on August 4, 2004.

A grantable petition to revive an abandoned application under 37 CFR 1.137(b) must be accompanied by: (1) the required reply (unless previously filed), which may met by the filing of a continuing application in a nonprovisional application abandoned for failure to prosecute, but must be the payment of the issue fee or any outstanding balance thereof in an application or patent, abandoned or lapsed for failure to pay the issue fee or any portion thereof; (2) the petition fee as set forth in 37 CFR 1.17(m); (3) a statement that the entire delay in filing the required reply from the due date for the reply until the filing of a grantable petition pursuant to 37 CFR 1.137(b) was unintentional; and (4) any terminal disclaimer (and fee as set forth in 37 CFR 1.20(d)). This petition lacks item (1) above.

As to item (1), the amendment filed on March 17, 2005 has been reviewed by examiner G. Nickol. He determined that said amendment "is **NOT** fully responsive to the prior actions because: while

the proposed amendment to Claim 6 appears to obviate the problems associated with the letter mailed June 3, 2004, applicants to not clearly state for the record which species they are electing. Applicants only elect, 'with travers, Group III consisting of claims, and 6-10, for prosecution at this time' (see page 9 of Response). This is non-responsive because it cannot be assumed that applicant's original election of species would be re-instated due to the changes in the claims. Thus, the record would remain unclear as to the election of species." Therefore, the petition cannot be granted until a proper reply submitted.

Further correspondence with respect to this matter should be addressed as follows:

By mail: Mail Stop PETITIONS
Commissioner for Patents
Post Office Box 1450
Alexandria, VA 22313-1450

By hand: Customer Service Window
Randolph Building
401 Dulany Street
Alexandria, VA 22314

By fax: (703) 872-9306
ATTN: Office of Petitions

Telephone inquiries concerning this decision should be directed to Wan Laymon at (571) 272-3220.

Wan Laymon

Wan Laymon
Petitions Examiner
Office of Petitions
Office of the Deputy Commissioner
for Patent Examination Policy

UNITED STATES PATENT AND TRADEMARK OFFICE

Commissioner for Patents
United States Patent and Trademark Office
P.O. Box 1450
Alexandria, VA 22313-1450
www.uspto.gov

WOODCOCK WASHBURN
ONE LIBERTY PLACE, 46TH FLOOR
1650 MARKET STREET
PHILADELPHIA, PA 19103

COPY MAILED

JUN 15 2005

OFFICE OF PETITIONS

In re Application of	:	
Koenraad Lodewijk August Van Acker et al	:	
Application No. 09/979,170	:	ON PETITION
Filed: March 4, 2002	:	
Attorney Docket No. 07619.0026	:	

This is a decision on the renewed petition under 37 CFR 1.137(b), filed May 12, 2005, to revive the above-identified application.

The petition is **GRANTED**.

The second petition fee of $1,500 is unnecessary and will be credited to petitioner's deposit account in due course.

Telephone inquiries concerning this decision should be directed to Wan Laymon at (571) 272-3220.

This matter is being referred to Technology Center AU 1653.

Wan Laymon
Petitions Examiner
Office of Petitions
Office of the Deputy Commissioner
for Patent Examination Policy

UNITED STATES PATENT AND TRADEMARK OFFICE

UNITED STATES DEPARTMENT OF COMMERCE
United States Patent and Trademark Office
Address: COMMISSIONER FOR PATENTS
P.O. Box 1450
Alexandria, Virginia 22313-1450
www.uspto.gov

AVAYA INC.
MARGARET CARMICHAEL, DOCKETING SPECIALIST
1300 W. 120TH AVENUE
ROOM B1-F53
WESTMINSTER, CO 80234

Mail Date: 04/21/2010

Applicant	: Joann J Ordille	: DECISION ON REQUEST FOR
Patent Number	: 7660830	: RECALCULATION of PATENT
Issue Date	: 02/09/2010	: TERM ADJUSTMENT IN VIEW
Appliction No	: 09/979,197	: OF WYETH AND NOTICE OF INTENT TO
Filed	: 11/20/2001	: ISSUE CERTIFICATE OF CORRECTION
		:

The Request for Recalculation is **GRANTED** to the extent indicated.

The patent term adjustment has been determined to be **2122** days. The USPTO will *sua sponte* issue a certificate of correction reflecting the amount of PTA days determined by the recalculation.

Prior to the issuance of the certificate of correction, the USPTO will afford patentee an opportunity to be heard and request reconsideration. Accordingly, patentee has **one month or thirty (30) days**, whichever is longer, to file a request for reconsideration of this patent term adjustment calculation. See 35 U.S.C. 154(b)(3)(B)(ii) and 37 CFR 1.322(a)(4). No extensions of time will be granted under 37 CFR 1.136.

Patentee should use document code PET.OP if electronically filing a request for reconsideration of this patent term adjustment calculation. The patentee must also include the information required by 37 CFR 1.705(b)(2) and the fee required by 37 CFR 1.18(e). If patentee does not file a timely request for reconsideration of this patent term adjustment calculation including the information required by 37 CFR 1.705(b)(2) and the fee required by 37 CFR 1.18(e), the USPTO will issue a certificate of correction reflecting the PTA determination noted above.

Patentee should be aware that in order to preserve the right to review in the United States District Court for the District of Columbia of the USPTO patent term adjustment determination, patentee must ensure that he or she also take the steps required under 35 U.S.C. 154(b)(4)(A) in a timely manner. Nothing in the request for recalculation should be construed as providing an alternative time frame for commencing a civil action under 35 U.S.C. 154(b)(4)(A).

Any questions concerning this decision should be directed to the Office of Patent Legal Administration at 571-272-7702.

OK TO ENTER: /M.A./

Atty. Dkt. No. 026032-3859

IN THE UNITED STATES PATENT AND TRADEMARK OFFICE

Applicant: Todd R. WITKOWSKI et al.

Title: WIRELESS COMMUNICATIONS SYSTEM AND METHOD

Patent. No.: 7,257,426

Issue Date: 8/14/2007

Examiner: Lewis G. West

Art Unit: 2618

Conf. No.: 1150

REQUEST FOR CERTIFICATE OF CORRECTION
PURSUANT TO 37 C.F.R. § 1.323

ATTENTION: Certificate of Corrections Branch
Commissioner for Patents
P.O. Box 1450
Alexandria, VA 22313-1450

Sir:

Enclosed is a Certificate of Correction, Form PTO-SB/44, for United States Patent Number 7,257,426 issued August 14, 2007.

IN THE SPECIFICATION

Column 12, line 35, delete "car".

Column 12, line 42, delete "transducer" and insert --transceiver--.

Column 13, line 7, delete "10b" and insert --10a--.

Column 15, line 9, delete "100" and insert --101--.

Column 15, line 11, delete "100" and insert --101--.

Column 15, line 12, delete "100" and insert --101--.

ALL REFERENCES CONSIDERED EXCEPT WHERE LINED THROUGH. /M.A./

Column 15, line 17, delete "100" and insert --101--.

Column 15, line 26, delete "100" and insert --101--.

Column 15, line 47, delete "14".

Column 15, line 65, delete "100" and insert --101--.

Column 16, line 13, delete "104" and insert --14--.

IN THE CLAIMS

Claim 1, (Column 17, line 9) delete "audio" and insert --audible--.

Claim 2, (Column 17, line 12) delete "the" and insert --a--.

Claim 10, (Column 17, line 52) delete "a" and insert --the--.

Claim 11, (Column 17, line 56) delete "the" and insert --a--.

Claim 15, (Column 18, line 2) delete "audio" and insert --audible--.

Claim 20, (Column 18, line 42) delete "receiver" and insert --transceiver--.

Claim 21, (Column 18, line 45) delete "receiver" and insert --transceiver--.

Applicants submit that the mistakes sought to be corrected are of clerical nature, typographical nature, or mistakes of minor character.

Applicants submit that the noted errors do not constitute new matter, and correction thereof would not require reexamination.

Pursuant to 37 C.F.R. §1.323, Applicant requests that the enclosed Certificate of Correction be approved.

ALL REFERENCES CONSIDERED EXCEPT WHERE LINED THROUGH. /M.A./

Atty. Dkt. No. 026032-3859

Since at least one of the noted errors is not the fault of the Patent Office, payment of the required fee of $100.00 is being paid by credit card via EFS-Web. The Commissioner is hereby authorized to charge any additional fees which may be required for this Request, to Deposit Account No. 19-0741.

Respectfully submitted,

Date August 21, 2007

By / Karl F. Reichenberger /

FOLEY & LARDNER LLP
Customer Number: 26371
Telephone: (414) 319-7347
Facsimile: (414) 297-4900

Karl F. Reichenberger
Attorney for Applicant
Registration No. 60,726

ALL REFERENCES CONSIDERED EXCEPT WHERE LINED THROUGH. /M.A./

MODIFIED PTO/SB/44 (04-05)
Approved for use through 04/30/2007. OMB 0651-0033
U.S. Patent and Trademark Office; U.S. DEPARTMENT OF COMMERCE
Under the Paperwork Reduction Act of 1995, no persons are required to respond to a collection of information unless it displays a valid OMB control number.
(Also Form PTO-1050)

UNITED STATES PATENT AND TRADEMARK OFFICE

CERTIFICATE OF CORRECTION

PATENT NO. : 7,257,426

APPLICATION NO. : 09/979,199 Page 1 of 2

DATED : 08/14/2007

INVENTOR(S) : Todd R. WITKOWSKI; Kurt A. DYKEMA; Steven L. GEERLINGS; Mark L. ZEINSTRA;

It is certified that an error appears or errors appear in the above-identified patent and that said Letters Patent is hereby corrected as shown below:

IN THE SPECIFICATION:

Column 12, line 35, delete “car”.

Column 12, line 42, delete “transducer” and insert --transceiver--.

Column 13, line 7, delete “10b” and insert --10a--.

Column 15, line 9, delete “100” and insert --101--.

Column 15, line 11, delete “100” and insert --101--.

Column 15, line 12, delete “100” and insert --101--.

Column 15, line 17, delete “100” and insert --101--.

Column 15, line 26, delete “100” and insert --101--.

Column 15, line 47, delete “14”.

Column 15, line 65, delete “100” and insert --101--.

Column 16, line 13, delete “104” and insert --14--.

MAILING ADDRESS OF SENDER (Please do not use customer number below):
Foley & Lardner LLP
777 E Wisconsin Avenue
Milwaukee, Wisconsin 53202-5306

This collection of information is required by 37 CFR 1.322, 1.323, and 1.324. The information is required to obtain or retain a benefit by the public which is to file (and by the USPTO to process) an application. Confidentiality is governed by 35 U.S.C. 122 and 37 CFR 1.14. This collection is estimated to take 1.0 hour to complete, including gathering, preparing, and submitting the completed application form to the USPTO. Time will vary depending upon the individual case. Any comments on the amount of time you require to complete this form and/or suggestions for reducing this burden, should be sent to the Chief Information Officer, U.S. Patent and Trademark Office, U.S. Department of Commerce, P.O. Box 1450, Alexandria, VA 22313-1450. DO NOT SEND FEES OR COMPLETED FORMS TO THIS ADDRESS. SEND TO: **Attention Certificate of Corrections Branch, Commissioner for Patents, P.O. Box 1450, Alexandria, VA 22313-1450.**

If you need assistance in completing the form, call 1-800-PTO-9199 and select option 2.

MILW_2572590.1

IN THE CLAIMS:

Claim 1, (Column 17, line 9) delete “audio” and insert --audible--.

Claim 2, (Column 17, line 12) delete “the” and insert --a--.

Claim 10, (Column 17, line 52) delete “a” and insert --the--.

Claim 11, (Column 17, line 56) delete “the” and insert --a--.

Claim 15, (Column 18, line 2) delete “audio” and insert --audible--.

Claim 20, (Column 18, line 42) delete “receiver” and insert --transceiver--.

Claim 21, (Column 18, line 45) delete “receiver” and insert --transceiver--.

MAILING ADDRESS OF SENDER (Please do not use customer number below):
Foley & Lardner LLP
777 E Wisconsin Avenue
Milwaukee, Wisconsin 53202-5306

This collection of information is required by 37 CFR 1.322, 1.323, and 1.324. The information is required to obtain or retain a benefit by the public which is to file (and by the USPTO to process) an application. Confidentiality is governed by 35 U.S.C. 122 and 37 CFR 1.14. This collection is estimated to take 1.0 hour to complete, including gathering, preparing, and submitting the completed application form to the USPTO. Time will vary depending upon the individual case. Any comments on the amount of time you require to complete this form and/or suggestions for reducing this burden, should be sent to the Chief Information Officer, U.S. Patent and Trademark Office, U.S. Department of Commerce, P.O. Box 1450, Alexandria, VA 22313-1450. DO NOT SEND FEES OR COMPLETED FORMS TO THIS ADDRESS. SEND TO: **Attention Certificate of Corrections Branch, Commissioner for Patents, P.O. Box 1450, Alexandria, VA 22313-1450.**

If you need assistance in completing the form, call 1-800-PTO-9199 and select option 2.

ALL REFERENCES CONSIDERED EXCEPT WHERE LINED THROUGH. /M.A./

27 MAY 2008

UNITED STATES PATENT and TRADEMARK OFFICE

COMMISSIONER FOR PATENTS
UNITED STATES PATENT AND TRADEMARK OFFICE
P.O BOX 1450
ALEXANDRIA, VA 22313-1450
www.uspto.gov

Henry Tang
BAKER BOTTS LLP
30 Rockefeller Plaza
New York, NY 10112-0228

In re Application of	:	
IM et al	:	
Application No.: 09/979,201	:	
PCT No.: PCT/US00/07479	:	
Int. Filing Date: 21 March 2000	:	DECISION
Priority Date: N/A	:	
Attorney's Docket No.: 070050.1611	:	
For: SURFACE PLANARIZATION... METHOD	:	

This is in response to petitioner's "PETITION UNDER 37 CFR 1.28(c)," filed on 12 May 2008 requesting to pay the deficiency amount owed because the above patent application was erroneously filed as a small entity status.

A review of the petition indicates that the above patent application was erroneously filed as a small entity status and is deficient by 1042.00.

Accordingly, petitioner will be charged $1042.00 under 37 CFR 1.28 to the Deposit Account No.: 02-4377.

CONCLUSION

For reasons above, the petition is **GRANTED**.

The required fee of $1042.00 has been charged to Deposit Account No.: 02-4377 as authorized in the petition submitted on 12 May 2008.

Rafael Bacares
PCT Legal Examiner
PCT Legal Office
Tel: (571) 272-3276
Fax: (571) 273-0459

UNITED STATES PATENT AND TRADEMARK OFFICE

COMMISSIONER FOR PATENTS
UNITED STATES PATENT AND TRADEMARK OFFICE
P.O. BOX 1450
ALEXANDRIA, VA 22313-1450
www.uspto.gov

NXP, B.V.
NXP INTELLECTUAL PROPERTY DEPARTMENT
M/S41-SJ
1109 MCKAY DRIVE
SAN JOSE CA 95131

COPY MAILED

DEC 11 2007

OFFICE OF PETITIONS

In re Application of	:
Brunel	: DECISION ON PETITION
Application No. 09/979,227	:
For: November 19, 2001	:
Atty. Dkt. No.: FR 000026	:

This is a decision on the petition under 37 CFR 1.137(a) to revive the above-identified application filed October 4, 2007. This petition is, sua sponte, being treated under 37 CFR 1.181 as a petition to withdraw the holding of abandonment.

The petition under 37 CFR 1.137(a) is **DISMISSED AS MOOT**.

The petition under 37 CFR 1.181 is hereby **GRANTED**.

The application was held abandoned for failure to timely reply to the Notice of Allowance (Notice) mailed May 25, 2007. The Notice set a three (3) month statutory period of time for reply. Notice of Abandonment was mailed October 24, 2007.

DECISION UNDER 37 CFR 1.181

Petitioner alleges non-receipt of the Notice and further state that the Notice was returned to the USPTO by the USPS. Petitioner states he became that the application was held abandoned on October 3, 2007.

A review of the record reveals that the Notice was properly addressed to the correspondence address of record, but that the Notice was returned to sender as undeliverable by the USPS, with an indication that the USPS was unable to read recipient's address.

In view of the petition and supporting evidence, it is concluded that the Notice was not received. In view of the evidence presented, the petition to withdraw the holding of abandonment is hereby **GRANTED**.

The Notice of Abandonment is hereby **VACATED** and the holding of abandonment is **WITHDRAWN**.

DECISION UNDER 37 CFR 1.137(a)

A grantable petition under 37 CFR 1.137(a) requires (1) the required reply, unless previously filed; (2) the petition fee as set forth in 37 CFR 1.17(l); (3) a showing to the satisfaction of the Director that the entire delay in filing the required reply from the due date for the reply until the filing of a grantable petition pursuant to 37 CFR 1.137(a) was unavoidable; and (4) any terminal disclaimer (and fee as set forth in 37 CFR 1.20(d)) required pursuant to 37 CFR 1.137(c).

In view of the preceding withdrawal of the holding of abandonment, the petition under 37 CFR 1.137(a) is hereby **DISMISSED AS MOOT**.

A refund of the previously submitted petition fee will issue in due course.

This application will be forwarded to the Office of Patent Publications for further processing.

Telephone inquiries concerning this matter may be directed to the undersigned at (571) 272-3205.

Alesia M. Brown
Petitions Attorney
Office of Petitions

UNITED STATES PATENT AND TRADEMARK OFFICE

COMMISSIONER FOR PATENTS
UNITED STATES PATENT AND TRADEMARK OFFICE
P.O. BOX 1450
ALEXANDRIA, VA 22313-1450
www.uspto.gov

WOLF BLOCK SCHORR AND SOLIS-COHEN LLP
250 PARK AVENUE
NEW YORK, NY 10177

COPY MAILED
NOV 19 2007
OFFICE OF PETITIONS

In re Application of
Angel Jose Ferre Herrero
Application No. 09/979,229
Filed: November 19, 2001
Attorney Docket No. 932.1203

ON PETITION

This is a decision in response to the petition, filed July 18, 2007, to revive the above-identified application under the provisions of 37 CFR 1.137(b).

The petition is **GRANTED**.

The application became abandoned for a failure to reply in a timely manner to a non-final Office action mailed January 12, 2007. This decision precedes the mailing of a Notice of Abandonment.

The petition satisfies the conditions for revival pursuant to the provisions of 37 CFR 1.137(b) in that petitioner has supplied (1) the reply in the form of an amendment; (2) the petition fee of $750; and (3) an adequate statement of unintentional delay.

The application is being referred to Technology Center AU 2137 for consideration of the amendment filed July 18, 2007.

Telephone inquiries concerning this decision should be directed to the undersigned at (571) 272-3204. Inquiries relating to further prosecution should be directed to the Technology Center.

Sherry D. Brinkley
Petitions Examiner
Office of Petitions

SPE RESPONSE FOR CERTIFICATE OF CORRECTION

Paper No.: ___

DATE : 2/4/08

TO SPE OF : ART UNIT 2611

SUBJECT : Request for Certificate of Correction for Appl. No.: 9/979254 Patent No: 7054403 B2

A response is requested with respect to a request for a certificate of correction.

With respect to the change(s) requested to correct Office and/or Applicant's errors, should the patent read as shown in the certificate of correction attached herewith or the COCIN document(s), in IFW images for the above-identified patented application? No new matter should be introduced, nor should the scope or meaning of the claims be changed.

If the response is for an IFW, within 7 days, please complete and forward the response, to the employee (named below) via scanning into application images, using document code **COCX**.

If the response is for a paper file wrapper, please complete the response and forward the response with the paper file wrapper, to the employee (named below), within 7 days, to:

Certificates of Correction Branch (CofC)
South Tower - 9A22
Palm Location 7580

VIRGINIA TOLBERT
Certificates of Correction Branch
703-308-9390 ext. 113

Thank You For Your Assistance

The request for issuing the above-identified correction(s) is hereby:
Note your decision on the appropriate box.

- [x] **Approved** — All changes apply.
- [ ] **Approved in Part** — Specify below which changes **do not** apply.
- [ ] **Denied** — State the reasons for denial below.

Comments: _____

SPE — Art Unit 2611

UNITED STATES PATENT AND TRADEMARK OFFICE

UNDER SECRETARY OF COMMERCE FOR INTELLECTUAL PROPERTY AND
DIRECTOR OF THE UNITED STATES PATENT AND TRADEMARK OFFICE
WASHINGTON, DC 20231
www.uspto.gov

FEB -6 2003

Paper No. 7

In re Application of	:	
Bernard Lerner et al.	:	
Serial No. 09/979,256	:	DECISION ON PETITION
Filed: March 28, 2002	:	TO MAKE SPECIAL
For: DUNNAGE MATERIAL AND PROCESS	:	

Applicant's petition, filed November 20, 2001, has only recently been found in the application and forwarded to the undersigned for action. Applicant requests that this application be rendered special for examination in that applicant is over sixty-five (65) years of age.

The petition has been reviewed and is found to be in compliance with the requirements for special status as set forth in Section 708.02(IV) of the Manual of Patent Examining Procedure (MPEP).

PETITION GRANTED.

E. Rollins-Cross, Director
Technology Center 3700

Watts, Hoffman, Fisher and Heinke Co. LPA
1100 Superior Avenue, Suite 1750
Cleveland, OH 44114

UNITED STATES PATENT AND TRADEMARK OFFICE

COMMISSIONER FOR PATENTS
UNITED STATES PATENT AND TRADEMARK OFFICE
P.O. BOX 1450
ALEXANDRIA, VA 22313-1450
www.uspto.gov

FEB 10 2004

Paper No. 12

In re Application of
Bernard Lerner *et al*
Application No. 09/979,256
Filed: March 28, 2002
Attorney Docket No. 15-060P/US

: DECISION ON PETITION

This is a decision on the petition filed on January 21, 2004 by which petitioners request supervisory review and modification of the restriction requirement promulgated on November 18, 2003. The petition is considered pursuant to 37 CFR 37 CFR 1.144 and 1.181, and no fee is required.

The petition is granted.

Petitioners have requested a modification to certain aspects of the restriction requirement in question. However, a review of the file shows that this application was filed pursuant to 35 USC § 371. However, the restriction requirement was promulgated under 35 USC § 121. See 37 CFR 1.499 as reproduced in MPEP § 1893.03(d). It is noted that MPEP § 1893.03(d) states, *inter alia*:

> Examiners are reminded that unity of invention (not restriction) practice is applicable in international applications (both Chapter I and II) **and in national stage applications submitted under 35 USC § 371. (Emphasis supplied.)**

As the entire restriction requirement is improper under 37 CFR 1.499, it is hereby withdrawn.

Accordingly, this application is being first forwarded to the Supervisory Applications Examiner to:

1. Physically endorse into the application file the Amendment before Office Action;

2. Enter the Amendment To Add Claims filed on January 21, 2004; and

3. Change the correspondence address in the PALM system to agree precisely with the address as it reads at the bottom of this decision.

Thereafter, the application will be forwarded to the Supervisory Patent Examiner for Art Unit 3721 who will assist the examiner in considering whether there is a proper Lack of Unity of Invention requirement that applies to the application claims as amended. Further action may then be taken that is not inconsistent with this decision.

PETITION GRANTED.

E. Rollins-Cross, Director
Technology Center 3700

Watts Hoffmann Fisher & Heinke Co. L.P.A.
1100 Superior Avenue
Suite 1750
Cleveland, OH 44114

14 NOV 2002

UNITED STATES PATENT AND TRADEMARK OFFICE

COMMISSIONER FOR PATENTS
UNITED STATES PATENT AND TRADEMARK OFFICE
WASHINGTON, D.C. 20231
www.uspto.gov

Guy D. Yale
ALIX, YALE & RISTAS, L.L.P.
750 Main Street
Hartford, Connecticut 06103-2721

In re Application of	:	
Alexey Vladimirovich VERYASKIN	:	
Application No.: 09/979,291	:	
PCT No.: PCT/EP00/04270	:	COMMUNICATION
Int. Filing Date: 11 May 2000	:	
Priority Date: 11 May 1999	:	
Attorney Docket No.: DHN/318/PC/US	:	
For: MEASUREMENT OF MAGNETIC FIELDS USING A STRING FIXED AT BOTH ENDS	:	

This communication is to inform applicant that due to an applicant's initiated error in the filing of national stage papers of international application PCT/EP00/04652, Forms PCT/DO/EO/909 and PCT/DO/EO/908 were successively issued on 09 January 2002 and 18 June 2002 in the above-captioned application.

Applicant is hereby notified that the national stage papers of PCT/EP00/004270 filed 09 November 2001 had been assigned serial number 09/979,291 and that all papers pertaining to international application PCT/EP00/04652 have been removed from the present file. Applicant should use serial number 09/979,291 in all future correspondence with the Office pertaining to the national stage papers of PCT/EP00/004270.

The application is being returned to the DO/EO/US for further processing.

Leonard E. Smith
PCT Legal Examiner
PCT Legal Office

Nguyên Ngoc-Hô
Paralegal Specialist
PCT Legal Office

NNH/LES:hn

Tel: (703) 308-6508

JAN 04 2002

UNITED STATES PATENT AND TRADEMARK OFFICE

#3

Commissioner for Patents
United States Patent and Trademark Office
Washington, D.C. 20231
www.uspto.gov

Anthony Niewyk
Baker & Daniels
111 East Wayne Street, Suite 800
Fort Wayne, IN 46802

In re Application of HOMMEL et al
U.S. Application No.:09/979,298
Int. Application No.: PCT/DE00/01587
Int. Filing Date: 19 May 2000
Priority Date: 19 May 1999
Attorney Docket No.: BOS0061
For: CONTROL SYSTEM WHICH CARRIES OUT THE MODEL-SUPPORTED SAFETY MONITORING OF AN ELECTRONICALLY REGULATED CONTROLLER IN THE MOTOR VEHICLE

DECISION

This is in response to applicants' "Letter" filed 20 November 2001, requesting that the accompanying national stage papers be accorded a filing date of 19 November 2001.

BACKGROUND

On 19 May 2000, applicants filed international application PCT/DE00/01587, which claimed priority of an earlier Germany application filed 19 May 1999. A copy of the international application was communicated to the USPTO from the International Bureau on 30 November 2000. A Demand for international preliminary examination, in which the United States was elected, was filed on 04 November 2000, prior to the expiration of nineteen months from the priority date. Accordingly, the thirty-month period for paying the basic national fee in the United States expired at midnight on 19 November 2001.

On 20 November 2001, applicants filed national stage papers in the United States. The submission was accompanied by, *inter alia*, the basic national fee required by 35 U.S.C. 371(c)(1) and the present request to accord the national stage papers a filing date of 19 November 2001.

DISCUSSION

37 CFR 1.6(e) provides:

> If interruptions or emergencies in the United States Postal Service which have been so designated by the Commissioner occur, the Patent and Trademark Office will

> consider as filed on a particular date in the Office any correspondence which is: (1) promptly filed after the ending of the designated interruption or emergency; and (2) accompanied by a statement indicating that such correspondence would have been filed on that particular date if it were not for the designated interruption or emergency in the United States Postal Service.

In the present case, applicant has satisfied the requirements of 37 CFR 1.6(e). Specifically, on 13 September 2001, the USPTO designated the refusal of certain post offices to accept the deposit of mail for delivery by Express Mail as a postal service interruption and emergency within the meaning of 35 U.S.C. 21(a). The request states that the USPS office in Fort Wayne, Indiana refused to accept Express Mail deposits on 19 November 2001, and thus applicant was subject to a designated postal service interruption and emergency on 19 November 2001. Furthermore, the present national stage application papers were promptly filed with respect to the designated postal service interruption and emergency. In addition, the request sufficiently establishes that the application papers would have been deposited in Express Mail on 19 November 2001 if it were not for the designated postal service interruption and emergency.

CONCLUSION

For the reasons above, the request is GRANTED.

This application is being forwarded to the United States Designated/Elected Office (DO/EO/US) for further processing in accordance with this decision including: 1) according the following papers filed 20 November 2001 an original filing date of 19 November 2001: Transmittal Letter (Form PTO-1390), basic national fee, translation of the International Application, preliminary amendment, copy of the International Preliminary Examination Report (Form PCT/IPEA/409), copy of the International Search Report (Form PCT/ISA/210), copy of PCT Request (Form PCT/RO/101), copy of PCT Demand (PCT/IPEA/401), and copy of certificate of translation, and 2) preparation and mailing of a Notification of Missing Requirements under 35 U.S.C. 371 (Form PCT/DO/EO/905) indicating that an oath or declaration in compliance with 37 CFR 1.497 and the appropriate surcharge under 37 CFR 1.492(e) must be filed.

Bryan Tung
PCT Legal Examiner
PCT Legal Office

Telephone: 703-308-6614
Facsimile: 703-308-6459

10 JUL 2002

UNITED STATES PATENT AND TRADEMARK OFFICE

COMMISSIONER FOR PATENTS
UNITED STATES PATENT AND TRADEMARK OFFICE
WASHINGTON, D.C. 20231
www.uspto.gov

Dennison, Scheiner & Schultz
612 Crystal Square 4
1745 Jefferson Davis Highway
Arlington, VA 22202-3417

In re Application of	:	
KRISTOFFERSEN, Bjorn	:	
U.S. Application No.: 09/979,304	:	DECISION ON PETITION
PCT No.: PCT/NO00/00174	:	
International Filing Date: 25 May 2000	:	
Priority Date: 25 May 1999	:	
Attorney's Docket No.: 01208	:	
For: ELECTRICAL MACHINE	:	

This decision is issued in response to the "Request For Change Of Inventorship" filed 22 March 2002. No petition fee is required.

BACKGROUND

On 25 May 2000, applicant filed international application PCT/NO00/00174 which claimed a priority date of 25 May 1999 and which designated the United States. On 14 December 2000, a copy of the international application was communicated to the United States Patent and Trademark Office ("USPTO") by the International Bureau ("IB").

On 22 December 2000, a Demand was filed with the International Preliminary Examining Authority electing the United States. The election was made prior to the expiration of 19 months from the priority date. As a result, the deadline for submission of the basic national fee was extended to expire thirty months from the priority date, i.e., 26 November 2001 (25 November 2001 was a Sunday).

The published international application identified Jon LODE, Einar VIK, Kjetil SOLBAKKEN and Bjorn KRISTOFFERSEN as applicant/inventors for the United States. However, as confirmed in the "Notification Of The Recording Of A Change" (Form PCT/IB/306) mailed on 16 July 2001 by the IB, Jon LODE, Einar VIK, and Kjetil SOLBAKKEN were subsequently withdrawn as applicants, leaving Bjorn KRISTOFFERSEN as the sole applicant/inventor for the United States.

On 21 November 2001, applicant filed a transmittal letter for entry into the national stage in the United States accompanied by, among other materials, payment of the small entity basic national fee.

On 03 January 2002, the United States Designated/Elected Office (DO/EO/US) mailed a Notification Of Missing Requirements indicating that an oath or declaration in compliance with

37 CFR 1.497 was required. The Notification also informed applicant that the failure to submit the declaration within two months of the date of the Notification would result in abandonment of the application.

On 22 March 2002, applicant filed a "Response To Notification Of Missing Requirements" accompanied by, among other materials, the "Request For Change Of Inventorship" considered herein, a petition/fee for a one month extension of time, and a declaration executed by Bjorn KRISTOFFERSEN.

DISCUSSION

The "Request For Change Of Inventorship" seeks to correct the inventorship of this application by removing Jon LODE, Einar VIK, and Kjetil SOLBAKKEN, leaving Bjorn KRISTOFFERSEN as the sole applicant. As noted above, the Form PCT/IB/306 mailed 16 July 2001 confirms that this change in the inventors has already been accomplished during the international stage. Because the sole applicant in this application is already Bjorn KRISTOFFERSEN, applicant's "Request For Change Of Inventorship" is moot. See 37 CFR 1.41(a)(4).

The declaration filed on 22 March 2002 and executed by Bjorn KRISTOFFERSEN complies with 37 CFR 1.497 and, based on the one month extension of time, is considered a timely response to the Notification Of Missing Requirements.

CONCLUSION

Applicant's "Request For Change Of Inventorship" is **MOOT**.

The sole applicant on the present national stage application is Bjorn KRISTOFFERSEN.

This application is being forwarded to the National Stage Processing Branch of the Office of PCT Operations for further processing in accord with this decision. The 35 U.S.C. 371 date is 22 March 2002.

Boris Milef
PCT Legal Examiner
PCT Legal Office

Richard M. Ross
PCT Petitions Attorney
PCT Legal Office
Telephone: (703) 308-6155
Facsimile: (703) 308-6459

RMR/BM:rmr

JAN 0 9 2002

UNITED STATES PATENT AND TRADEMARK OFFICE

COMMISSIONER FOR PATENTS
UNITED STATES PATENT AND TRADEMARK OFFICE
WASHINGTON, D.C. 20231
www.uspto.gov

#3

Ernest F. Chapman
Finnegan Henderson, LLP
1300 I Street, N.W.
Washington, D.C. 20005-3315

In re Application of
PEDRAZZI, et al.
Application No.: 09/979,307
PCT No.: PCT/IB01/00027
Int. Filing Date: 12 January 2001
Priority Date: 12 January 2000
Attorney Docket No.: 02508.0094
For: METHOD FOR EMPTYING A BLOOD CIRCUIT OF AN APPARATUS FOR THE EXTRA-CORPOREAL TREATMENT OF BLOOD

DECISION ON PETITION

UNDER 37 CFR 1.137(b)

This is in response to applicant's, "Petition to Revive an Application Abandoned For Failure to Pay Filing Fee" filed 21 November 2001 in the United States Patent and Trademark Office (USPTO). Applicant included the $1280.00 petition fee.

BACKGROUND

On 12 January 2001, applicant filed international application PCT/IB01/00027, which claimed priority of an earlier application filed 12 January 2000. 07 October 1998. A copy of the international application was communicated to the United States Patent and Trademark Office from the International Bureau on 19 July 2001. A Demand for international preliminary examination, in which the United States was elected, was not filed prior to the expiration of nineteen months from the priority date. Accordingly, the twenty-month period for paying the basic national fee in the United States expired at midnight on 12 September 2001.

On 13 September 2001, the application became abandoned for failure to pay the basic national fee for a U.S. national stage entry application.

On 21 November 2001, applicant filed the present petition accompanied by: a check for $1300.00 (890.00 as payment for the basic national fee, $130.00 as payment of the surcharge for providing an oath or declaration later than twenty months from the priority date, $280.00 as payment for multiple dependent claims), a check for $1280.00 as payment of the petition fee under 37 CFR 1.17(m), and a declaration and power of attorney signed by the inventors.

DISCUSSION

A petition under 37 CFR 1.137(b) requesting that the application be revived on the grounds of unintentional abandonment must be accompanied by (1) the required reply, (2) the petition fee required by law, (3) a statement that the, "entire delay in filing the required reply from the due date for the reply until the filing of a grantable petition pursuant to this paragraph was unintentional" and (4) any terminal disclaimer and fee pursuant to 37 CFR 1.137© (where required).

With regard to Item (1), the proper response was the payment of the basic national fee. Applicant has provided this payment along with the present petition.

As to Item (2), a check in the amount of the $1280.00 was included with the petition.

With regard to Item (3), applicant's statement that, "The delay in paying the fee to enter the national phase was unintentional, i.e., the entire delay in filing the required papers for entering the National Stage from the due day, September 12, 2001, until the filing of this petition, was unintentional." and the prompt filing of the petition satisfies the requirement of 37 CFR 1.137(b)(3).

As to Item (4), the terminal disclaimer is not required since this application was filed after 08 June 1995.

A review of the application file reveals that, with the filing of the present petition and accompanying papers, a proper response has been submitted and all of the requirements of 37 CFR 1.137(b) for revival have been satisfied and revival is therefore appropriate.

An examination of the filed declaration finds that it is not in compliance with 37 CFR 1.497 (a)-(b). Specifically, the inventors' citizenship is listed as "I."

CONCLUSION

For the reasons stated above, the petition for revival is **GRANTED**.

Application No.: 09/979,307

This application is being returned to the DO/EO/US for processing in accordance with this decision, namely, the mailing of a NOTIFICATION OF MISSING REQUIREMENTS UNDER 35 U.S.C. 371 (Form PCT/DO/EO/905).

Richard Cole
Legal Examiner
PCT Legal Office

Derek A. Putonen
Petitions Attorney
PCT Legal Office
Tel: (703) 305-0130
Fax: (703) 308-6459

APR 2 9 2002

UNITED STATES PATENT AND TRADEMARK OFFICE

COMMISSIONER FOR PATENTS
UNITED STATES PATENT AND TRADEMARK OFFICE
WASHINGTON, D.C. 20231
www.uspto.gov

Steven H. Noll
Schiff, Hardin & Waite
6600 Sears Tower
233 South Wicker Drive
Chicago, IL 60606

In re Application of VETTER U.S. Application No.: 09/979,327 PCT No.: PCT/DE00/01081 Int. Filing Date: 07 April 2000 Priority Date: 21 April 1999 Attorney Docket No.: P01,0346 For: POWER ELECTRONICS COMPONENT WITH IMPROVED THERMAL PROPERTIES	DECISION ON PETITION UNDER 37 CFR 1.181

This decision is in response to applicant's "Request to Withdraw Notification of Abandonment and Revive Application" filed 12 February 2002 in the United States Patent and Trademark Office (USPTO). The request is being treated as petition under 37 CFR 1.181. There is no petition fee.

BACKGROUND

On 07 April 2000, applicant filed international application PCT/DE00/02127 which claimed priority to an earlier application filed 21 April 1999. A copy of the international application was communicated to the United States Patent and Trademark Office from the International Bureau on 02 November 2000. A Demand for international preliminary examination, in which the United States was elected, was filed on 14 November 2000, prior to the expiration of nineteen months from the priority date. Accordingly, the thirty-month period for paying the basic national fee in the United States expired at midnight on 21 October 2001.

On 19 October 2001, applicant filed a transmittal letter for entry into the national stage in the United States, which was accompanied by: a check in the amount of 890.00 as payment of the full U.S. Basic National Fee; a translation of the international application into English; an unsigned declaration; an Information Disclosure Statement and drawings.

On 03 January 2002, applicant was mailed a NOTIFICATION OF ABANDONMENT (Form PCT/DO/EO) advising applicant that the application had been abandoned as to the United States for failure to provide payment of the basic national fee within thirty months of the earliest claimed priority date.

On 12 February 2002, applicant responded with the present petition under 37 CFR 1.181.

DISCUSSION

Applicant's earliest claimed priority date was 21 April 1999 necessitating payment of the U.S. basic national fee by 21 October 2001. An examination of the application papers finds the original Express Mail envelope with a "Date-In" date of 19 October 2001. In addition, the transmittal letter which accompanied the application lists the Express Mail number, EL 843744060 US; the international application number; attorney docket number and fee payment of $890.00. As such, applicant's papers should have been determined to have been filed and payment of the full U.S. basic national fee provided on 19 October 2001. Therefore, it is proper to grant applicant's petition at this time. Applicant is still required to provide an executed oath or declaration of the inventor.

CONCLUSION

Applicant's petition under 37 CFR 1.181 is **GRANTED**.

The NOTIFICATION OF ABANDONMENT mailed 03 January 2002 is hereby **VACATED**.

This application is being returned to the DO/EO/US for processing in accordance with this decision, namely, the mailing of a NOTIFICATION OF MISSING REQUIREMENTS (Form PCT/DO/EO/905).

Leonard Smith
Legal Examiner
PCT Legal Office

Derek A. Putonen
Petitions Attorney
PCT Legal Office
Tel: (703) 305-0130
Fax: (703) 308-6459

MAR 01 2002

UNITED STATES PATENT AND TRADEMARK OFFICE

COMMISSIONER FOR PATENTS
UNITED STATES PATENT AND TRADEMARK OFFICE
WASHINGTON, D.C. 20231
www.uspto.gov

#5

Glenn Patent Group
3475 Edison Way
Suite L
Menlo Park, CA 94025

In re Application of
JAMESON, John W., et al.
Application No.: 09/979,340
PCT No.: PCT/US00/13721
Int. Filing Date: 19 May 2000
Priority Date: 20 May 1999
Attorney's Docket No.: ALTO0001
For: VOICE CONTROLLED ELECTRONIC MUSICAL INSTRUMENT

DECISION

ON PETITION UNDER

37 CFR 1.6(e)

This decision is in response to "Petition For Revival of an Application For Patent Abandoned Unintentionally Under 37 CFR 1.137(b)" filed on 13 February 2002 via facsimile, which has been treated as a petition under 37 CFR 1.6(e), as discussed below.

BACKGROUND

On 21 November 2001, applicants submitted a transmittal letter for entry into the national stage in the United States, accompanied by, *inter alia*, the basic national fee. This submission was assigned application number 09/979,340.

On 24 January 2002, the United States Patent and Trademark Office (USPTO) mailed a Notification of Abandonment (Form PCT/DO/EO/909) indicating, *inter alia*, that the application had gone abandoned for failure to pay the basic national fee within thirty months.

On 13 February 2002, applicants submitted the instant petition to revive an application abandoned unintentionally, accompanied by, *inter alia,* copies of express mail labels numbered EL816157949US and EL556472999US, a copy of a postcard from USPS and a monthly statement of deposit account for deposit account 07-1445.

DISCUSSION

In the petition, applicants state that they filed this application with the appropriate fees on 20 November 2001, via Express Mail with the number EL816157949US. Further on 21 November 2001, the envelope containing the application was returned to them with a postcard indicating that mail had been suspended to ZIP code 20231. Applicants state that they then mailed the package to the temporary address established by the Office.

On 20 November 2001, USPTO designated the suspension of Express Mail service to Washington, D.C. ZIP Codes 202XX through 205XX (e.g., 20231) as a postal service interruption within the meaning of 35 U.S.C. §21(a) and 37 CFR 1.6(e).

37 CFR 1.6(e) provides:

> If interruptions or emergencies in the United States Postal Service which have been so designated by the Commissioner occur, the Patent and Trademark Office will consider as filed on a particular date in the Office any correspondence which is:
> (1) Promptly filed after the ending of the designated interruption or emergency; and
> (2) Accompanied by a statement indicating that such correspondence would have been filed on that particular date if it were not for the designated interruption or emergency in the United States Postal Service.

Applicants have established that the USPS refused to deliver the Express Mail package identified above to Washington, D.C. 20231 because of suspension of Express Mail service to that ZIP code through the postcard from the USPS. Thus, it has been established that applicants were subject to a designated postal service interruption and emergency on 20 November 2001. Applicants attempted to file the application on 20 November 2001, and have thus established that were it not for the USPS' designated interruption or emergency, the application would have been filed. Also, the above-identified application was filed promptly after the ending of the designated interruption or emergency. Accordingly, the request that the application be accorded a receipt date of 20 November 2001 is granted.

CONCLUSION

For the reasons set forth above, applicants' request that the application be accorded a receipt date of 20 November 2001 is **GRANTED** in accordance with 37 CFR 1.6(e).

The Notification of Abandonment (Form PCT/DO/EO/909) mailed 24 January 2002 is **VACATED**.

The application is being returned to the National Stage Processing Division of the Office of PCT Operations for continued processing in accordance with this decision. The application has a 35 U.S.C. §371 date of **20 November 2001**.

Richard Cole
PCT Legal Examiner
PCT Legal Administration

Erin M. Pender
Attorney Advisor
PCT Legal Administration

Telephone: (703) 305-0455
Facsimile: (703) 308-6459

UNITED STATES PATENT AND TRADEMARK OFFICE

Commissioner for Patents
United States Patent and Trademark Office
P.O. Box 1450
Alexandria, VA 22313-1450
www.uspto.gov

KENYON & KENYON LLP
ONE BROADWAY
NEW YORK NY 10004

COPY MAILED

NOV 20 2007

OFFICE OF PETITIONS

In re Application of
Werner Pochmuller
Application No. 09/979,349
Filed: March 22, 2002
Attorney Docket No. 10191/2056

DECISION ON PETITION

This is a decision on the petition, filed October 9, 2007, which is being treated as a petition under 37 CFR 1.181 (no fee), requesting withdrawal of the holding of abandonment in the above-identified application.

The petition is **GRANTED**.

This application was held abandoned for failure to timely respond to the Office action of January 24, 2007, which set a three (3) month shortened statutory period for reply. A reply was due on or before April 24, 2007.

Petitioner states that a timely reply was mailed via certificate of mailing on July 24, 2007, which included the following papers: a Notice of Appeal (accompanying fee) and a request for a three month extension of time (accompanying fee). Petitioner has submitted a copy of the previously mailed correspondence, which bears a certificate of mailing dated July 24, 2007, which would have rendered the reply timely if received. Further, petitioner has provided a stamped postcard receipt which serves as *prima facie* evidence that the reply was received by the Office.

The file record does not include the originally submitted papers. Failure to receive correspondence which includes a certificate of mailing or certificate of facsimile transmission is addressed in 37 CFR 1.8(b), reproduced below:

> In the event that correspondence is considered timely filed by being mailed or transmitted in accordance with paragraph (a) of this section, but not received in the U.S. Patent and Trademark Office after a reasonable amount of time has elapsed from the time of mailing or transmitting of the correspondence, or after the application is held to be abandoned, or after the proceeding is dismissed, terminated, or decided with prejudice, the correspondence will be considered timely if the party who forwarded such correspondence:

(1) Informs the Office of the previous mailing or transmission of the correspondence promptly after becoming aware that the Office has no evidence of receipt of the correspondence;

(2) Supplies an additional copy of the previously mailed or transmitted correspondence and certificate; and

(3) Includes a statement which attests on a personal knowledge basis or to the satisfaction of the Director to the previous timely mailing or transmission. If the correspondence was sent by facsimile transmission, a copy of the sending unit's report confirming transmission may be used to support this statement.

The petition satisfies the above requirements of 37 CFR 1.8(b). Accordingly, the holding of abandonment for failure to timely file a reply to the final Office action of January 24, 2007 is hereby withdrawn and the application restored to pending status.

There is no indication that the person signing the petition was ever given a power of attorney to prosecute the application. If the person signing the petition desires to receive future correspondence regarding this application, the appropriate power of attorney documents must be submitted.

The two-month period for filing an appeal brief in triplicate (accompanied by the fee required by 37 CFR 1.17(c)), runs from the date of this decision. See 37 CFR §§ 41.31 and 41.37.

The copy of the reply supplied with the petition will be accepted in place of the reply shown to have been received by the USPTO on October 9, 2007.

This application is being referred to Technology Center AU 3618 for appropriate action in the normal course of business on the reply received with petition.

Charlema Grant

Charlema Grant
Petitions Attorney
Office of Petitions

UNITED STATES PATENT AND TRADEMARK OFFICE

Commissioner for Patents
United States Patent and Trademark Office
P.O. Box 1450
Alexandria, VA 22313-1450
www.uspto.gov

COPY MAILED

JUL 0 8 2005

OFFICE OF PETITIONS

HORST M. KASPER
13 FOREST DRIVE
WARREN, N.J. 07059

In re Application of	:	
Richard Ian Brydges-Price	:	
Application No. 09/979,356	:	ON PETITION
Filed: November 21, 2001	:	
Attorney Docket No. KIN211	:	

This is a decision on the petition filed, June 9, 2005 under 37 CFR 1.137(b), to revive the above-identified application.

The petition is **GRANTED.**

The above-identified application became abandoned for failure to reply within the meaning of 37 CFR 1.113 in a timely manner to the final Office action mailed October 21, 2004, which set a shortened statutory period for reply of three (3) months. No extension of time under the provisions of 37 CFR 1.136(a) were obtained. Accordingly, the above-identified application became abandoned on January 22, 2005.

The above-identified application is being revived solely for purposes of continuity with a Request For Continued Examination (RCE) filed on June 9, 2005.

Telephone inquiries concerning this decision should be directed to Irvin Dingle at (571) 272-3210.

This matters is being referred to Technology Center AU 3641 for further processing.

Irvin Dingle
Petitions Examiner
Office of Petitions
Office of the Deputy Commissioner
for Patent Examination Policy

SPE RESPONSE FOR CERTIFICATE OF CORRECTION

Paper No.: _____

DATE : November 1, 2006

TO SPE OF : ART UNIT 3632

SUBJECT : Request for Certificate of Correction for Appl. No.: 09/979362 Patent No.: 6,957,793 B2

Please respond to this request for a certificate of correction within 7 days.

Please review the requested changes/corrections as shown in the **COCIN** document(s) in the IFW application image. No new matter should be introduced, nor should the scope or meaning of the claims be changed.

Please complete the response (see below) and forward the completed response to scanning using document code **COCX**.

Elisha Evans
Certificates of Correction Branch

703-308-9390 ext. 110

Thank You For Your Assistance

The request for issuing the above-identified correction(s) is hereby:
Note your decision on the appropriate box.

- ☑ **Approved** — All changes apply.
- ☐ **Approved in Part** — Specify below which changes **do not** apply.
- ☐ **Denied** — State the reasons for denial below.

Comments: All the changes are approved

Carl D. Friedman
Supervisory Patent Examiner
Group 3600
SPE

3632
Art Unit

PTO/SB/44 (04-05)
Patent and Trademark Office; U.S. DEPARTMENT OF COMMERCE
Under the Paperwork Reduction Act of 1995, no persons are required to respond to a collection of information unless it displays a valid OMB control Number
(Also Form PTO-1050)

UNITED STATES PATENT AND TRADEMARK OFFICE
CERTIFICATE OF CORRECTION

PATENT NO : 6,957,793
APPLICATION NO. : 09/979,362
DATED : October 25, 2006
INVENTOR(S) : Gérard Gautier, et al.

It is certified that an error appears or errors appear in the above-identified patent and that said Letters Patent is hereby corrected as shown below:

Front page, please replace the cover figure with the following new figure:

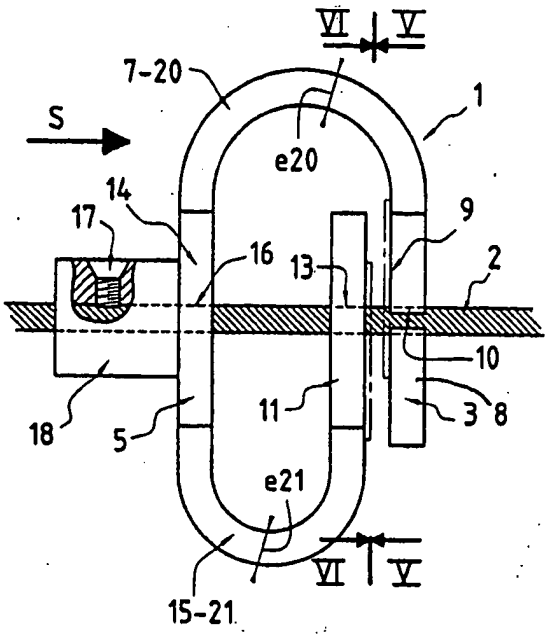

MAILING ADDRESS OF SENDER:

Weingarten, Schurgin, Gagnebin & Lebovici LLP
Ten Post Office Square
Boston, Massachusetts 02109

PATENT NO. 6,957,793

OCT - 6 2006

This collection of information is required by 37 CFR 1.322, 1.323, and 1.324. This information is required to obtain or retain a benefit by the public which is to file (and by the USPTO to process) an application. Confidentiality is governed by 35 U.S.C. 122 and 37 CFR 1.14. This collection is estimated to take 1.0 hour to complete, including gathering, preparing, and submitting the completed application form to the USPTO. Time will vary depending upon the individual case. Any comments on the amount of time you require to complete this form and/or suggestions for reducing this burden, should be sent to the Chief Information Officer, U.S. Patent and Trademark Office, U.S Department of Commerce, P.O. Box 1450, Alexandria, VA 22313-1450. DO NOT SEND FEES OR COMPLETED FORMS TO THIS ADDRESS. SEND TO: Attention Certificate of Corrections Branch, Commissioner for Patents, P.O. Box 1450, Alexandria, VA 22323-1450.

Under the Paperwork Reduction Act of 1995, no persons are required to respond to a collection of information unless it displays a valid OMB control Number
(Also Form PTO-1050)

UNITED STATES PATENT AND TRADEMARK OFFICE
CERTIFICATE OF CORRECTION

PATENT NO : 6,957,793
APPLICATION NO. : 09/979,362
DATED : October 25, 2006
INVENTOR(S) : Gérard Gautier, et al.

It is certified that an error appears or errors appear in the above-identified patent and that said Letters Patent is hereby corrected as shown below:

Second page of drawings, Sheet 1 of 2, please replace the figures with the following new figures:

FIG.1

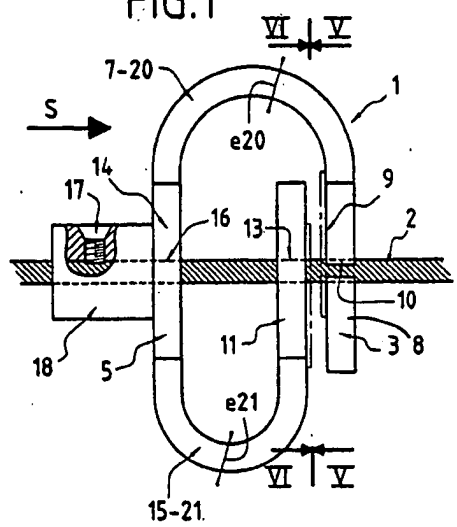

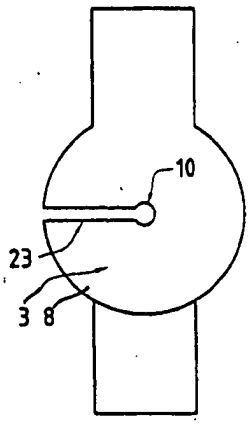

FIG.3

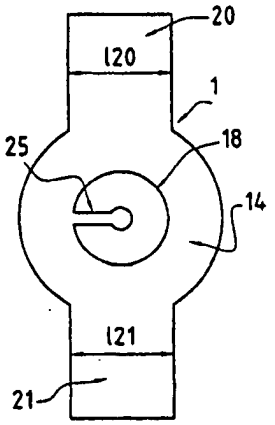

FIG.4

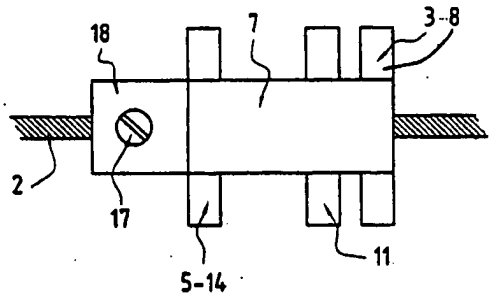

FIG.2

MAILING ADDRESS OF SENDER:

Weingarten, Schurgin, Gagnebin & Lebovici LLP
Ten Post Office Square
Boston, Massachusetts 02109

PATENT NO. 6,957,793

OCT - 6 2006

This collection of information is required by 37 CFR 1.322, 1.323, and 1.324. This information is required to obtain or retain a benefit by the public which is to file (and by the USPTO to process) an application. Confidentiality is governed by 35 U.S.C. 122 and 37 CFR 1.14. This collection is estimated to take 1.0 hour to complete, including gathering, preparing, and submitting the completed application form to the USPTO. Time will vary depending upon the individual case. Any comments on the amount of time you require to complete this form and/or suggestions for reducing this burden, should be sent to the Chief Information Officer, U.S. Patent and Trademark Office, U.S Department of Commerce, P.O. Box 1450, Alexandria, VA 22313-1450. DO NOT SEND FEES OR COMPLETED FORMS TO THIS ADDRESS. SEND TO: Attention Certificate of Corrections Branch, Commissioner for Patents, P.O. Box 1450, Alexandria, VA 22323-1450.

Under the Paperwork Reduction Act of 1995, no persons are required to respond to a collection of information unless it displays a valid OMB control Number
(Also Form PTO-1050)

UNITED STATES PATENT AND TRADEMARK OFFICE
CERTIFICATE OF CORRECTION

PATENT NO : 6,957,793
APPLICATION NO. : 09/979,362
DATED : October 25, 2006
INVENTOR(S) : Gérard Gautier, et al.

It is certified that an error appears or errors appear in the above-identified patent and that said Letters Patent is hereby corrected as shown below:

Third page of drawings, Sheet 2 of 2, please replace the figures with the following new figures:

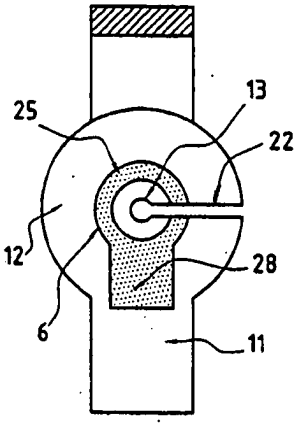

FIG.5

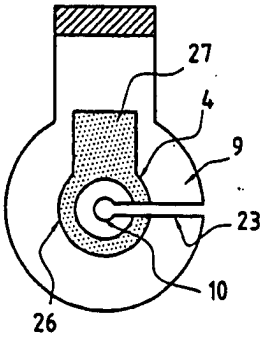

FIG.6

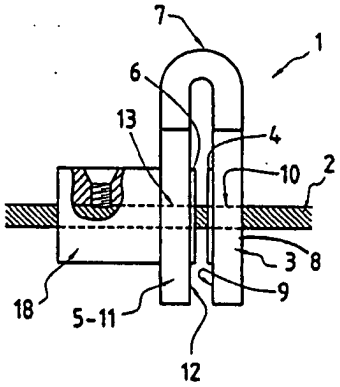

FIG.7

MAILING ADDRESS OF SENDER:

Weingarten, Schurgin, Gagnebin & Lebovici LLP
Ten Post Office Square
Boston, Massachusetts 02109

PATENT NO. 6,957,793

OCT - 6 2006

This collection of information is required by 37 CFR 1.322, 1.323, and 1.324. This information is required to obtain or retain a benefit by the public which is to file (and by the USPTO to process) an application. Confidentiality is governed by 35 U.S.C. 122 and 37 CFR 1.14. This collection is estimated to take 1.0 hour to complete, including gathering, preparing, and submitting the completed application form to the USPTO. Time will vary depending upon the individual case. Any comments on the amount of time you require to complete this form and/or suggestions for reducing this burden, should be sent to the Chief Information Officer, U.S. Patent and Trademark Office, U.S Department of Commerce, P.O. Box 1450, Alexandria, VA 22313-1450. DO NOT SEND FEES OR COMPLETED FORMS TO THIS ADDRESS. SEND TO: Attention Certificate of Corrections Branch, Commissioner for Patents, P.O. Box 1450, Alexandria, VA 22323-1450.

Under the Paperwork Reduction Act of 1995, no persons are required to respond to a collection of information unless it displays a valid OMB control Number

UNITED STATES PATENT AND TRADEMARK OFFICE
CERTIFICATE OF CORRECTION

PATENT NO : 6,957,793
APPLICATION NO. : 09/979,362
DATED : October 25, 2006
INVENTOR(S) : Gérard Gautier, et al.

It is certified that an error appears or errors appear in the above-identified patent and that said Letters Patent is hereby corrected as shown below:

Column 4, line 27, "l_{20}, and l_{21}". should read -- ℓ_{20} and ℓ_{21}--.

MAILING ADDRESS OF SENDER:

Weingarten, Schurgin, Gagnebin & Lebovici LLP
Ten Post Office Square
Boston, Massachusetts 02109

PATENT NO. 6,957,793

OCT - 6 2006

This collection of information is required by 37 CFR 1.322, 1.323, and 1.324. This information is required to obtain or retain a benefit by the public which is to file (and by the USPTO to process) an application. Confidentiality is governed by 35 U.S.C. 122 and 37 CFR 1.14. This collection is estimated to take 1.0 hour to complete, including gathering, preparing, and submitting the completed application form to the USPTO. Time will vary depending upon the individual case. Any comments on the amount of time you require to complete this form and/or suggestions for reducing this burden, should be sent to the Chief Information Officer, U.S. Patent and Trademark Office, U.S Department of Commerce, P.O. Box 1450, Alexandria, VA 22313-1450. DO NOT SEND FEES OR COMPLETED FORMS TO THIS ADDRESS. SEND TO: Attention Certificate of Corrections Branch, Commissioner for Patents, P.O. Box 1450, Alexandria, VA 22323-1450.

25 OCT 2002
UNITED STATES PATENT AND TRADEMARK OFFICE

COMMISSIONER FOR PATENTS
UNITED STATES PATENT AND TRADEMARK OFFICE
WASHINGTON, D.C. 20231
www.uspto.gov

Michael J. Striker
STRIKER, STRIKER & STENBY
103 East Neck Road
Huntington NY 11743

In re Application of Werner SPELDRICH, et al. Application No.: 09/979,411 PCT No.: PCT/IB00/00633 Int. Filing Date: 12 May 2000 Priority Date: 18 May 1999 Attorney Docket No.: 1915 For: POLARIZATION SEPARATING FILTER	DECISION ON PETITION UNDER 37 CFR 1.181

The "PETITION UNDER 37 C.F.R. 1.183 TO WAIVE THE REQUIREMENTS OF 37 C.F.R. 1.10 TO PERMIT THE U.S. PTO TO ACCORD THE SUBJECT APPLICATION A FILING DATE AS OF THE DATE THAT EXPRESS MAIL DEPOSIT WAS ATTEMPTED, NOVEMBER 19,2001" filed 09 January 2002 is being treated as a petition under 37 C.F.R. 1.181 to accord a filing date of 19 November 2001 to the above-identified application. No petition fee is required.

BACKGROUND

On 12 May 2000, applicants filed international application PCT/IB00/00633, which claimed priority of an earlier German application filed 18 May 1999. A Demand for international preliminary examination, in which the United States was elected, was filed on 15 December 2000, prior to the expiration of nineteen months from the priority date claimed. Accordingly, the thirty month period for paying the basic national fee in the United States expired at midnight on Monday 19 November 2001.

On 19 November 2001, applicants purportedly filed a Transmittal Letter and papers for entry into the national stage in the United States under 35 U.S.C. 371 using the "Express Mail" procedure. The "Express Mail" package was not accepted by the United States Postal Service (USPS) and returned with a note from the USPS urging applicants to "use alternate Priority or First Class" mail.

On 21 November 2001, applicants submitted the national stage papers by "Express Mail" addressed to P.O. Box 22327, which the temporary post-office box set up by the USPS for the Patent and Trademark Office after the 11 September 2001 event. The papers submitted 21 November were assigned the above-identified international application number.

On 06 December 2001, applicants filed national stage papers using the First Class mail procedure. These papers were also accompanied by the present petition and a declaration by Danielle Kerensky stating that she gave the "Express Mail" envelope to the USPS but the "Express Mail" postal service to the USPTO zip code had been discontinued. The petition requests that the present application be accorded a receipt date of 19 November 2001.

DISCUSSION

The 21 November 2001 submission of national stage papers and fees was filed after the expiration of the 30 months statutory time period for entry into the national stage in the United States for international application PCT/IB00/00633. Applicants filed the present petition requesting that the national stage submission be considered as timely filed on 19 November 2001 because these papers were deposited with the United States Postal Service (USPS) on 19 November 2001 but were returned by the USPS due to suspension of service to ZIP Code 20231.

On 20 November 2001, the United States Patent and Trademark Office (USPTO) designated the suspension of Express Mail service to Washington, D.C. ZIP Codes 202XX through 205XX (e.g., 20231) as a postal service interruption within the meaning of 35 U.S.C. 21(a) and 37 CFR 1.6(e). As expressly set forth therein, the procedures specifies therein are applicable to "Express Mail" deposits that are returned as undeliverable due to the suspension.

The "Notification Related to United States Postal Service Interruption, Suspension of the 'Express Mail' Service of United States Postal Service for mail addressed to ZIP Codes 202xx through 205xx" posted on the USPTO web site on 20 November 2001 states that for United States Postal Service interruptions relating to Express Mail, applicant should submit a statement by the person who originally attempted to deposit the correspondence with the USPS by Express Mail, the statement must indicate the date on which the person attempted to deposit the correspondence with the USPS and that the USPS refused to accept the correspondence or returned the correspondence, and the statement must be signed in accordance with 37 CFR 10.18. The procedures also require that the correspondence that was returned be mailed to the USPTO. Petitioners have not done this. Though the petition states that a copy of the application filed on 19 November 2001 is attached, it is clear, from the 21 November 2001 date indicated on page 2 of the transmittal letter, that what has been submitted is instead a copy of the 21 November 2001 submission, not the 19 November 2001

submission. Nor does Ms. Kerensky's statement identify what correspondence was deposited on 19 November 2001 but returned. Accordingly, the request that the application papers be accorded a receipt date of 19 November 2001 cannot be granted at this time.

CONCLUSION

For the reasons set forth above, applicants' request that the application papers submitted with the petition be accorded a receipt date of 19 November 2001 is **DISMISSED** without prejudice. The Notification of Missing Requirements Under 35 U.S.C. 371 (Form PCT/DO/EO/905) of 11 January 2002 and the ensuing Notification of Acceptance of Application (Form PCT/DO/EO/903) of 29 March 2002 indicating a 35 U.S.C. 371 completion date of 21 February 2002 were issued in error and are hereby VACATED. The application is abandoned as to the national stage in the U.S. as of midnight on 19 November 2001.

If reconsideration on the merits of the petition under 37 CFR 1.181 is desired, a proper reply must be filed within **TWO (2) MONTHS** from the mail date of this Decision. Any reconsideration request should include a cover letter entitled "Renewed Petition Under 37 CFR 1.181."

Please direct further correspondence with respect to this matter to the Assistant Commissioner for Patents, Box PCT, Washington, DC 20231, and address the contents of the letter to the attention of the Office of PCT Legal Administration.

Boris Milef
PCT Legal Examiner
PCT Legal Office

Nguyên Ngoc-Hô
Paralegal Specialist
PCT Legal Office

NNH/BM:hn

Tel: (703) 308-6508

UNITED STATES PATENT AND TRADEMARK OFFICE

COMMISSIONER FOR PATENTS
UNITED STATES PATENT AND TRADEMARK OFFICE
WASHINGTON, D.C. 20231
www.uspto.gov

05 MAY 2003

Michael J. Striker
STRIKER, STRIKER & STENBY
103 East Neck Road
Huntington NY 11743

In re Application of	:	
Werner SPELDRICH, et al.	:	
Application No.: 09/979,411	:	DECISION ON
PCT No.: PCT/IB00/00633	:	PETITION
Int. Filing Date: 12 May 2000	:	UNDER 37 CFR 1.181
Priority Date: 18 May 1999	:	
Attorney Docket No.: 1915	:	
For: POLARIZATION SEPARATING FILTER	:	

This decision is in response to applicants' "RENEWED PETITION UNDER 37 CFR 1.181" filed 25 November 2002. The petition is **GRANTED**, as follows:

In a previous decision of 25 October 2002, the Office dismissed applicants' request for accordance of a date of 19 November 2001 to the papers filed 21 November 2001 as the date of deposit of the national papers in the present application because applicants failed to provide a copy of the 19 November 2001 transmittal letter and because the declaration of Danielle Berensky failed to identify what correspondence was deposited on 19 November 2001 but returned.

The present Renewed Petition addresses both of the objections mentioned above. Applicants provide with the petition a copy of all the papers which were returned by the United States Postal Services and which are dated 19 November 2001, including a copy of the Transmittal Letter dated 19 November 2001. Applicants also provide a declaration by Olga Fuchs, the office administrator who personally prepared the "Express Mail" package bearing No. ET755324760US, listing all the contents of that package.

For the above reasons, all the requirements of 35 U.S.C. 21(a) and 37 CFR 1.6(e) have been met. The application papers filed 21 November 2001 are hereby accorded a date of deposit of 19 November 2001 as requested by applicants, and therefore were timely filed within the statutory period of 30 months from the priority date of 18 May 1999.

The application is returned to the United States Designated/Elected office for further processing, including the re-issuance of a Notification of Acceptance of Application (Form PCT/DO/EO/903).

Boris Milef
PCT Legal Examiner
PCT Legal Office

Nguyên Ngoc-Hô
Paralegal Specialist
PCT Legal Office

NNH/BM:hn

Tel: (703) 308-6508

UNITED STATES PATENT AND TRADEMARK OFFICE

COMMISSIONER FOR PATENTS
UNITED STATES PATENT AND TRADEMARK OFFICE
P.O. BOX 1450
ALEXANDRIA, VA 22313-1450
www.uspto.gov

COPY MAILED

AUG 16 2007

OFFICE OF PETITIONS

PERKINS COIE
PO BOX 2168
MENLO PARK, CA 94026

In re Application of
Hirohiko Hirochika, et al.
Application No. 09/979,430
Filed: February 19, 2002
Attorney Docket No. 59150-8015

ON PETITION

This is a decision in response to the petition, filed April 11, 2007, to revive the above-identified application under the provisions of 37 CFR 1.137(b).

The petition is DISMISSED AS MOOT.

A review of the record discloses that a final Office action was mailed on December 29, 2005, setting a 3-month period for reply. In response on March 29, 2006 an amendment was filed; however; since the amendment did not place the application in condition for allowance, an Advisory Action was mailed on May 8, 2006. Thereafter, on May 30, 2006, applicants filed a Request for Continued Examination (RCE) under 37 CFR 1.114. It is noted that while the RCE request included a general authorization to charge any underpayment of fees to a deposit account, the fees for a 2-month extension of time were not charged. The extension of time fees will be so charged.

Since the record has shown no abandonment existed, the petition under 37 CFR 1.137(b) is unnecessary and the $1,500 petition fee is being refunded to counsel's deposit account.

The application is being returned to the Office of Publications for further processing.

Sherry D. Brinkley
Petitions Examiner
Office of Petitions

12 AUG 2002

UNITED STATES PATENT AND TRADEMARK OFFICE

COMMISSIONER FOR PATENTS
UNITED STATES PATENT AND TRADEMARK OFFICE
WASHINGTON, D.C. 20231
www.uspto.gov

Royal N. Ronning, Jr.
AMERSHAM BIOSCIENCES
800 Centennial Avenue
Piscataway, New Jersey 08855

In re Application of NASMAN, Jan
U.S. Application No.: 09/979,444
PCT No.: PCT/EP00/05194
International Filing Date: 06 June 2000
Priority Date:06 June 1999
Attorney's Docket No.:PU-9924
For: VINYL MONOMER, SUPPORT MATRIX AND ITS PREPARATION

COMMUNICATION REGARDING SUBMISSION UNDER 37 CFR 1.42

This decision is issued in response to applicants' filing of a declaration executed on behalf of deceased inventor Jan NASMAN by Rose NASMAN as heir to the deceased inventor, which has been treated as a submission under 37 CFR 1.42. No petition fee is required.

BACKGROUND

On 06 June 2000, applicant filed international application PCT/EP00/979,444 which claimed a priority date of 06 June 1999 and which designated the United States. On 14 December 2000, a copy of the international application was communicated to the United States Patent And Trademark Office ("USPTO") by the International Bureau ("IB").

On 18 December 2000, a Demand was filed with the International Preliminary Examining Authority electing the United States. The election was made prior to the expiration of nineteen months from the priority date. As a result, the deadline for payment of the basic national fee was extended to expire thirty months from the priority date, i.e., 06 December 2001.

On 16 November 2001, applicant filed a transmittal letter for entry into the national stage in the United States accompanied by, among other materials, payment of the basic national fee.

On 03 January 2002, the United States Designated/Elected Office (DO/EO/US) mailed a Notification of Missing Requirements Under 35 U.S.C. 371 indicating that a properly executed oath or declaration in compliance with 37 CFR 1.497 was required.

On 15 April 2002, applicants filed a response that included an authorization to charge applicant's Deposit Account for the $130 surcharge and the required one month extension of time. The response also included a declaration executed on behalf of deceased inventor Jan NASMAN by Rose NASMAN as heir to the deceased inventor.

DISCUSSION

37 CFR 1.42 *When the Inventor is Dead*, states, in part:

> In case of the death of the inventor, the legal representative (executor, administrator, etc.) of the deceased inventor may make the necessary oath or declaration, and apply for and obtain the patent.

Section 409.01(a) of the Manual of Patent Examining Procedure (MPEP) states that the application can also be executed by "all of the heirs" of the deceased inventor, where no legal representative has been appointed.

The declaration submitted on 15 April 2002 was executed on behalf of deceased inventor Jan NASMAN by Rose NASMAN as "heir" to the deceased inventor. However, the declaration does not state that Jan NASMAN is the only heir of the deceased inventor, nor have applicants submitted any supplemental materials showing that this is the case. Absent a statement that the signing heir represents all the heirs of the deceased inventor, the declaration cannot be accepted under 37 CFR 1.42.

In addition, it is noted that revised 37 CFR 1.497(b)(2) states the following:

> (2) If the person making the oath or declaration or any supplemental oath or declaration is not the inventor (§§ 1.42, 1.43, or § 1.47) the oath or declaration shall state the relationship of the person to the inventor, and, upon information and belief, the facts which the inventor would have been required to state. If the person signing is the legal representative of a deceased inventor, the oath or declaration shall also state that the person is a legal representative and the citizenship, residence, and mailing address of the legal representative.

Pursuant to revised 37 CFR 1.497(b)(2), in addition to the residence, citizenship, and post office address of the deceased inventor, the declaration must also provide this information for the signing heir. The declaration filed on 15 December 2000 does not provide this information for both the deceased inventor and the legal representative/heir. Accordingly, the declaration is not in compliance with 37 CFR 1.497(b)(2).

CONCLUSION

The 15 April 2002 submission under 37 CFR 1.42 is **DISMISSED** without prejudice.

Applicants have **TWO (2) MONTHS** from the mailing date of this Communication to submit a proper response under 37 CFR 1.42. Failure to provide a proper and timely response will result in abandonment.

A proper response must include an acceptable declaration identifying the executing parties as all the heirs of the deceased inventor (or the legal representative of the estate, if such exists) and it must provide the information regarding both the deceased inventor and the legal representative/heir required by 37 CFR 1.497(b)(2) (as discussed above).

Any further correspondence with respect to this matter should be addressed to the Assistant Commissioner for Patents, Box PCT, Washington, D.C. 20231, with the contents of the letter marked to the attention of the PCT Legal Office.

Leonard Smith
PCT Legal Examiner
PCT Legal Office

Richard M. Ross
PCT Petitions Attorney
PCT Legal Office
Telephone: (703) 308-6155
Facsimile: (703) 308-6459

RMR/LS:rmr

15 NOV 2002

UNITED STATES PATENT AND TRADEMARK OFFICE

COMMISSIONER FOR PATENTS
UNITED STATES PATENT AND TRADEMARK OFFICE
WASHINGTON, D.C. 20231
www.uspto.gov

Royal N. Ronning, Jr.
AMERSHAM BIOSCIENCES
800 Centennial Avenue
Piscataway, New Jersey 08855

In re Application of NASMAN, Jan	:	
U.S. Application No.: 09/979,444	:	
PCT No.: PCT/EP00/05194	:	COMMUNICATION
International Filing Date: 06 June 2000	:	REGARDING SECOND
Priority Date: 06 June 1999	:	SUBMISSION UNDER
Attorney's Docket No.:PU-9924	:	37 CFR 1.42
For: VINYL MONOMER, SUPPORT MATRIX AND	:	
ITS PREPARATION	:	

In a decision mailed by this Office on 12 August 2002, applicant's original submission under 37 CFR 1.42 was dismissed for failure to satisfy 37 CFR 1.42 and 37 CFR 1.497.

On 03 September 2002, applicant filed the "Renewed Submission Under 37 CFR 1.42" considered herein. This submission includes a new declaration executed by Rose NASMAN and Harry NASMAN as heirs to the deceased inventor. The declaration includes the required citizenship, residence, and post office address information for both the heirs and the deceased inventor.

The submission of the declaration executed by heirs of the deceased inventor is hereby construed as an indication that no legal representative of the deceased's estate has been appointed and that no legal representative is required by the applicable law to be appointed.

In addition, counsel's statement that "the new Declaration has been executed by 'all the heirs' of the deceased inventor" is hereby construed as meaning that Rose NASMAN and Harry NASMAN are all of the heirs of the deceased inventor. If these interpretations are incorrect, applicant is required to promptly notify the Office of such and to submit a declaration properly executed by the legal representative of the deceased inventor (or by all the heirs) in response to this decision.

Based on the above, the revised declaration filed 03 September 2002 is **ACCEPTED** under 37 CFR 1.42 and 37 CFR 1.497.

The application is being forwarded to the National Stage Processing Branch of the Office Of PCT Operations for further processing in accord with this decision. The 35 U.S.C. 371 date is 03 September 2002.

Richard Cole
PCT Legal Examiner
PCT Legal Office

Richard M. Ross
PCT Petitions Attorney
PCT Legal Office
Telephone: (703) 308-6155
Facsimile: (703) 308-6459

RMR/RC:rmr

UNITED STATES PATENT AND TRADEMARK OFFICE

Commissioner for Patents
United States Patent and Trademark Office
P.O. Box 1450
Alexandria, VA 22313-1450
www.uspto.gov

COPY MAILED
JUL 25 2006
OFFICE OF PETITIONS

Norris, McLaughlin & Marcus,P.A.
875 Third Avenue, 18th Floor
New York, NY 10022

In re Application of	:	
Petra SCHUTZE, et al.	:	
Application No. 09/979,460	:	DECISION ON PETITION
Filed: November 14, 2001	:	TO WITHDRAW
Attorney Docket No. Schneider A (101215-79)	:	FROM RECORD
	:	

This is a decision on the Request to Withdraw as attorney or agent of record under 37 C.F.R. § 1.36(b), filed May 15, 2006.

The request is **NOT APPROVED**.

A grantable request to withdraw as attorney/agent of record must be signed by every attorney/agent seeking to withdraw or contain a clear indication that one attorney is signing on behalf of another/others. A request to withdraw will not be approved unless at least 30 (thirty) days would remain between the date of approval and the later of the expiration date of a time to file a response or the expiration date of the maximum time period which can be extended under 37 C.F.R. § 1.136(a).

The request cannot be approved because there remains less than 30 (thirty days) between the date of this decision and the maximum extendable time period for filing a response to the Office action mailed on February 6, 2006.

All future communications from the Office will continue to be directed to the above-listed address until otherwise notified by applicant.

Telephone inquiries concerning this decision should be directed to Monica Graves at 571-272-7253.

David Bucci
Petitions Examiner
Office of Petitions

cc: Frele Erfindungskunstier Gmbh
Neubruckerstrasse 37
Berlin, Germany D-13465

#6

UNITED STATES PATENT AND TRADEMARK OFFICE

COMMISSIONER FOR PATENTS
UNITED STATES PATENT AND TRADEMARK OFFICE
P.O. BOX 1450
ALEXANDRIA, VA 22313-1450
www.uspto.gov

21 AUG 2003

Gregory P. LaPointe
Bachman & Lapointe
900 Chapel St
Suite 1201
New Haven, CT 06510-2809

In re Application of HANS-HERMANN SPOHR Serial No.: 09/979,473 PCT No.: PCT/EP00/01678 Int. Filing Date: 29 February 2000 Priority Date: 26 May 1999 Attorney Docket No.: 01-650 For: SENSOR, IN PARTICULAR, A MAGNETOSTRICTIVE OR MAGNETOELASTIC SENSOR	DECISION ON PETITION TO WITHDRAW HOLDING OF ABANDONMENT

This decision is in response to applicant's "Petition to Withdraw Holding of Abandonment Based on Failure to Receive Office Action", treated as a petition under 37 CFR 1.181, filed 13 December 2002 in the United States Patent and Trademark Office (USPTO) in the above-captioned application, requesting withdrawal of the holding of abandonment. No petition fee is required. A copy of this petition was also filed in the USPTO via facsimile on 19 May 2003.

BACKGROUND

On 28 January 2002, a Notification of Missing Requirements was mailed to applicant indicating that an oath or declaration in compliance with 37 CFR 1.1497(a) & (b) was required.

On 18 November 2002, a Notification of Abandonment was mailed to applicant indicating that applicant had failed to respond to the 28 January 2002 Notification of Missing Requirements.

On 13 December 2002, applicant filed a "Petition to Withdraw Holding of Abandonment" seeking withdrawal of the holding of abandonment and alleging that the Notification of Missing Requirements mailed 28 January 2002 was never received, that no response was made and the application went abandoned. The petition is being treated as a petition to withdraw the holding of abandonment under 37 CFR 1.181.

DISCUSSION

A petition requesting relief based on the grounds that an Office action was not received as set forth in the Official Gazette at 1156 OG 53 must be accompanied by the following: (1) a statement by the practitioner stating that the Office action was not received by the practitioner and (2) attesting to the fact that a search of the file jacket and docket records indicates that the Office action was not received; (3) a copy of the docket record where the non-received Office action would have been entered had it been received and docketed must be attached to and referenced in practitioner's statement. (See also Delgar v. Schulyer, 172 USPQ 513 (D.D.C. 1971) and as set forth in the Official Gazette at 1156 OG 53 .)

In his petition, counsel states that the Office action was not received by the practitioner and that "a search of the file jacket and docket records indicates that the office communication was not received." Counsel's statements satisfied Items (1) and (2) above.

With regard to item (3), counsel declares that the docket records provided are true and accurate copies of the docket book of this firm indicating "the date where the office communication would have been entered and docketed had it been received." The docket record reflects the period of response for 21 March through 05 April 2002, including the due date for the response, 28 March 2002.

Thus, counsel has provided his docket record and explanation, showing all responses docketed for the date the response was due (28 March 2002 in this case) showing that there was no record of a response for the present application being due on that date.

CONCLUSION

Applicant's renewed petition under 37 CFR 1.181 to request to withdraw holding of abandonment is **GRANTED**.

The 18 November 2002 Notification of Abandonment (Form PCT/DO/EO/909) is hereby **VACATED.**

The application will be forwarded to the United States Designated/Elected Office for further processing including issuance of a new Notification of Missing Requirements (Form PCT/DO/EO/905) indicating that an oath or declaration executed by the inventors and a surcharge for filing the oath or declaration later than the 20 or 30 month period from the priority date is required.

Cynthia M. Kratz

Cynthia M. Kratz
Attorney Advisor
PCT Legal Office

Tel: 703-306-5467

UNITED STATES PATENT AND TRADEMARK OFFICE

Commissioner for Patents
United States Patent and Trademark Office
P.O. Box 1450
Alexandria, VA 22313-1450
www.uspto.gov

THE PROCTER & GAMBLE COMPANY
INTELLECTUAL PROPERTY DIVISION
WINTON HILL TECHNICAL CENTER – BOX 161
6110 CENTER HILL AVENUE
CINCINNATI, OH 45224

COPY MAILED

JUL 3 0 2004

OFFICE OF PETITIONS

In re Application of	:	
Gregory Scot Miracle, et al.	:	
Application No. 09/979,492	:	ON PETITION
Filed: November 14, 2001	:	
Attorney Docket No. 7593L	:	

This is a decision on the petition under 37 CFR 1.137(b), filed July 14, 2004, to revive the above-identified application.

The petition is **GRANTED.**

The above-identified application became abandoned for failure to submit the issue fee in a timely manner in reply to the Notice of Allowance mailed February 12, 2004, which set a statutory period for reply of three (3) months. Accordingly, the above-identified application became abandoned on May 13, 2004.

The petition satisfies the conditions for revival pursuant to the provisions of 37 CFR 1.137(b) in that (1) the reply in the form of payment of the issue fee; (2) the petition and publication fees; and (3) the required statement of unintentional delay have been received. Accordingly, the issue fee is accepted as having been unintentionally delayed.

The application matter is being forwarded to the Publishing Division for further processing.

Telephone inquiries concerning this decision should be directed to the undersigned at (703) 306-5594.

Retta Williams

Retta Williams
Petitions Examiner
Office of Petitions
Office of the Deputy Commissioner
for Patent Examination Policy

FEB 25 2002

#5

UNITED STATES PATENT AND TRADEMARK OFFICE

COMMISSIONER FOR PATENTS
UNITED STATES PATENT AND TRADEMARK OFFICE
WASHINGTON, D.C. 20231
www.uspto.gov

Gerald M. Murphy, Jr.
Birch, Stewart, Kolasch & Birch, LLP
P.O. Box 747
Falls Church, VA 22040-0747

In re Application of
WERNICKE, et al.
Application No.: 09/979,507
PCT No.: PCT/DE00/00881
Int. Filing Date: 24 March 2000
Priority Date: 25 March 1999
Attorney Docket No.: 3658-0103P
For: USE OF COLLAGENASE 3 FOR DETECTING DESTRUCTIVE DISEASES OF THE JOINTS, ESPECIALLY FOR PROGNOSING THE PROGRESSION OF THE DISEASE AND THE GENETIC PREDISPOSITION FOR RHEUMATOID ARTHRITIS

DECISION ON PETITION

UNDER 37 CFR 1.137(b)

This is in response to applicant's, "Petition For Revival of a PCT National Stage Application Abandoned Unintentionally Under 37 CFR § 1.137(b)" filed 23 November 2001. Applicant included the $1280.00 petition fee.

BACKGROUND

On 24 March 2000, applicant filed international application PCT/DE00/00881, which claimed priority of an earlier application filed 25 March 1999. A Demand for international preliminary examination was filed prior to the expiration of nineteen months from the priority date. Accordingly, the thirty-month period for paying the basic national fee in the United States expired at midnight on 25 September 2001.

On 25 September 2001, the application became abandoned for failure to pay the basic national fee for a U.S. national stage entry application.

On 23 November 2001, applicant filed the present petition accompanied by: a Transmittal Letter to the United States Designated/Elected Office (DO/EO/US) Concerning a Filing Under 35 U.S.C. § 371; a check for $2450.00 (1170.00 as payment for the basic national and other associated fees and $1280.00 as payment of the petition fee under 37 CFR 1.17(m)); an English translation of the International Application; three sheets of drawings and a First Preliminary Amendment.

Application No.: 09/979,507

DISCUSSION

A petition under 37 CFR 1.137(b) requesting that the application be revived on the grounds of unintentional abandonment must be accompanied by (1) the required reply, (2) the petition fee required by law, (3) a statement that the, "entire delay in filing the required reply from the due date for the reply until the filing of a grantable petition pursuant to this paragraph was unintentional" and (4) any terminal disclaimer and fee pursuant to 37 CFR 1.137(c) (where required).

With regard to Item (1), the proper response was the payment of the basic national fee. Applicant has provided this payment along with the present petition.

As to Item (2), a check in the amount of the $1280.00 was included with the petition.

With regard to Item (3), applicant's statement that, "Failure to timely file the application, and thus abandonment was unintentional" is being interpreted to mean that the entire delay in filing the required reply from the due date for the reply until the filing of a grantable petition pursuant to this paragraph was unintentional. If this is an incorrect reading of applicant's statement applicant should contact the PCT Legal Office immediately. Applicant's statement and the prompt filing of the petition satisfies the requirement of 37 CFR 1.137(b)(3).

As to Item (4), the terminal disclaimer is not required since this application was filed after 08 June 1995.

A review of the application file reveals that, with the filing of the present petition and accompanying papers, a proper response has been submitted and all of the requirements of 37 CFR 1.137(b) for revival have been satisfied and revival is therefore appropriate.

CONCLUSION

For the reasons stated above, the petition for revival is **GRANTED**.

This application is being returned to the DO/EO/US for processing in accordance with this decision, namely, the mailing of a NOTIFICATION OF MISSING REQUIREMENTS UNDER 35 U.S.C. 371 (Form PCT/DO/EO/905) for the reason stated above.

Leonard Smith
Legal Examiner
PCT Legal Office

Derek A. Putonen
Petitions Attorney
PCT Legal Office
Tel: (703) 305-0130
Fax: (703) 308-6459

SPE RESPONSE FOR CERTIFICATE OF CORRECTION

Paper No.:20060229

DATE : March 14, 2006

TO SPE OF : ART UNIT 2812

SUBJECT : Request for Certificate of Correction on Patent No.: 6788368

A response is requested with respect to the accompanying request for a certificate of correction.

Please complete this form and return with file, within **7** days to:
Certificates of Correction Branch - PK 3-910
Palm location **7590** - Tel. No. 305-8201

With respect to the change(s) requested, correcting Office and/or Applicant's errors, should the patent read as shown in the certificate of correction? No new matter should be introduced, nor should the scope or meaning of the claims be changed.

Thank You For Your Assistance **Certificates of Correction Branch**

The request for issuing the above-identified correction(s) is hereby:
Note your decision on the appropriate box.

☒ **Approved** **All** changes apply.

☐ **Approved in Part** Specify below which changes **do not** apply.

☐ **Denied** State the reasons for denial below.

Comments:

SPE: Michael Lebentritt **Art Unit** 2812

UNITED STATES PATENT AND TRADEMARK OFFICE

Commissioner for Patents
United States Patent and Trademark Office
P.O. Box 1450
Alexandria, VA 22313-1450
www.uspto.gov

10 JAN 2006

Thomas C. Feix
The Clorox Company
P.O. Box 24305
Oakland, CA 94623-1305

In re Application of	:	
SAVICKI	:	
U.S. Application No.: 09/979,527	:	
PCT No.: PCT/US99/13212	:	DECISION ON PETITION
Int. Filing Date: 10 June 1999	:	
Priority Date: None	:	UNDER 37 CFR 1.182
Attorney's Docket No.: 492.188	:	
For: CLOSURE DEVICE	:	

This decision is in response to applicant's facsimile correspondence filed 18 November 2005 in the United States Patent and Trademark Office (USPTO). The correspondence is being treated as a petition under 37 CFR 1.182 to correct the error in the Transmittal Letter (Form PTO-1390) filed 19 November 2001. As authorized, the $400.00 petition fee will be deducted from deposit account no.: 03-2270.

BACKGROUND

On 10 June 1999, applicant filed international application PCT/US99/13212. Pursuant to 37 CFR 1.495, the thirty-month period for paying the basic national fee in the United States expired at midnight on 10 December 2001.

On 16 November 2001, applicant filed a transmittal letter for entering the U.S. national stage under 35 U.S.C. 371 accompanied by: payment of the U.S. Basic National Fee; an executed combined declaration and power of attorney; an Information Disclosure Statement and an assignment document for recording. Both the transmittal letter and filed declaration identified the international application number as PCT/US99/13191. The attorney docket number was identified as 492.186. These papers were assigned serial number 09/979,367.

On 19 November 2001, applicant filed a transmittal letter for entering the U.S. national stage under 35 U.S.C. 371 accompanied by: payment of the U.S. Basic National Fee; an executed combined declaration and power of attorney; an Information Disclosure Statement and an assignment document for recording. The transmittal letter identified the international application number as PCT/US99/13191 whereas the filed declaration listed the international application number as PCT/US99/13212. The attorney docket number was identified as 492.188. These papers were assigned the present application number 09/979,527 and processed as the U.S. National stage of PCT/US99/13191.

On 30 January 2002, applicant was erroneously mailed a "Notification of Missing Requirements" (Form PCT/DO/EO/905) in application 09/979,527 informing applicant that an executed oath or declaration of the inventor in compliance with 37 CFR 1.497(a)-(b) was required. Applicant was afforded two months to file the required response and advised that this period could be extended pursuant to 37 CFR 1.136(a).

On 28 March 2002, applicant was mailed a "Notice of Cancellation of Assigned Serial Number" (Form PCT/DO/EO/908) informing applicant that assigned application number 09/979,367 had been cancelled and that all fees for that application had been credited to deposit account no.: 03-2270.

On 29 May 2003, applicant filed a status inquiry regarding this application.

On 01 December 2003, applicant was mailed a "Notice of Acceptance" (Form PCT/DO/EO/903) indicating a 371 date of 19 November 2001 for application number 09/979,527 as the U.S. National stage application of international application PCT/US99/13191.

On 01 April 2004, applicant filed an additional status inquiry regarding this application.

On 18 November 2005, applicant filed the present petition under 37 CFR 1.182 to correct the international application number in the Form PTO-1390 filed 19 November 2001 with the desired result of the reinstatement of the papers filed 16 November 2001 as the U.S. National stage filing of international application PCT/US99/13191 and the present U.S. National stage filing being the U.S. National stage filing of international application PCT/US99/13212. As discussed above, the $400.00 petition fee will be charged to deposit account no.: 03-2270.

DISCUSSION

The identifying information provided on the transmittal letter filed by applicant on 19 November 2001, i.e., the title, applicant-inventor information, priority date, and international filing date correspond to both PCT/US99/13191 and PCT/US99/13212. However, a review of the papers filed 19 November 2001 reveals that the declaration included sufficient information to permit identification of the application to which it was intended to be directed, namely, PCT/US99/13212.

CONCLUSION

For the reasons above, applicant's "Petition Under 37 CFR 1.182" is **GRANTED**.

The "Notification of Missing Requirements" (Form PCT/DO/EO/905) mailed 30 January 2002 is hereby **VACATED**.

The "Notice of Acceptance" (Form PCT/DO/EO/903) mailed 01 December 2003 is

hereby **VACATED**.

This application is being forwarded to the National Stage Processing Branch of the Office of PCT Operations to 1) process U.S. application number 09/979,527 as the U.S. National stage application of PCT/US99/**13212** using applicant's submission filed 19 November 2001 including issuance of a "Notice of Acceptance" (Form PCT/DO/EO/903) in the 09/979,527 application indicating a 371 date of **19 November 2001** and 2) removing the papers filed 16 November 2001 from the 09/979,527 application file and processing these papers as the U.S. National stage application of PCT/US99/**13191**.

Derek A. Putonen
Attorney Advisor
Office of PCT Legal Administration
Tel: (571) 272-3294
Fax: (571) 273-0459

UNITED STATES PATENT AND TRADEMARK OFFICE

COMMISSIONER FOR PATENTS
UNITED STATES PATENT AND TRADEMARK OFFICE
P.O. BOX 1450
ALEXANDRIA, VA 22313-1450
www.uspto.gov

DEC 12 2003

Paper No. 9

In re Application of
Alan Anthony Wilson *et al*
Application No. 09/979,569
Filed: November 19, 2001
Attorney Docket No. PG3707USW

: DECISION ON PETITION

This is a decision on the petition, filed by facsimile transmission on November 18, 2003, by which petitioners request withdrawal of the holding that this application stands abandoned for failure to file a reply to the Office letter dated March 25, 2003. The petition is being considered under 37 CFR 1.181, and no fee is required for the petition.

The petition is granted.

Petitioners have alleged that this application is not abandoned because a proper and timely reply to the Office letter in question was in fact filed. Petitioners have supported this allegation by furnishing a copy of the reply, and a copy of the transmittal letter for the reply. The transmittal letter has affixed thereto a 37 CFR 1.8(a) certificate of mailing dated April 21, 2003, a date within the period set by the Office letter in question for filing a reply thereto.

It is clear from the above evidence that a timely reply to the Office letter dated March 25, 2003 was in fact filed. See 37 CFR 1.8(b). Therefore, this application is not abandoned. Accordingly, the Notice of Abandonment is hereby vacated, the holding of abandonment is withdrawn, and the application is restored to pending status. The application is being forwarded to the examiner for action on the reply filed on April 21, 2003.

PETITION GRANTED.

E. Rollins-Cross, Director
Technology Center 3700

David J. Levy
Corporate Intellectual Property
GalaxoSmithKline
Five Moore Drive
P. O. Box 13398
Research Triangle Park, NC 27709-3398

09979577

SPE RESPONSE FOR CERTIFICATE OF CORRECTION

DATE : 22206

Paper No.: _____

TO SPE OF : ART UNIT 2657

SUBJECT : Request for Certificate of Correction on Patent No.: 6870802

A response is requested with respect to the accompanying request for a certificate of correction.

Please complete this form and return with file, within **7** days to:
Palm location **7580, Certificates of Correction Branch – South Tower – 9A22**
If response is for an IFW, **return to employee (named below) via PUBSCofC Team in MADRAS.**
With respect to the change(s) requested, correcting Office and/or Applicant's errors, should the patent read as shown in the certificate of correction (COCIN)? No new matter should be introduced, nor should the scope or meaning of the claims be changed.

Thank You For Your Assistance

ROCHAUN JOHNSON
Certificates of Correction Branch
Tel. No. 703-308-9390 EXT 119

The request for issuing the above-identified correction(s) is hereby:
Note your decision on the appropriate box.

- ☑ **Approved** — All changes apply.
- ☐ **Approved in Part** — Specify below which changes **do not** apply.
- ☐ **Denied** — State the reasons for denial below.

Comments:

ANDREA WELLINGTON
SUPERVISORY PATENT EXAMINER
SPE

2627
Art Unit

PTOL-306 (REV. 7/03)

U.S. DEPARTMENT OF COMMERCE Patent and Trademark Office

UNITED STATES PATENT AND TRADEMARK OFFICE

COMMISSIONER FOR PATENTS
UNITED STATES PATENT AND TRADEMARK OFFICE
P.O. BOX 1450
ALEXANDRIA, VA 22313-1450
WWW.USPTO.GOV

Paper No. 6

FRED G PRUNER JR
TROP PRUNER & HU, P.C.
8554 KATY FREEWAY
SUITE 100
HOUSTON, TX 77024

COPY MAILED
JUL 1 0 2003
OFFICE OF PETITIONS

In re Application of	:	
Yasuo Kamatani	:	
Application No. 09/979,623	:	NOTICE
Filed: February 22, 2002	:	
Attorney Docket No. LASR-0006-US	:	

This is a notice regarding your request for acceptance of a fee deficiency submission under 37 CFR 1.28. On September 1, 1998, the Court of Appeals for the Federal Circuit held that 37 CFR 1.28(c) is the sole provision governing the time for correction of the erroneous payment of the issue fee as a small entity. **See DH Technology v. Synergystex International, Inc. 154 F.3d 1333, 47 USPQ2d 1865 (Fed. Cir. Sept. 1, 1998).**

The Office no longer investigates or rejects original or reissue applications under 37 CFR 1.56. **1098 Off. Gaz. Pat. Office 502 (January 3, 1989)**. Therefore, nothing in this Notice is intended to imply that an investigation was done.

Your fee deficiency submission under 37 CFR 1.28 is hereby **ACCEPTED**.

Inquiries related to this communication should be directed to the Office of Petitions Staff at (703) 305-9285.

This file is being forwarded to Technology Center AU 2857.

Wan Laymon
Petitions Examiner
Office of Petitions
Office of the Deputy Commissioner
for Patent Examination Policy

16 DEC 2002
UNITED STATES PATENT AND TRADEMARK OFFICE

COMMISSIONER FOR PATENTS
UNITED STATES PATENT AND TRADEMARK OFFICE
WASHINGTON, D.C. 20231
www.uspto.gov

NIXON & VANDERHYE
1100 North Glebe Road, 8th Floor
Arlington, VA 22201-4714

In re Application of
OSMAN, Tariq *et al*
Application No.: 09/979,655
PCT No.: PCT/GB00/02045
Int. Filing Date: 26 May 2000
Priority Date: 26 May 1999
Attorney Docket No.: 604-618
For: GENERATION OF THERAPEUTIC MICROFOAM

DECISION

This decision is in response to applicants' "Response" filed 21 June 2002 which has been treated as a petition under 37 CFR 1.182. The $130.00 petition fee has been charged to Deposit Account No. 14-1140 as authorized.

BACKGROUND

On 21 May 2002, a Communication was mailed indicating that a petition under 37 CFR 1.182, or a new declaration was required because the second named inventor was listed differently than reported on the international publication.

On 21 June 2002, applicants submitted the instant petition which was accompanied by, *inter alia*, a "Declaration" of the aforementioned co-inventor.

DISCUSSION

As previously stated, section 605.04(c) of the MPEP lists the procedures required to change the name of an inventor and states, in part:

> The petition must include an appropriate petition fee and an affidavit signed with both names and setting forth the procedure whereby the change of name was effected, or a certified copy of the court order.

Here, applicants have provided a declaration signed by the co-inventor who was listed as Sheila Bronwen Flynn in the international application but states that she "married, and changed my name to Sheila Bronwen Shilton-Brown." The declaration is signed with both names.

This meets the requirements of the MPEP.

CONCLUSION

For the reasons above, the petition under 37 CFR 1.182 is **GRANTED**.

Applicants have completed the requirements for acceptance under 35 U.S.C. § 371(c). The application has an international filing date of 26 May 2000, under 35 U.S.C. 363, and a 35 U.S.C. 371(c) date of **12 April 2002**.

This application is being forwarded to the National Stage Processing Division of the Office of PCT Operations for continued processing

James Thomson

James Thomson
Attorney Advisor
PCT Legal Office

Tel.: (703) 308-6457

31 JUL 2002

UNITED STATES PATENT AND TRADEMARK OFFICE

COMMISSIONER FOR PATENTS
UNITED STATES PATENT AND TRADEMARK OFFICE
WASHINGTON, D.C. 20231
www.uspto.gov

YOUNG & THOMPSON
745 South 23rd Street
2nd Floor
Arlington, VA 22202

In re Application of
BESSIERE, Benoît *et al*
U.S. Application No.: 09/979,665
PCT No.: PCT/FR00/01024
Int. Filing Date: 19 April 2000
Priority Date: 26 May 1999
Attorney Docket No.: EP/FM BIF 103899/US
For: METHOD FOR MOULDING AN OPTICAL LENS AND CORRESPONDING INSTALLATION

DECISION ON PETITION UNDER 37 CFR 1.47(a)

This is a decision on applicants' "Petition under 37 C.F.R. §1.47(a)" filed on 30 April 2002.

BACKGROUND

On 31 December 2001, the United States Designated/Elected Office (DO/EO/US) mailed a Notification of Missing Requirements under 35 U.S.C. 371 (Form PCT/DO/EO/905) indicating that an oath/declaration in compliance with 37 CFR 1.497(a) and (b) must be provided. Applicants were given two months to respond.

On 30 April 2002, applicants submitted the instant petition which was accompanied by, *inter alia*, the $130.00 petition fee; a two-month extension and $400 fee; an "Affidavit of Bernard Marchaison;" copies of various letters and receipts sent to Mr. Bessiere with accompanying English translations; an "Affidavit of Herbert Lewitter;" an "Affidavit of Francois Lepelletier;" and two declarations signed by two of the three listed co-inventors.

DISCUSSION

A petition under 37 CFR 1.47(a) must be accompanied by: (1) the required petition fee; (2) factual proof that the nonsigning inventor refuses to execute the application; (3) a statement of the last known address of the nonsigning inventor; (4) and an oath or declaration executed by the signing joint inventor on his behalf and on behalf of the non-signing joint inventor.

Concerning item (1), the $130.00 petition fee has been charged to Deposit Account No. 25-0120 as authorized.

Regarding item (2), section 409.03(d) of the Manual of Patent Examining Procedures explains what is required to prove a refusal by an inventor and states, in part:

> Where a refusal of the inventor to sign the application papers is alleged, the circumstances of the presentation of the application papers and of the refusal must be specified in a statement of facts by the person who presented the inventor with the application papers and/or to whom the refusal was made. . . .
>
> Proof that a bona fide attempt was made to present a copy of the application papers (specification, including claims, drawings, and oath or declaration) to the nonsigning inventor for signature, but the inventor refused to accept delivery of the papers or expressly stated that the application papers should not be sent, may be sufficient. . . .
>
> When it is concluded by the 37 CFR 1.47 applicant that a nonsigning inventor's conduct constitutes a refusal, all facts upon which that conclusion is based should be stated in the statement of facts in support of the petition or directly in the petition.

Here, applicants submitted proof that Mr. Bessiere was sent a complete copy of the application on 11 February 2002 in the form of a statement in paragraph 3 of the "Affidavit of Herbert Lewitter" and again on 25 March 2002 as stated in paragraph 5 of the aforementioned affidavit. A copy of the return receipt signed by Mr. Bessiere was included with the documents submitted along with an English translation of this document.

Then, Mr. Lewitter states that after submitting the documents including a request that Mr. Bessiere sign the accompanying declaration, he "never received any reply to this letter not the requested Combined Declaration and Power Form or the Assignment." Lewitter Decl. at ¶ 7. The nonresponse from the nonsigning inventor was confirmed by the "Affidavit of Francois Lepelletier" and the "Affidavit of Bernard Marchaison" in paragraphs five and eight respectively.

This evidence is sufficient to satisfy item (2).

Regarding item (3), applicants state that the last known address of the nonsigning co-inventor is:

12 avenue de la Trémouille
94100 Saint Maur Des Fosses
France

This information satisfies item (3).

However, applicants failed to satisfy item (4).

Applicants included two declarations signed by inventors, Naissan Bouslimi and Marianne Laviner. The nonsigning inventor's name, residence, post office address and citizenship are typed on the declaration. The declaration signed by Naissan Bouslimi satisfies the requirements of section 409.03(a) of the Manual of Patent Examining Procedure (MPEP) and is in compliance with 37 CFR 1.497(a) and (b).

But the declaration signed by Marianne Laviner does not meet the requirements of 37 CFR 1.497(a)(3) in that it does not properly identify all of the inventors. The name of inventor Marianne Laviner has been altered on the declaration. Specifically, some words in the French language have been added after the name (épouse Labunièrĕ) without an accompanying English translation. Applicants must submit an executed declaration listing the complete names of all inventors in the English language. If Ms. Laviner has changed her name due to marriage, then a petition under 37 CFR 1.182 is also required. *See* § 605.04(c) MPEP.

CONCLUSION

For the reason discussed above, applicants' petition under 37 CFR 1.47(a) is **DISMISSED** without prejudice.

If reconsideration on the merits of this petition is desired, a proper response must be filed within **TWO (2) MONTHS** from the mail date of this decision. Any reconsideration request should include a cover letter entitled "Renewed Petition Under 37 CFR 1.47(a)." Extensions of time may be obtained under 37 CFR 1.136(a).

Please direct further correspondence with respect to this matter to the Assistant Commissioner for Patents, Box PCT, Washington, D.C. 20231, and address the contents of the letter to the attention of the PCT Legal Office.

Richard Cole
PCT Legal Examiner
PCT Legal Office

James Thomson
Attorney Advisor
PCT Legal Office

Tel.: (703) 308-6457

26 NOV 2002

UNITED STATES PATENT AND TRADEMARK OFFICE

COMMISSIONER FOR PATENTS
UNITED STATES PATENT AND TRADEMARK OFFICE
WASHINGTON, D.C. 20231
www.uspto.gov

YOUNG & THOMPSON
745 South 23rd Street
2nd Floor
Arlington, VA 22202

In re Application of
BESSIERE, Benoît *et al*
U.S. Application No.: 09/979,665
PCT No.: PCT/FR00/01024
Int. Filing Date: 19 April 2000
Priority Date: 26 May 1999
Attorney Docket No.: EP/FM BIF 103899/US
For: METHOD FOR MOULDING AN OPTICAL LENS AND CORRESPONDING INSTALLATION

DECISION ON RENEWED PETITION UNDER 37 CFR 1.47(a)

This is a decision on applicants' "Renewed Petition under 37 C.F.R. §1.47(a)" filed on 13 September 2002.

BACKGROUND

On 31 July 2002, a decision dismissing applicants' petition under 37 CFR 1.47(a) was mailed. One of the two declarations submitted was not in compliance with 37 CFR 1.497. Applicants were given two months to respond.

On 13 September 2002, applicants submitted the instant renewed petition which was accompanied by, *inter alia*, a declaration signed by co-inventor Marianne Lavenir.

DISCUSSION

In the initial petition, applicants failed to provide an acceptable oath or declaration in compliance with 37 CFR 1.497(a)(3) which is required by item (4) of 37 CFR 1.47(a).

Here in the renewed petition, applicants have submitted a new declaration signed by Marianne Lavenir. The nonsigning inventor's name, residence, post office address and citizenship are typed on this declaration. Moreover, there is no alteration of the name of the co-inventor Marianne Laveni, or foreign words added in this new declaration. The declaration signed by Marianne Lavenir satisfies the requirements of section 409.03(a) of the Manual of Patent Examining Procedure (MPEP) and is in compliance with 37 CFR 1.497(a) and (b).

Accordingly, all the requirements of 37 CFR 1.47(a) are now complete.

CONCLUSION

Applicants' renewed petition under 37 CFR 1.47(a) is **GRANTED**.

Applicants have completed the requirements for acceptance under 35 U.S.C. 371(c). The application has an international filing date of 19 April 2000 under 35 U.S.C. 363, and a 35 U.S.C. 371 date of 13 September 2002.

As provided in 37 CFR 1.47(a), a notice of the filing of this application will be forwarded to the non-signing inventor at his last known address of record and will be published in the Official Gazette.

This application is being forwarded to the National Stage Processing Division of the Office of PCT Operations for continued processing.

James Thomson

James Thomson
Attorney Advisor
PCT Legal Office

Tel.: (703) 308-6457

UNITED STATES PATENT AND TRADEMARK OFFICE

COMMISSIONER FOR PATENTS
UNITED STATES PATENT AND TRADEMARK OFFICE
P.O. BOX 1450
ALEXANDRIA, VA 22313-1450
WWW.USPTO.GOV

Paper No. 13

COPY MAILED

JUN 0 4 2003

OFFICE OF PETITIONS

YOUNG & THOMPSON
745 SOUTH 23RD STREET 2ND FLOOR
ARLINGTON VA 22202

In re Application of
Bessiere, et al.
Application No. 09/979,665
Effective filing date: November 26, 2001
Filing date: September 13, 2002
Attorney Docket No. EP/FM BIF 103899/US
For: METHOD FOR MOULDING AN OPTICAL LENS AND CORRESPONDING INSTALLATION

: DECISION ON PETITION

This is a decision on the petition under 37 CFR 1.182, filed May 23, 2003, to change the name of the third listed named inventor.

The petition is **GRANTED**.

The last name of the third inventor has been changed from "LAVENIR" to "LABUSSIERE." A replacement filing receipt reflecting this change is enclosed.

The file is being forwarded to Technology Center 1700.

Telephone inquiries concerning this matter may be directed to the undersigned at 703-308-6712.

E. Shirene Willis
Senior Petitions Attorney
Office of Petitions

enclosure: replacement filing receipt

22 MAY 2003

#7

UNITED STATES PATENT AND TRADEMARK OFFICE

COMMISSIONER FOR PATENTS
UNITED STATES PATENT AND TRADEMARK OFFICE
P.O. BOX 1450
ALEXANDRIA, VA 22313-1450
www.uspto.gov

Edward J. Chalfie
Chalfie & Associates
311 South Wacker Drive, Suite 5125
Chicago, IL 60606-6622

In re Application of GRAM U.S. Application No.: 09/979,687 PCT No.: PCT/DK00/00261 Int. Filing Date: 15 May 2000 Priority Date: 17 May 1999 Attorney Docket No.: 65014-027 For: MOULD WITH TURNABLE MIDDLE SECTION	DECISION ON PETITION UNDER 37 CFR 1.137(b)

This decision is in response to applicant's "Petition For Revival of an Application For Patent Abandoned Unintentionally Under 37 CFR 1.137(b)" filed 24 April 2003. Applicant has paid the $650.00 small entity petition fee.

BACKGROUND

On 15 May 2000, applicant filed international application PCT/DK00/00261, which claimed priority of an earlier application filed. A Demand for international preliminary examination, in which the United States was elected was filed prior to the expiration of nineteen months from the priority date. Accordingly, the thirty-month period for paying the basic national fee in the United States expired at midnight on 15 November 2001.

On 14 November 2001, applicant filed a transmittal letter for entering the U.S. national stage under 35 U.S.C. 371 accompanied by: payment of the U.S. basic national fee; a copy of the published international application and an unexecuted oath or declaration of the inventor.

On 01 February 2002, applicant was mailed a "Notification of Missing Requirements Under 35 U.S.C. 371" (Form PCT/DO/EO/905) informing applicant of the need to provide an executed oath or declaration of the inventor, as well as, payment of the $65.00 surcharge for providing an oath or declaration of the inventor later than thirty months from the earliest claimed priority date. Applicant was afforded two months to file the response.

On 29 November 2002, applicant was mailed a "Notification of Abandonment" (Form PCT/DO/EO/909) informing applicant that the present application was abandoned as to the

United States for failure to respond to the "Notification of Missing Requirements Under 35 U.S.C. 371" (Form PCT/DO/EO/905) mailed 01 February 2002.

On 24 April 2003, applicant filed the present petition to revive pursuant to 37 CFR 1.137(b).

DISCUSSION

A petition under 37 CFR 1.137(b) requesting that the application be revived on the grounds of unintentional abandonment must be accompanied by (1) the required reply, (2) the petition fee required by law, (3) a statement that the, "entire delay in filing the required reply from the due date for the reply until the filing of a grantable petition pursuant to this paragraph was unintentional" and (4) any terminal disclaimer and fee pursuant to 37 CFR 1.137(c) (where required).

With regard to Item (1), the proper response was submission of an executed oath or declaration of the inventor. Applicant has presently filed a declaration executed by inventor GRAM.

As to Item (2), applicant has included the small entity fee of $650.00 along with the present petition.

With regard to Item (3), applicant's statement that, "the entire delay in filing the required reply from the due date for the required reply until the filing of a grantable petition under 37 CFR 1.137(b) was unintentional" satisfies the requirement of 37 CFR 1.137(b)(3).

As to Item (4), the terminal disclaimer is not required since this application was filed after 08 June 1995.

A review of the application file reveals that, with the filing of the present petition and accompanying papers, a proper response has been submitted and all of the requirements of 37 CFR 1.137(b) for revival have been satisfied and revival is therefore appropriate. Further, a review of the application file reveals that all of the requirements of 35 U.S.C. 371 for entry into the national stage in the United States have been satisfied.

CONCLUSION

For the reasons stated above, applicant's petition to revive under 37 CFR 1.137(b) is **GRANTED**.

This application is being returned to the United States Designated/Elected Office for processing in accordance with this decision. The 35 U.S.C. 371(c) date is **24 April 2003**.

Derek A. Putonen
Attorney Advisor
Office of PCT Legal Administration
Tel: (703) 305-0130
Fax: (703) 308-6459

Request for Legal Staff Consideration

Serial No. 09/979687 Date 06 MAY 2003

Request: Petition to Revive in Case.

Thanks

Requestor Christine Washington Supervisor _____

Response: Petition Granted. Please Prepare & Mail 903 with 371 Date of 24 April 2003.

By: _____ Date _____

24 JUL 2002

UNITED STATES PATENT AND TRADEMARK OFFICE

COMMISSIONER FOR PATENTS
UNITED STATES PATENT AND TRADEMARK OFFICE
WASHINGTON, D.C. 20231
www.uspto.gov

Eric S. Hyman
Blakely, Sokoloff, Taylor & Zafman
12400 Wilshire Boulevard
7th Floor
Los Angeles, California 90025

In re Application of	:	
BERNARD et al.	:	
U.S. Application No. 09/979,692	:	DECISION ON PETITION
PCT No.: PCT/FR00/01255	:	UNDER 37 CFR 1.47(a)
Int. Filing Date: 10 May 2000	:	
Priority Date: 11 May 1999	:	
Attorney Docket No.: 15675P378	:	
For: RESISTIVE WIRE MASS FLOW METERS	:	

This is a decision on applicants' "Petition Under 37 CFR 1.47(a)" filed 17 May 2002 to accept the application without the signatures of joint inventor, Eric Collet. The required petition fee of $130.00 (37 CFR 1.17(i)) has been charged to Deposit Account no. 02-2666.

BACKGROUND

On 10 May 2000, applicants filed international application PCT/FR00/01255 which claimed a priority date of 11 May 1999 and designated the United States. A Demand for international preliminary examination was filed prior to the expiration of nineteen months from the international filing date. Accordingly, the thirty-month period for paying the basic national fee in the United States was midnight, 11 November 2001.

On 09 November 2001, applicant filed a transmittal letter for entry into the national stage in the United States, which accompanied by, inter alia: the requisite basic national fee as required by 35 U.S.C. 371(c)(1); the international application; and a preliminary amendment.

On 25 January 2002, the United Stated Designated/Elected Office mailed a Notification of Missing Requirements under 35 U.S.C. 371 (Form PCT/DO/EO/905) indicating that an oath or declaration in compliance with 37 CFR 1.497(a) and (b) must be filed. The notification set a two-month time limit in which to respond.

On 17 May 2001, applicant filed the present petition under 37 CFR 1.47(a). A two month extension of time fee ($400) has been charged to Deposit Account no. 02-2666.

DISCUSSION

A petition under 37 CFR 1.47(a) must be accompanied by (1) the fee under 37 CFR 1.17(h), (2) factual proof that the missing joint inventor refuses to execute the application or cannot be reached after diligent effort, (3) a statement of the last known address of the missing inventor, and (4) an oath or declaration by each 37 CFR 1.47(a) applicant on his or her own behalf and behalf of the non-signing joint inventor. Items (1)and(3) have been satisfied.

Regarding item (2) above, Section 409.03(d) of the Manual of Patent Examining Procedure (M.P.E.P.), **Proof of Unavailability or Refusal**, states, in part:

> Where a refusal of the inventor to sign the application papers is alleged, the circumstances of the presentation of the application papers and of the refusal must be specified in a statement of facts by the person who presented the inventor with the application papers and/or to whom the refusal was made. Statements by a party not present when an oral refusal is made will not be accepted.
>
> Proof that a bona fide attempt was made to present a copy of the application papers (specification, including claims, drawings, and oath or declaration) to the nonsigning inventor for signature, but the inventor refused to accept delivery of the papers or expressly stated that the application papers should not be sent, may be sufficient. When there is an express oral refusal, that fact along with the time and place of the refusal must be stated in the statement of facts. When there is an express written refusal, a copy of the document evidencing that refusal must be made part of the statement of facts. The document may be redacted to remove material not related to the inventor's reasons for refusal.
>
> When it is concluded by the 37 CFR 1.47 applicant that a nonsigning inventor's conduct constitutes a refusal, all facts upon which that conclusion is based should be stated in the statement of facts in support of the petition or directly in the petition. If there is documentary evidence to support facts alleged in the petition or in any statement of facts, such evidence should be submitted. Whenever a nonsigning inventor gives a reason for refusing to sign the application oath or declaration, that reason should be stated in the petition.

A review of the present petition and the accompanying papers reveal that applicant has not satisfied item (2) above, in that the applicants have not shown that a bona fide attempt was made to present the application papers, including the specification, claims, and drawings to Eric Collet. The mailing of the Declaration is not considered a complete copy of the application papers (specification, including claims, drawings, and oath and declaration). Additionally, Jean-Robert Callon De Lamarck declares, "I sent to Mr. Collet a letter at his

last known address requesting that he execute the declaration required in the United States for the above-identified application" and has provided a copy of the letter mailed 24 January 2002 (Exhibit 1) and a delivery certificate (Exhibit 2) to Mr. Collet, however, these documents are in French and have not been translated. Applicant's must provide complete translations of Exhibit 1 and 2. As stated above, in order to meet the requirements of 37 CFR 1.47(a) and Section 409.03(d) of the MPEP, a statement of facts is needed from a person having first hand knowledge of the facts that a complete copy of the application papers was sent to Eric Collet, and when such papers were sent. In addition, copies of documentary evidence such as a certified mail return receipt, cover letter of instruction, telegrams, etc., should be supplied with the declaration.

As to Item (4), petitioner states, "in response to the Notification of Missing Requirements mailed January 25, 2002, submitted herewith is a declaration which has been executed by co-inventor Marc Bernard," however, a review of the petition papers and application folder reveal that a declaration executed on behalf of Marc Bernard behalf and the behalf of the non-signing inventor is not located therein.

For the reasons stated above, it would not be appropriate to accept the application without the signature of Eric Collet under 37 CFR 1.47(a) at this time.

CONCLUSION

The petition under 37 CFR 1.47(a) is **DISMISSED** without prejudice.

If reconsideration on the merits of this petition is desired, a proper response must be filed within **TWO (2) MONTH** from the mail date of this decision. Any reconsideration request should include a cover letter entitled "Renewed Petition Under 37 CFR 1.47(a)." No additional petition fee is required.

Any further correspondence with respect to this matter should be addressed to the Assistant Commissioner for Patents, Box PCT, Washington, D.C. 20231, with the contents of the letter marked to the attention to the PCT Legal Office.

Boris Milef
PCT Legal Examiner
Office of PCT Legal Administration

Anthony Smith
Attorney-Advisor
Office of PCT Legal Administration
Tel: 703-308-6314
Facsimile: 703-308-6459

16 APR 2003

UNITED STATES PATENT AND TRADEMARK OFFICE

COMMISSIONER FOR PATENTS
UNITED STATES PATENT AND TRADEMARK OFFICE
WASHINGTON, D.C. 20231
www.uspto.gov

Eric S. Hyman
Blakely, Sokoloff, Taylor & Zafman
12400 Wilshire Boulevard
7th Floor
Los Angeles, California 90025

In re Application of	:	
BERNARD et al.	:	
U.S. Application No. 09/979,692	:	DECISION ON PETITION
PCT No.: PCT/FR00/01255	:	UNDER 37 CFR 1.47(a)
Int. Filing Date: 10 May 2000	:	
Priority Date: 11 May 1999	:	
Attorney Docket No.: 15675P378	:	
For: RESISTIVE WIRE MASS FLOW METERS	:	

This is a decision on applicant's "Renewed Petition Under 37 CFR 1.47(a)" filed 02 December 2002 to accept the application without the signature of joint inventor, Eric Collet. In a decision dated 24 July 2002, the Petition under 37 CFR 1.47(a) filed 17 May 2002 was dismissed because applicant did not provide adequate proof that joint inventor, Eric Collet, refused to execute the application or could not be reached after diligent effort.

BACKGROUND

On 10 May 2000, applicant filed international application PCT/FR00/01255 which claimed a priority date of 11 May 1999 and designated the United States. A Demand for international preliminary examination was filed prior to the expiration of nineteen months from the priority date. Accordingly, the thirty-month period for paying the basic national fee in the United States was midnight, 11 November 2001.

On 09 November 2001, applicant filed a transmittal letter for entry into the national stage in the United States, which accompanied by, inter alia: the requisite basic national fee as required by 35 U.S.C. 371(c)(1); the international application; and a preliminary amendment.

On 25 January 2002, the United Stated Designated/Elected Office mailed a Notification of Missing Requirements under 35 U.S.C. 371 (Form PCT/DO/EO/905) indicating that an oath or declaration in compliance with 37 CFR 1.497(a) and (b) must be filed. The notification set a two-month time limit in which to respond.

On 17 May 2001, applicant filed a petition under 37 CFR 1.47(a). In a decision dated 24 July 2002, applicant's petition was dismissed without prejudice.

On 02 December 2002, applicant filed the present renewed petition under 37 CFR 1.47(a). A two-month extension of time fee ($400) will be charged to Deposit Account no. 02-2666.

DISCUSSION

A petition under 37 CFR 1.47(a) must be accompanied by (1) the fee under 37 CFR 1.17(h), (2) factual proof that the missing joint inventor refuses to execute the application or cannot be reached after diligent effort, (3) a statement of the last known address of the missing inventor, and (4) an oath or declaration by each 37 CFR 1.47(a) applicant on his or her own behalf and behalf of the non-signing joint inventor. Applicant has provided items (1),(3), and (4) under 37 CFR 1.47(a).

A review of the present petition and the accompanying papers reveal that applicant has satisfied item (2), in that the applicant has shown that a bona fide attempt was made to present the application papers, including the specification, claims, and drawings to Eric Collet. The steps taken by Jean-Robert Callon Lamarck are sufficient to show that the missing inventor refuses to execute the application.

Accordingly, it is appropriate to accord the national stage application status under 37 CFR 1.47(a).

CONCLUSION

The renewed petition under 37 CFR 1.47(a) is **GRANTED**.

The application will be given an international filing date of 10 May 2000 under 35 U.S.C. 363, and a date of **02 December 2002** under 35 U.S.C. 371(c).

As provided in 37 CFR 1.47(a), a notice of the filing of this application will be forwarded to the nonsigning inventor at his last known address of record.

A notice of the filing of the application under 37 CFR 1.47(a) will be published in the Official Gazette.

This application is being returned to the United States Designated/Elected Office for processing in accordance with this decision.

Anthony Smith

Anthony Smith
Attorney-Advisor
Office of PCT Legal Administration
Tel: 703-308-6314
Facsimile: 703-308-6459

16 APR 2003

UNITED STATES PATENT AND TRADEMARK OFFICE

COMMISSIONER FOR PATENTS
UNITED STATES PATENT AND TRADEMARK OFFICE
WASHINGTON, D.C. 20231
www.uspto.gov

Eric Collet
333 rue de la Metairie
18230 Saint Doulchard - France

In re Application of
BERNARD et al.
U.S. Application No. 09/979,692
PCT No.: PCT/FR00/01255
Int. Filing Date: 10 May 2000
Priority Date: 11 May 1999
Attorney Docket No.: 15675P378
For: RESISTIVE WIRE MASS FLOW METERS

Dear Mr. Collet:

You are named as an inventor in the above identified United States patent application, filed under the provisions of 37 CFR 1.47(a) and 35 U.S.C. 116. Should a patent be granted, you will be designated as an inventor.

As a named inventor, you are entitled to inspect any paper in the file wrapper of the application, order copies of all or any part thereof (at a prepaid cost per 37 CFR 1.19) or to make your position of record in the application. Alternatively, you may arrange to do any of the preceding through a registered patent agent or attorney presenting written authorization from you. If you care to join in the application, counsel of record (see below) would presumably assist you. Joining in the application would entail the filing of an appropriate oath or declaration by you pursuant to 37 CFR 1.497.

Anthony Smith

Anthony Smith
Attorney-Advisor
PCT Legal Office
Tel.: 703-308-6314
Fax: 703-308-6459

Eric S. Hyman
Blakely, Sokoloff, Taylor & Zafman
12400 Wilshire Boulevard
7th Floor
Los Angeles, California 90025

16 APR 2003

UNITED STATES PATENT AND TRADEMARK OFFICE

COMMISSIONER FOR PATENTS
UNITED STATES PATENT AND TRADEMARK OFFICE
WASHINGTON, D.C. 20231
www.uspto.gov

OFFICIAL GAZETTE NOTICE

37 CFR 1.47 Notice by Publication

Notice is hereby given of the filing of an national stage application with a petition under 37 CFR 1.47 requesting acceptance of the application without the signature of all inventors. The petition has been granted. A notice has been sent to the last known address of the non-signing inventor. The inventor whose signature is missing (Eric Collet) may join in the application by promptly filing an appropriate oath or Declaration complying with 37 CFR 1.497. The international application number is PCT/FR00/01255 and was filed on 10 May 2000 in the name of Marc Bernard and Eric Collet for the invention entitled RESISTIVE WIRE MASS FLOW METERS. The national stage application number is 09/979,692 and has a 35 U.S.C. 371 date of 02 December 2002.

UNITED STATES PATENT AND TRADEMARK OFFICE

Commissioner for Patents
United States Patent and Trademark Office
P.O. Box 1450
Alexandria, VA 22313-1450
www.uspto.gov

ARNOLD S WEINTRAUB
WEINTRAUB GROUP P.L.C
32000 NORTHWESTERN HIGHWAY SUITE 240
FARMINGTON HILLS MI 48334

COPY MAILED

MAR 2 8 2007

OFFICE OF PETITIONS

In re Patent No. 6,940.402 :
Issued September 6, 2005 :
Application No. 09/979,697 : ON PETITION
Filed: November 6, 2001 :
Attorney Docket Number: BAC-118-A :

This is a decision on the petition, filed July 14, 2006, under 37 CFR 3.81(b) [1] to correct the assignee's name on the front of the Patent.

The petition is **DISMISSED**.

Petitioner states that the name of the assignee, Airsense Technology Limited, was inadvertently not included on the Fee(s) Transmittal form PTOL-85(b) at the time of payment of the issue fee on July 11, 2005. Accordingly, petitioner requests that a certificate of correction be issued to reflect the name of the assignee on the front page of the Letters Patent.

37 CFR 3.81(b), effective June 25, 2004, reads:

> *After payment of the issue fee:* Any request for issuance of an application in the name of the assignee submitted after the date of payment of the issue fee, and any request for a patent to be corrected to state the name of the assignee, must state that the assignment was submitted for recordation as set forth in § 3.11 before issuance of the patent, and must include a request for a certificate of correction under § 1.323 of this chapter (accompanied by the fee set forth in § 1.20(a) and the processing fee set forth in § 1.17(i) of this chapter.

The petition however, is not accompanied by a certificate of correction fee as required by 37 CFR §§ 1.323 and 3.81(b) and thus is not grantable.

---

[1] *See* Official Gazette of June 22, 2004

Any request for reconsideration should be filed within **TWO MONTHS** of the date of this decision in order to be considered timely. This time period may not be extended pursuant to 37 CFR 1.136. The application will be retained in the Office of Petitions for **TWO (2) MONTHS** to await petitioner's reply to this decision.

Further correspondence with respect to this matter should be addressed as follows:

By mail: Mail Stop Petitions
Commissioner for Patents
P.O. Box 1450
Alexandria, VA 22313-1450

By FAX: (571) 273-8300
Office of Petitions

Telephone inquiries regarding this decision should be directed to the undersigned Petitions Attorney at (571) 272-3212.

Patricia Faison-Ball

Patricia Faison-Ball
Senior Petitions Attorney
Office of Petitions

UNITED STATES PATENT AND TRADEMARK OFFICE

Commissioner for Patents
United States Patent and Trademark Office
P.O. Box 1450
Alexandria, VA 22313-1450
www.uspto.gov

ARNOLD S WEINTRAUB
WEINTRAUB GROUP P.L.C
32000 NORTHWESTERN HIGHWAY SUITE 240
FARMINGTON HILLS MI 48334

COPY MAILED

MAY 06 2008

OFFICE OF PETITIONS

In re Patent No. 6,940.402 :
Issued September 6, 2005 :
Application No. 09/979,697 :
Filed: November 6, 2001 :
Attorney Docket Number: BAC-118-A :

ON PETITION

This is a decision on the request for reconsideration filed April 13, 2007, under 37 CFR 3.81 (b)[1] to correct the assignee's name on the front of the Patent.

The petition is **GRANTED**.

Petitioner states that the name of the assignee, Airsense Technology Limited, was inadvertently not included on the Fee(s) Transmittal form PTOL-85(b) at the time of payment of the issue fee on July 11, 2005. Accordingly, petitioner requests that a certificate of correction be issued to reflect the name of the assignee on the front page of the Letters Patent.

37 CFR 3.81(b), effective June 25, 2004, reads:

> *After payment of the issue fee:* Any request for issuance of an application in the name of the assignee submitted after the date of payment of the issue fee, and any request for a patent to be corrected to state the name of the assignee, must state that the assignment was submitted for recordation as set forth in § 3.11 before issuance of the patent, and must include a request for a certificate of correction under § 1.323 of this chapter (accompanied by the fee set forth in § 1.20(a) and the processing fee set forth in § 1.17(i) of this chapter.

---

[1]Any request for issuance of an application in the name of the assignee submitted after the date of the payment of the issue fee, and any request that a patent be corrected to state the name of assignee must:

(A) state the assignment was submitted for recordation as set forth in 37 CFR §3.11 before issuance of the patent;
(B) provide a request for a certificate of correction §1.323;
(C) provide the fee set forth in 37 CFR §1.20 (a) and
(D) provide the processing fee set forth in 37 CFR §1.17(i)

A petition under 37 CFR 3.81 was filed July 14, 2006 and dismissed in a decision mailed March 28, 2007 since the request was not accompanied by a certificate of correction fee.

Office assignment records however, reflect that Airsense Technology Limited is the assignee of record. Accordingly, as the request complies with the provisions of 37 CFR 3.81(b), it would be appropriate for a certificate of correction to issue.

The proper fees for the petition and the certificate of correction have been applied.

Inquiries concerning this decision should be directed to the undersigned at (571) 272-3212. Any questions concerning the issuance of a certificate of correction should be directed to the Certificates of Correction Branch at (703) 305-8309.

This file is being referred to the Certificates of Correction Branch for issuance of a certificate of correction.

Patricia Faison-Ball

Patricia Faison-Ball
Senior Petitions Attorney
Office of Petitions

01 SEP 2004

#5

UNITED STATES PATENT AND TRADEMARK OFFICE

COMMISSIONER FOR PATENTS
UNITED STATES PATENT AND TRADEMARK OFFICE
P.O. BOX 1450
ALEXANDRIA, VA 22313-1450
www.uspto.gov

John S. Pratt
Kilpatrick Stockton
Suite 2800
1100 Peachtree Street
Atlanta, Georgia 30309-4530

In re Application of	:	
COOPER et al.	:	
Application No.: 09/979,699	:	DECISION ON PETITION
PCT No.: PCT/US00/12503	:	UNDER 37 CFR 1.137(b)
Int. Filing Date: 05 May 2000	:	
Priority Date: 06 May 1999	:	
Attorney Docket No.: 45738-265703	:	
For: ASSAY REAGENT		

The petition to revive under 37 CFR 1.137(b) filed 19 March 2003 in the above-captioned application is hereby **GRANTED** as follows:

Applicants' statement that "the entire delay in filing the required reply from the due date for the reply until the filing of a grantable petition under 37 CFR 1.137(b) was unintentional" meets the requirements of 37 CFR 1.137(b)(3).

A review of the application file reveals that applicants have submitted an executed declaration and power of attorney and the requirements of 37 CFR 1.137(b) have been satisfied. Therefore, the request to revive the application abandoned under 35 U.S.C. 371(d) is granted as to the National stage in the United States of America.

This application is being returned to the United States Designated/Elected Office for processing in accordance with this decision.

Anthony Smith

Anthony Smith
Attorney-Advisor
Office of PCT Legal Administration
Telephone: (703) 308-6314
Facsimile: (703) 308-6459

03 JUL 2003

#5

UNITED STATES PATENT AND TRADEMARK OFFICE

COMMISSIONER FOR PATENTS
UNITED STATES PATENT AND TRADEMARK OFFICE
P.O. BOX 1450
ALEXANDRIA, VA 22313-1450
www.uspto.gov

Paul T. Clark
Clark & Elbing, LLP
101 Federal Street
Boston, MA 02110-2214

In re Application of	:	
WHEELER et al.	:	
U.S. Application No. 09/979,706	:	DECISION ON PETITION
PCT No.: PCT/AU00/00624	:	
Int. Filing Date: 30 May 2000	:	
Priority Date: 31 May 1999	:	
Attorney Docket No.: 50124/007001	:	
For: FLUID ROTARY MACHINE	:	

This is a decision on applicants' "Statement under 37 CFR 1.47(a)" filed 24 July 2002 to accept the application without the signatures of joint inventor, Lui Lau. The required petition fee of $130.00 (37 CFR 1.17(h)) has been submitted.

BACKGROUND

On 30 May 2000, applicants filed international application PCT/AU00/00624 which claimed a priority date of 31 May 1999. A copy of the international application was communicated to the United States Patent and Trademark Office from the International Bureau on 07 December 2000. A Demand for international preliminary examination was filed prior to the expiration of nineteen months from the priority date. Accordingly, the thirty-month period for paying the basic national fee in the United States expired at midnight on 01 December 2002.

On 27 November 2002, applicants filed a transmittal letter for entry into the national stage in the United States, which accompanied by, inter alia: the requisite basic national fee as required by 35 U.S.C. 371(c)(1) and the international application.

On 07 October 2002, the United Stated Designated/Elected Office mailed a Notification of Missing Requirements under 35 U.S.C. 371 (Form PCT/DO/EO/905) indicating that an oath or declaration in compliance with 37 CFR 1.497(a) and (b) must be filed. The notification set a two-month time limit in which to respond.

On 24 July 2002, applicants filed "Statement under 37 CFR 1.47(a)" and a declaration executed by two of the three co-inventors.

DISCUSSION

A petition under 37 CFR 1.47(a) must be accompanied by (1) the fee under 37 CFR 1.17(h), (2) factual proof that the missing joint inventor refuses to execute the application or cannot be reached after diligent effort, (3) a statement of the last known address of the missing inventor, and (4) an oath or declaration by each 37 CFR 1.47(a) applicant on his or

her own behalf and behalf of the non-signing joint inventor. Items (1), (3) and(4) have been satisfied.

Regarding item (2) above, petitioner states that Lui Lau has refused to sign the application. Section 409.03(d) of the Manual of Patent Examining Procedure (M.P.E.P.), **Proof of Unavailability or Refusal**, states, in part:

> Where a refusal of the inventor to sign the application papers is alleged, the circumstances of the presentation of the application papers and of the refusal must be specified in a statement of facts by the person who presented the inventor with the application papers and/or to whom the refusal was made. Statements by a party not present when an oral refusal is made will not be accepted.
>
> Proof that a bona fide attempt was made to present a copy of the application papers (specification, including claims, drawings, and oath or declaration) to the nonsigning inventor for signature, but the inventor refused to accept delivery of the papers or expressly stated that the application papers should not be sent, may be sufficient. When there is an express oral refusal, that fact along with the time and place of the refusal must be stated in the statement of facts. When there is an express written refusal, a copy of the document evidencing that refusal must be made part of the statement of facts. The document may be redacted to remove material not related to the inventor's reasons for refusal.
>
> When it is concluded by the 37 CFR 1.47 applicant that a nonsigning inventor's conduct constitutes a refusal, all facts upon which that conclusion is based should be stated in the statement of facts in support of the petition or directly in the petition. If there is documentary evidence to support facts alleged in the petition or in any statement of facts, such evidence should be submitted. Whenever a nonsigning inventor gives a reason for refusing to sign the application oath or declaration, that reason should be stated in the petition.

A review of the present petition reveals that petitioner has not shown that a bona fide attempt was made to present the application papers (specification, claims, and drawings) to Lui Lau. The declaration of Anthony Paul Mizzi states, "the letter of 20 June 2002 included a copy of Australian Provisional Application no. PQ0674, but not a copy of the international application no. PCT/AU00/000624" and that Liu Lau would not execute the Declaration and Power of Attorney. The mailing of the Australian Provisional Application no. PQ0674 is not considered a complete copy of the instant application (specification, including claims, drawings, and oath or declaration). As stated above, where a refusal of the inventor to sign the application papers is alleged, a statement of facts is needed from a person having first hand knowledge of the facts that a complete copy of the application papers was sent to Lui Lau, and when such papers were sent. In addition, copies of documentary evidence such as a certified mail return receipt, cover letter of instruction,

telegrams, etc., should be supplied with the declaration.

For the reasons stated above, it would not be appropriate to accept the application without the signature of Lui Lau under 37 CFR 1.47(a) at this time.

CONCLUSION

The petition under 37 CFR 1.47(a) is **DISMISSED** without prejudice.

If reconsideration on the merits of this petition is desired, a proper response must be filed within **TWO (2) MONTH** from the mail date of this decision. Any reconsideration request should include a cover letter entitled "Renewed Petition Under 37 CFR 1.47(a)." No additional petition fee is required.

Any further correspondence with respect to this matter should be addressed to: Mail Stop PCT, Commissioner for Patents, Office of PCT Legal Administration, P.O. Box 1450, Alexandria, Virginia 22313-1450, with the contents of the letter marked to the attention of the Office of PCT Legal Administration.

Anthony Smith

Anthony Smith
Attorney-Advisor
Office of PCT Legal Administration
Tel: 703-308-6314
Facsimile: 703-308-6459

23 SEP 2[illegible] 2003

UNITED STATES PATENT AND TRADEMARK OFFICE

COMMISSIONER FOR PATENTS
UNITED STATES PATENT AND TRADEMARK OFFICE
P.O. BOX 1450
ALEXANDRIA, VA 22313-1450
www.uspto.gov

Paul T. Clark
Clark & Elbing, LLP
101 Federal Street
Boston, MA 02110-2214

In re Application of	:	
WHEELER et al.	:	
U.S. Application No. 09/979,706	:	DECISION ON PETITION
PCT No.: PCT/AU00/00624	:	
Int. Filing Date: 30 May 2000	:	
Priority Date: 31 May 1999	:	
Attorney Docket No.: 50124/007001	:	
For: FLUID ROTARY MACHINE	:	

This is a decision on applicants' "Renewed Petition under 37 CFR 1.47(a)" filed 02 September 2003 to accept the application without the signatures of joint inventor, Lui Lau.

BACKGROUND

On 30 May 2000, applicants filed international application PCT/AU00/00624 which claimed a priority date of 31 May 1999. A copy of the international application was communicated to the United States Patent and Trademark Office from the International Bureau on 07 December 2000. A Demand for international preliminary examination was filed prior to the expiration of nineteen months from the priority date. Accordingly, the thirty-month period for paying the basic national fee in the United States expired at midnight on 01 December 2002.

On 27 November 2002, applicants filed a transmittal letter for entry into the national stage in the United States, which accompanied by, inter alia: the requisite basic national fee as required by 35 U.S.C. 371(c)(1) and the international application.

On 07 October 2002, the United Stated Designated/Elected Office mailed a Notification of Missing Requirements under 35 U.S.C. 371 (Form PCT/DO/EO/905) indicating that an oath or declaration in compliance with 37 CFR 1.497(a) and (b) must be filed. The notification set a two-month time limit in which to respond.

On 24 July 2002, applicants filed "Statement under 37 CFR 1.47(a)" and a declaration executed by two of the three co-inventors. The petition under 37 CFR 1.47(a) was dismissed without prejudice in a Decision dated 03 July 2003.

On 03 September 2003, applicants filed the present renewed petition under 37 CFR 1.47(a).

DISCUSSION

A petition under 37 CFR 1.47(a) must be accompanied by (1) the fee under 37 CFR 1.17(h), (2) factual proof that the missing joint inventor refuses to execute the application or cannot be reached after diligent effort, (3) a statement of the last known address of the missing inventor, and (4) an oath or declaration by each 37 CFR 1.47(a) applicant on his or her own behalf and behalf of the non-signing joint inventor. Items (1) through (3) and (4) were satisfied in the petition under 37 CFR 1.47 filed 24 July 2002. satisfied.

A review of the present petition and the accompanying papers reveal that applicants have satisfied item (2), in that the applicant has shown that a bona fide attempt was made to present the application papers, including the specification, claims, and drawings to Lui Lau. The steps taken by Anthony Paul Mizzi are sufficient to show that Lui Lau refuses to execute the application.

Accordingly, it is appropriate to accord the national stage application status under 37 CFR 1.47(a).

CONCLUSION

The renewed petition under 37 CFR 1.47(a) is **GRANTED**.

The application will be given an international filing date of 30 May 2000 under 35 U.S.C. 363, and a date of **24 July 2002** under 35 U.S.C. 371(c).

As provided in 37 CFR 1.47(a), a notice of the filing of this application will be forwarded to the nonsigning inventor at his last known address of record.

A notice of the filing of the application under 37 CFR 1.47(a) will be published in the Official Gazette.

This application is being returned to the United States Designated/Elected Office for processing in accordance with this decision.

Anthony Smith
Attorney-Advisor
Office of PCT Legal Administration
Tel.: 703-308-6314
Fax: 703-308-6459

23 SEP 20[illegible]

UNITED STATES PATENT AND TRADEMARK OFFICE

COMMISSIONER FOR PATENTS
UNITED STATES PATENT AND TRADEMARK OFFICE
P.O. BOX 1450
ALEXANDRIA, VA 22313-1450
www.uspto.gov

Liu Lau
9 Avoca Close
Wellington, Western Australia 6155

In re Application of
WHEELER et al.
U.S. Application No. 09/979,706
PCT No.: PCT/AU00/00624
Int. Filing Date: 30 May 2000
Priority Date: 31 May 1999
Attorney Docket No.: 50124/007001
For: FLUID ROTARY MACHINE

Dear Mr. Lau:

You are named as an inventor in the above identified United States patent application, filed under the provisions of 37 CFR 1.47(a) and 35 U.S.C. 116. Should a patent be granted, you will be designated as an inventor.

As a named inventor, you are entitled to inspect any paper in the file wrapper of the application, order copies of all or any part thereof (at a prepaid cost per 37 CFR 1.19) or to make your position of record in the application. Alternatively, you may arrange to do any of the preceding through a registered patent agent or attorney presenting written authorization from you. If you care to join in the application, counsel of record (see below) would presumably assist you. Joining in the application would entail the filing of an appropriate oath or declaration by you pursuant to 37 CFR 1.497.

Anthony Smith

Anthony Smith
Attorney-Advisor
Office of PCT Legal Administration
Tel.: 703-308-6314
Fax: 703-308-6459

Paul T. Clark
Clark & Elbing, LLP
101 Federal Street
Boston, MA 02110-2214

30 JAN 2004

UNITED STATES PATENT AND TRADEMARK OFFICE

COMMISSIONER FOR PATENTS
UNITED STATES PATENT AND TRADEMARK OFFICE
P.O. BOX 1450
ALEXANDRIA, VA 22313-1450
www.uspto.gov

Nixon Peabody LLP
8180 Greensboro Drive, Suite 800
McLean, VA 22102

In re Application of	:	
ONISHI, Arataka	:	
Application No.: 09/979,720	:	DECISION ON
PCT No.: PCT/JP00/05391	:	
Int. Filing Date: 11 August 2000	:	PETITION
Priority Date: 24 August 1999	:	
Attorney Docket No.: 740159-63	:	UNDER 37 CFR 1.181
For: PROTECTIVE FILM FOR A PRISM LENS	:	

This decision is in response to applicant's "Petition to Revive an Unintentionally Abandoned Application," filed with the United States Patent and Trademark Office on 03 December 2003. It has been treated as a petition under 37 CFR 1.181. No petition fee is due.

BACKGROUND

On 11 August 2000, applicant filed international application PCT/JP00/05391. A demand for international preliminary examination was filed 02 February 2001, prior to the expiration of nineteen months from the priority date. A copy of the international application was transmitted to the Office on 01 March 2001. The deadline for entry into the national stage in the United States was thirty months from the priority date, or 25 February 2002 (24 February 2002 was a Sunday).

On 28 November 2001, applicant submitted a transmittal letter for entry into the national stage in the United States, accompanied by the basic national fee, a translation and the fee for late submission of the oath or declaration.

On 09 January 2003, the Office mailed Notification of Missing Requirements (Form PCT/DO/EO/905) indicating that an oath or declaration in compliance with 37 CFR 1.497(a)-(b) was required.

On 20 November 2003, the Office mailed Notification of Abandonment (Form PCT/DO/EO/909) indicating that the application went abandoned for failure to reply to the Notification of Missing Requirements.

On 03 December 2003, applicant submitted the instant petition accompanied by a declaration and a postcard receipt.

DISCUSSION

MPEP at section 503 states, in part:

> A postcard receipt which itemizes and properly identifies the papers which are being filed serves as *prima facie* evidence of receipt in the PTO of all the items listed thereon on the date stamped thereon by the PTO.

The postcard receipt lists, *inter alia*, a transmittal for patent application and a declaration. The postcard receipt is date stamped and indicates the applicant, the docket number and the title of the application.

The postcard receipt is adequate evidence that the patent transmittal letter and declaration were received on 31 March 2003.

The petition indicates that the papers enclosed are a copy of the 31 March 2003 submission and the statement is signed by someone registered to practice before the office.

The fee for a one month extension of time will be charged to deposit account no. 19-2380, as authorized.

CONCLUSION

For the reasons set forth above, the petition under 37 CFR 1.181 is **GRANTED**.

The Notification of Abandonment (Form PCT/DO/EO/909) mailed 20 November 2003 is **VACATED**.

This application is being forwarded to the National Stage Processing Branch of the Office of PCT Operations for further processing in accordance with this decision, including the mailing of a Notification Of Acceptance (Form PCT/DO/EO/903) and filing receipt. The 35 U.S.C. §371(c) date is 31 March 2003.

Erin M. Pender
Attorney Advisor
PCT Legal Administration

Telephone: 703-305-0455
Facsimile: 703-308-6459

UNITED STATES PATENT AND TRADEMARK OFFICE

UNITED STATES DEPARTMENT OF COMMERCE
United States Patent and Trademark Office
Address: COMMISSIONER FOR PATENTS
P.O. Box 1450
Alexandria, Virginia 22313-1450
www.uspto.gov

LADAS & PARRY LLP
224 SOUTH MICHIGAN AVENUE
SUITE 1600
CHICAGO, IL 60604

Mail Date: 04/21/2010

Applicant	: John O' Hara	: DECISION ON REQUEST FOR
Patent Number	: 7581257	: RECALCULATION of PATENT
Issue Date	: 08/25/2009	: TERM ADJUSTMENT IN VIEW
Appliction No	: 09/979,767	: OF WYETH
Filed	: 02/22/2002	:
		:

The Patentee's Request for Recalculation is **DISMISSED.**

This Request is deemed ineligible for consideration for one or more of the following reasons:

(A). The patent for which PTA recalculation is requested is either a design or reissue application or is a reexamination proceeding;

(B). The patent for which PTA recalculation is requested resulted from a utility or plant application filed under 35 USC 111(a) before May 29, 2000 and no CPA filed in the application on/after May 29, 2000;

(C). The patent for which PTA recalculation is requested resulted from an international application in which the international filing date was before May 29, 2000 and no CPA filed in the application on/after May 29, 2000;

(D). The patent for which PTA recalculation is requested issued on/after March 2, 2010;

(E). The Request for Recalculation was filed more than 180 days after the grant date of the patent and the request was not filed within two months of a dismissal of a request for reconsideration of the of the patent term under 37 CFR 1.705(d);

(F). The Request for Recalculation is not solely limited to USPTO pre-Wyeth interpretation of 35 U.S.C. 154(b)(2)(A);

or

(G). A civil action was filed pursuant to 35 U.S.C. 154(b)(4)(A)concerning the same patent at issue in this request.

Patentee may file a reply to this decision dismissing the Request for Recalculation. Patentee must file such reply within one month or thirty days, whichever is longer, of the mail date of the decision dismissing the Request for Recalculation. No fee is required if patentee is asserting in the reply that the dismissal for ineligibility is improper.

Patentee should use document code PET.OP if electronically filing a reply to this dismissal. If the USPTO finds that the request was improperly deemed ineligible, the USPTO will mail applicant a recalculation determination.

Patentee should be aware that in order to preserve the right to review in the United States District Court for the District of Columbia of the USPTO patent term adjustment determination, patentee must ensure that he or she also take the steps required under 35 U.S.C. 154(b)(4)(A). Nothing in the request for recalculation should be construed as providing an alternative time frame for commencing a civil action under 35 U.S.C. 154 (b)(4)(A).

Any questions concerning this decision should be directed to the Office of Patent Legal Administration at 571-272-7702.

29 JUL 2002

UNITED STATES PATENT AND TRADEMARK OFFICE

COMMISSIONER FOR PATENTS
UNITED STATES PATENT AND TRADEMARK OFFICE
WASHINGTON, D.C. 20231
www.uspto.gov

Marvin Petry
LARSON & TAYLOR, PLC
1199 North Fairfax Street
Suite 900
Alexandria, VA 22314

In re Application of
JENSEN, Soren *et al*
Application No.: 09/979,779
PCT No.: PCT/DK00/00286
Int. Filing Date: 26 May 2000
Priority Date: 28 May 1999
Attorney Docket No.: P07402US00/MP
For: METHOD AND SYSTEM FOR THE PRODUCTION OF A PLASTIC NEEDLE

DECISION ON REQUEST UNDER 37 CFR 1.497(d)

This is a decision on applicants' "Letter - Response to Missing Requirements Effecting Change to Inventive Entity" filed 12 February 2002. This is treated as a request under 37 C.F.R. 1.497(d).

BACKGROUND

On 15 January 2002, the United States Designated/Elected Office (DO/EO/US) mailed a NOTIFICATION OF MISSING REQUIREMENTS UNDER 35 U.S.C. 371 (Form PCT/DO/EO/905) and a NOTIFICATION OF A DEFECTIVE OATH OR DECLARATION (Form PCT/DO/EO/917) indicating that the declaration filed on 27 November 2001 with the national stage papers was not in compliance with 37 CFR 1.497(a) and (b) because it did not properly identify the inventors. Two inventors listed on the declaration were not identified as inventors in the international application.

On 12 February 2002, applicants filed the instant request which was accompanied by, *inter alia*, a document titled "Assignee Consent Under 37 CFR 1.497(d) Correction of Inventorship" signed by Lars Kelleberg and a document titled "Statement Under 37 CFR 1.497(d) Correction of Inventorship" ("Statement") signed by Anne Sorensen and Henrik Egesborg Hansen.

DISCUSSION

In the instant petition, applicants acknowledge that the national stage application was filed with a different inventive entity than that named in the international application, *i.e.*, PCT/DK00/00286.

37 CFR 1.497(d) applies when the inventorship in a national stage application filed under 35 U.S.C. 371 differs from that set forth in the international application (see 37 CFR 1.48(f)(1)). 37 CFR 1.497(d) states, in part:

> (d) If the oath or declaration filed pursuant to 35 U.S.C. 371(c)(4) and this section names an inventive entity different from the inventive entity set forth in the international application, the oath or declaration must be accompanied by:
>
> > (1) A statement from each person being added as an inventor . . . that any error in inventorship in the international application occurred without deceptive intention on his or her part;
> >
> > (2) The processing fee set forth in § 1.17(l); and
> >
> > (3) If an assignment has been executed by any of the original named inventors, the written consent of the assignees.

In the instant request, applicants filed a Statement signed by Anne Sorensen and Henrik Egesborg Hansen who request to be added as inventors in the above-captioned application. The Statement declares that the "error in omitting us [Ms. Sorensen and Mr. Hansen] from the above identified patent application as joint inventors occurred without deceptive intention on our part." This satisfies item (1) above.

The processing fee of $130.00 has been paid required by item (2) above.

Applicants also submitted an "Assignee Consent Under 37 CFR 1.497(d) Correction of Inventorship" signed by Lars Kelleberg, Vice President, Corporate Patents, Novo Nordisk A/S. The position of Vice President, Corporate Patents is a position recognized as having the authority to sign for a corporation. *See* § 324 Manual of Patent Examining Procedure.

Therefore, all the requirements of 37 CFR 1.497(d) are complete.

CONCLUSION

Applicants' request under 37 CFR 1.497(d) to add Anne Sorensen and Henrik Egesborg Hansen as joint inventors in the above-captioned application is **GRANTED**.

The declaration filed 27 November 2001 is now in compliance with 37 CFR 1.497(d).

Applicants have completed the requirements for acceptance under 35 U.S.C. 371(c). The application has an international filing date of 26 May 2000, under 35

U.S.C. 363, and a 35 U.S.C. 371 date of 27 November 2001.

This application is being forwarded to the United States Designated/Elected Office for further processing in accordance with this decision.

Boris Milef
PCT Legal Examiner
PCT Legal Office

James Thomson
Attorney Advisor
PCT Legal Office

Tel.: (703) 308-6457

SPE RESPONSE FOR CERTIFICATE OF CORRECTION

Paper No.: _____

DATE : August 29, 2005

TO SPE OF : ART UNIT 2834

SUBJECT : Request for Certificate of Correction on Patent No.: 6,803,671

A response is requested with respect to the accompanying request for a certificate of correction.

Please complete this form and return with file, within **7** days to:
Palm location **7580, Certificates of Correction Branch – South Tower – 9A22**
If response is for an IFW, **return to employee (named below) via PUBSCofC Team in MADRAS.**
With respect to the change(s) requested, correcting Office and/or Applicant's errors, should the patent read as shown in the certificate of correction (COCIN)? No new matter should be introduced, nor should the scope or meaning of the claims be changed.

Magdalene Talley

Thank You For Your Assistance

Certificates of Correction Branch
Tel. No. 703-308-9309 ext. 116

The request for issuing the above-identified correction(s) is hereby:
Note your decision on the appropriate box.

- ☐ **Approved** — **All** changes apply.
- ☐ **Approved in Part** — Specify below which changes **do not** apply.
- ☒ **Denied** — State the reasons for denial below.

Comments:

Changing "limited to" to —always— changes scope of claim 3.

BM 12/15/05

DARREN SCHUBERG
SUPERVISORY PATENT EXAMINER
TECHNOLOGY CENTER 2800

SPE

2834

Art Unit

UNITED STATES PATENT AND TRADEMARK OFFICE

COMMISSIONER FOR PATENTS
UNITED STATES PATENT AND TRADEMARK OFFICE
WASHINGTON, D.C. 20231
www.uspto.gov

#3

Kevin P. Moran
Michael Best & Friedrich LLP
3773 Corporate Parkway Suite 360
Center Valley, PA 18034

In re Application of	:	
Freese et al.	:	
Application No.: 09/979796	:	DECISION ON
PCT No.: PCT/US99/27846	:	
Int. Filing Date: 23 November 1999	:	PETITION UNDER
Priority Date: 25 November 1998	:	
Attorney Docket No.: 090402-9046	:	37 CFR 1.137(b)
For: Automatic Ambient Air Control System	:	
And Method For Refrigerated Container	:	

This is a decision on applicant's petition under 37 CFR 1.137(b) filed on 06 November 2001.

BACKGROUND

This international application was filed on 23 November 1999 and claimed a priority date of 25 November 1998. A Demand electing the United States was filed on 19 June 2000, which was prior to the elapse of 19 months from the priority date. Consequently, the thirty period for payment of the basic national fee in the United States expired as of midnight on 25 May 2001. This international application became abandoned with respect to the United States for failure to timely pay the required basic national fee.

On 06 November 2001, applicant filed the instant petition accompanied by, *inter alia*, a transmittal letter for entry into the national stage in the United States.

DISCUSSION

A grantable petition to revive an abandoned application under 37 CFR 1.137(b) must be accompanied by (1) the required reply, unless previously filed; (2) the petition fee as set forth in § 1.17(m); (3) a statement that the entire delay in filing the required reply from the due date for the reply until the filing of a grantable petition pursuant to this paragraph was unintentional. The Commissioner may require additional information where there is a question whether the delay was unintentional; and (4) any terminal disclaimer (and fee as set forth in § 1.20 (d)) required pursuant to paragraph (c) of this section.

Regarding requirement (1), the petition is accompanied by the required reply in the form of the required basic national fee.

Regarding requirement (2), the petition is accompanied by the petition fee.

Regarding requirement (3), the petition includes an appropriate statement.

Regarding requirement (4), no terminal disclaimer is required because the international filing date of this application is later than 8 June 1995.

DECISION

The petition is **GRANTED**.

Counsel's Deposit Account No. 09-0260 is being charged in the amount of $130.00 for the surcharge under 37 CFR 1.492(e).

This application is being forwarded to the United States Designated/Elected Office (DO/EO/US) for further processing. The date of this application under 35 U.S.C. 371 is **06 November 2001**.

Richard Cole
PCT Legal Examiner
PCT Legal Office

George Dombroske
PCT Legal Examiner
PCT Legal Office
Tel: (703) 308-6721
Fax: (703) 308-6459

UNITED STATES PATENT AND TRADEMARK OFFICE

Commissioner for Patents
United States Patent and Trademark Office
P.O. Box 1450
Alexandria, VA 22313-1450
www.uspto.gov

COPY MAILED

JUL 19 2005

OFFICE OF PETITIONS

E I DU PONT DE NEMOURS AND COMPANY
LEGAL PATENTS
WILMINGTON, DE 19898

In re Application of :
Joseph Anthony Perrotto et al :
Application No. 09/979,808 :
Filed: November 21, 2001 :
Attorney Docket No. CL-1453

ON PETITION

This is a decision on the petition, filed July 15, 2005 under 37 CFR 1.313(c)(2), to withdraw the above-identified application from issue after payment of the issue fee.

The petition is **GRANTED**.

The above-identified application is withdrawn from issue for consideration of a submission under 37 CFR 1.114 (request for continued examination). See 37 CFR 1.313(c)(2).

Petitioner is advised that the issue fee paid on December 7, 2004 in the above-identified application cannot be refunded. If, however, the above-identified application is again allowed, petitioner may request that it be applied towards the issue fee required by the new Notice of Allowance.[1]

The file does not indicate a change of address has been submitted, although the address given on the petition differs from the address of record. If appropriate, a change of address should be filed in accordance with MPEP 601.03. A courtesy copy of this decision is being mailed to the address given on the petition; however, the Office will mail all future correspondence solely to the address of record.

Telephone inquiries should be directed to Irvin Dingle at (571) 272-3210.

This matter is being referred to Technology Center AU 3765 for processing of the request for continued examination under 37 CFR 1.114 and for consideration of the concurrently filed Information Disclosure Statement.

Irvin Dingle
Petitions Examiner
Office of Petitions
Office of the Deputy Commissioner
for Patent Examination Policy

cc:
E I Du Pont de Nemours and Co.
4417 Lancaster Pike
25-1210 Barley Mill Plaza
Wilmington, DE 19805

---

[1] The request to apply the issue fee to the new Notice may be satisfied by completing and returning the new Issue Fee Transmittal Form PTOL-85(b), which includes the following language thereon: Commissioner for Patents is requested to apply the Issue Fee and Publication Fee (if any) or re-apply any previously paid issue fee to the application identified above. Petitioner is advised that, whether a fee is indicated as being due or not, the Issue Fee Transmittal Form **must** be completed and timely submitted to avoid abandonment. Note the language in bold text on the first page of the Notice of Allowance and Fee(s) Due (PTOL-85).

MAY 1 5 2002

UNITED STATES PATENT AND TRADEMARK OFFICE

Laura A Coruzzi
Pennie & Edmonds
1155 Avenue of the Americas
New York, NY 10036-2711

In re Application of NAUGHTON et al.	DECISION ON
Application No.: 09/979,813	
PCT No.: PCT/US00/13016	REQUEST FOR
Int. Filing Date: 12 May 2000	
Priority Date: 14 May 1999	RESTARTING OF TIME PERIOD
Attorney's Docket No.: 6261-223-999	
For: CONDITIONED CELL CULTURE MEDIUM	FOR RESPONSE
COMPOSITIONS AND METHODS OF USE	

This is a decision on applicants' Petition to Reset the Period for Reply due to Late Receipt under MPEP 710.06 filed in the United States Patent and Trademark Office on 03 April 2002. Applicant requests the restarting of the time period to respond to a Notification of Missing Requirements mailed on 22 January 2002.

BACKGROUND

On 22 January 2002, a Notification of Missing Requirements was mailed to applicants indicating that an oath or declaration in compliance with 37 CFR 1.497(a) and (b) was required. A two (2) month time period within which to respond was set. Extensions of time under 37 CFR 1.136(a) were available.

On 03 April 2002, applicants filed the instant request to reset the time period for reply due to the law firm's receipt of the Notification on 20 March 2002. Counsel provided a copy of the Notification bearing the firm's receipt date of "MAR 20 2002". Counsel requests that the time period to respond to the Notification be reset to begin on 20 March 2002.

DISCUSSION

Section 710.06 of the Manual of Patent Examining Procedure (MPEP) states the Office will grant a petition to restart the previously set period for reply to an Office action to run from the date of receipt of the Office action at the correspondence address when the following criteria are met:

(A) the petition is filed within 2 weeks of the date of receipt of the Office action at the correspondence address;

(B) a substantial portion of the set reply period had elapsed on the date of receipt (e.g., at least 1 month of a 2- or 3-month reply period had elapsed); and

(C) the petition includes (1) evidence showing the date of receipt of the Office action at the correspondence address (e.g., a copy of the Office action having the date of receipt of the Office action at the correspondence address stamped thereon, a copy of the envelope (which contained the Office action) having the date of receipt of the Office action at the correspondence address stamped thereon, etc.), and (2) a statement setting forth the date of receipt of the Office action at the correspondence address and explaining how the evidence being presented establishes the date of receipt of the Office action at the correspondence address.

Applicants claim that the Notification of Missing Requirements mailed 22 January 2002 was not received until 20 March 2002. The instant petition was filed on 03 April 2002. Thus, item (A) is satisfied.

Item (B) is also satisfied because the two month period to reply to the Notification of Missing Requirements mailed 22 January 2002 would expire on 22 March 2002, two days after the Office action was purportedly received.

Concerning item (C), applicants included a copy of the Office action which has a date-stamp of "20 March 2002" and marked "Received". Applicants also state that the Notification, despite its listed 22 January 2002 mailing date, "was not received by Applicants' attorneys until March 20, 2002....as evidenced by the receiving stamp on the Notification." A copy of the envelope which contained the Office action was not submitted with the instant petition.

The exhibit accompanying the present petition establishes that the "Notification of Missing Requirements" was received on 20 March 2002. Counsel's statement explained how the evidence presented establishes the date of receipt of the Office action at the correspondence address required by 710.06(C)(2) of the MPEP above. Sufficient evidence has been presented to show that the Office action was not received until two days before the response was due. Applicants' request to reset a period for reply due to late receipt of an Office action is hereby **GRANTED**.

CONCLUSION

Applicants' request is **GRANTED**. The period of time to respond to the decision is extended to **May 20, 2002**, which is two months from the firm's receipt date of the Notification.

It is noted that extensions of time may be obtained under 37 CFR 1.136(a).

The application will be forwarded to United States Designated Elected Office to await applicant's response.

Leonard E. Smith
Legal Examiner
PCT Legal Office

Cynthia M. Kratz
Attorney Advisor
PCT Legal Office

CMK/LES:cmk

Telephone: (703) 306-5467

2 9 NOV 2002

UNITED STATES PATENT AND TRADEMARK OFFICE

COMMISSIONER FOR PATENTS
UNITED STATES PATENT AND TRADEMARK OFFICE
WASHINGTON, D.C. 20231
www.uspto.gov

SUGHRUE MION, PLLC
1010 El Camino Real, Suite 360
Menlo Park, CA 94025

In re Application of MONDSZEIN, Karl *et al* U.S. Application No.: 09/979,895 PCT No.: PCT/GB00/01704 Int. Filing Date: 05 May 2000 Priority Date: 18 May 1999 Attorney Docket No.: CQ10068 For: BEVERAGE CONTAINER	: : : : : : : :	**DECISION ON PETITION UNDER 37 CFR 1.47(a)**

This is a decision on applicants' "Petition under 37 C.F.R. § 1.47(a)" filed on 20 August 2002.

BACKGROUND

On 14 January 2002, the United States Designated/Elected Office (DO/EO/US) mailed a Notification of Missing Requirements under 35 U.S.C. 371 (Form PCT/DO/EO/905) indicating that an oath/declaration in compliance with 37 CFR 1.497(a) and (b) and a surcharge fee of $130.00 pursuant to 37 CFR 1.492(e) must be provided. Applicants were given two months to respond.

On 20 August 2002, applicants submitted the instant petition which was accompanied by, *inter alia*, the $130.00 petition fee; a five-month extension and $1,960 extension fee; a declaration signed by two of the three listed joint inventors; a declaration of Stephen N. Rackman ("Rackman Decl."); and copies of Royal Mail tracking documents.

DISCUSSION

A petition under 37 CFR 1.47(a) must be accompanied by: (1) the required petition fee; (2) factual proof that the missing joint inventor cannot be found or reached after diligent effort; (3) a statement of the last known address of the missing joint inventor; (4) and an oath or declaration executed by the signing joint inventor on his behalf and on behalf of the non-signing joint inventor.

Concerning item (1), the $130.00 petition fee has been paid.

With regard to item (3), applicants state that the last known address of the nonsigning co-inventor, Mark Radford is:

Priory House
Silsoe Road

Waredges, Flitton,
Bedfordshire MK45 533
United Kingdom

This information satisfies item (3).

Regarding item (4), applicants included a Declaration signed by two of the three listed joint inventors, Karl Mondszein and Sian Bronwyn Gastall. The nonsigning co-inventor's name, residence, post office address and citizenship are typed on the declaration. This declaration satisfies the requirements of section 409.03(a) of the Manual of Patent Examining Procedure (MPEP) and is in compliance with 37 CFR 1.497(a) and (b). Thus, item (4) has also been satisfied.

However, applicants have not sufficiently met the requirements of item (2).

Applicants' burden in proving that an inventor cannot be located pursuant to item (2) is explained in section 409.03(d) of the Manual of Patent Examining Procedure (MPEP) which states, in part:

> Where inability to find or reach a nonsigning inventor "after diligent effort" is the reason for filing under 37 CFR 1.47, a statement of facts should be submitted that fully describes the exact facts which are relied on to establish that a diligent effort was made . . .
>
> The statement of facts **must be signed**, where at all possible, by a **person having firsthand knowledge** of the facts recited therein. Statements based on hearsay will not normally be accepted. **Copies of documentary evidence such as internet searches, certified mail return receipts, cover letters of instructions, telegrams, that support a finding that the nonsigning inventor could not be found or reached should be made part of the statement.** (Emphasis added).

In the instant petition, applicants submitted a declaration by British patent attorney, Stephen N. Rackman who stated that "[b]oth Ms. Dawn Perkins and Mr. Brendan Jonson (two of his assistants) have made efforts to contact . . . Mark Philip Radford, to get him to sign the necessary Declaration and Power of Attorney." Rackman Decl. at ¶ 3. Mr. Rackman listed the steps his firm used to locate the missing joint inventor including sending a Recorded Delivery through the mail on 19 June 2002, attempting to locate a telephone number for Mr. Radford, and attempting to obtain a forwarding address for Mr. Radford through his former employer. Rackman Decl. at ¶¶ 6-9.

However, it does not appear that Mr. Rackman has the requisite firsthand

knowledge of the facts as required by the MPEP. As stated above, a declaration by a person having firsthand knowledge of the steps taken to locate Mr. Radford is required In this case, an affidavit or declaration by Ms. Dawn Perkins or Mr. Brendan Jonson should be submitted. In addition, any documentary evidence received in conjunction with the search for the missing nonsigning joint inventor such as paper copies of any internet searches, copies of letters or emails to and from the nonsigning joint inventors' former employer should be provided in the renewed petition.

Thus, all of the requirements of 37 CFR 1.47(a) are not yet complete.

CONCLUSION

For the reasons discussed above, the petition under 37 CFR 1.47(a) is **DISMISSED** without prejudice.

If reconsideration on the merits of this petition is desired, a proper response must be filed within **TWO (2) MONTHS** from the mail date of this decision. Any reconsideration request should include a cover letter entitled "Renewed Petition Under 37 CFR 1.47(a)." Extensions of time may be obtained under 37 CFR 1.136(a).

Please direct further correspondence with respect to this matter to the Assistant Commissioner for Patents, Box PCT, Washington, D.C. 20231, and address the contents of the letter to the attention of the PCT Legal Office.

James Thomson

James Thomson
Attorney Advisor
PCT Legal Office

Tel.: (703) 308-6457

13 MAR 2003

UNITED STATES PATENT AND TRADEMARK OFFICE

COMMISSIONER FOR PATENTS
UNITED STATES PATENT AND TRADEMARK OFFICE
WASHINGTON, D.C. 20231
www.uspto.gov

SUGHRUE MION, PLLC
1010 El Camino Real, Suite 360
Menlo Park, CA 94025

In re Application of
MONDSZEIN, Karl *et al*
U.S. Application No.: 09/979,895
PCT No.: PCT/GB00/01704
Int. Filing Date: 05 May 2000
Priority Date: 18 May 1999
Attorney Docket No.: CQ10068
For: BEVERAGE CONTAINER

DECISION ON RENEWED PETITION UNDER 37 CFR 1.47(a)

This decision is in response to applicants' "Submission of Renewed Petition Under 37 C.F.R. § 1.47(a)" submitted 03 February 2003.

BACKGROUND

On 29 November 2002, a decision dismissing applicants' petition under 37 CFR 1.47(a) was mailed because applicants failed to meet the requirements of item (2). Applicants were given two months to respond.

On 03 February 2003, applicants filed the instant renewed petition which was accompanied by, *inter alia*, a "Declaration of Brendon M. Jonson" and a "Declaration of Dawn E. Perkins."

DISCUSSION

In the original petition, applicants failed to satisfy item (2) of 37 CFR 1.47(a). Applicants submitted a declaration by British patent attorney, Stephen N. Rackman who detailed the efforts used to contact the nonsigning inventors. However, it did not appear that Mr. Rackman had the requisite firsthand knowledge of the facts from his declaration. An affidavit or declaration by Ms. Dawn Perkins or Mr. Brendan Jonson was requested with any renewed petition.

In the instant renewed petition, applicants included declarations by Brendon M. Jonson and Dawn E. Perkins as requested. Ms. Perkins and Ms. Jonson affirm the facts listed in the declaration of Mr. Rackman previously submitted on 20 August 2002. The declarations provide the requisite information to establish that a diligent effort was made to locate Mr. Radford. The information provided in the renewed petition is sufficient to satisfy item (2) of 37 CFR 1.47(a).

Therefore, all the requirements of 37 CFR 1.47(a) are now complete.

CONCLUSION

Applicants' renewed petition under 37 CFR 1.47(a) is **GRANTED**.

Applicants have completed the requirements for acceptance under 35 U.S.C. § 371(c). The application has an international filing date of 05 May 2000 under 35 U.S.C. 363, and a 35 U.S.C. 371(c) date of **20 August 2002**.

As provided in 37 CFR 1.47(a), a notice of the filing of this application will be forwarded to the non-signing inventor at his last known address of record and will be published in the Official Gazette.

This application is being forwarded to the National Stage Processing Division of the Office of PCT Operations for continued processing.

James Thomson

James Thomson
Attorney Advisor
PCT Legal Office

Tel.: (703) 308-6457

UNITED STATES PATENT and TRADEMARK OFFICE
UNDER SECRETARY OF COMMERCE FOR INTELLECTUAL PROPERTY AND
DIRECTOR OF THE UNITED STATES PATENT AND TRADEMARK OFFICE
WASHINGTON, D.C. 20231
WWW.USPTO.GOV

td

Mailed: MAY 17 2004

In re application of
Karl Mondszein et al.
Serial No. 09/979,895
Filed: August 20,2002
For: BEVERAGE CONTAINER

DECISION ON PETITION

This is a decision on the PETITION UNDER 37 CFR 1.181 TO WITHDRAW THE FINALITY OF THE OFFICE ACTION mailed January 15, 2004.

On July 21, 2003, a non-final office action was mailed to applicant rejecting the claims under 35 USC 112, first and second paragraphs and under 35 USC 101. A reply to the office action was filed by applicants on October 21, 2003. In the reply, applicants made one amendment to a dependent claim. A final office action was mailed by the office on January 15, 2004 containing new grounds of rejection under 35 USC 103 rejecting all pending claims. Applicants filed an after final amendment on March 3, 2004. The examiner prepared an advisory action which was mailed on April 6, 2004 denying entry of the after final amendment.

On January 28, 2004 the instant petition under 37 CFR 1.181 was timely filed to formally request the withdrawal of finality of the January 15, 2004 office action.

Petitioner's position for the withdrawal of the finality is that the new grounds of rejection in the final office action were not necessitated by applicant's amendments to the claims.

DECISION

Section 706.07 of the MPEP states:

706.07(a) Final Rejection, When Proper on Second Action

Under present practice, second or any subsequent actions on the merits shall be final, except where the examiner introduces a new ground of rejection that is neither necessitated by applicant's amendment of the claims nor based on information submitted in an information disclosure statement filed during the period set forth in 37 CFR 1.97(c) with the fee set forth in 37 CFR 1.17(p).

Petitioner argues that because independent claim was not amended by applicants in the response filed October 21, 2003, the new grounds of rejection were clearly not necessitated by applicant's amendments to the claims. This is clearly the case and the argument is persuasive. The finality of the office action was in fact improper

Accordingly, the petition for withdrawal of finality is **GRANTED.** Because the finality has been withdrawn, the amendment filed on March 3, 2004 will be treated as an amendment under 1.111 and will be entered. The examiner will consider the claims in light of said amendment and prepare a new office action in response to said amendment.

JMStone

Jacqueline M. Stone, Director
Technology Center 1700
Chemical and Materials Engineering

SUGHRUE MION, PLLC
401 Castro Street, Ste 220
Mountain View CA 94041-2007

UNITED STATES PATENT AND TRADEMARK OFFICE

Commissioner for Patents
United States Patent and Trademark Office
P.O. Box 1450
Alexandria, VA 22313-1450
www.uspto.gov

COPY MAILED
SEP 12 2008

HEWLETT PACKARD COMPANY
P O BOX 272400, 3404 E. HARMONY ROAD
INTELLECTUAL PROPERTY ADMINISTRATION
FORT COLLINS CO 80527-2400

In re Application of	:	
Graeme John Proudler et al.	:	DECISION ON PETITION
Application No. 09/979,903	:	
Filed: November 27, 2001	:	
Attorney Docket No. **30990076-4**	:	

This is a decision on the petition filed August 20. 2008 under 37 C.F.R. § 1.181.

The petition to withdraw the holding of abandonment is **DISMISSED**.

Any request for reconsideration of this decision must be submitted within **TWO (2) MONTHS** from the mail date of this decision. Extensions of time under 37 CFR 1.136(a) are permitted. The reconsideration request should include a cover letter entitled "Renewed Petition under 37 CFR 1.181," or, as explained in more detail below, "...under 37 CFR 1.137(a)" or (b). This is not a final agency decision.

In response to a Notice of Allowance mailed April 2, 2008, the issue fee transmittal was timely submitted on April 25, 2008, however the issue fee transmittal was not accompanied by a check for the fees and neither did it contain an authorization to charge the issue fee to a deposit account or credit card and thus the application became abandoned July 3, 2008. Accordingly a Notice of Abandonment was mailed August 4, 2008.

Petitioner argues that the EFS Acknowledgment listed the Customer Number that is associated with the Hewlett-Packard Development Company L.P. (Applicant's assignee) Deposit Account number and while petitioner inadvertently left the account number off the transmittal at section 4b, they had checked off the box authorizing to charge the deposit account number.

While petitioner's arguments have been considered they are not persuasive. It is the responsibility of the deposit account owner to identify the deposit account or provide some other method of payment. The issue fee was not timely paid and in view thereof, the showing of record is insufficient to warrant withdrawal of the holding of abandonment.

ALTERNATIVE VENUES

Petitioner may wish to consider filing a renewed petition under 37 CFR 1.137(a)[1] or 37 CFR 1.137(b),[2] which now provides that where the delay in reply was unintentional, a petition may be filed to revive an abandoned application or a lapsed patent pursuant to 37 CFR 1.137(b).

The filing of a petition under the unintentional standard cannot be intentionally delayed and therefore should be filed promptly. A person seeking revival due to unintentional delay cannot make a statement that the delay was unintentional unless the entire delay, including the delay from the date it was discovered that the application was abandoned until the filing of the petition to revive under 37 CFR 1.137(b), was unintentional. A statement that the delay was unintentional is not appropriate if petitioner intentionally delayed the filing of a petition for revival under 37 CFR 1.137(b).

Further correspondence with respect to this matter should be addressed as follows:

By mail: Mail Stop Petition
Commissioner for Patents
P.O. Box 1450

---

[1]A grantable petition under 37 CFR 1.137(a) must be accompanied by:

(1) the required reply, unless previously filed; In a nonprovisional application abandoned for failure to prosecute, the required reply may be met by the filing of a continuing application. In a nonprovisional utility or plant application filed on or after June 8, 1995, and abandoned for failure to prosecute, the required reply may also be met by the filing of a request for continued examination in compliance with § 1.114. In an application or patent, abandoned or lapsed for failure to pay the issue fee or any portion thereof, the required reply must be the payment of the issue fee or any outstanding balance thereof.
(2) the petition fee as set forth in 37 CFR 1.17(l);
(3) a showing to the satisfaction of the Commissioner that the entire delay in filing the required reply from the due date for the reply until the filing of a grantable petition pursuant to 37 CFR 1.137(a) was unavoidable; and
(4) any terminal disclaimer (and fee as set forth in 37 CFR 1.20(d)) required pursuant to 37 CFR 1.137(c)).

[2]Effective December 1, 1997, the provisions of 37 CFR 1.137(b) now provide that where the delay in reply was unintentional, a petition may be filed to revive an abandoned application or a lapsed patent pursuant to 37 CFR 1.137(b). A grantable petition filed under the provisions of 37 CFR 1.137(b) must be accompanied by:

(1) the required reply, unless previously filed. In a nonprovisional application abandoned for failure to prosecute, the required reply may be met by the filing of a continuing application. In a nonprovisional application filed on or after June 8, 1995, and abandoned for failure to prosecute, the required reply may also be met by the filing of a request for continued examination in compliance with § 1.114. In an application or patent, abandoned or lapsed for failure to pay the issue fee or any portion thereof, the required reply must be the payment of the issue fee or any outstanding balance thereof. In an application abandoned for failure to pay the publication fee, the required reply must include payment of the publication fee.
(2) the petition fee as set forth in 37 CFR 1.17(m);
(3) a statement that the entire delay in filing the required reply from the due date for the reply until the filing of a grantable petition pursuant to 37 CFR 1.137(b) was unintentional. The Commissioner may required additional information where there is a question whether the delay was unintentional; and
(4) any terminal disclaimer (and fee as set forth in 37 CFR 1.20(d)) required pursuant to 37 CFR 1.137(c)).

Alexandria, VA 22313-1450

By FAX: (571) 273-8300

Telephone inquiries concerning this matter may be directed to the undersigned Petitions Attorney at (571) 272-3212.

Patricia Faison-Ball

Patricia Faison-Ball
Senior Petitions Attorney
Office of Petitions

UNITED STATES PATENT AND TRADEMARK OFFICE

Commissioner for Patents
United States Patent and Trademark Office
P.O. Box 1450
Alexandria, VA 22313-1450
www.uspto.gov

HEWLETT PACKARD COMPANY
P O BOX 272400, 3404 E. HARMONY ROAD
INTELLECTUAL PROPERTY ADMINISTRATION
FORT COLLINS CO 80527-2400
90

COPY MAILED

OCT 2 2 2008

OFFICE OF PETITIONS

In re Application of	:	
Graeme John Proudler et al.	:	DECISION ON PETITION
Application No. 09/979,903	:	
Filed: November 27, 2001	:	
Attorney Docket No. **30990076-4**	:	

This is a decision on the petition filed September 23, 2008 under 37 C.F.R. § 1.137(b).

The petition is **GRANTED**.

In response to a Notice of Allowance mailed April 2, 2008, the issue fee transmittal was timely submitted on April 25, 2008, however the issue fee transmittal was not accompanied by a check for the fees and neither did it contain an authorization to charge the issue fee to a deposit account or credit card and thus the application became abandoned July 3, 2008. Accordingly a Notice of Abandonment was mailed August 4, 2008.

All other requirements under 37 CFR 1.137(b) having been met, this matter is being referred to the Publishing Division.

Telephone inquiries concerning this matter may be directed to the undersigned Petitions Attorney at (571) 272-3212.

Patricia Faison-Ball

Patricia Faison-Ball
Senior Petitions Attorney
Office of Petitions

UNITED STATES PATENT AND TRADEMARK OFFICE

Commissioner for Patents
United States Patent and Trademark Office
P.O. Box 1450
Alexandria, VA 22313-1450
www.uspto.gov

MYERS BIGEL SIBLEY & SAJOVEC
PO BOX 37428
RALEIGH NC 27627

COPY MAILED
JUN 22 2005
OFFICE OF PETITIONS

In re	: DECISION REGARDING
Anbuky, et al.	: PATENT TERM ADJUSTMENT
Application No. 09/979,906	:
Filed: November 27, 2001	:
Attorney Docket No. 9270-3	:
	:

This is a decision on the "APPLICATION FOR PATENT TERM ADJUSTMENT", filed June 21, 2004. Applicants request that the initial determination of patent term adjustment under 35 U.S.C. 154(b) be corrected from zero (0) days to eighty-seven (87) days.

The application for patent term adjustment is **GRANTED** to the extent indicated herein.

The Office has updated the PAIR screen to reflect that the correct Patent Term Adjustment (PTA) determination at the time of the mailing of the Notice of Allowance is **seventy-two (72) days**. A copy of the updated PAIR screen, showing the correct determination, is enclosed.

On March 29, 2004, the Office mailed the Determination of Patent Term Adjustment under 35 U.S.C. 154(b) in the above-identified application. The Notice stated that the patent term adjustment (PTA) to date is zero (0) days. On June 21, 2004, Applicants

timely[1] submitted the instant application for patent term adjustment, asserting that the correct number of days of PTA at the time of the mailing of the Notice of Allowance is eighty-seven (87) days.

Applicants state that the patent issuing from the application is not subject to a terminal disclaimer.

Applicants assert entitlement to a patent term adjustment of eighty-seven (87) days on the basis that the PTO improperly assessed Applicants a delay of one hundred one (101) days for responding to an Office action mailed on May 29, 2003. Applicants assert that they timely filed a response on August 29, 2003, within the three month period pursuant to 37 C.F.R. §1.704(b), not on December 8, 2003.

The Office initially determined a patent term adjustment of zero (0) days based on an adjustment for PTO delay of one hundred twenty-two (122) days pursuant to 35 U.S.C. 154(b)(1)(A)(i) and 37 C.F.R. §1.703(a)(1), reduced by Applicants' delay of one hundred one (101) days pursuant to 35 U.S.C. 154(b)(2)(C)(ii) and 37 C.F.R. §1.704(b) and thirty-five (35) days pursuant to 35 U.S.C. 154(b)(2)(C)(i) and 37 C.F.R. §1.704(c)(8). The adjustments of 101 and 35 days are at issue.

The adjustment of 101 days has been found to be incorrect. Applicants have submitted a copy of a postcard receipt for the instant application, itemizing an "Amendment", and bearing a USPTO date stamp of September 3, 2003. A postcard receipt which itemizes and properly identifies the items which are being filed serves as prima facie evidence of receipt in the USPTO of all the items listed thereon on the date stamped thereon by the USPTO.[2] Accordingly, it is concluded that Applicants filed a complete reply in response to the May 29, 2003 Office action on September 3, 2003, and therefore should not have been assessed a delay of one hundred one (101) days. Applicants argue that because they included a Certificate of Mailing dated August 29, 2003, their response was timely. While the Certificate of Mailing did make the response timely for purposes of avoiding abandonment, under 37 C.F.R. §1.703(f), "the date indicated on any certificate of mailing or transmission shall not be taken into account" in the PTA calculation. See also Changes to

---

[1] Applicants filed the application for patent term adjustment on the same date as the issue fee.

[2] MPEP 503.

Implement Patent Term Adjustment under Twenty-Year Patent Term; Final Rule, 1239 OG 14 (Oct. 3 2000). Accordingly, applicants should have been assessed applicant delay of five (5) days, not one hundred one (101) days.

The applicant delay of thirty-five (35) days for the filing of a supplemental IDS on January 12, 2004 was calculated using the December 8, 2003 filing date for the amendment. However, applicants have demonstrated that the amendment was filed on September 3, 2003. Accordingly, pursuant to 37 C.F.R. §1.704(c)(8), applicants should have been assessed applicant delay of one hundred thirty-one (131) days, not thirty-five (35) days.

Lastly, in view of applicant's amendment filed September 3, 2003, the Office should have been assessed eighty-six (86) days of PTO delay pursuant to 37 C.F.R. §1.703(a)(2), because the Notice of Allowance was not mailed until March 29, 2004.

In view thereof, the correct determination of patent term adjustment at the time of the mailing of the Notice of Allowance is **seventy-two (72) days** (208 (122+86) days of PTO delay and 136 (131+5) days of applicant delay).

Receipt of the $200.00 fee set forth in 37 C.F.R. §1.18(e) is acknowledged.

The application file is being forwarded to the Office of Patent Publication for processing into a patent.

Telephone inquiries specific to this matter should be directed to Cliff Congo, Petitions Attorney, at (571)272-3207.

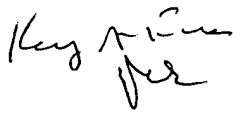

Karin Ferriter
Senior Legal Advisor
Office of Patent Legal Administration
Office of Deputy Commissioner
for Patent Examination Policy

Enclosure: Copy of Revised PAIR Screen

UNITED STATES PATENT AND TRADEMARK OFFICE

UNITED STATES DEPARTMENT OF COMMERCE
United States Patent and Trademark Office
Address: COMMISSIONER FOR PATENTS
P.O. Box 1450
Alexandria, Virginia 22313-1450
www.uspto.gov

APPLICATION NO.	FILING DATE	FIRST NAMED INVENTOR	ATTORNEY DOCKET NO.	CONFIRMATION NO.
09/979,906	11/27/2001	Adnan H. Anbuky	9270-3	7413

20792 7590 09/26/2005

MYERS BIGEL SIBLEY & SAJOVEC
PO BOX 37428
RALEIGH, NC 27627

EXAMINER
TIBBITS, PIA FLORENCE

ART UNIT	PAPER NUMBER
2838	

DATE MAILED: 09/26/2005

Please find below and/or attached an Office communication concerning this application or proceeding.

SPE RESPONSE FOR CERTIFICATE OF CORRECTION

Paper No.:20050915

DATE : September 15, 2005

TO SPE OF : ART UNIT 2838

SUBJECT : Request for Certificate of Correction on Patent No.: 6924622

A response is requested with respect to the accompanying request for a certificate of correction.

Please complete this form and return with file, within **7** days to:
Certificates of Correction Branch - PK 3-910
Palm location **7590** - Tel. No. 305-8201

With respect to the change(s) requested, correcting Office and/or Applicant's errors, should the patent read as shown in the certificate of correction? No new matter should be introduced, nor should the scope or meaning of the claims be changed.

Thank You For Your Assistance **Certificates of Correction Branch**

The request for issuing the above-identified correction(s) is hereby:
Note your decision on the appropriate box.

☒ **Approved** **All** changes apply.

☐ **Approved in Part** Specify below which changes **do not** apply.

☐ **Denied** State the reasons for denial below.

Comments:

SPE: Mike Sherry **Art Unit** 2838

07 OCT 200

UNITED STATES PATENT AND TRADEMARK OFFICE

COMMISSIONER FOR PATENTS
UNITED STATES PATENT AND TRADEMARK OFFICE
P.O. BOX 1450
ALEXANDRIA, VA 22313-1450
www.uspto.gov

OIPE JC200
DEC 3 1 2003
PATENT & TRADEMARK OFFICE

Paul Clark
Clark & Elbing LLP
101 Federal Street
Boston, MA 02110

In re Application of NAGAI et al	:	
U.S. Application No.: 09/979,908	:	
PCT Application No.: PCT/JP00/06051	:	
Int. Filing Date: 06 September 2000	:	DECISION
Priority Date Claimed: 06 September 1999	:	
Attorney Docket No.: 50026/030001	:	
For: PARAMYXOVIRUES HAVING MODIFIED	:	
TRANSCRIPTION INITIATION	:	
SEQUENCE	:	

This is in response to applicant's "Transmittal of Petition Under 37 C.F.R. § 1.182" filed 30 September 2003.

BACKGROUND

On 06 September 2000, applicant filed international application PCT/JP00/06051, which claimed priority of an earlier Japan application filed 06 September 1999. A copy of the international application was communicated to the USPTO from the International Bureau on 15 March 2001. A Demand for international preliminary examination, in which the United States was elected, was filed on 15 February 2001, prior to the expiration of nineteen months from the priority date. Accordingly, the thirty-month period for paying the basic national fee in the United States expired on 06 March 2002.

On 28 November 2001, applicant filed national stage papers in the United States Designated/Elected Office (DO/EO/US). The submission was accompanied by, *inter alia*, the basic national fee required by 35 U.S.C. 371(c)(1).

On 30 January 2002, the DO/EO/US mailed a Notification of Missing Requirements Under 35 U.S.C. 371 (Form PCT/DO/EO/905), which indicated that an oath or declaration in compliance with 37 CFR 1.497 must be filed.

On 27 March 2002, applicant filed an executed declaration.

On 26 April 2002, the DO/EO/US mailed a Notification of Defective Response (Form PCT/DO/EO/916), which indicated that the declaration filed 27 March 2002 did not list all of the inventors.

On 05 August 2002, applicant filed a response to the notification mailed 26 April 2002.

On 15 January 2003, the DO/EO/US mailed a Notification of Abandonment (Form PCT/DO/EO/909).

On 14 March 2003, applicant purportedly filed a petition under 37 CFR 1.182.

On 16 September 2003, this Office mailed a decision vacating the Notification of Abandonment mailed 15 January 2003.

On 30 September 2003, applicant filed a copy of the petition under 37 CFR 1.182 purportedly filed on 14 March 2003.

DISCUSSION

The evidence of record is sufficient to establish that the petition under 37 CFR 1.182 was originally filed on 14 March 2003. Specifically, the copy of the return postcard, which includes a "Petition Under 37 CFR 1.182" in its itemized contents and which bears a USPTO date stamp of 14 March 2003, serves as *prima facie* evidence that the petition was received by the USPTO on 14 March 2003.

Pursuant to 35 U.S.C. 111(a)(4), the filing date of an application shall be the date on which the specification and any required drawing are received in the USPTO. In the present case, the papers submitted on 28 November 2001 contained a specification and drawings.

CONCLUSION

For the reasons above, the petition under 37 CFR 1.182 is GRANTED.

This application is being forwarded to the United States Designated/Elected Office (DO/EO/US) for further processing in accordance with this decision including: (1) applying the submitted fees towards the filing fee for a regular United States application and (2) forwarding the application to the Office of Initial Patent Examination for processing as a continuation-in-part application under 35 U.S.C. 111(a) with a filing date of 28 November 2001.

Bryan Tung
PCT Legal Examiner
PCT Legal Office

Telephone: 703-308-6614
Facsimile: 703-308-6459

UNITED STATES PATENT AND TRADEMARK OFFICE

Commissioner for Patents
United States Patent and Trademark Office
P.O. Box 1450
Alexandria, VA 22313-1450
www.uspto.gov

NOV 5 2004

CLARK & ELBING LLP
101 FEDERAL STREET
BOSTON MA 02110

In re Application of	:
Yoshiyuki Nagai et al	:
Serial No.: 09/979,908	: PETITION DECISION
Filed: November 28, 2001	:
Attorney Docket No.: 50026/030001	:

This is a response to the petitions under 37 CFR 1.59(b), filed March 15, 2004, to expunge information from the above identified application. This application has been assigned for examination, but no action has been taken as of the date of mailing of this decision.

Petitioner requests that documents submitted August 6, 2003, as a Proprietary Information Disclosure Statement be expunged from the record. Petitioner states either: (A) that the information contains trade secret material, proprietary material and/or material that is subject to a protective order which has not been made public; or (B) that the information submitted was unintentionally submitted and the failure to obtain its return would cause irreparable harm to the party who submitted the information or to the party in interest on whose behalf the information was submitted, and the information has not otherwise been made public. The petition fee set forth in 37 CFR 1.17(h) has been paid.

This is an unexamined application. As such the information provided has not been reviewed and the petition cannot be granted at this time. As stated in M.P.E.P. 724, upon allowance or other action closing prosecution in an application petition may be made for return of Proprietary Information Disclosure Statements.

The request to redact the Form 1449 submitted August 6, 2003, which lists the proprietary documents, and replace it with a newly submitted Form 1449 will not be accommodated inasmuch as it was not submitted with the indication that some of the listed documents are proprietary.

The petition is **DISMISSED**. Applicants may resubmit the petition subsequent to allowance or other action which closes prosecution being mailed in the application. No additional petition fee will be required at that time.

Should there be any questions with respect to this decision, please contact William R. Dixon, Jr., by mail addressed to: Director, Technology Center 1600, P.O. Box 1450, Alexandria, VA 22313-1450, or by telephone at 571-272-0519 or by facsimile transmission at general Office facsimile number, 703-872-9306.

Jasemine C. Chambers

Jasemine C. Chambers
Director, Technology Center 1600

SPE RESPONSE FOR CERTIFICATE OF CORRECTION

Paper No.: _____

DATE : 6/14/07

TO SPE OF : ART UNIT 1648

SUBJECT : Request for Certificate of Correction on Patent No.: 7144579

A response is requested with respect to the accompanying request for a certificate of correction.

Please complete this form and return with file, within 7 days to:
Palm location **7580, Certificates of Correction Branch – South Tower – 9A22**
If response is for an IFW, **return to employee (named below) via PUBSCofC Team in MADRAS.**
With respect to the change(s) requested, correcting Office and/or Applicant's errors, should the patent read as shown in the certificate of correction (COCIN)? No new matter should be introduced, nor should the scope or meaning of the claims be changed.

Valerie Jackson

Thank You For Your Assistance

Certificates of Correction Branch
Tel. No. 703-308-9390 ext. 114

The request for issuing the above-identified correction(s) is hereby:
Note your decision on the appropriate box.

- ☒ **Approved** — All changes apply.
- ☐ **Approved in Part** — Specify below which changes **do not** apply.
- ☐ **Denied** — State the reasons for denial below.

Comments:

The Sequence Listing was received by the USPTO on May 30, 2006 and entered on June 6, 2006. However, all 54 sequences were not included with the issued patent.

~~PATRICK J. NOLAN, PH.D.~~
SUPERVISORY PATENT EXAMINER

Patrick J Nolan
SPE

1648
Art Unit

MAR 2 7 2002

#3

UNITED STATES PATENT AND TRADEMARK OFFICE

COMMISSIONER FOR PATENTS
UNITED STATES PATENT AND TRADEMARK OFFICE
WASHINGTON, DC 2023
www.uspto.gov

John A. Sopp
Millen, White, Zelano & Branigan, P.C.
2200 Clarendon Blvd.
Suite 1400
Arlington, VA 22201

In re Application of	:
KLAR, Ulrich	:
US Application No.: 09/979,939	:
PCT Application No.: PCT/IB00/00657	: DECISION ON
Int. Filing Date: 01 May 2000	:
Priority Date: 30 April 1999	: PETITION UNDER
Attorney's File Reference: SCH 1751	:
For: 6-ALKENYL-, 6-ALKINYL- AND 6-EPOXY-EPOTHILONE DERIVATIVES, PROCESS FOR THEIR PRODUCTION, AND THEIR USE IN PHARMACEUTICAL PREPARATIONS	: 37 CFR 1.137(b)

This decision responds to applicant's "PETITION FOR REVIVAL OF AN APPLICATION FOR PATENT ABANDONED UNINTENTIONALLY UNDER 37 CFR 1.137(b)" filed 28 November 2001.

BACKGROUND

On 01 May 2000, applicant filed international application number PCT/IB00/00657, which claimed a priority date of 30 April 1999. A copy of the international application was communicated to the United States Patent and Trademark Office from the International Bureau on 09 November 2000. On 23 November 2000, the applicant filed a Demand for international preliminary examination. Accordingly, the thirty-month period for paying the basic national fee in the United States of America expired at midnight on 30 October 2001.

On 28 November 2001, applicant filed a transmittal letter for entry into the national stage in the United States of America, which was accompanied by, inter alia, the basic national fee, the present "PETITION FOR REVIVAL OF AN APPLICATION FOR PATENT ABANDONED UNINTENTIONALLY UNDER 37 CFR 1.137(b)", and the corresponding petition fee.

DISCUSSION

A petition to revive an application under 37 CFR 1.137(b) must include:

(1) The required reply;
(2) The petition fee;
(3) A statement that the entire delay in filing the required reply from the due date for the reply until the filing of a grantable petition was unintentional.

With regard to item (1), the applicant submitted the basic national fee on 28 November 2001.

With regard to item (2), the applicant submitted the petition fee of $1,280.00 on 28 November 2001.

With regard to item (3), the applicant has provided the required statement.

A review of the application file reveals that, with the filing of the present petition and accompanying papers, a proper response has been submitted and all of the requirements of 37 CFR 1.137(b) for revival have been satisfied and revival is therefore appropriate.

CONCLUSION

For the above reasons, applicants petition under 37 CFR 1.137(b) is **GRANTED**.

Any further correspondence with respect to this matter should be addressed to the Commissioner for Patents, Office of PCT Legal Administration, Box PCT, Washington, D.C. 20231, with the contents of the letter marked to the attention of the PCT Legal Office.

This application is being forwarded to the National Stage Processing Branch of the Office of PCT Operations to continue national stage processing of the application including preparing and mailing a Notification of Missing Requirements (Form PCT/DO/EO/905) requiring an oath or declaration in compliance with 37 CFR 1.497(a)-(b) and the surcharge under 37 CFR 1.492(e) for providing the oath or declaration later than thirty months from the priority date.

Diana L. Oleksa
Special Programs Examiner

Leonard Smith
PCT Legal Examiner

29 JUN 2004

UNITED STATES PATENT AND TRADEMARK OFFICE

#12

COMMISSIONER FOR PATENTS
UNITED STATES PATENT AND TRADEMARK OFFICE
P.O. BOX 1450
ALEXANDRIA, VA 22313-1450
www.uspto.gov

CARELLA, BYRNE, BAIN, GILFILLAN, CECCHI,
STEWART & OLSTEIN
5 BECKER FARM ROAD
ROSELAND, NJ 07068

In re Application of WALDMANN et al	:	
U.S. Application No.: 09/979,948	:	
PCT Application No.: PCT/GB01/04518	:	DECISION
Int. Filing Date: 09 October 2001	:	
Priority Date Claimed: 09 October 2000	:	
Attorney Docket No.: 695458-31	:	
For: THERAPEUTIC ANTIBODIES	:	

This is in response to applicant's "Petition for Revival of an Application for Patent Abandoned Unintentionally Under 37 CFR 1.137(b)" filed 26 March 2004.

BACKGROUND

On 09 October 2001, applicant filed international application PCT/GB01/04518, which claimed priority of an earlier United States application filed 09 October 2000. A copy of the international application was communicated to the USPTO from the International Bureau on 18 April 2002. The thirty-month period for paying the basic national fee in the United States expired on 09 April 2003.

On 06 November 2001, applicant filed national stage papers in the United States Designated/Elected Office (DO/EO/US). The submission was accompanied by, *inter alia*, the basic national fee required by 35 U.S.C. 371(c)(1).

On 12 July 2002, the DO/EO/US mailed a Notification of Missing Requirements Under 35 U.S.C. 371 (Form PCT/DO/EO/905), which indicated that an oath or declaration in compliance with 37 CFR 1.497 and a sequence listing in computer readable form (CRF) must be filed.

On 29 July 2002, applicant filed an executed declaration and CRF.

On 13 September 2002, the DO/EO/US mailed a Notification of Defective Response (Form PCT/DO/EO/916), which indicated that the CRF filed 29 July 2002 was defective.

On 17 October 2002, applicant filed a substitute CRF.

On 06 February 2003, the DO/EO/US mailed a Notification of Defective Response (Form PCT/DO/EO/916), which indicated that the CRF filed 13 September 2002 was defective.

On 04 March 2003, applicant filed a substitute CRF.

On 15 March 2004, the DO/EO/US mailed a Notification of Abandonment (Form PCT/DO/EO/909), which indicated that the application is abandoned for failure to submit a proper response to the Notification of Missing Requirements within the time period set therein.

On 26 March 2004, applicant filed the present petition. The petition states that it is accompanied by a proper response under 35 U.S.C. 371, the petition fee set forth in 37 CFR 1.17(m), and a statement that abandonment of the application was unintentional.

DISCUSSION

Under 37 CFR 1.137(b), a petition requesting that an application be revived on the grounds of unintentional abandonment must be accompanied by: (1) the required reply unless previously filed, (2) the petition fee as set forth in 37 CFR 1.17(m), (3) a statement that the entire delay in filing the required reply from the due date for the reply until the filing of a grantable petition was unintentional, and (4) a terminal disclaimer if the application was filed before 08 June 1995.

With regard to item (1), applicant has provided the required reply under 35 U.S.C. 371.

With regard to item (2), applicant has provided the required petition fee.

With regard to item (3), applicant has provided the required statement.

With regard to item (4), because the international application was filed after 08 June 1995, no terminal disclaimer is required.

CONCLUSION

For the reasons above, the petition under 37 CFR 1.137(b) is GRANTED.

The application has an International Filing Date under 35 U.S.C. 363 of 09 October 2001, and a date under 35 U.S.C. 371(c)(1), (c)(2), and (c)(4) of 26 March 2004.

This application is being forwarded to the United States Designated/Elected Office (DO/EO/US) for further processing in accordance with this decision.

Bryan Tung
PCT Legal Examiner
PCT Legal Office

Telephone: 703-308-6614
Facsimile: 703-308-6459

31 JUL 2002

UNITED STATES PATENT AND TRADEMARK OFFICE

Commissioner for Patents
United States Patent and Trademark Office
Washington, D.C. 20231
www.uspto.gov

Freidrich Kueffner
342 Madison Avenue
Suite 1921
New York, NY 10173

In re Application of
SUDAU, Peter
U.S. Application No.: 09/979,949
PCT No.: PCT/EP00/04075
Int. Filing Date: 06 May 2000
Priority Date: 14 May 1999
Attorney Docket No.: HM-451PCT
For: BENDING DEVICE FOR THE WORKING ROLLS OF A HOT-ROLLING FRAME

NOTICE OF DEFECTIVE RESPONSE

This decision in response to the papers filed on 07 May 2002.

BACKGROUND

On 22 January 2002, the United States Designated/Elected Office (DO/EO/US) mailed a Notification of Missing Requirements under 35 U.S.C. 371 (Form PCT/DO/EO/905) indicating that a signed oath/declaration in compliance with 37 CFR 1.497(a) and (b) and a surcharge fee pursuant to 37 CFR 1.492(e) must be provided. Applicants were given two months to respond with extensions of time available.

On 07 May 2002, applicant submitted an executed declaration signed by three inventors and a petition for a two-month extension and fee.

DISCUSSION

Applicants presented a declaration listing three inventors in the above-captioned application. However, only two persons are recorded as the inventor on the international publication ("WO 00/69579"). Stephan Fischer is not listed as an inventor in the international publication. A check with the International Bureau indicated that no inventors were added after publication on the international application pursuant to PCT Rule *92bis*.

Therefore, the inventive entity listed on the declaration filed on 07 May 2002 is not the same as the inventive entity listed on the international application, PCT/EP00/04075. 37 CFR 1.497(d) applies when the inventorship in a national stage application filed under 35 U.S.C. 371 differs from that set forth in the international application (see 37 CFR 1.48(f)(1)). 37 CFR 1.497(d) states, in part:

(d) If the oath or declaration filed pursuant to 35 U.S.C. 371(c)(4) and this section names an inventive entity different from the inventive entity set forth in the international application, the oath or declaration must be accompanied by:

(1) A statement from each person being added as an inventor . . . that any error in inventorship in the international application occurred without deceptive intention on his or her part;

(2) The processing fee set forth in § 1.17(l); and

(3) If an assignment has been executed by any of the original named inventors, the written consent of the assignees.

Accordingly, applicants must request that Stephan Fischer be added as an inventor pursuant to 37 CFR 1.497(d).

CONCLUSION

For the reasons discussed above, the declaration submitted on 07 May 2002 does not comply with 37 CFR 1.497.

A proper response must be filed within **ONE (1) MONTH** from the mail date of this decision, or any time remaining in the Notification of Missing Requirements. Any request should include a cover letter entitled "Request Under 37 CFR 1.497(d)." Failure to timely respond will result in the **ABANDONMENT** of the above-captioned application. No extension of time under 37 CFR 1.136(a) is available.

Please direct further correspondence with respect to this matter to the Assistant Commissioner for Patents, Box PCT, Washington, D.C. 20231, and address the contents of the letter to the attention of the PCT Legal Office.

Richard Cole
PCT Legal Examiner
PCT Legal Office

James Thomson
Attorney Advisor
PCT Legal Office

Tel.: (703) 308-6457

17 OCT 2002

UNITED STATES PATENT AND TRADEMARK OFFICE

COMMISSIONER FOR PATENTS
UNITED STATES PATENT AND TRADEMARK OFFICE
WASHINGTON, D.C. 20231
www.uspto.gov

Freidrich Kueffner
342 Madison Avenue
Suite 1921
New York, NY 10173

In re Application of
SUDAU, Peter *et al*
U.S. Application No.: 09/979,949
PCT No.: PCT/EP00/04075
Int. Filing Date: 06 May 2000
Priority Date: 14 May 1999
Attorney Docket No.: HM-451PCT
For: BENDING DEVICE FOR THE WORKING ROLLS OF A HOT-ROLLING FRAME

DECISION ON REQUEST UNDER 37 CFR 1.497(d)

This decision in response to applicants' "Request Under 37 C.F.R. 1.497(d)" filed on 03 September 2002.

BACKGROUND

On 31 July 2002, a notification informing applicants that the declaration filed 07 May 2002 was defective because the inventive entity listed was different from the inventive entity listed on the international application.

On 03 September 2002, applicants submitted the instant request which was accompanied by, *inter alia*, a two-month extension request and fee and a copy of a PCT Request in the German language.

DISCUSSION

In the instant request, applicants claim that "all three inventors which were listed on the Declaration submitted to the U.S. Patent and Trademark Office were also named in the international application." Pet. at ¶ 1. Later, applicants claim that "[t]he remark in the PCT Request next to the name of Stephan Fischer translates into English as follows: "The inventor does not wish to be named to the outside." Id. at ¶ 3.

Applicants included a copy of a Request in the German language without an accompanying English translation. It is noted that documents in a language other than English without an accompanying English translation will not be be considered in the USPTO.

Nevertheless, a check with the examiner at the International Bureau who is

US 099799490AP1

Creation date: 02-24-2004
Indexing Officer: FNIGATU - FITSUM NIGATU
Team: OIPEBackFileIndexing
Dossier: 09979949

Legal Date: 09-03-2002

No.	Doccode	Number of pages
1	LET.	2

Total number of pages: 2

Remarks:

Order of re-scan issued on .....

SPE RESPONSE FOR CERTIFICATE OF CORRECTION

Paper No.: _____

DATE : October 4, 2005

TO SPE OF : ART UNIT 1649

SUBJECT : Request for Certificate of Correction on Patent No.: 6,913,745

A response is requested with respect to the accompanying request for a certificate of correction.

Please complete this form and return with file, within **7** days to:
Palm location **7580, Certificates of Correction Branch – South Tower – 9A22**
If response is for an IFW, **return to employee (named below) via PUBSCofC Team in MADRAS.**
With respect to the change(s) requested, correcting Office and/or Applicant's errors, should the patent read as shown in the certificate of correction (COCIN)? No new matter should be introduced, nor should the scope or meaning of the claims be changed.

Magdalene Talley

Thank You For Your Assistance

Certificates of Correction Branch
Tel. No. 703-308-9309 ext. 116

The request for issuing the above-identified correction(s) is hereby:
Note your decision on the appropriate box.

- ☑ **Approved** — **All** changes apply.
- ☐ **Approved in Part** — Specify below which changes **do not** apply.
- ☐ **Denied** — State the reasons for denial below.

Comments:

Brenda Brumbaugh — **SPE**

1647 — **Art Unit**

18 JUN 2002

UNITED STATES PATENT AND TRADEMARK OFFICE

COMMISSIONER FOR PATENTS
UNITED STATES PATENT AND TRADEMARK OFFICE
WASHINGTON, D.C. 20231
www.uspto.gov

YOUNG & THOMPSON
745 South 23rd Street
2nd Floor
Arlington, VA 22202

In re Application of: FORTIN, Frederic U.S. Application No.: 09/979,974 PCT No.: PCT/FR00/01427 International Filing Date: 26 May 2000 Priority Date: 01 June 1999 Attorney's Docket No.: JLT/SB/FORTIN.PCT/US For: DISTRACTION DEVICE FOR THE BONES OF CHILDREN	DECISION ON PETITION TO REVIVE ABANDONED APPLICATION UNDER 37 CFR 1.137(b)

The petition to revive under 37 CFR 1.137(b) filed 29 November 2001 in the above-captioned application is hereby **GRANTED** as follows:

Applicants' statement that "the entire delay in filing the required reply from the due date for the reply until the filing of a grantable petition pursuant to 37 CFR 1.137(b) was unintentional" meets the requirements of 37 CFR 1.137(b)(3). Applicants have now submitted the basic national fee and the requirements of 37 CFR 1.137(b) have been satisfied. Therefore, the request to revive the application is granted as to the national stage in the United States of America.

The 29 November 2001 submission included an executed declaration in compliance with 37 CFR 1.497; however, applicant has not yet paid the $130 surcharge for filing the declaration later than twenty months after the priority date. In addition, applicant has not yet submitted the required translation of the international application into English.

This application is being returned to the National Stage Processing Division of the Office of PCT Operations for further processing in accordance with this decision, including the mailing of a Notification Of Missing Requirements requiring submission of a translation of the international application into English and the surcharge for filing the declaration later than twenty months after the priority date.

Richard M. Ross
PCT Petitions Attorney
PCT Legal Office
Telephone: (703) 308-6155
Facsimile: (703) 308-6459

26 JUN 2002

UNITED STATES PATENT AND TRADEMARK OFFICE

Commissioner for Patents
United States Patent and Trademark Office
Washington, D.C. 20231
www.uspto.gov

Connolly Bove Lodge & Hutz LLP
1990 M Street, N.W., Suite 800
Washington, DC 20036-3425

In re Application of	:	
Jan Hall et al.	:	
Application No.: 09/980,011	:	DECISION ON
PCT No.: PCT/SE00/01027	:	
Int. Filing Date: 31 May 1999	:	PETITION
Priority Date: 23 May 2000	:	
Attorney's Docket No.: 21547/0286	:	UNDER 37 CFR 1.181
For: IMPLANT, METHOD FOR PRODUCING	:	
THE IMPLANT, AND USE OF THE IMPLANT	:	

This decision is in response to the "Reply To Notification Of Abandonment" filed on 07 March 2002, which is being treated as a petition under 37 CFR 1.181, requesting the withdrawal of the holding of abandonment mailed on 07 February 2002 because the full U.S. Basic National Fee was timely authorized to be charged to petitioner's Deposit Account.

BACKGROUND

On 23 May 2000, this international application was filed, claiming an earliest priority date of 31 May 1999.

On 01 December 2000, a Demand electing the United States was filed in this international application. Accordingly, the deadline for paying the basic national fee in the United States under 35 U.S.C. 371 and 37 CFR 1.495 was 31 November 2001.

On 30 November 2001, applicants filed a transmittal letter for entry into the national stage in the United States which was accompanied by, inter alia, the allege requisite basic national fee as required by 35 U.S.C. 371(c)(1), and a copy of the international application. No oath or declaration was filed at that time.

On 07 February 2002, the DO/EO/US mailed a "NOTIFICATION OF ABANDONMENT" (Form PCT/DO/EO/909) which indicated that applicant had failed to provide the full U.S. Basic National Fee by 30 months.

In response to the "NOTIFICATION OF ABANDONMENT" mailed on 07 February 2002, petitioner submitted a "Reply to Notification of Abandonment" on 07 March 2002 indicating that the USPTO was authorized to charge Deposit Account No. 22-0185 in the amount

of $1,1840.00 to cover the fees on 30 November 2001, and also the Office was authorized to charge any additional fees which may be required. According, the full U.S. Basic National Fee was authorized to be charged to petitioner's Deposit Account on 30 November 2001.

DISCUSSION

In view of the above, the applicant's payment of the full Basic National fee would have been considered timely if there would have been sufficient funds to cover the charges on 30 November 2001.

The record of the filed application shows that the USPTO made attempts on 06 December 2001 and 05 February 2002, respectively, to charge petitioner's Deposit Account no. 22-0185 the required fees but the account had insufficient funds. Accordingly, petitioner did not pay the basic national fee in the United States under 35 U.S.C. 371 and 37 CFR 1.495 by the 30 month deadline of 31 November 2001.

Consequently, the aforementioned application was properly abandoned for failure to pay the full U.S. Basic National Fee by 30 months.

Applicant may wish to consider the filing of a petition to revive the application under 37 CFR 1.137(b).

CONCLUSION

For reasons above, the petition under 37 CFR 1.181 is **DISMISSED**, without prejudice.

The application remains **ABANDONED**.

If reconsideration of the merits of the petition under 37 CFR 1.181 is desired or if applicant decides to file a petition to revive under 37 CFR 1.137(b), applicant must file such within **Two (2) MONTHS** from the mail date of this Decision.

Any further correspondence with respect to this matter should be addressed to the Assistant Commissioner for Patents, Box PCT, Washington, D.C. 20231, with the contents of the letter marked to the attention of the PCT Legal Office.

Rafael Bacares
PCT Legal Examiner
Work (703) 308-2260
Fax (703) 308-6459

Richard Cole
PCT Legal Examiner
PCT Legal Affairs

'07 OCT 03

#6

UNITED STATES PATENT and TRADEMARK OFFICE

COMMISSIONER FOR PATENTS
UNITED STATES PATENT AND TRADEMARK OFFICE
P.O BOX 1450
ALEXANDRIA, VA 22313-1450
www.uspto.gov

Connolly Bove Lodge & Hutz LLP
1990 M Street, N.W., Suite 800
Washington, DC 20036-3425

In re Application of	:	
Jan Hall et al.	:	
Application No.: 09/980,011	:	DECISION ON
PCT No.: PCT/SE00/01027	:	
Int. Filing Date: 31 May 1999	:	PETITION
Priority Date: 23 May 2000	:	
Attorney's Docket No.: 21547/0286	:	UNDER 37 CFR 1.181
For: IMPLANT, METHOD FOR PRODUCING	:	
THE IMPLANT, AND USE OF THE IMPLANT	:	

This decision is in response to the "REQUEST FOR RECONSIDERATION OF DECISION UNDER 37 C.F.R. 1.181" requesting the removal of the holding of abandonment because the full U.S. Basic National Fee was timely authorized to be charged to petitioner's Deposit Account.

BACKGROUND

In a decision from this Office on 26 June 2002 the petition filed on 07 March 2002 was dismissed. The decision indicated that the record of the filed application shows that the USPTO made attempts on 06 December 2001 and 05 February 2002 to charge petitioner's Deposit Account no.: 22-0185 but the account had insufficient funds.

On 26 August 2002, applicants filed a renewed petition under 37 CFR 1.181.

DISCUSSION

A review of the printouts for the Deposit Account No.: 22-0185 for the application and time in question reveal that there were insufficient funds at the time the USPTO charged the above application the U.S. Basic National Fee on December 7, 2001.

The record shows that applications 09/980,012, 09/980,005 and 09/980,296 were charged to the Deposit Account No.: 22-0185 on 06 December 2001 at 2:52 pm, 2:54 pm, and 2:54 pm respectively. This occurred at the end of business day on the 6th of December for the financing section of PCT, therefore the charges are shown on the printout for the following business day on 07 December 2001. The printouts show that by the end of the third charge for the above applications the Deposit Account No.: 22-0185 amount had been reduced to $922.65 and was not replenished until the following day, 07 December 2001, at 10:00 am. Accordingly, when the

above application fee of $1,184.00 was charged to Deposit Account No.: 220185 on 06 December 2001 there was insufficient fees since there was only 922.65 at that time and the Deposit Account was not replenished until the next day.

Consequently, the aforementioned application was properly abandoned for failure to pay the full U.S. Basic National Fee by 30 months.
09/980,012, 09/980,005 and 09/980,296

Applicant may wish to consider the filing of a petition to revive the application under 37 CFR 1.137(b).

CONCLUSION

For reasons above, the petition under 37 CFR 1.181 is **DISMISSED**, without prejudice.

The application remains **ABANDONED**.

If reconsideration of the merits of the petition under 37 CFR 1.181 is desired or if applicant decides to file a petition to revive under 37 CFR 1.137(b), applicant must file such within **Two (2) MONTHS** from the mail date of this Decision.

Any further correspondence with respect to this matter should be addressed to the Mail Stop PCT, Commissioner for Patents, Office of PCT Legal Administration, P.O. Box 1450, Alexandria, Virginia 22313-1450, with the contents of the letter marked to the attention of the office of PCT Legal Administration.

Rafael Bacares
PCT Legal Examiner
PCT Legal Office
Telephone: (703) 308-6312
Facsimile: (703) 308-6459

Leonard Smith
PCT Legal Examiner
PCT Legal Office

Enclosed:

Printouts for applications: 09/980,012, 09/980,005, 09/980,296, and USPTO attempt charge to 09/980,011

UNITED STATES PATENT and TRADEMARK OFFICE

COMMISSIONER FOR PATENTS
UNITED STATES PATENT AND TRADEMARK OFFICE
P.O BOX 1450
ALEXANDRIA, VA 22313-1450
www.uspto.gov

07 JAN 2004

Connolly Bove Lodge & Hutz LLP
1990 M Street, N.W., Suite 800
Washington, DC 20036-3425

In re Application of	:	
Jan Hall et al.	:	
Application No.: 09/980,011	:	DECISION ON
PCT No.: PCT/SE00/01027	:	
Int. Filing Date: 31 May 1999	:	PETITION
Priority Date: 23 May 2000	:	
Attorney's Docket No.: 21547/0286	:	UNDER 37 CFR 1.137(b)
For: IMPLANT, METHOD FOR PRODUCING	:	
THE IMPLANT, AND USE OF THE IMPLANT	:	

This decision is in response to applicants' "Petition For Revival Of An International Application For Patent Designating The U.S. Abandoned Unintentionally Under 37 CFR 1.137(b)," filed on 22 October 2003.

BACKGROUND

In a decision from this Office on 07 October 2003, the renewed petition filed on 26 August 2002 was dismissed. The decision stated that the application was properly abandoned for failure to pay the full U.S. Basic National Fee by 30 months.

On 22 October 2003, applicants filed the instant petition under 37 CFR 1.137(b).

DISCUSSION

A grantable petition to revive an abandoned application under 37 CFR 1.137(b) must be accompanied by (1) the required reply, unless previously filed. In a nonprovisional application abandoned for failure to prosecute, the required reply may be met by the filing of a continuing application; (2) the petition fee as set forth in § 1.17(m); and (3) a statement that the entire delay in filing the required reply from the due date for the reply until the filing of a grantable petition pursuant to this paragraph was unintentional. The Commissioner may require additional information where there is a question whether the delay was unintentional; and (4) any terminal disclaimer (and fee as set forth in § 1.20 (d)) required pursuant to paragraph (c) of this section.

Petitioner has provided: (1) the proper reply by authorizing on 07 March 2002 to recharge the deposit account and having sufficient funds in the deposit account on 15 May 2002 when the Office charged it for the Basic National Fee, (2) the petition fee set forth in §1.17(m) and (3) the proper statement under 137(b)(3). In this application, no terminal disclaimer is required.

Accordingly, the petition is deemed to satisfy requirements (1), (2), (3), and (4) under 37 CFR 1.137(b).

DECISION

The petition under 37 CFR 1.137(b) is **GRANTED**.

This application is being returned to the United States Designated/Elected Office (DO/EO/US) for continued processing. The 35 USC 371 date of this application is **07 March 2002**.

Rafael Bacares
PCT Legal Examiner
PCT Legal Office

Telephone: (703) 308-6312
Facsimile: (703) 308-6459

FEB 2 5 2002

UNITED STATES PATENT AND TRADEMARK OFFICE

COMMISSIONER FOR PATENTS
UNITED STATES PATENT AND TRADEMARK OFFICE
WASHINGTON, D.C. 20231
www.uspto.gov

David R. Metzger
SONNENSCHEIN NATH & ROSENTHAL
P.O. Box 061080
Wacker Drive Station, Sears Tower
Chicago, Ill 60606-1080

In re Application of: HONDA, Noriyuki, et al. U.S. Application No.: 09/980,024 PCT No.: PCT/JP01/02356 International Filing Date: 23 March 2001 Priority Date: 23 March 2000 Attorney's Docket No.: 9792486-0111 For: ELECTRICAL CONNECTION MATERIAL AND ELECTRICAL CONNECTION METHOD	DECISION ON PETITION TO REVIVE ABANDONED APPLICATION UNDER 37 CFR 1.137(b)

The petition to revive under 37 CFR 1.137(b) filed 28 November 2001 in the above-captioned application is hereby **GRANTED** as follows:

Applicants' statement that the "the entire delay in filing the required reply from the due date for the reply until the filing of a grantable petition pursuant to 37 CFR 1.137(b) was unintentional" meets the requirements of 37 CFR 1.137(b)(3).

Applicants have now submitted the basic national fee and the requirements of 37 CFR 1.137(b) have been satisfied. Therefore, the request to revive the application is granted as to the national stage in the United States of America.

This application is being returned to the National Stage Processing Division of the Office of PCT Operations for further processing in accordance with this decision, including the mailing of a Notification Of Missing Requirements (Form PCT/DO/EO/905) requiring submission of an executed declaration in compliance with 37 CFR 1.497.

Richard M. Ross
PCT Petitions Attorney
PCT Legal Office
Telephone: (703) 308-6155
Facsimile: (703) 308-6459

UNITED STATES PATENT AND TRADEMARK OFFICE

Commissioner for Patents
United States Patent and Trademark Office
P.O. Box 1450
Alexandria, VA 22313-1450
www.uspto.gov

SONNENSCHEIN NATH & ROSENTHAL
SEARS TOWER
WACKER DRIVE STATION
P.O. BOX 061080
CHICAGO IL 60606-1080

COPY MAILED

JUL 2 2 2005

OFFICE OF PETITIONS

In re Application of	:	
Noriyuki Honda et al	:	
Application No. 09/980,024	:	ON PETITION
Filed: May 28, 2002	:	
Attorney Docket No. 9792486-0111	:	

This is a decision on the petition, filed July 20, 2005, under 37 CFR 1.313(c)(2) to withdraw the above-identified application from issue after payment of the issue fee.

The petition is **GRANTED**.

The above-identified application is withdrawn from issue for consideration of a submission under 37 CFR 1.114 (request for continued examination). See 37 CFR 1.313(c)(2).

Petitioner is advised that the issue fee paid on May 3, 2005 in the above-identified application cannot be refunded. If, however, the above-identified application is again allowed, petitioner may request that it be applied towards the issue fee required by the new Notice of Allowance.[1]

Telephone inquiries should be directed to the undersigned at (571) 272-3208.

The examiner of Technology Center AU 2813 will consider the request for continued examination under 37 CFR 1.114.

Karen Creasy

Karen Creasy
Petitions Examiner
Office of Petitions
Office of the Deputy Commissioner
for Patent Examination Policy

---

[1] The request to apply the issue fee to the new Notice may be satisfied by completing and returning the new Issue Fee Transmittal Form PTOL-85(b), which includes the following language thereon: "Commissioner for Patents is requested to apply the Issue Fee and Publication Fee (if any) or re-apply any previously paid issue fee to the application identified above." Petitioner is advised that, whether a fee is indicated as being due or not, the Issue Fee Transmittal Form **must** be completed and timely submitted to avoid abandonment. Note the language in bold text on the first page of the Notice of Allowance and Fee(s) Due (PTOL-85).

UNITED STATES PATENT AND TRADEMARK OFFICE

Technology Center 1700.

Mailed: JAN 3 1 2005

rvk
Paper No. _____

In re application of:
Werner Lautenschläger et al
Serial No.: 09/980,026
Filed: March 29, 2002
For: DEVICE FOR IMPLEMENTING CHEMICAL REACTIONS AND PROCESSES IN HIGH FREQUENCY FIELDS

DECISION ON PETITION

This is a response to the PETITION TO WITHDRAW HOLDING OF ABANDONMENT UNDER 37 C.F.R. §1.181(a) and MPEP § 711.03(c)(II), filed June 28, 2004. The petition requests that the abandonment, as set forth in the Notice of Abandonment of June 16, 2004, for failure to timely file a proper response to the Office letter dated October 02, 2003 be withdrawn. The petitioner asserts that applicants timely filed a proper response on November 13, 2003.

DECISION

The instant request is accepted as a timely petition under 37 C.F.R. 1.181 (no fee).

A review of the petitioner's evidence provided with the instant petition indicates that the request has merit. The evidence presented is sufficient to establish that the applicants did file the proper response to the Office letter of October 02, 2003 in a timely manner. The evidence provided includes: 1) copies of the Response to the Office letter of October 02, 2003 with an executed Certificate of Mailing on November 13, 2003 (Exhibit B) ; and 2) a copy of the returned stamped postcard confirming receipt of the Response by the USPTO dated November 17, 2003 (Exhibit C).

Therefore, the abandonment is hereby withdrawn, and the application is returned to

pending status. The application will be forwarded to the Technical Support Staff for entering of the Response dated November 17, 2003 and then forwarded to the examiner for prompt consideration.

The Petition is **GRANTED.**

Jacqueline Stone, Director
Technology Center 1700
Chemical and Materials Engineering

ANTHONY G. SITKO
6300 SEARS TOWER
233 SOUTH WACKER DRIVE
CHICAGO, IL 60606-6402

SPE RESPONSE FOR CERTIFICATE OF CORRECTION

Paper No.: _____

DATE : Sep. 13, 2006

TO SPE OF : ART UNIT 2618 **(S.P.E. Edward Urban)**

SUBJECT : Request for Certificate of Correction for Appl. No.: 09/980027 Patent No.: 7079823

Please respond to this request for a certificate of correction within 7 days.

Please review the requested changes/corrections as shown in the **COCIN** document(s) in the IFW application image. No new matter should be introduced, nor should the scope or meaning of the claims be changed.

Please complete the response (see below) and forward the completed response to scanning using document code **COCX**.

STACY POWELL

Certificates of Correction Branch

703-308-9390 ext. 120

Thank You For Your Assistance

The request for issuing the above-identified correction(s) is hereby:

Note your decision on the appropriate box.

- ☒ **Approved** — **All** changes apply.
- ☐ **Approved in Part** — **Specify below** which changes **do not** apply.
- ☐ **Denied** — State the reasons for denial below.

Comments: _____

EDWARD F. URBAN
SUPERVISORY PATENT EXAMINER
TECHNOLOGY CENTER 2600

2618
Art Unit

SPE

UNITED STATES PATENT AND TRADEMARK OFFICE

COMMISSIONER FOR PATENT
UNITED STATES PATENT AND TRADEMARK OFFIC
WASHINGTON, D C 20231
www.uspto.go

Paper No. 10

SARA D. VINAROV
MICHAEL BEST & FRIEDRICH LLP
ONE SOUTH PINCKNEY STREET
P.O. BOX 1806
MADISON, WI 53701-1806

COPY MAILED

SEP 3 0 2002

OFFICE OF PETITIONS

In re Application of :
Vincent L. Chiang et al :
Application No. 09/980,043 :
Filed: April 5, 2002 :
Attorney Docket No. 066040-9675 :

NOTICE

This is a notice regarding your request for acceptance of a fee deficiency submission under 37 CFR 1.28. On September 1, 1998, the Court of Appeals for the Federal Circuit held that 37 CFR 1.28(c) is the sole provision governing the time for correction of the erroneous payment of the issue fee as a small entity. **See DH Technology v. Synergystex International, Inc. 154 F.3d 1333, 47 USPQ2d 1865 (Fed. Cir. Sept. 1, 1998).**

The Office no longer investigates or rejects original or reissue applications under 37 CFR 1.56. **1098 Off. Gaz. Pat. Office 502 (January 3, 1989)**. Therefore, nothing in this Notice is intended to imply that an investigation was done.

Your fee deficiency submission under 37 CFR 1.28 is hereby **ACCEPTED**.

Inquiries related to this communication should be directed to the Office of Petitions Staff at (703) 305-9285.

This file is being forwarded to Technology Center 1600.

Irvin Dinglé
Petitions Examiner
Office of Petitions
Office of the Deputy Commissioner
for Patent Examination Policy

17 MAR 2003

UNITED STATES PATENT AND TRADEMARK OFFICE

#8

COMMISSIONER FOR PATENT
UNITED STATES PATENT AND TRADEMARK OFFIC
WASHINGTON, D.C. 20231
www.uspto.go

Diana Hamlet-Cox
Incyte Genomics Inc.
3160 Porter Drive
Palo Alto, CA 94304

In re Application of	:	DECISION ON
POLICKY et al.		:
Application No.: 09/980,049	:	PETITION UNDER
PCT No.: PCT/US01/10436	:	
Int. Filing Date: 29 March 2001	:	37 CFR 1.182
Priority Date: 29 March 2000	:	
For: G-PROTEIN COUPLED RECEPTORS	:	

This is a decision on applicants' communication "Missing Requirements Under 35 U.S.C. 371" treated as a petition under 37 CFR 1.182 and response to Notification of Missing Requirements, filed with the United States Patent and Trademark Office (USPTO) on 08 July 2002. Applicants request that the application reflect joint inventor Chandra Patterson family name change from Chandra Patterson to Chandra Arvizu. The $130 petition fee was authorized to be paid from applicants' deposit account.

On 28 November 2001, within 30 months from priority date of the international application, applicants filed a transmittal letter for entry into the national stage in the United States, which was accompanied by, *inter alia*,: the requisite basic national fee. The international application indicated that the inventors/applicants for the United States of America included Chandra Patterson as a named joint inventor.

On 01 February 2002, a Notification of Missing Requirements (Form PCT/DO/EO/905) was mailed to applicants indicating that applicants must furnish an oath or declaration in compliance with 37 CFR 1.497(a) and (b), and executed in accord with either 37 CFR 1.66 or 1.68, and that the $130 surcharge for filing the oath or declaration after the thirty month period was required.

On 08 July 2002, applicants filed the instant communication in response to Notification of Missing Requirements. The paper indicated that Chandra Patterson married and changed her family name to Chandra Arvizu subsequent to the filing of the international application. However, applicants did not submit an affidavit signed by Chandra Patterson indicating the reason for the name change.

DISCUSSION

As explained in MPEP 605.04(c), applicants must provide a signed affidavit setting forth both names and the procedure whereby the change of name was effected, or a certified copy of the court order. Here, applicant only submitted the statement of the attorney regarding the change of name of Chandra Patterson. Applicant did not submit a signed affidavit setting forth the procedure whereby the change of name was effected and identifying both names, Chandra Patterson and Chandra Arvizu. In lieu of this affidavit, applicant may file a certified copy of the court order. Thus, the evidence is insufficient to conclude that Chandra Patterson changed her name by marriage to Chandra Arvizu.

CONCLUSION

The petition under 37 CFR 1.182 to change the inventor's name from Chandra Patterson to Chandra Arvizu is **DISMISSED WITHOUT PREJUDICE**.

Any reconsideration on the merits of this petition must be filed within TWO (2) MONTHS from the mail date of this decision. Any reconsideration request should include a cover letter entitled " Renewed Petition Under 37 CFR 1.182."

Any further correspondence with respect to this matter should be addressed to the Assistant Commissioner for Patents, Box PCT, Washington, D.C. 20231, with the contents of the letter marked to the attention of the PCT Legal Office.

Cynthia M. Kratz

Cynthia M. Kratz
Attorney Advisor
PCT Legal Office

Telephone: 703-306-5467

30 APR 2004

#10

UNITED STATES PATENT AND TRADEMARK OFFICE

COMMISSIONER FOR PATENTS
UNITED STATES PATENT AND TRADEMARK OFFICE
WASHINGTON, D.C. 20231
www.uspto.gov

Diana Hamlet-Cox
Incyte Genomics Inc.
3160 Porter Drive
Palo Alto, CA 94304

In re Application of	: DECISION ON
POLICKY et al.	:
Application No.: 09/980,049	: PETITION UNDER
PCT No.: PCT/US01/10436	:
Int. Filing Date: 29 March 2001	: 37 CFR 1.182
Priority Date: 29 March 2000	:
For: G-PROTEIN COUPLED RECEPTORS	:

This is a decision on applicants' "Petition for Name Change of Inventor under 37 CFR 1.182", filed with the United States Patent and Trademark Office (USPTO) on 19 May 2003. Applicants request that the application reflect joint inventor Chandra Patterson family name change from Chandra Patterson to Chandra S. Arvizu. The $130 petition fee was authorized to be paid from applicants' deposit account.

On 08 July 2002, applicants filed a Response to Notification of Missing Requirements, indicating that Chandra Patterson married and changed her family name to Chandra Arvizu subsequent to the filing of the international application. .

On 17 March 2003, a decision on the submission indicating that an affidavit signed by Chandra Patterson indicating the reason for the name change must be submitted.

As explained in MPEP 605.04(c), applicants must provide a signed affidavit setting forth both names and the procedure whereby the change of name was effected, or a certified copy of the court order. Here, applicant submitted the statement of Chandra Patterson regarding her respective change of name. Applicant submitted her signed affidavit setting forth the procedure whereby the change of name was effected and identifying both names of applicant, Chandra Patterson and Chandra S. Arvizu. Thus, the evidence is sufficient to conclude that Chandra Patterson changed her name by marriage to Chandra S. Arvizu.

CONCLUSION

The petition under 37 CFR 1.182 to change the inventor's name Chandra Patterson to Chandra S. Arvizu is **GRANTED.**

The declaration submitted on 21 November 2001 is acceptable as filed. The application will be forwarded to the United States Designated/Elected Office for further processing. The 35 U.S.C. 371 date is **21 November 2001**.

Cynthia M. Kratz
Attorney Advisor
PCT Legal Office

Telephone: 703-306-5467

UNITED STATES PATENT AND TRADEMARK OFFICE

COMMISSIONER FOR PATENTS
UNITED STATES PATENT AND TRADEMARK OFFICE
P.O. BOX 1450
ALEXANDRIA, VA 22313-1450
www.uspto.go

MAILED

SEP 29 2006

Technology Center 2100

William S. Frommer
Frommer, Lawrence & Haug
745 Fifth Avenue – 10th Floor
New York, NY 10151

In re Application of: Kori, et al.
Application No. 09/980,057
Filed: November 29, 2001
For: TRANSMITTER, SIGNAL TRANSMITTING METHOD, DATA DISTRIBUTING SYSTEM AND ITS METHOD, DATA RECEIVER, DATA PROVIDING DEVICE AND ITS METHOD AND DATA TRANSMITTER

DECISION GRANTING PETITION TO RESET PERIOD FOR REPLY

This is a decision on the petition filed on 18 August 2006, requesting that the shortened statutory period for reply set forth in the Office communication mailed on 21 March 2006 be reset and the action remailed.

The petition is **GRANTED**.

Petitioner provided a statement that the Office communication in question was not received at the correspondence address of record. In addition, Petitioner provided: a statement that the file (jacket) and docket records were searched; a copy of the docket records at the address of record; as well as reference to the docket record.

Accordingly, the Petition is **GRANTED**.

The application is being forwarded to the Supervisory Legal Instruments Examiner with instructions to **REDATE** and **REMAIL** the final Office action, originally mailed 21 March 2006.

Any inquiry concerning this decision should be directed to Brian Johnson whose telephone is (571) 272-3595.

Brian L. Johnson
Special Programs Examiner
Technology Center 2100
Computer Architecture, Software, and Information Security

UNITED STATES PATENT AND TRADEMARK OFFICE

Commissioner for Patents
United States Patent and Trademark Office
P.O. Box 1450
Alexandria, VA 22313-1450
www.uspto.gov

STIENNON & STIENNON
612 W. MAIN STREET, SUITE 201
P O BOX 1667
MADISON, WI 53701-1667

COPY MAILED

AUG 3 1 2006

OFFICE OF PETITIONS

In re Patent No. 6,790,316	:	
Issue Date: September 14, 2004	:	
Application No. 09/980,061	:	ON PETITION
Filed: March 5, 2002	:	
Attorney Docket No. FORSAL-30	:	

This is a decision on the request, filed October 20, 2005, under 37 CFR 3.81(b) to correct the name of the assignee on the front page of the above-identified patent by way of a Certificate of Correction.

The petition is **GRANTED**.

The patent file is being forwarded to the Certificates of Correction Branch for issuance of the requested Certificate of Correction.

Telephone inquiries concerning this decision may be directed to the undersigned at (571) 272-3218. Inquiries regarding the issuance of a certificate of correction should be directed to the Certificate of Correction Branch at (571) 272-4200.

Frances Hicks
Frances Hicks
Petitions Examiner
Office of Petitions

UNITED STATES PATENT AND TRADEMARK OFFICE

COMMISSIONER FOR PATENTS
UNITED STATES PATENT AND TRADEMARK OFFICE
P.O. BOX 1450
ALEXANDRIA, VA 22313-1450
www.uspto.gov

CLARK & ELBING LLP
101 FEDERAL STREET
BOSTON, MA 02110

COPY MAILED

MAY 18 2005

OFFICE OF PETITIONS

In re Application :
Jochmus, et al. :
Application No. 09/980,064 : PATENT TERM ADJUSTMENT
Filed: March 27, 2002 :
Dkt. No.: 50125/037001 :

This is a decision on the "APPLICATION FOR PATENT TERM ADJUSTMENT UNDER 37 C.F.R. § 1.705," filed November 1, 2004. This request is being treated under 37 CFR 1.704(b) as an application for patent term adjustment.

The application for patent term adjustment ("PTA") under 37 CFR 1.705(b) is **GRANTED**.

The Office will adjust the PAIR screen to reflect that the Patent Term Adjustment (PTA) determination at the time of mailing of the Notice of Allowance and Issue Fee Due reflects an adjustment of 183 days. A copy of the updated PAIR screen showing the correct determination is enclosed.

A review of the application history reveals the Office errantly entered March 11, 2004 as the date a reply to the restriction required was filed rather than May 8, 2003, the date the response initially received as indicated on the copy of the stamped and dated postcard evidencing receipt of the response by the Office.

Thus, an adjustment of 185 days under 37 CFR 1.702(a)(2) of 185 days can be attributed to the Office. In accordance with 37 CFR 1.703(a)(2), the adjustment began September 9, 2003, the day after the date that is four months after the date a reply under § 1.111 was filed, and ended March 12, 2004, the date of mailing of non-final Office action.

The adjustment of 185 days, however, is reduced two days under 37 CFR 1.704(b) for applicants failure to engage in reasonable efforts to conclude prosecution. The reduction began July 13, 2004, the day after the date that is three months after the date

of mailing of non-final Office action, and ended June 14, 2004, the date of receipt of applicants' response.

In view thereof, at the time of Notice of Allowance the application is entitled to a patent term adjustment of 183 days as argued by applicants.

Applicants submitted $400.00 in connection with this matter, however, the fee for an application for patent term adjustment is currently $200.00. Applicant may request a refund in writing of the excess $200.00 by writing to the Finance Office, Refund Section. A copy of this decision should accompany any request for refund.

This application is being forwarded to the Office of Patent Publication for processing into a patent.

Telephone inquiries specific to this matter should be directed to Petitions Attorney Alesia M. Brown at (571) 272-3205.

Karin Ferriter
Senior Legal Advisor
Office of Patent Legal Administration
Office of Deputy Commissioner
for Patent Examination Policy

Enclosure: Copy of Adjustment PAIR Calculation

UNITED STATES PATENT AND TRADEMARK OFFICE

COMMISSIONER FOR PATENTS
UNITED STATES PATENT AND TRADEMARK OFFICE
P.O. BOX 1450
ALEXANDRIA, VA 22313-1450
www.uspto.gov

CLARK & ELBING LLP
101 FEDERAL STREET
BOSTON, MA 02110

COPY MAILED

MAR 1 3 2006

OFFICE OF PETITIONS

In re Patent No. 6,911,207 :
Issued: June 28, 2005 :
Application No. 09/980,064 : PATENT TERM ADJUSTMENT
Filed: March 27, 2002 :
Atty. Dkt. No.: 50125/037001 :

This is a decision on the "APPLICATION FOR PATENT TERM ADJUSTMENT UNDER 37 C.F.R. 1.705," filed August 10, 2005. This matter is being treated under 37 CFR 1.705(d) as a timely filed application for patent term adjustment.

The application for patent term adjustment ("PTA") under 37 C.F.R. § 1.705(d) is **GRANTED TO THE EXTENT INDICATED HEREIN**.

The above-identified application matured into U.S. Patent No. 6,911,207 on June 28, 2005. The instant request for reconsideration was timely filed August 10, 2005 in accordance with 37 C.F.R. § 1.705(d). The patent issued with a PTA of 180 days. Applicants argue that the patent is entitled to an adjustment of 183 days.

At the time of issuance, the patent was entitled to an overall adjustment of 304 days. An adjustment of 185 days under 37 CFR 1.702(a)(2) can be attributed to the Office. The adjustment began September 9, 2003, the day after the date that is four months after the date a reply under § 1.111 was filed, and ended March 12, 2004, the date of mailing of non-final Office action. *See* 37 CFR 1.703(a)(2).

A further adjustment of 119 days under 37 CFR 1.702(a)(4) can be attributed to the Office for failure to issue the patent within four months of the date of receipt of the issue fee payment. The adjustment began March 2, 2005, the day after the date that is four months after the date that the issue fee payment was received, and ended June 28, 2005, the date the patent issued. *See* 37 CFR 1.703(a)(6).

The adjustment of 304 days, however, is reduced two days under 37 CFR 1.704(b) for applicants failure to engage in reasonable efforts to conclude prosecution. The reduction began July 13,

2004, the day after the date that is three months after the date of mailing of non-final Office action, and ended June 14, 2004, the date of receipt of applicants' response.

The adjustment of 304 days is further reduced two days under 37 CFR 1.704(b) for applications failure to engage in reasonable efforts to conclude prosecution. The reduction began October 31, 2004, the day after the date that is three months after the date the Notice of Allowance was mailed, and ended November 1, 2004, the date the issue fee payment was received.

A review of the PALM calculations for this application reveals that the determination of PTA was reduced by 120 days for applicant's submission of drawings after the mailing of the notice of allowance. *See* 37 CFR 1.704(c)(10). However, a review of the application record supports a conclusion that no drawings (or any other paper, aside from the instant petition) were filed in this application after the mailing of the notice of allowance.

Accordingly, at the time of issuance, the patent was entitled to an overall adjustment of 300 days.

This application file will be forwarded to the Certificate of Corrections branch for issuance of a certificate of correction to indicate that the term of this patent is extended or adjusted under 35 U.S.C. 154(b) by 300 days.

It is noted that applicants submitted $400.00 in connection with the instant application for PTA. The current application fee is $200.00. A refund of $200.00 of the fee submitted has been requested from the Finance Office, Refund Section.

Telephone inquiries specific to this matter should be directed to Petitions Attorney Alesia M. Brown at (571) 272-3205.

Nancy Johnson
Senior Petitions Attorney
Office of Petitions

Enclosure: Draft Certificate of Correction

UNITED STATES PATENT AND TRADEMARK OFFICE

CERTIFICATE OF CORRECTION

PATENT	:	6,911,207 B1
DATED	:	June 28, 2005
INVENTOR(S)	:	Jochmus, et al.

It is certified that error appears in the above-identified patent and that said Letters Patent is hereby corrected as shown below:

On the cover page,

[*] Notice: Subject to any disclaimer, the term of this patent is extended or adjusted under 35 USC 154(b) by 180 days

Delete the phrase "by 180 days" and insert – by 300 days--

11 JUN 2003

#9

UNITED STATES PATENT AND TRADEMARK OFFICE

COMMISSIONER FOR PATENT
UNITED STATES PATENT AND TRADEMARK OFFIC
WASHINGTON, D.C. 20231
www.uspto.go

NIXON PEABODY, LLP
8180 GREENSBORO DRIVE
SUITE 800
MCLEAN, VA 22102

In re Application of	:	
IAN RICHARD JOSEPH BATES	:	DECISION ON
Application No.: 09/980,083	:	
PCT No.: PCT/GB00/02125	:	PETITION
Int. Filing Date: 02 June 2000	:	
Priority Date: 02 June 1999	:	
Attorney's Docket No.: 041618-0060	:	
For: VEHICLE AIR BRAKING SYSTEMS	:	

This is a decision on applicant's request that the application be retained under 37 CFR 1.21(l) which is be treated as a request for processing and retention of application under 37 C.F.R. § 1.53(f). The request was filed in the United States Patent and Trademark Office (USPTO) on 02 December 2002, which requests that the application be retained in accordance with 37 CFR 1.53(f). The request is **GRANTED** as discussed below.

A review of the application file reveals that the oath or declaration executed by the named inventors in compliance with 37 CFR 1.497(a) and (b) identifying the international application number and international filing date is located therein. The review of the application file also reveals that applicant has submitted the requisite $130 retention fee, and as such retention of the application is proper.

This application will be forwarded to the National Stage Processing Branch of the International Division for the placement of a retention label on the face of the application file in accordance with this decision. This application will then be forwarded to the abandoned files repository.

Cynthia M. Kratz

Cynthia M. Kratz
Attorney Advisor
PCT Legal Office

(703)306-5467

UNITED STATES PATENT AND TRADEMARK OFFICE

COMMISSIONER FOR PATENTS
UNITED STATES PATENT AND TRADEMARK OFFICE
WASHINGTON, D.C. 20231
www.uspto.gov

12 SEP 2003

NIXON PEABODY, LLP
8180 GREENSBORO DRIVE
SUITE 800
MCLEAN, VA 22102

In re Application of	:	
IAN RICHARD JOSEPH BATES	:	DECISION ON
Application No.: 09/980,083	:	
PCT No.: PCT/GB00/02125	:	REINSTATEMENT
Int. Filing Date: 02 June 2000	:	
Priority Date: 02 June 1999	:	
Attorney's Docket No.: 041618-0060	:	
For: VEHICLE AIR BRAKING SYSTEMS	:	

This is a decision on applicant's Request for Reinstatement filed in the United States Patent and Trademark Office (USPTO) on 25 July 2003.

On 02 December 2002, applicant requested that the *international application* PCT/GB00/02125 be retained under 37 CFR 1.21(l) in the United States Patent and Trademark Office (USPTO). On 11 June 2003, the request was incorrectly directed to the national stage application, processed and retained under 37 C.F.R. §1.53(f).

On 25 July 2003, applicant requested reinstatement of the national stage application 09/980,083, which is hereby **GRANTED**. The Notification of Abandonment, which was mailed to applicant on 10 July 2003, is hereby **VACATED**. The international application papers will be retained in the national stage application file.

This application will be forwarded to the United States Designated/Elected Office further processing..

Cynthia M. Kratz

Cynthia M. Kratz
Attorney Advisor
Office of PCT Legal Administration
(703)306-5467

UNITED STATES PATENT AND TRADEMARK OFFICE

Commissioner for Patents
United States Patent and Trademark Office
P.O. Box 1450
Alexandria, VA 22313-1450
www.uspto.gov

BLANK ROME LLP
THE WATERGATE BUILDING
600 NEW HAMPSHIRE AVENUE, NW
WASHINGTON DC 20037

COPY MAILED
MAY 0 2 2006
OFFICE OF PETITIONS

ON PETITION

In re Application of :
Van Asselt :
Application No. 09/980,092 :
Filed: February 11, 2002 :
Attorney Docket No. VANASSELT.NEW1// :
115692-00101
For: BALL GAME APPARATUS

This is a decision on the petition, filed March 25, 2005, under 37 CFR 1.137(b) to revive the above-identified application. Petitioner requests the rules be waived and the petition fee be refunded. This request requires a petition under 37 CFR 1.183. Petitioner argues non-receipt of an Office action. Thus, a discussion of a feeless petition under 37 CFR 1.181 to withdraw the holding of abandonment is merited.

The petition under 37 CFR 1.181 is **DISMISSED**.

The petition under 37 CFR 1.137(b) is **GRANTED**.

The petition under 37 CFR 1.183 to waive the revival petition fee is **DISMISSED**.

The above-identified application became abandoned for failure to timely submit a reply within three (3) months of the mailing of the July 2, 2004 non-final Office action. No response being received and no extensions of time being obtained, this application became abandoned on October 3, 2004. The filing of the present petition precedes the mailing of A Notice of Abandonment.

Petitioner states the July 2, 2004 non-final Office action was not received until January 2, 2004 because the Office mailed it to an incorrect correspondence address. A review of the application file reveals that the Office action at issue was returned to the Office on July 21, 2004. Petitioner has provided evidence that a change in correspondence address was received by the Office on June 13, 2003. The address listed in the change in correspondence address document was practitioners' then-current address. However, the change in correspondence address was not entered in this application file. Therefore, the Office mailed the correspondence to practitioners' former correspondence address.

Petitioner is informed that each application file must be complete in and of itself. Rule 1.4(b). The June 13, 2003 change of correspondence address was not present in this application file until a copy was filed with the present petition. The transmittal letter to the June 13, 2003 change of correspondence address does not list the above-identified application. Two applications are identified by serial number and 1,300 other are referenced in the transmittal letter. The transmittal letter does not specifically identify the 1,300 applications to which the change of correspondence address applied. While the June 13, 2003 correspondence address document was received in the Office, it was not filed properly in the above-identified application. Thus, the Office mailed the July 2, 2004 Office action to the then-current correspondence address for the above-identified application.

The petition under 37 CFR 1.181 is dismissed.

Applicant has submitted an amendment in reply to the July 2, 2004 non-final Office action, an acceptable statement of the unintentional nature of the delay in responding to the July 2, 2004 non-final Office action, and the petition fee. Therefore, the petition under 37 CFR 1.137(b) is granted.

Petitioner requests that the petition fee be waived. However, this request requires a petition under 37 CFR 1.183. The cost of this petition is $400.00. Petitioner has not specifically authorized payment of this petition fee. In addition, petitioner's attention is drawn to the fact that the petition to revive fee is statutory and cannot be waived. 35 U.S.C. 41(a)(7). The petition under 37 CFJR 1.183 is dismissed.

After the mailing of this decision the application will be forwarded to Technology Center AU 3711for consideration of the amendment filed on March 25, 2005.

Telephone inquiries should be directed to the undersigned at (571) 272-3230.

E Shirene Willis

E. Shirene Willis
Senior Petitions Attorney
Office of Petitions
Office of the Deputy Commissioner
for Patent Examination Policy

UNITED STATES PATENT AND TRADEMARK OFFICE

COMMISSIONER FOR PATENTS
UNITED STATES PATENT AND TRADEMARK OFFICE
P.O. BOX 1450
ALEXANDRIA, VA 22313-1450
www.uspto.gov

COPY MAILED

JAN 0 5 2005

OFFICE OF PETITIONS

MERCHANT & GOULD PC
P.O. BOX 2903
MINNEAPOLIS, MN 55402-0903

In re Application of	:	
Kenji Narumi, et al.	:	
Application No. 09/980,109	:	ON PETITION
Filed: November 26, 2001	:	
Attorney Docket No. 10873.711 USWO	:	

This is a decision on the petition, filed January 4, 2005, under 37 CFR 1.313(c)(2) to withdraw the above-identified application from issue after payment of the issue fee.

The petition is **GRANTED**.

The above-identified application is withdrawn from issue for consideration of a submission under 37 CFR 1.114 (request for continued examination). See 37 CFR 1.313(c)(2).

Petitioner is advised that the issue fee paid on September 29, 2004, in the above-identified application cannot be refunded. If, however, the above-identified application is again allowed, petitioner may request that it be applied towards the issue fee required by the new Notice of Allowance. [1]

Telephone inquiries relating to this decision should be directed to the undersigned at (571) 272-3204.

The application is being referred to Technology Center AU 2653 for further processing of the request for continued examination under 37 CFR 1.114 filed January 4, 2004.

Sherry D. Brinkley
Petitions Examiner
Office of Petitions
Office of the Deputy Commissioner
for Patent Examination Policy

[1]The request to apply the issue fee to the new Notice may be satisfied by completing and returning the new Issue Fee Transmittal Form PTOL-85(b), which includes the following language thereon: "Commissioner for Patents is requested to apply the Issue Fee and Publication Fee (if any) or re-apply any previously paid issue fee to the application identified above." Petitioner is advised that, whether a fee is indicated as being due or not, the Issue Fee Transmittal Form **must** be completed and timely submitted to avoid abandonment. Note the language in bold text on the first page of the Notice of Allowance and Fee(s) Due (PTOL-85).

UNITED STATES PATENT AND TRADEMARK OFFICE

Commissioner for Patents
United States Patent and Trademark Office
P.O. Box 1450
Alexandria, VA 22313-1450
www.uspto.gov

Date : January 4, 2005

TO : Director, Office of Patent Publication

FROM : Office of the Deputy Commissioner for Patent Examination Policy

SUBJECT : Withdrawal from Issue of

Applicant(s) : Kenji Narumi, et al.
Application No. : 09/980,109
Filed : November 26, 2001

The above-identified application has been assigned Patent No. 6,842,416 and an issue date of January 11, 2005.

It is hereby directed that this application be withdrawn from issue at the request of the applicant.

Do not refund the issue fee.

The following erratum should be published in the Official Gazette if the above-identified application is published in the OG of January 11, 2005:

> "All reference to Patent No. 6,842,416 to KENJI NARUMI, ET AL.of JAPAN for OPTICAL INFORMATION RECORDING METHOD, OPTICAL INFORMATION RECORDING DEVICE AND OPTICAL INFORMATION RECORDING MEDIUM appearing in the Official Gazette of January 11, 2005, should be deleted since no patent was granted."

Sherry D. Brinkley
Petitions Examiner
Office of Petitions
Office of the Deputy Commissioner
for Patent Examination Policy

cc: Paul Harrison, Crystal Park 3-44l (FAX-306-2737)
Deneise Boyd, Crystal Park 2, Suite 1100 (FAX-308-5413)
Mary Louise McAskill, Crystal Park 3-910 (FAX 305-4372)
Niomi Farmer, Crystal Park 3-9l0 (FAX-305-4372)
Mary E. Johnson (Cookie), P/OCS, CM1-6D07
Duane K.Davis, P/OCS, CM1-6A07
Tamara K. Greene, PK3-910

UNITED STATES PATENT AND TRADEMARK OFFICE

COMMISSIONER FOR PATENTS
UNITED STATES PATENT AND TRADEMARK OFFICE
P.O. BOX 1450
ALEXANDRIA, VA 22313-1450
www.uspto.gov

NATH & ASSOCIATES
112 South West Street
Alexandria, VA 22314

COPY MAILED

SEP 20 2006

OFFICE OF PETITIONS

In re Application of
Daniel et al. :
Application No. 09/980,114 :
Filed: March 4, 2002 : NOTICE
Attorney Docket Number: 82330 :

This is a notice regarding your request to change your entity status to large.

In accordance with 37 CFR 1.27(g), said notice is hereby accepted. Office records have been corrected to indicate loss of small entity status in the above-identified application.

Telephone inquiries concerning this matter should be directed to the undersigned at (571) 272-3232.

Derek L. Woods
Attorney
Office of Petitions

APR 0 5 2002

UNITED STATES PATENT AND TRADEMARK OFFICE

COMMISSIONER FOR PATENTS
UNITED STATES PATENT AND TRADEMARK OFFICE
WASHINGTON, D.C. 20231
www.uspto.gov

Gary M. Nath
Nath & Associates, PLLC
1030 15th Street, NW - 6th Floor
Washington, D.C. 20005

In re Application of	:	
ANTICO, et al.	:	DECISION ON
Application No.: 09/980,117	:	
PCT No.: PCT/AU00/00467	:	PETITION UNDER
Int. Filing Date: 17 May 2000	:	
Priority Date: 17 May 1999	:	37 CFR 1.137(b)
Attorney Docket No.: 24845	:	
For: MONITORING OF CONTROLLED MOBILE ENVIRONMENTS	:	

The petition to revive under 37 CFR 1.137(b) filed 30 November 2001 in the above-captioned application is hereby **GRANTED** as follows:

Applicant's statement that the "the entire delay in filing the required reply from the due date for the reply, until the filing of this petition under 37 CFR 1.137(b) is unintentional" meets the requirements of 37 CFR 1.137(b)(3).

A review of the application file reveals that applicant has provided payment of the full U.S. Basic National Fee and the requirements of 37 CFR 1.137(b) have been satisfied. Therefore, the request to revive the application abandoned under 35 U.S.C. 371(d) is granted as to the National stage in the United States of America. Further, a review of the application file reveals that all of the requirements of 35 U.S.C. 371 for entry into the national stage in the United States have been satisfied.

As authorized, $130.00 will be deducted from Deposit Account No.: 14-0112 as payment of the surcharge for providing and oath or declaration later than thirty months from the earliest claimed priority date.

This application is being returned to the United States Designated/Elected Office for processing in accordance with this decision. The 35 U.S.C. 371(c) date is **30 November 2001**.

Derek A. Putonen

Derek A. Putonen
Petitions Attorney
PCT Legal Office
Tel: (703) 305-0130
Fax: (703) 308-6459

UNITED STATES PATENT AND TRADEMARK OFFICE

COMMISSIONER FOR PATENTS
UNITED STATES PATENT AND TRADEMARK OFFICE
P.O. BOX 1450
ALEXANDRIA, VA 22313-1450
www.uspto.gov

NEIL R. GREENBLUM
GREENBLUM & BERNSTEIN, P.L.C.
1950 ROLAND CLARKE PLACE
RESTON, VA 20191

SEP 24 2004

In re Application of Marie-Christine MISSANA et al. Serial No. : 09/980,120 Filed : November 30, 2001 For : BREAST PROSTHESIS	:	DECISION ON PETITION UNDER 37 CFR 1.181

This is in response to the petition filed on November 18, 2003 under 37 CFR 1.181 requesting entry of the proposed changes to the drawings submitted May 9, 2002.

The petition is hereby GRANTED.

A review of the record reveals that in the final rejection the examiner objected to the drawings because they were found to introduce new matter into the drawings. The examiner noted that the original disclosure did not support the showing of the character lines χ' and α'.

Petitioner argues that the drawing changes find clear and full support in the original disclosure. Figure 6 and page 7 lines 26-30 of the original specification provide clear support for complementary angles χ and χ', while page 8 lines 19-24 provides clear support for complementary angles α and α'.

It is concurred that the drawing changes are fully supported by the original disclosure. The proposed drawing corrections filed on May 9, 2002 have been approved.

Summary: The petition is GRANTED.

Corrine McDermott

Corrine McDermott, SPE
Art Unit 3738
(703) 308-2111

UNITED STATES PATENT AND TRADEMARK OFFICE

UNITED STATES DEPARTMENT OF COMMERCE
United States Patent and Trademark Office
Address: COMMISSIONER FOR PATENTS
P.O. Box 1450
Alexandria, Virginia 22313-1450
www.uspto.gov

Richard L Mayer
Kenyon & Kenyon
One Broadway
New York, NY 10004

Mail Date: 04/21/2010

Applicant	: Klaus Winter	: DECISION ON REQUEST FOR
Patent Number	: 7593838	: RECALCULATION of PATENT
Issue Date	: 09/22/2009	: TERM ADJUSTMENT IN VIEW
Appliction No	: 09/980,146	: OF WYETH AND NOTICE OF INTENT TO
Filed	: 06/24/2002	: ISSUE CERTIFICATE OF CORRECTION
		:

The Request for Recalculation is **GRANTED** to the extent indicated.

The patent term adjustment has been determined to be **983** days. The USPTO will *sua sponte* issue a certificate of correction reflecting the amount of PTA days determined by the recalculation.

Prior to the issuance of the certificate of correction, the USPTO will afford patentee an opportunity to be heard and request reconsideration. Accordingly, patentee has **one month or thirty (30) days**, whichever is longer, to file a request for reconsideration of this patent term adjustment calculation. See 35 U.S.C. 154(b)(3)(B)(ii) and 37 CFR 1.322(a)(4). No extensions of time will be granted under 37 CFR 1.136.

Patentee should use document code PET.OP if electronically filing a request for reconsideration of this patent term adjustment calculation. The patentee must also include the information required by 37 CFR 1.705(b)(2) and the fee required by 37 CFR 1.18(e). If patentee does not file a timely request for reconsideration of this patent term adjustment calculation including the information required by 37 CFR 1.705(b)(2) and the fee required by 37 CFR 1.18(e), the USPTO will issue a certificate of correction reflecting the PTA determination noted above.

Patentee should be aware that in order to preserve the right to review in the United States District Court for the District of Columbia of the USPTO patent term adjustment determination, patentee must ensure that he or she also take the steps required under 35 U.S.C. 154(b)(4)(A) in a timely manner. Nothing in the request for recalculation should be construed as providing an alternative time frame for commencing a civil action under 35 U.S.C. 154(b)(4)(A).

Any questions concerning this decision should be directed to the Office of Patent Legal Administration at 571-272-7702.

UNITED STATES PATENT AND TRADEMARK OFFICE

Commissioner for Patents
United States Patent and Trademark Office
P.O. Box 1450
Alexandria, VA 22313-1450
www.uspto.gov

ELIZABETH COLLARD RICHTER
COLLARD & ROE, P.C.
1077 NORTHERN BOULEVARD
ROSLYN, NY 11576

COPY MAILED

NOV 08 2004

OFFICE OF PETITIONS

In re Patent No. 6,761,272 :
Issue Date: July 13, 2004 :
Application No. 09/980,155 : ON PETITION
Filed: November 28, 2001 :
Attorney Docket No. PIESCHEL ETAL-3 PCT :

This is a decision on the petition filed July 23, 2004, to correct the second inventor's name and accept the correction of the second inventor's name on the front page of the above-identified patent.

The petition is **granted.**

The file is being forwarded to the Certificates of Correction Branch for issuance of the requested Certificate of Correction.

Telephone inquiries concerning this matter may be directed to Irvin Dingle at (571) 272-3210.

Irvin Dingle
Petitions Examiner
Office of Petitions
Office of the Deputy Commissioner
For Patent Examination Policy

#4

File No.: 14081-1US JA/ld

Montreal, Canada
November 27, 2001

IN THE UNITED STATES PATENT AND TRADEMARK OFFICE

Applicant:	M'Hammed MOUNTASSIR
Serial No:	unknown
Filed:	§371 of PCT/CA00/00998 filed August 28, 2000
§119(e) Priority:	60/152,457 filed September 3, 1999
Title:	METHOD OF OPTIMIZING PARAMETER VALUES IN A PROCESS OF PRODUCING A PRODUCT
Group Art Unit:	unknown
Examiner:	unknown
Agent of Record:	James Anglehart tel.: (514) 847-4244

09980163.120601

PETITION TO MAKE SPECIAL UNDER 37 CFR 1.102 AND MPEP 708.02 (VIII)

The Commissioner for Patents
Washington, D.C. 20231
U.S.A

Sir:

The present application was the object of a prior art search carried out at the United States Patent and Trademark Office shortly before October 12, 2001 by a professional patent searcher in the following field of search:

Class	Subclass/es		Examiners Consulted
703	2, 11, 12	-U. S. and Foreign	Frejd
700	32, 34, 103	-U. S. and Foreign	Foordon
700	28	-U. S. only	
705	1, 7, 10	-U. S. only	Rimell
706	19	-U. S. only	

12/06/2001 UEDUVIJE 00000144 09980163
04 FC:122 130.00 OP

A detailed discussion of the six (6) references located is provided hereinbelow. These references are enclosed in an IDS filed herewith.

In accordance with MPEP 708.202(VIII), Applicant hereby petitions to make this application special. This Petition also constitutes Applicant's express request for immediate national stage processing under 35USC§371(f). The petition fee of $130 under 37CFR1.17(i) is included. The Commissioner is hereby authorized to charge any deficiency or credit any overpayment regarding the petition fee to deposit account 19-5113.

Applicant According to MPEP 708.02 (VIII), Applicant:

a) requests that this application be made special under 37CFR1.102;

b) consents to elect claims 40 to 51 and related claims if the Examiner finds that a restriction is justified and required **under 37CFR1.475**;

c) submits herewith the results of a prior search;

d) is submitting herewith, a copy of each of the references located;

e) is submitting herewith a detailed discussion which points out, with the particularity required by 37 CFR 1.111(b) and (c), how the claimed subject matter is patentable over the references.

DETAILED DISCUSSION OF THE PRESENT APPLICATION

The present application discloses a method for optimizing process parameters in a process for producing a product. This relates to the general field of experimental design and process improvement. The invention can be applied to any process that is controlled by a set of parameters affecting properties characterizing the product.

A detailed discussion of the state of the art is provided in the Background of the Invention section of Applicant's specification. As an additional immediate reference, Applicant has attached a copy of sections 5.1.1, 5.3.2, 5.3.3.3 and 5.3.3.4 of the Engineering Statistics Handbook (beta version) available on the NIST website. It will be appreciated that the full factorial matrix method is most commonly applied, and that the fractional factorial matrix method is also applied in industry today. Figure 1.1 in section 5.1.1 illustrates clearly how process parameters (i.e. factors) influence the properties of

a product resulting from a process (i.e. responses). In the full factorial matrix method, Table 3.2 in section 5.3.3.3 illustrates clearly how the number of runs required increases exponentially with the number of process parameters (i.e. factors). Table 3.1 of section 5.3.3 illustrates how one may choose an experimental design as a function of the number of process parameters and objective.

In Applicant's invention, the method of producing a product comprises initial steps of optimizing process parameters. The product is characterized by a set of properties. These product properties may be physical properties such as color, weight, strength, resistance, etc. In Applicant's invention, property weights representing an importance of the product properties relative to one another are selected. These property weights are used in conjunction with chosen process parameter values and corresponding product properties to calculate a set of optimal values for the process parameters.

The impact of Applicant's invention is that the number of experimental runs required to calculate the optimal values can be reduced significantly with respect to prior art techniques while maintaining desired accuracy. Tests have shown that Applicant's method will yield optimal values from a number of experimental runs equal to the number of process parameters monitored plus one, and these optimal values are consistently close to optimal values obtained using full or fractional factorial matrix methods. Applicant's method relies on defining the importance of the product properties relative to one another, and in using this data in the calculation of the optimal values from the experimental data of product properties and process parameter values from the reduced number of runs.

SUMMARY OF THE INDEPENDENT CLAIMS

Summary of Claim 25: The method of claim 25 defines assigning property weights to the product properties, and then determining a goal function that is minimized to generate the optimal values for the process parameters. Thus, claim 25 defines a method of producing a product according to a process essentially controlled by a set of

n parameters X_i affecting a set of k properties Y_j characterizing the product. The method comprises:

i. assigning values to a set of k property weights w_j representing relative importance of the properties Y_j for the characterization of the product;

ii. establishing property behavior mathematical relations giving an estimated property Ye_j for each the property Y_j in terms of the parameters X_i from given parameter data and associated property data;

iii. using the property weights w_j to establish a goal function in terms of property weighted deviations between the estimated properties Ye_j and corresponding specified goal values for the properties Y_j;

iv. minimizing the goal function to generate a set of n optimal parameter values for the parameters X_i; and

v. using the set of optimal parameter values in the process to produce the product.

Summary of claim 40: The method of claim 40 defines the steps of conducting a reduced number of experimental runs in combination with determining property weights for the product properties to calculate the optimal values for the process parameters. The method comprises:

a) conducting a number of l of experimental runs of the process each using a selected distinct set of values for the parameters X_i covering substantially all extreme values within a chosen range of values for each one of the parameters X_i, wherein l is at least equal to n + 1 and is substantially less than a number used in the Fractional Factorial Matrix method;

b) measuring values for the properties Y_j characterizing the product in each of the l experimental runs, whereby parameter data and associated property data are obtained from the selected distinct set of values for the parameters X_i and the measured values for the properties Y_j, respectively;

c) determining an importance of the properties Y_j for the characterization of the product, comparing the importance of the properties Y_j relative to one another, and assigning values to a set of k property weights w_j representing a relative importance of the properties Y_j for the characterization of the product;

d) calculating a set of optimal parameter values for the parameters X_i using the measured values for the properties Y_j and the assigned values of the set of k property weights w_j; and

e) producing the product using the optimized process parameter values X_i calculated in the previous step.

DETAILED DISCUSSION OF REFERENCES LOCATED DURING SEARCH:

5,119,468 June 2, 1992 Owens

This reference discloses an apparatus and method for controlling a process using a trained parallel distributed processing network. It describes both batch initialization and on-going control of a physical process using a parallel distributed processing network previously trained to stimulate the process, the process being of the type in which inputs have predetermined physical parameters P produce a product having corresponding physical characteristics C. The disclosed method involves: (a) producing a set of goal signals G corresponding to the desired physical characteristics D of the product of the process; (b) determining the error E between the goal signals G and the outputs Y of the network; (c) determining the values of the updated inputs of the parallel distributed processing network that are needed to drive the error E to a

predetermined minimum, and (d) changing the actual physical parameters P of the process to correspond to the updated inputs values producing the minimum error.

However, the disclosed method does not teach assigning values to a set of property weights representing relative importance of the product properties.

5,218,526 June 8, 1993 Mozzo

This reference is discussed in detail in Applicant's specification at page 3, line 16 to page 4, line 11. As mentioned therein, the weightings as taught by Mozzo do not reflect the relative importance of the product properties involved.

5,457,625 October 10, 1995 Lim et al.

This reference discloses a method of maximizing process production rates using permanent constraints. The described method optimizes the relationship of variables associated with a process having inputs and outputs such that the process has controlled variables, manipulated variables, associated variables and disturbance variables, to maximize production rates, and includes the steps of (a) measuring variables of the process comprising controlled, manipulated, associated and disturbance variables; (b) weighting errors associated with at least one controlled variable relative to other controlled variables so as to prioritize errors associated with the controlled variables; (c) optimizing controlled variable deviations from associated setpoints over a predetermined future time horizon based upon manipulated variable differential moves, such as calculating the sum of the squares of the deviations of the controlled variables with the independent variable being the differential moves of the manipulated variable, or calculating the least squares of the deviations of the controlled variables such that the independent variable includes the differential movement of the manipulated variable; (d) suppressing errors associated with at least one future controlled variable by penalizing for large manipulated variable movement for balancing the reduction of future control error against large manipulated variable movement; (e) weighting at least one manipulated variable for reducing deviation of the manipulated variable from a permanent constraint so as to allow preferential movement of at least one of the manipulated variables over another manipulated variable; (f) applying a

constraint deviation variable to effectuate associated variable deviations outside allowable bounds; and (g) controlling the plant operation in accordance with the differential moves determined in steps (b) through (f).

However, the described method does not teach assigning values to a set of property weights representing relative importance of the product properties.

5,500,795 March 19, 1996 Powers et al.

This reference discloses a method and system for monitoring and controlling the performance of a call-processing center. The method involves defining a plurality of performance variables describing measurable properties of the organization, assigning a weighting factor to each of the normalized performance variables to produce a plurality of weighted normalized performance variables, and calculating the efficiency of the organization as a function of the plurality of weighted normalized performance variables.

This reference does not teach a method of producing a product as defined in Applicant's claims 25 and 40, and does not teach assigning values to a set of property weights representing relative importance of the product properties.

5,933,348 August 3, 1999 Kurtzberg et al.

This patent, granted to IBM, discloses a method for optimizing an experimental design used in a manufacturing process, involving: (1) selecting a number of points for the experimental design; (2) selecting a desired maximum number of interactions among process variables to be included in the experimental design; (3) assigning weights to each of the process variables and all the interactions up to the maximum number; (4) creating a sorted list of decreasing weights by ranking all the process variables and the interactions according to the weights; (5) normalizing the weights to aggregate to unity; (6) obtaining the points assigned to each of the process variables and the interactions by multiplying the normalized weights by the number of points; and (7) utilizing the obtained points to optimize the experimental design.

Kurtzberg teaches a method for experimental design, in which the design is influenced by property weights. Kurtzberg teaches using the property weights to choose

the parameters for the runs, in a manner that makes the experimental design more efficient. In Applicant's invention as defined in either claim 25 or claim 40, the property weights are not used to determine the run parameters, but rather, they are used in the calculation that gives the optimized values of the process parameters from the run data, i.e. the process parameter values and product property values obtained from the experimental runs. Kurtzberg therefore does not teach or suggest Applicant's invention as defined in claim 25 or in claim 40.

6,056,781 May 2, 2000 Wassick et al.

This reference is a continuation of US patent 5,740,033 and relates a model predictive controller for a process control system. The process control system includes a real-time executive sequencer projecting a set of future process parameter values to be controlled, and an interactive modeler solving a set of equations as to how the physical process will react to control changes in order to determine an optimized set of control changes. A method involves: projecting a desired set of desired directly controlled parameter values and at least one desired indirectly controlled parameter value over a predetermined control horizon; periodically estimating how the apparatus will react to proposed changes to the value of at least one manipulated parameter over the control horizon, and determining a set of current and future manipulated parameter values which will minimize deviations from the desired set; and causing a process control device in the apparatus to implement the manipulated parameter values.

This reference does not teach a method of producing a product as defined in Applicant's claims 25 and 40, and does not teach assigning values to a set of property weights representing relative importance of the product properties.

CONCLUSION

It is respectfully submitted that none of the references located during Applicant's search discloses or suggests, taken alone or in combination, the method defined in claim 25 or claim 40.

The Commissioner for Patents

PETITION TO MAKE SPECIAL

In view of the foregoing, it is believed that the present application is in good order to be made special, and early consideration to that end is accordingly courteously solicited.

In accordance with 37 CFR 1.97(h), the submission of the present information is not to be construed as an admission that such information is, or is to be considered to be material to patentability.

Respectfully submitted,

M'Hammed MOUNTASSIR

By:

James Anglehart
Agent of Record, Registration No. 38,796
OGILVY RENAULT
1600 – 1981 McGill College Avenue
Montreal, Quebec, Canada, H3A 2Y3

Telephone: (514) 847-4244

UNITED STATES PATENT AND TRADEMARK OFFICE

COMMISSIONER FOR PATENT
UNITED STATES PATENT AND TRADEMARK OFFIC
WASHINGTON, D.C. 20231
www.uspto.go

Paper No. 6

James Anglehart
Oglivy Renault
1981 McGill College Avenue
Suite 1600
Montreal, Quebec, Canada H3A 2Y3

MAILED

JUN 07 2002

Technology Center 2100

In re Application of: M'Hammed Mountassir	)	
Application No. 09/980,163	)	DECISION ON PETITION FOR
Filed: November 30, 2001	)	ACCELERATED
For: METHOD OF OPTIMIZING	)	EXAMINATION UNDER
PARAMETER VALUES IN A	)	M.P.E.P. §708.02(VIII)
PROCESS OF PRODUCING A	)	
PRODUCT	)	

This is a decision on the petition, filed November 30, 2001 under 37 C.F.R. §1.102(d) and M.P.E.P. §708.02(VIII): Accelerated Examination, to make the above-identified application special.

M.P.E.P. §708.02, Section VIII which sets out the prerequisites for a grantable petition for Accelerated Examination under 37 C.F.R. §1.102(d) states in relevant part:

A new application (one which has not received any examination by the examiner) may be granted special status provided that applicant (and this term includes applicant's attorney or agent) complies with each of the following items:

(a) Submits a petition to make special accompanied by the fee set forth in 37 CFR 1.17(h);

(b) Presents all claims directed to a single invention, or if the Office determines that all the claims presented are not obviously directed to a single invention, will make an election without traverse as a prerequisite to the grant of special status.

(c) Submits a statement(s) that a pre - examination search was made, listing the field of search by class and subclass, publication, Chemical Abstracts, foreign patents, etc. A search made by a foreign patent office satisfies this requirement;

(d) Submits one copy each of the references deemed most closely related to the subject matter encompassed by the claims if said references are not already of record; and

(e) Submits a detailed discussion of the references, which discussion points out, with the particularity required by 37 CFR 1.111(b) and (c), how the claimed subject matter is patentable over the references.

> In those instances where the request for this special status does not meet all the prerequisites set forth above, ***applicant will be notified and the defects in the request will be stated***. The application will remain in the status of a new application awaiting action in its regular turn. In those instances where a request is defective in one or more respects, applicant will be given one opportunity to perfect the request in a renewed petition to make special. If perfected, the request will then be granted. If not perfected in the first renewed petition, any additional renewed petitions to make special may or may not be considered at the discretion of the Group Special Program Examiner.

The petition is deficient in that, Applicant's detailed discussion of the references as required by section (e) does not have the particularity required by 37 CFR 1.111(b) and (c) since the detailed discussion merely paraphrases the references provided in each reference. Therefore, the submission does not satisfy the requirement, as it does not provide a ***detailed discussion*** of the references. The discussion also does not point out how the ***claimed subject matter is patentable over the references***. That is, the discussion of the claims does not refer to specific limitations of the claims, but instead makes generalized statements concerning the claimed subject matter.

Accordingly, the Petition is **DISMISSED**. The application file is being forwarded to Central Files to await examination in its proper turn based on its effective filing date.

Any request for reconsideration must be filed within two months of the mailing date of this decision.

Pinchus M. Laufer

Pinchus M. Laufer
Special Programs Examiner
Technology Center 2100
Computer Architecture, Software, and Electronic Commerce
(703) 306-4160

2/A/29 #8 2123

File No.: 14081-1US JA/ld

Montreal, Canada
November 27, 2002

IN THE UNITED STATES PATENT AND TRADEMARK OFFICE

Applicant:	M'Hammed MOUNTASSIR
Serial No:	09/980,163
Filed:	§371 of PCT/CA00/00998 filed August 28, 2000
§119(e) Priority:	60/152,457 filed September 3, 1999
Title:	METHOD OF OPTIMIZING PARAMETER VALUES IN A PROCESS OF PRODUCING A PRODUCT
Tech Center:	2100
Special Programs Examiner:	Pinchus M. Laufer
Agent of Record:	James Anglehart

tel: (703) 306-4160
tel.: (514) 847-4244

RECEIVED
DEC 02 2002
OFFICE OF PETITIONS

PETITION TO MAKE SPECIAL UNDER 37 CFR 1.102 AND MPEP 708.02 (VIII)

RECEIVED
DEC 10 2002
Technology Center 2100

The Commissioner for Patents
Washington, D.C. 20231
U.S.A

Sir:

A negative decision on the petition filed November 30, 2001 for accelerated examination under MPEP§708.02(VIII) was mailed on June 7, 2002. This petition is a revised version of the said petition, and is believed to be grantable.

The present application was the object of a prior art search carried out at the United States Patent and Trademark Office shortly before October 12, 2001 by a professional patent searcher in the following field of search:

Class	Subclass/es		Examiners Consulted
703	2, 11, 12	-U. S. and Foreign	Frejd
700	32, 34, 103	-U. S. and Foreign	Foordon
700	28	-U. S. only	

12/03/2002 MWELLEY 00000014 09980163
01 FC:1463 130.00 OP

705	1, 7, 10	-U. S. only	Rimell
706	19	-U. S. only	

A detailed discussion of the six (6) references located is provided hereinbelow. These references are enclosed in the IDS filed on November 30, 2001.

The petition fee of $130 under 37CFR1.17(i) is included. The Commissioner is hereby authorized to charge any deficiency or credit any overpayment regarding the petition fee to deposit account 19-5113.

Applicant According to MPEP 708.02 (VIII), Applicant:

a) requests that this application be made special under 37CFR1.102;

b) consents to elect claims 40 to 51 and related claims if the Examiner finds that a restriction is justified and required **under 37CFR1.475**;

c) submits herewith the results of a prior search;

d) is submitting herewith, a copy of each of the references located;

e) is submitting herewith a detailed discussion which points out, with the particularity required by 37 CFR 1.111(b) and (c), how the claimed subject matter is patentable over the references.

DETAILED DISCUSSION OF THE PRESENT APPLICATION

The present application discloses a method for optimizing process parameters in a process for producing a product. This relates to the general field of experimental design and process improvement. The invention can be applied to any process that is controlled by a set of parameters affecting properties characterizing the product.

A detailed discussion of the state of the art is provided in the Background of the Invention section of Applicant's specification. As an additional immediate reference, Applicant has attached a copy of sections 5.1.1, 5.3.2, 5.3.3.3 and 5.3.3.4 of the Engineering Statistics Handbook (beta version) available on the NIST website. It will be appreciated that the full factorial matrix method is most commonly applied, and that the fractional factorial matrix method is also applied in industry today. Figure 1.1 in section 5.1.1 illustrates clearly how process parameters (i.e. factors) influence the properties of a product resulting from a process (i.e. responses). In the full factorial matrix method, Table 3.2 in section 5.3.3.3 illustrates clearly how the number of runs required increases

exponentially with the number of process parameters (i.e. factors). Table 3.1 of section 5.3.3 illustrates how one may choose an experimental design as a function of the number of process parameters and objective.

In Applicant's invention, the method of producing a product comprises initial steps of optimizing process parameters. The product is characterized by a set of properties. These product properties may be physical properties such as color, weight, strength, resistance, etc. In Applicant's invention, property weights representing an importance of the product properties relative to one another are selected. These property weights are used in conjunction with chosen process parameter values and corresponding product properties to calculate a set of optimal values for the process parameters.

The impact of Applicant's invention is that the number of experimental runs required to calculate the optimal values can be reduced significantly with respect to prior art techniques while maintaining desired accuracy. Tests have shown that Applicant's method will yield optimal values from a number of experimental runs equal to the number of process parameters monitored plus one, and these optimal values are consistently close to optimal values obtained using full or fractional factorial matrix methods. Applicant's method relies on defining the importance of the product properties relative to one another, and in using this data in the calculation of the optimal values from the experimental data of product properties and process parameter values from the reduced number of runs.

SUMMARY OF THE INDEPENDENT CLAIMS

Summary of Claim 25: The method of claim 25 defines assigning property weights to the product properties, and then determining a goal function that is minimized to generate the optimal values for the process parameters. Thus, claim 25 defines a method of producing a product according to a process essentially controlled by a set of n parameters X_i affecting a set of k properties Y_j characterizing the product. The method comprises:

i. assigning values to a set of k property weights w_j representing relative importance of the properties Y_j for the characterization of the product;

ii. establishing property behavior mathematical relations giving an estimated property Ye_j for each the property Y_j in terms of the parameters X_i from given parameter data and associated property data;

iii. using the property weights w_j to establish a goal function in terms of property weighted deviations between the estimated properties Ye_j and corresponding specified goal values for the properties Y_j;

iv. minimizing the goal function to generate a set of n optimal parameter values for the parameters X_i; and

v. using the set of optimal parameter values in the process to produce the product.

Summary of claim 40: The method of claim 40 defines the steps of conducting a reduced number of experimental runs in combination with determining property weights for the product properties to calculate the optimal values for the process parameters. The method comprises:

a) conducting a number of l of experimental runs of the process each using a selected distinct set of values for the parameters X_i covering substantially all extreme values within a chosen range of values for each one of the parameters X_i, wherein l is at least equal to n + 1 and is substantially less than a number used in the Fractional Factorial Matrix method;

b) measuring values for the properties Y_j characterizing the product in each of the l experimental runs, whereby parameter data and associated property data are obtained from the selected distinct set of

values for the parameters X_i and the measured values for the properties Y_j, respectively;

c) determining an importance of the properties Y_j for the characterization of the product, comparing the importance of the properties Y_j relative to one another, and assigning values to a set of k property weights w_j representing a relative importance of the properties Y_j for the characterization of the product;

d) calculating a set of optimal parameter values for the parameters X_i using the measured values for the properties Y_j and the assigned values of the set of k property weights w_j; and

e) producing the product using the optimized process parameter values X_i calculated in the previous step.

DETAILED DISCUSSION OF REFERENCES LOCATED DURING SEARCH:

5,119,468 June 2, 1992 Owens

This reference discloses an apparatus and method for controlling a process using a trained parallel distributed processing network. It describes both batch initialization and on-going control of a physical process using a parallel distributed processing network previously trained to stimulate the process, the process being of the type in which inputs have predetermined physical parameters P produce a product having corresponding physical characteristics C. The disclosed method involves: (a) producing a set of goal signals G corresponding to the desired physical characteristics D of the product of the process; (b) determining the error E between the goal signals G and the outputs Y of the network; (c) determining the values of the updated inputs of the parallel distributed processing network that are needed to drive the error E to a predetermined minimum, and (d) changing the actual physical parameters P of the process to correspond to the updated inputs values producing the minimum error.

However, Owens does not teach or suggest step (i) of claim 25 or step (c) of claim 40, namely to assign values to a set of property weights representing relative importance of the product properties.

5,218,526 June 8, 1993 Mozzo

This reference is the closest prior art known to Applicant, and is discussed in detail in Applicant's specification at page 3, line 16 to page 4, line 11. As mentioned therein, the weightings as taught by Mozzo do not reflect the relative importance of the product properties involved. The use of the relative importance of the product properties is defined in step (iii) of claim 25 to establish a goal function and in step (d) of claim 40 to determine optimal process parameter values (the assigned values of the set of k property weights w_j are based on the relative importance). Mozzo does not teach or suggest Applicant's invention as defined in claim 25 or claim 40, taken alone or in combination with the references known to Applicant.

5,457,625 October 10, 1995 Lim et al.

This reference discloses a method of maximizing process production rates using permanent constraints. The described method optimizes the relationship of variables associated with a process having inputs and outputs such that the process has controlled variables, manipulated variables, associated variables and disturbance variables, to maximize production rates, and includes the steps of (a) measuring variables of the process comprising controlled, manipulated, associated and disturbance variables; (b) weighting errors associated with at least one controlled variable relative to other controlled variables so as to prioritize errors associated with the controlled variables; (c) optimizing controlled variable deviations from associated setpoints over a predetermined future time horizon based upon manipulated variable differential moves, such as calculating the sum of the squares of the deviations of the controlled variables with the independent variable being the differential moves of the manipulated variable, or calculating the least squares of the deviations of the controlled variables such that the independent variable includes the differential movement of the manipulated variable; (d) suppressing errors associated with at least one future

controlled variable by penalizing for large manipulated variable movement for balancing the reduction of future control error against large manipulated variable movement; (e) weighting at least one manipulated variable for reducing deviation of the manipulated variable from a permanent constraint so as to allow preferential movement of at least one of the manipulated variables over another manipulated variable; (f) applying a constraint deviation variable to effectuate associated variable deviations outside allowable bounds; and (g) controlling the plant operation in accordance with the differential moves determined in steps (b) through (f).

However, Lim et al. do not teach or suggest step (i) of claim 25 or step (c) of claim 40, namely to assign values to a set of property weights representing relative importance of the product properties.

5,500,795 March 19, 1996 Powers et al.

This reference discloses a method and system for monitoring and controlling the performance of a call-processing center. The method involves defining a plurality of performance variables describing measurable properties of the organization, assigning a weighting factor to each of the normalized performance variables to produce a plurality of weighted normalized performance variables, and calculating the efficiency of the organization as a function of the plurality of weighted normalized performance variables.

This reference does not teach a method of producing a product as defined in Applicant's claims 25 and 40, but rather a method and system related to a call-processing center. More distinctively, however, Powers et al. do not teach or suggest step (i) of claim 25 or step (c) of claim 40, namely to assign values to a set of property weights representing relative importance of the product properties.

5,933,348 August 3, 1999 Kurtzberg et al.

This patent, granted to IBM, discloses a method for optimizing an experimental design used in a manufacturing process, involving: (1) selecting a number of points for the experimental design; (2) selecting a desired maximum number of interactions among process variables to be included in the experimental design; (3) assigning weights to each of the process variables and all the interactions up to the maximum

number; (4) creating a sorted list of decreasing weights by ranking all the process variables and the interactions according to the weights; (5) normalizing the weights to aggregate to unity; (6) obtaining the points assigned to each of the process variables and the interactions by multiplying the normalized weights by the number of points; and (7) utilizing the obtained points to optimize the experimental design.

Kurtzberg teaches a method for experimental design, in which the design is influenced by property weights. Kurtzberg teaches using the property weights to choose the parameters for the runs, in a manner that makes the experimental design more efficient. In Applicant's invention as defined in either claim 25 or claim 40, the parameters for the runs are essentially not "optimized", and in fact they are typically so reduced as to be considered unsuitable for conventional experimental design approaches. Thus, in Applicant's invention, the property weights are not used to determine the run parameters, but rather, they are used in the calculation that gives the optimized values of the process parameters from the run data, i.e. the process parameter values and product property values obtained from the experimental runs.

Kurtzberg therefore does not teach or suggest <u>the use of the relative importance of properties</u> to establish a goal function as defined in step (iii) of claim 25 or to establish optimal process parameter values as defined in step (d) of claim 40.

6,056,781 May 2, 2000 Wassick et al.

This reference is a continuation of US patent 5,740,033 and relates a model predictive controller for a process control system. The process control system includes a real-time executive sequencer projecting a set of future process parameter values to be controlled, and an interactive modeler solving a set of equations as to how the physical process will react to control changes in order to determine an optimized set of control changes. A method involves: projecting a desired set of desired directly controlled parameter values and at least one desired indirectly controlled parameter value over a predetermined control horizon; periodically estimating how the apparatus will react to proposed changes to the value of at least one manipulated parameter over the control horizon, and determining a set of current and future manipulated parameter

values which will minimize deviations from the desired set; and causing a process control device in the apparatus to implement the manipulated parameter values.

Wassick et al. do not teach or suggest step (i) of claim 25 or step (c) of claim 40, namely to assign values to a set of property weights representing relative importance of the product properties.

CONCLUSION

It is respectfully submitted that none of the references located during Applicant's search discloses or suggests, taken alone or in combination, the method defined in claim 25 or claim 40.

In view of the foregoing, it is believed that the present application is in good order to be made special, and early consideration to that end is accordingly courteously solicited.

In accordance with 37 CFR 1.97(h), the submission of the present information is not to be construed as an admission that such information is, or is to be considered to be material to patentability.

Respectfully submitted,

M'Hammed MOUNTASSIR

By:

James Anglehart
Agent of Record, Registration No. 38,796
OGILVY RENAULT
1600 – 1981 McGill College Avenue
Montreal, Quebec, Canada, H3A 2Y3

Telephone: (514) 847-4244

UNITED STATES PATENT AND TRADEMARK OFFICE

MAILED

FEB 0 3 2003

Technology Center 2100

COMMISSIONER FOR PATENT
UNITED STATES PATENT AND TRADEMARK OFFIC
WASHINGTON, D.C. 20231
www.uspto.go

Paper No. 9

James Anglehart
Oglivy Renault
1981 McGill College Avenue
Suite 1600
Montreal, Quebec, Canada H3A 2Y3

In re Application of: M'Hammed Mountassir	)	
Application No. 09/980,163	)	DECISION ON PETITION FOR
Filed: November 30, 2001	)	ACCELERATED
For: METHOD OF OPTIMIZING	)	EXAMINATION UNDER 37
PARAMETER VALUES IN A	)	CFR §1.102(d) and MPEP
PROCESS OF PRODUCING A	)	§708.02(VIII)
PRODUCT	)	

This is a decision on the renewed petition, filed December 2, 2002 under 37 CFR §1.102(d) and MPEP §708.02(VIII): Accelerated Examination, to make the above-identified application special. The original petition was filed November 30, 2001, and was dismissed on June 7, 2002 because the petition was deficient. Applicant's detailed discussion of the references did not have the particularity required by 37 CFR 1.111(b) and (c) and did not point out how the claimed subject matter was patentable over the references.

In response, the renewed petition contains a detailed discussion of each reference and how the claimed subject matter is patentable over the references as required MPEP §708.02(VIII).

It is noted that applicant has chosen to elect a group of claims (40-51) at the time of filing the petition should a restriction requirement be made by the Office. However it is clear that Claim 52 was inadvertently omitted. Therefore, should a restriction requirement be made by the Office, the record should reflect applicant has elected the group of Claims 40-52.

The Petition is **GRANTED**.

The application file is being forwarded to the examiner of record for accelerated examination according to the procedures set forth in MPEP §708.02 (VIII). Telephone inquiries regarding this decision should be directed to the undersigned.

Josie A. Ballato
Special Programs Examiner
Technology Center 2100
Computer Architecture, Software, and Information Security
(703) 308-0269

RD

UNITED STATES PATENT AND TRADEMARK OFFICE

COMMISSIONER FOR PATENTS
UNITED STATES PATENT AND TRADEMARK OFFICE
WASHINGTON, D.C. 20231
www.uspto.gov

19 JUL 2002

BIRCH STEWART KOLASCH & BIRCH
PO BOX 747
FALLS CHURCH, VA 22040-0747

In re Application of	:	
HANADA et al.	:	
Application No.: 09/980,203	:	DECISION ON RENEWED
PCT No.: PCT/JP00/01864	:	
Int. Filing Date: 27 March 2000	:	PETITION UNDER 37 CFR 1.181
Priority Date: 16 June 1999	:	
Attorney Docket No.: 0425-0865P	:	
For: LAUNDRY DETERGENT SHEET	:	

This is a decision on applicants' "Letter"filed on 08 February 2002 in the United States Patent and Trademark Office (USPTO) advising that a declaration was filed on 18 January 2002 in the above referenced application and is treated as a petition under 37 CFR 1.181. No petition fee is required.

On 30 January 2002, a Notification of Missing Requirements (Form PCT/DO/EO/905) was mailed to applicants indicating that an oath or declaration in compliance with 37 CFR 1.497(a) and (b) and the surcharge for filing the oath or declaration after the thirty month period were required.

On 08 February 2002, applicants submitted the instant communication indicating that the declaration was allegedly deposited on 18 January 2002, which was treated as a petition under 37 CFR 1.181 along with a copy of a USPTO date-stamped itemized postcard receipt. A copy of the declaration was not filed.

A review of the application file reveals that a declaration was filed on 18 January 2002 and is found in the application file. The declaration was received in the Office of Preliminary Examination (OIPE) and is date-stamped "JAN 18 2002". The declaration, executed by the inventors, is acceptable as it meets the requirements of 37 CFR 1.497 and 35 U.S.C. 371.

CONCLUSION

For the reasons stated above, the petition under 37 CFR 1.181 is **MOOT**.

CONCLUSION

For the reasons stated above, the petition under 37 CFR 1.181 is **MOOT**.

The application will be forwarded to the United States Designated/Elected Office for further processing. The 35 U.S.C. 371(c) date is **18 January 2002.**

Cynthia M. Kratz
Attorney Advisor
PCT Legal Office

CMK/cmk

Telephone: (703) 306-5467

UNITED STATES PATENT AND TRADEMARK OFFICE

COMMISSIONER FOR PATENTS
UNITED STATES PATENT AND TRADEMARK OFFICE
P.O. BOX 1450
ALEXANDRIA, VA 22313-1450
www.uspto.gov

Martin A Farber
Suite 473
866 United Nations Plaza
New York, NY 10017

COPY MAILED
AUG 23 2006
OFFICE OF PETITIONS

In re Application of :
Albert L.V.J. Claessens :
Application No. 09/980,227 :
Filed: March 25, 2002 : ON PETITION
Attorney Docket Number: :
23655IN2PCT/US :

This is a decision on the Petition to Withdraw Holding of Abandonment, filed November 16, 2004. The petition is properly treated under 37 C.F.R. 1.181. The delay in treating the petitions is regretted.

This Petition is hereby **dismissed**.

Any further petition to revive the above-identified application must be submitted within TWO (2) MONTHS from the mail date of this decision. Extensions of time under 37 CFR 1.136(a) are permitted. The reconsideration request should include a cover letter entitled "Request for Reconsideration of Petition under [insert the applicable code section]. This is **not** final agency action within the meaning of 5 U.S.C. § 704.

Background

The above-identified application became abandoned for failure to reply in a timely manner to the Office communication, mailed April 7, 2004. The Office communication set a one (1) month period for reply, and provided for extensions of time under 37 CFR 1.136(a). No reply having been received, the application became abandoned May 8, 2004. A Notice of Abandonment was mailed November 4, 2004.

The instant petition

Applicant files the instant petition and provides that a timely response to the Office communication was filed. In support of

this assertion, Applicant files a copy of a return-receipt postcard acknowledging receipt of an Election and Certificate of Mailing on on May 10, 2004.

Analysis

A review of the postcard reveals that Applicant is correct. The postcard acknowledges receipt of an Election and Certificate of Mailing by this Office on May 10, 2004.

"A postcard receipt which itemizes and properly identifies the papers which are being filed serves as *prima facie* evidence of receipt in the PTO of all items listed thereon by the PTO." MPEP § 503.

Accordingly, Applicant has demonstrated that a timely reply to the Office communication was filed. However, a review of the copy of the Election filed May 10, 2004 reveals that Applicant failed to execute either the Election or the Certificate of Mailing.

While Applicant filed a reply to the Office communication on May 10, 2004, the reply was not a complete and proper reply. 37 CFR 1.135(a) specifies that an application becomes abandoned if applicant "fails to reply" to an office action within the fixed statutory period. This failure may result either from (A) failure to reply within the statutory period, or (B) insufficiency of reply, i.e., failure to file a "complete and proper reply, as the condition of the case may require" within the statutory period (37 CFR 1.135(b)).

Conclusion

Applicant failed to demonstrate that a complete and proper reply to the Office communication was timely filed. The petition is, therefore, dismissed.

Further correspondence with respect to this matter should be addressed as follows:

By mail: Commissioner for Patents
PO Box 1450
Alexandria, VA 22313-1450

By FAX: (571) 273-8300
Attn: Office of Petitions

By hand: Customer Service Window
Randolph Building
401 Dulany Street
Alexandria, VA 22314

Telephone inquiries concerning this matter should be directed to the undersigned at (571) 272-3232.

Derek L. Woods
Attorney
Office of Petitions

UNITED STATES PATENT AND TRADEMARK OFFICE

Commissioner for Patents
United States Patent and Trademark Office
P.O. Box 1450
Alexandria, VA 22313-1450
www.uspto.gov

Martin A Farber
Suite 473
866 United Nations Plaza
New York, NY 10017

COPY MAILED

DEC 0 8 2006

OFFICE OF PETITIONS

In re Application of	:	
Albert L.V.J. Claessens	:	
Application No. 09/980,227	:	ON PETITION
Filing or 371(c) Date: 03/25/2002	:	
Attorney Docket Number:	:	
23655IN2PCT/US	:	

This is a decision on the Petition for Revival of an Application for Patent Abandoned Unintentionally Under 37 C.F.R. § 1.137(b), October 17, 2006, and supplemented November 16, 2006.

This Petition is hereby **granted**.

The above-identified application became abandoned for failure to timely reply to the Office communication, mailed April 7, 2004. The Office communication set a one (1) month period for reply. Extensions of time under 37 CFR 1.136(a) were available. Applicant filed a reply to the Office communication on May 10, 2004; however, the reply was unexecuted. No complete and proper reply having been received, the application became abandoned on May 8, 2004. A Notice of Abandonment was mailed November 4, 2004.

Applicant files the instant petition and response to the Office communication. Accordingly, the petition is granted.

This application is being forwarded to Technology Center Art Unit 3727 for processing of the response.

Telephone inquiries concerning this decision should be directed to the undersigned at (571) 272-3232.

Derek L. Woods
Attorney
Office of Petitions

UNITED STATES PATENT AND TRADEMARK OFFICE

Commissioner for Patents
United States Patent and Trademark Office
P.O. Box 1450
Alexandria, VA 22313-1450
www.uspto.gov

JEFFREY M. GREENMAN
BAYER CORPORATION
400 MORGAN LANE
WEST HAVEN, CT 06516

COPY MAILED

NOV 15 2005

OFFICE OF PETITIONS

In re Application of :
Erwin Bischoff et al. :
Application No. 09/980,242 : ON PETITION
Filed: November 29, 2001 :
Attorney Docket No. LE A 33 535 :

This is a decision on the petition filed October 7, 2005 under 37 CFR 1.137(b),[1] to revive the above-identified application.

The petition under 37 CFR 1.137 (b) is **GRANTED**.

This application became abandoned February 4, 2005 for failure to timely pay the issue fee on or before February 3, 2005. Accordingly, a Notice of Abandonment was mailed March 14, 2005.

The issue fee and petition fee have been applied. All other requirements of 37 CFR 1.137(b) having now been met, this application file is being forwarded to the Publishing Division to be processed into a patent.

Telephone inquiries concerning this matter may be directed to the undersigned Petitions Attorney at (571) 272-3212.

Patricia Faison-Ball
Senior Petitions Attorney
Office of Petitions

---

[1] Effective December 1, 1997, the provisions of 37 CFR 1.137(b) now provide that where the delay in reply was unintentional, a petition may be filed to revive an abandoned application or a lapsed patent pursuant to 37 CFR 1.137(b). A grantable petition filed under the provisions of 37 CFR 1.137(b) must be accompanied by:

(1) the required reply, unless previously filed. In a nonprovisional application abandoned for failure to prosecute, the required reply may be met by the filing of a continuing application. In a nonprovisional application filed on or after June 8, 1995, and abandoned for failure to prosecute, the required reply may also be met by the filing of a request for continued examination in compliance with § 1.114. In an application or patent, abandoned or lapsed for failure to pay the issue fee or any portion thereof, the required reply must be the payment of the issue fee or any outstanding balance thereof.

(2) the petition fee as set forth in 37 CFR 1.17(m);

(3) a statement that the entire delay in filing the required reply from the due date for the reply until the filing of a grantable petition pursuant to 37 CFR 1.137(b) was unintentional. The Commissioner may required additional information where there is a question whether the delay was unintentional; and

(4) any terminal disclaimer (and fee as set forth in 37 CFR 1.20(d)) required pursuant to 37 CFR 1.137(c)).

UNITED STATES PATENT AND TRADEMARK OFFICE

COMMISSIONER FOR PATENTS
UNITED STATES PATENT AND TRADEMARK OFFICE
P.O. BOX 1450
ALEXANDRIA, VA 22313-1450
www.uspto.gov

Paper No. 10

MAILED
DEC 15 2003

OFFICE OF DIRECTOR GROUP

KENYON & KENYON
One Broadway
New York, NY 10004

In re Application of:
KOOPS *et al.*
Serial No.: 09/980,250
Filed: May 24, 2002
Attorney Docket No.: **2345/170**

DECISION ON REQUEST TO WITHDRAW FROM RECORD

This is a decision on the request to withdraw as attorney of record under 37 C.F.R. § 1.36, filed June 19, 2003.

The request is **DISMISSED** as moot.

A review of the application file record reveals a proper revocation and power of attorney, to the attorneys of Woodling, Krost & Rust, was filed on June 03, 2003. As such, the power of attorney for the attorneys and agents requesting withdrawal has already been revoked. Accordingly, the present request is moot, and must be dismissed.

All future communications form the Office will continue to be directed to the below-listed address until otherwise notified by applicant.

Inquiries related to this decision should be directed to Clayton E. LaBalle at (703) 308-0519.

Clayton E. LaBalle, Special Programs Examiner
Technology Center 2800
Semiconductors, Electrical and Optical
Systems and Components

cc: Kenneth L. Mitchell
Woodling, Krost & Rust
9213 Chillicothe Rd.
Kirtland OH 44094

UNITED STATES PATENT AND TRADEMARK OFFICE

UNITED STATES DEPARTMENT OF COMMERCE
United States Patent and Trademark Office
Address: COMMISSIONER FOR PATENTS
P.O. Box 1450
Alexandria, Virginia 22313-1450
www.uspto.gov

APPLICATION NO.	FILING DATE	FIRST NAMED INVENTOR	ATTORNEY DOCKET NO.	CONFIRMATION NO.
09/980,252	02/21/2002	Yasumasa Mizushima	SON-2058/YAM	9700

7590 04/29/2008

Ronald P Kananen
Rader Fishman & Grauer
Suite 501
1233 20th Street NW
Washington, DC 20036

EXAMINER
GORT, ELAINE L

ART UNIT	PAPER NUMBER
3687	

MAIL DATE	DELIVERY MODE
04/29/2008	PAPER

Please find below and/or attached an Office communication concerning this application or proceeding.

The time period for reply, if any, is set in the attached communication.

UNITED STATES PATENT AND TRADEMARK OFFICE

Commissioner for Patents
United States Patent and Trademark Office
P.O. Box 1450
Alexandria, VA 22313-1450
www.uspto.gov

MAILED
FROM DIRECTORS OFFICE

APR 2 8 2008

TECHNOLOGY CENTER 3600

RONALD P KANANEN
RADER FISHMAN & GRAUER
SUITE 501
1233 20th STREET NW
WASHINGTON, DC 20036

In re Application of:
Yasumasa Mizushuma et al.
Application No. 09/980,252
Filed: February 21, 2002
For: CONCENTRATED PHYSICAL DISTRIBUTION SYSTEM FOR CARGO AND METHOD THEREFOR

DECISION ON PETITION UNDER 37 C.F.R. 1.144

This is in response to the petition filed on August 31, 2005 under 37 C.F.R. 1.144 requesting the withdrawal of the restriction requirement made in the office action of June 14, 2004. The delay in treating this petition is sincerely regretted. In the restriction requirement, the Primary Examiner required restriction into three groups. Group I contained claims 1-11. Group II contained claims 12-20. Group III contained groups 21-27.

A review of the file reveals that the Primary Examiner withdrew said restriction requirement and rejoined the claims in her office action dated March 23, 2006.

The petition is therefore **DISMISSED as moot**.

Any questions regarding this decision should be directed to Matthew S. Gart, Supervisory Patent Examiner, at (571) 272-3955.

Wynn Coggins, Director
Patent Technology Center 3600
(571) 272-5350

Msg/snm: 4/14/2008

SM

UNITED STATES PATENT AND TRADEMARK OFFICE

UNITED STATES DEPARTMENT OF COMMERCE
United States Patent and Trademark Office
Address: COMMISSIONER FOR PATENTS
P.O. Box 1450
Alexandria, Virginia 22313-1450
www.uspto.gov

APPLICATION NO.	FILING DATE	FIRST NAMED INVENTOR	ATTORNEY DOCKET NO.	CONFIRMATION NO.
09/980,252	02/21/2002	Yasumasa Mizushima	SON-2058/YAM	9700

7590 04/29/2008

Ronald P Kananen
Rader Fishman & Grauer
Suite 501
1233 20th Street NW
Washington, DC 20036

EXAMINER
GORT, ELAINE L

ART UNIT	PAPER NUMBER
3687	

MAIL DATE	DELIVERY MODE
04/29/2008	PAPER

Please find below and/or attached an Office communication concerning this application or proceeding.

The time period for reply, if any, is set in the attached communication.

UNITED STATES PATENT AND TRADEMARK OFFICE

Commissioner for Patents
United States Patent and Trademark Office
P.O. Box 1450
Alexandria, VA 22313-1450
www.uspto.gov

MAILED
FROM DIRECTORS OFFICE

APR 2 8 2008

TECHNOLOGY CENTER 3600

RONALD P KANANEN
RADER FISHMAN & GRAUER
SUITE 501
1233 20th STREET NW
WASHINGTON, DC 20036

In re Application of:
Yasumasa Mizushuma et al.
Application No. 09/980,252
Filed: February 21, 2002
For: CONCENTRATED PHYSICAL DISTRIBUTION SYSTEM FOR CARGO AND METHOD THEREFOR

DECISION ON PETITION TO REQUEST WITHDRAWAL OF THE FINAL OFFICE ACTION OF MAY 18, 2007 UNDER 37 C.F.R. 1.181

This decision is in response to the petition filed on August 9, 2007 entitled "Petition under 37 C.F.R. 1.181 to Request Withdrawal of Final Office Action."

File History

A non-final office action mailed on January 3, 2007 indicated that claims 37-43 were rejected under 35 U.S.C. 103(a) as being obvious over U.S. Patent Application Publication No. 2005/0091089 to Bjerre.

In the response to said non-final office action, the applicant submitted remarks and added new claims 44-52. However, said applicant did not amend previously presented claims 37-43.

In the final office action of May 18, 2007, the Examiner rejected previously presented claims 37-43 under 35 U.S.C. 103(a) as being obvious over U.S. Patent No. 6,151,588 to Tozzoli et al. The Examiner noted that applicant's amendment necessitated the new grounds of rejection presented in the final office action.

The Instant Petition

The Instant Petition requests reconsideration of the finality of the final office action of May 18, 2007.

Decision

A review of the file reveals that the finality of the final office action of May 18, 2007 has been withdrawn and prosecution was reopened pursuant to a panel decision from pre-appeal brief review mailed on January 4, 2008. A non-final Office action was subsequently mailed on March 13, 2008.

The Instant Petition is therefore **DISMISSED as moot**.

Any questions regarding this decision should be directed to Matthew S. Gart, Supervisory Patent Examiner, at (571) 272-3955.

Wynn Coggins, Director
Patent Technology Center 3600
(571) 272-5350

Msg/snm: 4/14/2008

SM

UNITED STATES PATENT AND TRADEMARK OFFICE

Commissioner for Patents
United States Patent and Trademark Office
P.O. Box 1450
Alexandria, VA 22313-1450
www.uspto.gov

FULBRIGHT & JAWORSKI, LLP
666 FIFTH AVE
NEW YORK, NY 10103-3198

COPY MAILED
DEC 12 2007
OFFICE OF PETITIONS

In re Application of Felix Kratz Application No. 09/980,266 Filed: November 30, 2001 Attorney Docket No. NY-HUBR 1198	DECISION GRANTING PETITION UNDER 37 CFR 1.313(c)(2)

This is a decision on the petition under 37 CFR 1.313(c)(2), filed December 7, 2007, to withdraw the above-identified application from issue after payment of the issue fee.

The petition is **GRANTED**.

The above-identified application is withdrawn from issue for consideration of a submission under 37 CFR 1.114 (request for continued examination). *See* 37 CFR 1.313(c)(2).

Petitioner is advised that the issue fee paid on March 28, 2006 cannot be refunded. If, however, this application is again allowed, petitioner may request that it be applied towards the issue fee required by the new Notice of Allowance.[1]

Telephone inquiries regarding this decision should be directed to April Wise at (571) 272-1642.

This application is being referred to Technology Center AU 1654 for processing of the request for continued examination under 37 CFR 1.114 and for consideration of the concurrently filed information disclosure statement.

Frances M. Hicks
Petitions Examiner
Office of Petitions

[1] *The request to apply the issue fee to the new Notice may be satisfied by completing and returning the new Part B – Fee(s) Transmittal Form (along with any balance due at the time of submission). Petitioner is advised that the Issue Fee Transmittal Form* ***must*** *be completed and timely submitted to avoid abandonment of the application.*

UNITED STATES PATENT AND TRADEMARK OFFICE

Commissioner for Patents
United States Patent and Trademark Office
P.O. Box 1450
Alexandria, VA 22313-1450
www.uspto.gov

MAILED
FROM DIRECTORS OFFICE

SEP 22 2005

TECHNOLOGY CENTER 3600

BROWN RAYSMAN MILLSTEIN
FELDER & STEINER
900 Third Avenue
New York, NY 10022

In re Application of Paul William Chapman et al. Application No. 09/980,284 Filed: February 21, 2002	: : : :	DECISION ON RENEWED PETITION TO WITHDRAW THE HOLDING OF ABANDONMENT

For: INFLATABLE SUPPORT

This is in reply to applicant's renewed petition to avoid abandonment, filed in the United States Patent and Trademark Office, on April 16, 2005.

The petition is **DISMISSED.**

A review of the file record reveals that a Notice of Non-Compliant Amendment was mailed May 24, 2004. Since no reply was received by the Office before the expiration of the statutory period, the application was held abandoned and a notice to this effect was mailed on January 7, 2005.

There is a strong presumption that Office communications properly addressed and delivered to the United States Postal Services, are in fact delivered to the addressee. An allegation that the Office communication was not received must be overcome by a showing that it was not received.

The showing required to establish non-receipt of an Office communication must include all of the following requirements:

(1) A statement from the practitioner stating the Office communication was not received by the practitioner;

(2) A statement attesting to the fact that a search of the file jacket and docket records indicates that the Office communication was not received; and

(3) A copy of the docket record where the non-received Office communication would have been entered had it been received and docketed must be attached to and referenced in practitioner's statement.

The docket records indicated above must include **a copy of the list of all responses in the practitioner's office to which the action was properly sent with the due date at and around June 24, 2004**. See Notice entitled "Withdrawing the Holding of Abandonment When Office Actions Are Not Received," 1156 OG 53 (November 16, 1993).

The petitioner has failed to comply with requirement (3) indicated above. Petitioner has not provided a complete docket record with a copy of the list of all responses in the practitioner's office to which the action was sent with the due date at and around June 24, 2004. The docket records sent in by Petitioner only show where the non-received communication would have been entered had it been received and docketed.

Petitioner's evidence of non-receipt of the Office action mailed May 24, 2004 is insufficient to withdraw the holding of abandonment, and the petition is **DISMISSED**.

Any request for reconsideration of this decision must be submitted within **TWO (2) MONTHS** from the mail date of this decision. Extensions of time under 37 CFR 1.136(a) are permitted. The reconsideration request should include a cover letter entitled "Renewed Petition Under 37 CFR 1.181."

Correspondence with respect to a Petition to Withdraw the Holding of Abandonment under *Delgar Inc. v. Schuyler* should be mailed to the Commissioner for Patents, P.O. Box 1450, Alexandria, VA 22313-1450.

Kenneth J. Dorner
Special Program Examiner
Patent Technology Center 3600
(571) 272-6587

KJD/js: 8/15/05

UNITED STATES PATENT AND TRADEMARK OFFICE

COMMISSIONER FOR PATENTS
UNITED STATES PATENT AND TRADEMARK OFFICE
P.O. BOX 1450
ALEXANDRIA, VA 22313-1450
www.uspto.gov

Brown Raysman Millstein
Felder & Steiner
900 Third Avenue
New York, NY 10022

COPY MAILED
APR 28 2006
OFFICE OF PETITIONS

In re Application of :
Chapman et al. :
Application No. 09/980,284 :
Filed: February 21, 2002 :
Attorney Docket Number: 3315/31 : ON PETITION

This is a decision on the Renewed Petition Under 37 CFR § 1.181, filed March 27, 2006.

This Petition is hereby **granted**.

The above-identified application became abandoned for failure to timely and properly reply to the Notice of Non-compliant Amendment ("Notice"), mailed May 24, 2004. The Notice set a one (1) month period for reply. Extensions of time under 37 CFR 1.136(a) were available. No response having been received, the application became abandoned June 25, 2004. A Notice of Abandonment was mailed January 7, 2005.

With the instant petition, Petitioner has demonstrated non-receipt of the Notice by a preponderance of the evidence.

In view of the foregoing, the petition is granted. The holding of abandonment is hereby withdrawn.

No fee has been charged and none is due.

The application will be referred to Technology Center Art Unit 3673 for processing of the amendment filed with the instant petition.

Telephone inquiries concerning this matter should be directed to the undersigned at (571) 272-3232.

Derek L. Woods
Attorney
Office of Petitions

UNITED STATES PATENT AND TRADEMARK OFFICE

COMMISSIONER FOR PATENTS
UNITED STATES PATENT AND TRADEMARK OFFICE
P.O. BOX 1450
ALEXANDRIA, VA 22313-1450
www.uspto.gov

Paper No. 05052005

Stephen M. Gurey
c/o Docket Clerk
Lucent Technologies Inc. (Room 3J-219)
101 Crawfords Corner Road
Holmdel, NJ 07733-3030

COPY MAILED

MAY 24 2005

OFFICE OF PETITIONS

In re Application of
Samaras et al
Application No. 09/980287
Filed: July 18, 2002
Attorney Docket No. Samaras 7-5-7-19

ON PETITION

This is a decision on the petition under 37 CFR 1.137(b), filed 2/11/2005, to revive the above-identified application.

The petition is **GRANTED**.

The application became abandoned for failure to timely file a reply within the meaning of 37 CFR 1.113 to the final Office action mailed on 1/8/2004. As no reply was received within the meaning of 37 CFR 1.113 and no extensions of time obtained, this application became abandoned on 4/8/2004.

Petitioner has met the requirements for filing a grantable petition under 37 CFR 1.137(b).

This application is being referred to TC 2666 for consideration of the reply filed on 2/11/2005.

Any questions concerning this matter may be directed to Gene Kim at (571)272-6052, or in his absence, the undersigned at (571)272-3217.

Brian Hearn
Office of Petitions
Office of the Deputy Commissioner
for Patent Examination Policy

UNITED STATES PATENT AND TRADEMARK OFFICE

Commissioner for Patents
United States Patent and Trademark Office
P.O. Box 1450
Alexandria, VA 22313-1450
www.uspto.gov

Lucent Technologies Inc
600 Mountain Avenue
PO Box 636
Murray Hill, NJ 07974-0636

COPY MAILED
JUN 29 2007
OFFICE OF PETITIONS

In re Application of	:	
Samaras et al.	:	
Application No.: 09/980287	:	DECISION ON
Filing or 371(c) Date: 07/18/2002	:	PETITION
Title of Invention: TIME-SLOT	:	
PARTITIONING IN A TDMA SYSTEM	:	

This is a decision in response to the Petition To Withdraw Holding of Abandonment, filed April 13, 2007, The correspondence is properly treated under 37 CFR 1.181.

This Petition is hereby **dismissed**.

Any further petition must be submitted within TWO (2) MONTHS from the mail date of this decision. Extensions of time under 37 CFR 1.136(a) are permitted. The reconsideration request should include a cover letter entitled "Renewed Petition under [insert the applicable code section]." This is **not** final agency action within the meaning of 5 U.S.C. § 704.

The above-identified application became abandoned for failure to timely and properly reply to the final Office action, mailed March 28, 2006. The Office action set a three (3) month period for reply, and provided for extensions of time under 37 CFR 1.136(a).

Applicant filed a reply in the form of an Amendment within two (2) months of the mail date of the Office action, on May 22, 2006 (Certificate of Mailing dated May 19, 2006); however, the Amendment failed to place the application in condition for allowance. Applicant was so notified in an Advisory Action mailed May 31, 2007.

No complete and proper reply having been received, the application became abandoned on June 29, 2006. A Notice of Abandonment was mailed March 30, 2007.

Petition under 37 CFR 1.181

Applicant files the instant petition requesting withdrawal of the holding of abandonment because the Advisory Action was not received. In support of this assertion, Applicant files a copy of the docket record for the above-identified application.

Applicable Law, Rules and MPEP

37 CFR 1.135, Abandonment for failure to reply within time period, provides that

> (a) If an applicant of a patent application fails to reply within the time period provided under § 1.134 and § 1.136, the application will become abandoned unless an Office action indicates otherwise.
> (b) Prosecution of an application to save it from abandonment pursuant to paragraph (a) of this section must include such complete and proper reply as the condition of the application may require. The admission of, or refusal to admit, any amendment after final rejection or any amendment not responsive to the last action, or any related proceedings, will not operate to save the application from abandonment. (Emphasis supplied).

MPEP 711.03(c)

The MPEP 711.03(c)(I)(A), Petition To Withdraw Holding of Abandonment Based on Failure To Receive Office Action, explains that

> [e]vidence of nonreceipt of an Office communication or action (e.g., Notice of Abandonment or an advisory action) other than that action to which reply was required to avoid abandonment would not warrant withdrawal of the holding of abandonment. Abandonment takes place by operation of law for failure to reply to an Office action or timely pay the issue fee, not by operation of the mailing of a Notice of Abandonment. See Lorenz v. Finkl, 333 F.2d 885, 889-90, 142 USPQ 26, 29-30 (CCPA 1964); Krahn v. Commissioner, 15 USPQ2d 1823, 1824 (E.D. Va. 1990); In re Application of Fischer, 6 USPQ2d 1573, 1574 (Comm'r Pat. 1988).

Analysis and conclusion

In this instance, Applicant filed a reply to the final Office action; however, the reply failed to place the application in condition for allowance. The application became abandoned for failure to file "such complete and proper reply as the condition of the application may require." The failure to receive the advisory action does not warrant withdrawal of the holding of abandonment.

Alternative venue

Applicant is urged to file a petition stating that the delay was unintentional. An "unintentional" petition under 37 CFR 1.137(b) must be accompanied by the required fee.

The filing of a petition under 37 CFR 1.137(b) cannot be intentionally delayed and therefore must be filed promptly. A person seeking revival due to unintentional delay can not make a statement that the delay was unintentional unless the entire delay, including the delay from the date it was discovered that the application was abandoned until the filing of the petition to revive under 37 CFR 1.137(b), was unintentional. A statement that the delay was unintentional is not

appropriate if petitioner intentionally delayed the filing of a petition for revive under 37 CFR 1.137(b).

Further correspondence with respect to this matter should be addressed as follows:

By mail: Commissioner for Patents
PO Box 1450
Alexandria, VA 22313-1450

By FAX: (571) 273-8300
Attn: Office of Petitions

By hand: Customer Service Window
Randolph Building
401 Dulany Street
Alexandria, VA 22314

Telephone inquiries concerning the Amendment should be directed to the Examiner. Questions regarding this decision should be directed to the undersigned at (571) 272-3232.

Derek L. Woods
Attorney
Office of Petitions

UNITED STATES PATENT AND TRADEMARK OFFICE

Commissioner for Patents
United States Patent and Trademark Office
P.O. Box 1450
Alexandria, VA 22313-1450
www.uspto.gov

Lucent Technologies Inc
600 Mountain Avenue
PO Box 636
Murray Hill, NJ 07974-0636

COPY MAILED

NOV 16 2007

OFFICE OF PETITIONS

In re Application of	:	
Samaras et al.	:	
Application No.: 09/980287	:	DECISION ON
Filing or 371(c) Date: 07/18/2002	:	PETITION
Title of Invention: TIME-SLOT	:	
PARTITIONING IN A TDMA SYSTEM	:	

This is a decision on the petition under the unintentional provisions of 37 CFR 1.137(b), filed October 3, 2007, to revive the above-identified application.

The petition is **GRANTED**.

The application became abandoned for failure to timely file a reply within the meaning of 37 CFR 1.113 to the final Office action of March 28, 2006. The proposed reply required for consideration of a petition to revive must be a Notice of Appeal (and appeal fee required by 37 CFR 41.20(b)(2), an amendment that *prima facie* places the application in condition for allowance, a Request for Continued Examination and submission (37 CFR 1.114), or the filing of a continuing application under 37 CFR 1.53(b). See MPEP 711.03(c)(III)(A)(2). No extensions of time pursuant to the provisions of 37 CFR 1.136(a) were obtained. Accordingly, the date of abandonment of this application is June 29, 2006.

The petition satisfies the requirements of 37 CFR 1.137(b) in that petitioner has supplied (1) the reply in the form of a Request for Continued Examination (RCE) and fee, and the submission required by 37 CFR 1.114; (2) the petition fee; and (3) a proper statement of unintentional delay.

Telephone inquiries concerning this decision should be directed to the undersigned at (571) 272-3232.

This application is being referred to Technology Center AU 2616 for processing of the RCE and for appropriate action by the Examiner in the normal course of business on the amendment submitted with the petition in accordance with 37 CFR 1.114.

Derek L. Woods
Attorney
Office of Petitions

UNITED STATES PATENT AND TRADEMARK OFFICE

Commissioner for Patents
United States Patent and Trademark Office
P.O. Box 1450
Alexandria, VA 22313-1450
www.uspto.gov

BLAKELY SOKOLOFF TAYLOR & ZAFMAN
12400 WILSHIRE BOULEVARD
SEVENTH FLOOR
LOS ANGELES, CA 90025

COPY MAILED

OCT 2 7 2004

OFFICE OF PETITIONS

ON PETITION

In re Application of :
Joel Oiry et al :
Application No. 09/980,291 :
Filed: November 27, 2001 :
Attorney Docket No. 15675P381

This is a decision on the petition, filed September 30, 2004, which is being treated as a petition under 37 CFR 1.313(c)(2) to withdraw the above-identified application from issue after payment of the issue fee.

The petition is **GRANTED**.

The above-identified application is withdrawn from issue for consideration of a submission under 37 CFR 1.114 (request for continued examination). See 37 CFR 1.313(c)(2).

Petitioner is advised that the issue fee paid on January 26, 2004 in the above-identified application cannot be refunded. If, however, the above-identified application is again allowed, petitioner may request that it be applied towards the issue fee required by the new Notice of Allowance.[1]

Telephone inquiries should be directed to Irvin Dingle at (571) 272-3210.

This matter will be forwarded to Technology Center AU 1626 for processing of the request for continued examination under 37 CFR 1.114 and for consideration of the concurrently filed Amendment.

Irvin Dingle
Petitions Examiner
Office of Petitions
Office of the Deputy Commissioner
for Patent Examination Policy

---

[1] The request to apply the issue fee to the new Notice may be satisfied by completing and returning the new Issue Fee Transmittal Form PTOL-85(b), which includes the following language thereon: Commissioner for Patents is requested to apply the Issue Fee and Publication Fee (if any) or re-apply any previously paid issue fee to the application identified above. Petitioner is advised that, whether a fee is indicated as being due or not, the Issue Fee Transmittal Form **must** be completed and timely submitted to avoid abandonment. Note the language in bold text on the first page of the Notice of Allowance and Fee(s) Due (PTOL-85).

UNITED STATES PATENT AND TRADEMARK OFFICE

Commissioner for Patents
United States Patent and Trademark Office
P.O. Box 1450
Alexandria, VA 22313-1450
www.uspto.gov

HARNESS, DICKEY & PIERCE, P.L.C.
P.O. BOX 828
BLOOMFIELD HILLS MI 48303

COPY MAILED

JUL 1 8 2007

OFFICE OF PETITIONS

In re Patent Number: 7161084	:	
Issue Date: 01/09/2007	:	
Application Number: 09/980298	:	ON PETITION
Filing Date: 11/29/2001	:	
Attorney Docket Number: 9637-000034	:	

This is a decision on the petition filed 9 May, 2007, which is being treated as a request under 37 CFR 3.81(b)[1] to correct the name of the assignee on the front page of the above-identified patent by way of a Certificate of Correction.

The request is **GRANTED**.

The certificate of correction fee of $100.00 will be charged to counsel's deposit account as authorized in the present request.

Telephone inquiries concerning this decision may be directed to the undersigned at (571) 272-3231. Inquiries regarding the issuance of a certificate of correction should be directed to the Certificate of Correction Branch at (571) 272-4200.

The Certificates of Correction Branch will be notified of this decision granting the petition under 37 CFR 3.81(b) and directing issuance of the requested Certificate of Correction.

D Wood

Douglas I. Wood
Senior Petitions Attorney
Office of Petitions

---

[1] *See* MPEP 1309, subsection II; and Official Gazette of June 22, 2004.

UNITED STATES PATENT AND TRADEMARK OFFICE

Commissioner for Patents
United States Patent and Trademark Office
P.O. Box 1450
Alexandria, VA 22313-1450
www.uspto.gov

In re Patent No. 6595339
Issue Date: July 22,2003
Application No. 09980319
Filed: November 15,2001
Attorney Docket No. ZAHFRIP392US

:
:DECISION GRANTING PETITION
:UNDER 37 CFR 1.378(c)
:

This is a decision on the electronic petition, filed October 3,2007 ,under 37 CFR 1.378(c) to accept the unintentionally delayed payment of the 3.5 year maintenance fee for the above-identified patent.

The petition is GRANTED.

The maintenance fee is accepted, and the above-identified patent reinstated as of October 3,2007 . This decision also constitutes notice that the fee has been accepted. An electronic copy of the petition and this decision has been created as an entry in an Image File Wrapper. Nevertheless, petitioner should print and retain an independent copy

Telephone inquires related to this electronic decision should be directed to the Electronic Business Center at 1-866-217-9197.

Approved for use through 04/30/2009. OMB 0651-0016
U.S. Patent and Trademark Office: U.S. DEPARTMENT OF COMMERCE
Under the Paperwork Reduction Act of 1995, no persons are required to respond to a collection of information unless it displays valid OMB control number.

PETITION TO ACCEPT UNINTENTIONALLY DELAYED PAYMENT OF MAINTENANCE FEE IN AN EXPIRED PATENT (37 CFR 1.378(c))

Patent Number	Issue Date (YYYY-MM-DD)	Application Number	Filing Date (YYYY-MM-DD)	Docket Number (if applicable)
6595339	2003-07-22	09980319	2001-11-15	ZAHFRI P392US

CAUTION: Maintenance fee (and surcharge, if any) payment must correctly identify: (1) the patent number and (2) the application number of the actual U.S. application leading to issuance of that patent to ensure the fee(s) is/are associated with the correct patent. 37 CFR 1.366(c) and (d).

SMALL ENTITY
☐ Patentee claims, or has previously claimed, small entity status. See 37 CFR 1.27.

LOSS OF ENTITLEMENT TO SMALL ENTITY STATUS
☐ Patentee is no longer entitled to small entity status. See 37 CFR 1.27(g)

NOT Small Entity		Small Entity	
Fee	Code	Fee	Code
◉ 3 ½ year	(1551)	○ 3 ½ year	(2551)
○ 7 ½ year	(1552)	○ 7 ½ year	(2552)
○ 11 ½ year	(1553)	○ 11 ½ year	(2553)

SURCHARGE
The surcharge required by 37 CFR 1.20(i)(2) (Fee Code 1558) must be paid as a condition of accepting unintentionally delayed payment of the maintenance fee.

MAINTENANCE FEE (37 CFR 1.20(e)-(g))
The appropriate maintenance fee must be submitted with this petition.

STATEMENT
THE UNDERSIGNED CERTIFIES THAT THE DELAY IN PAYMENT OF THE MAINTENANCE FEE TO THIS PATENT WAS UNINTENTIONAL

PETITIONER(S) REQUEST THAT THE DELAYED PAYMENT OF THE MAINTENANCE FEE BE ACCEPTED AND THE PATENT REINSTATED

THIS PORTION MUST BE COMPLETED BY THE SIGNATORY OR SIGNATORIES

37 CFR 1.378(d) states: "Any petition under this section must be signed by an attorney or agent registered to practice before the Patent and Trademark Office, or by the patentee, the assignee, or other party in interest."

I certify, in accordance with 37 CFR 1.4(d)(4) that I am

◉ An attorney or agent registered to practice before the Patent and Trademark Office

○ A sole patentee

○ A joint patentee; I certify that I am authorized to sign this submission on behalf of all the other patentees.

○ A joint patentee; all of whom are signing this e-petition

○ The assignee of record of the entire interest

Patent Practitioner			
A signature of the applicant or representative is required in accordance with 37 CFR 1.33 and 10.18. Please see 37 CFR 1.4(d) for the form of the signature			
Signature	/mjb0213/	Date (YYYY-MM-DD)	2007-10-03
Name	Michael J. Bujold	Registration Number	32018

This collection of information is required by 37 CFR 1.378(c). The information is required to obtain or retain a benefit by the public which is to file (and by the USPTO to process) an application. Confidentiality is governed by 35 U.S.C. 122 and 37 CFR 1.11 and 1.14. This collection is estimated to take 1 hour to complete, including gathering, preparing, and submitting the completed application form to the USPTO. Time will vary depending upon the individual case. Any comments on the amount of time you require to complete this form and/ or suggestions for reducing this burden, should be sent to the Chief Information Officer, U.S. Patent and Trademark Office, U.S. Department of Commerce, P.O. Box 1450, Alexandria, VA 22313-1450. DO NOT SEND FEES OR COMPLETED FORMS TO THIS ADDRESS. **This form can only be used when in conjunction with EFS-Web. If this form is mailed to the USPTO, it may cause delays in reinstating the patent.**

Privacy Act Statement

The Privacy Act of 1974 (P.L. 93-579) requires that you be given certain information in connection with your submission of the attached form related to a patent application or patent. Accordingly, pursuant to the requirements of the Act, please be advised that: (1) the general authority for the collection of this information is 35 U.S.C. 2(b)(2); (2) furnishing of the information solicited is voluntary; and (3) the principal purpose for which the information is used by the U.S. Patent and Trademark Office is to process and/or examine your submission related to a patent application or patent. If you do not furnish the requested information, the U.S. Patent and Trademark Office may not be able to process and/or examine your submission, which may result in termination of proceedings or abandonment of the application or expiration of the patent.

The information provided by you in this form will be subject to the following routine uses:

1. The information on this form will be treated confidentially to the extent allowed under the Freedom of Information Act (5 U.S.C. 552) and the Privacy Act (5 U.S.C. 552a). Records from this system of records may be disclosed to the Department of Justice to determine whether the Freedom of Information Act requires disclosure of these record s.

2. A record from this system of records may be disclosed, as a routine use, in the course of presenting evidence to a court, magistrate, or administrative tribunal, including disclosures to opposing counsel in the course of settlement negotiations.

3. A record in this system of records may be disclosed, as a routine use, to a Member of Congress submitting a request involving an individual, to whom the record pertains, when the individual has requested assistance from the Member with respect to the subject matter of the record.

4. A record in this system of records may be disclosed, as a routine use, to a contractor of the Agency having need for the information in order to perform a contract. Recipients of information shall be required to comply with the requirements of the Privacy Act of 1974, as amended, pursuant to 5 U.S.C. 552a(m).

5. A record related to an International Application filed under the Patent Cooperation Treaty in this system of records may be disclosed, as a routine use, to the International Bureau of the World Intellectual Property Organization, pursuant to the Patent Cooperation Treaty.

6. A record in this system of records may be disclosed, as a routine use, to another federal agency for purposes of National Security review (35 U.S.C. 181) and for review pursuant to the Atomic Energy Act (42 U.S.C. 218(c)).

7. A record from this system of records may be disclosed, as a routine use, to the Administrator, General Services, or his/her designee, during an inspection of records conducted by GSA as part of that agency's responsibility to recommend improvements in records management practices and programs, under authority of 44 U.S.C. 2904 and 2906. Such disclosure shall be made in accordance with the GSA regulations governing inspection of records for this purpose, and any other relevant (i.e., GSA or Commerce) directive. Such disclosure shall not be used to make determinations about individuals.

8. A record from this system of records may be disclosed, as a routine use, to the public after either publication of the application pursuant to 35 U.S.C. 122(b) or issuance of a patent pursuant to 35 U.S.C. 151. Further, a record may be disclosed, subject to the limitations of 37 CFR 1.14, as a routine use, to the public if the record was filed in an application which became abandoned or in which the proceedings were terminated and which application is referenced by either a published application, an application open to public inspections or an issued patent.

9. A record from this system of records may be disclosed, as a routine use, to a Federal, State, or local law enforcement agency, if the USPTO becomes aware of a violation or potential violation of law or regulation.

UNITED STATES PATENT AND TRADEMARK OFFICE

Commissioner for Patents
United States Patent and Trademark Office
P.O. Box 1450
Alexandria, VA 22313-1450
www.uspto.gov

THE PROCTER & GAMBLE COMPANY
INTELLECTUAL PROPERTY DIVISION
WINTON HILL TECHNICAL CENTER - BOX 161
6110 CENTER HILL AVENUE
CINCINNATI, OH 45224

COPY MAILED

FEB 07 2005

OFFICE OF PETITIONS

In re Application of :
Wayne E. Beimesch, et al. :
Application No. 09/980,326 :
Filed: November 30, 2001 :
Attorney Docket No. 7629 :

ON PETITION

This is a decision on the petition under 37 CFR 1.137(b) to revive the above-identified application, filed July 27, 2004.

The application became abandoned for failure to pay the issue fee on or before May 27, 2004. On July 27, 2004, the present petition was filed along with the issue fee. The petition is found to comply with the requirements of 37 CFR 1.137(b).

Accordingly, the petition is GRANTED.

The application is being referred to Publishing Division.

Telephone inquires related to this decision should be directed to the undersigned at (571) 272-3204. Telephone inquiries related to processing at Publishing Division should be directed to (703) 305-8283.

Sherry D. Brinkley
Petitions Examiner
Office of Petitions
Office of the Deputy Commissioner
for Patent Examination Policy

UNITED STATES PATENT AND TRADEMARK OFFICE

Commissioner for Patents
United States Patent and Trademark Office
P.O. Box 1450
Alexandria, VA 22313-1450
www.uspto.gov

CHIEF PATENT COUNSEL/SMITH & NEPHEW, INC.
1450 BROOKS ROAD
MEMPHIS TN 38116

COPY MAILED

MAR 20 2008

In re Application of	:	
WINDER, et al.	:	
Application No. 09/980,329	:	DECISION GRANTING PETITION
Filed: March 5, 2002	:	UNDER 37 CFR 1.313(c)(2)
Attorney Docket No. **41482/205543**	:	

This is a decision on the petition under 37 CFR 1.313(c)(2), filed March 18, 2008, to withdraw the above-identified application from issue after payment of the issue fee.

The petition is **GRANTED.**

The above-identified application is withdrawn from issue for consideration of a submission under 37 CFR 1.114 (request for continued examination). *See* 37 CFR 1.313(c)(2).

Petitioner is advised that the issue fee paid on November 8, 2007 cannot be refunded. If, however, this application is again allowed, petitioner may request that it be applied towards the issue fee required by the new Notice of Allowance.[1]

It is noted that the address given on the petition differs from the address of record. If appropriate, a change of address should be filed in accordance with the MPEP 601.03. A courtesy copy of this decision is being mailed to the address given on the petition; however, the Office will mail all future correspondence solely to the address of record.

Telephone inquiries should be directed to the undersigned at (571) 272-7253.

This application is being referred to Technology Center AU 3737 for processing of the request for continued examination under 37 CFR 1.114 and for consideration of the concurrently filed information disclosure statement.

Monica A. Graves
Petitions Examiner
Office of Petitions

cc: **KILPATRICK STOCKTON LLP**
1100 PEACHTREE STREET, SUITE 2800
ATLANTA, GEORGIA 30309-4530

---

[1] *The request to apply the issue fee to the new Notice may be satisfied by completing and returning the new Part B – Fee(s) Transmittal Form (along with any balance due at the time of submission). Petitioner is advised that the Issue Fee Transmittal Form* ***must*** *be completed and timely submitted to avoid abandonment of the application.*

UNITED STATES PATENT AND TRADEMARK OFFICE

COMMISSIONER FOR PATENTS
UNITED STATES PATENT AND TRADEMARK OFFICE
P.O. BOX 1450
ALEXANDRIA, VA 22313-1450
www.uspto.gov

LERNER DAVID LITTENBERG
KRUMHOLZ & MENTLIK
600 SOUTH AVENUE WEST
WESTFIELD, NJ 07090

COPY MAILED
AUG 17 2006
OFFICE OF PETITIONS

In re Application of	:	
Tomoyuki Asano, et al.	:	
Application No. 09/980,340	:	ON PETITION
Filed: March 6, 2002	:	
Attorney Docket No. SONYJP-153	:	

This is a decision on the petition, filed August 8, 2006, under 37 CFR 1.313(c)(2) to withdraw the above-identified application from issue after payment of the issue fee.

The petition is **DISMISSED as moot**.

Unfortunately, the petition was not referred to the appropriate official for a decision until August 15, 2006, the date upon which the above-identified application issued as U.S. Patent No. 7,093,128.

The inconvenience caused petitioner in this matter is sincerely regretted. However, petitioner's attention is directed to 37 CFR 1.313(d) which states that "A petition under this section [37 CFR 1.313(c)] will not be effective to withdraw the application from issue unless it is actually received and granted by the appropriate officials **before the date of issue**." In this case, the petition was not received in the Office of Petitions for consideration until August 15, 2006.

While petitions to withdraw from issue may be mailed to the Commissioner of Patents, as was done in this case, applicants were cautioned to hand carry or fax petitions to withdraw from issue directly to the Office of Petitions to allow sufficient time to process the petition. *(See Revised Procedures for Papers Requiring Immediate Attention (Hand-Carried and Facsimile Transmissions), 1279 Off. Gaz. Pat. Office 149 (Feb. 24, 2004); Revised Procedures for Papers Requiring Immediate Attention, 1280 Off. Gaz. Pat. Office 917 (March 23, 2004).*

The request for continued examination (RCE) filed concurrently with the petition is improper in view of the issuance of the instant application into a patent on August 15, 2006. The RCE and

the information disclosure statement (IDS) will be placed in the file of the above-identified application without further consideration. See 37 CFR 1.97(I). The $790 RCE filing fee paid on August 8, 2006 is being credited to counsel's deposit account.

Telephone inquiries concerning this matter may be directed to the undersigned at (571) 272-3204.

Sherry D. Brinkley
Petitions Examiner
Office of Petitions

09/980,343

SPE RESPONSE FOR CERTIFICATE OF CORRECTION

Paper No.: _____

DATE : 11/5/04

TO SPE OF : ART UNIT 2834

SUBJECT : Request for Certificate of Correction on Patent No.: 6707229

A response is requested with respect to the accompanying request for a certificate of correction.

Please complete this form and return with file, within **7** days to:
Certificates of Correction Branch - PK 3-915
Palm location **7580** - Tel. No. 305-8309

With respect to the change(s) requested, correcting Office and/or Applicant's errors, should the patent read as shown in the certificate of correction? No new matter should be introduced, nor should the scope or meaning of the claims be changed.

Lamonte Newsome

Thank You For Your Assistance

Certificates of Correction Branch

The request for issuing the above-identified correction(s) is hereby:
Note your decision on the appropriate box.

- ☒ **Approved** — All changes apply.
- ☐ **Approved in Part** — Specify below which changes **do not** apply.
- ☐ **Denied** — State the reasons for denial below.

Comments:

DARREN SCHUBERG
SUPERVISORY PATENT EXAMINER
TECHNOLOGY CENTER 2800
SPE

2834
Art Unit

UNITED STATES PATENT AND TRADEMARK OFFICE

COMMISSIONER FOR PATENTS
UNITED STATES PATENT AND TRADEMARK OFFICE
P.O. BOX 1450
ALEXANDRIA, VA 22313-1450
www.uspto.gov

Herbert Dubno
The Firm of Karl F Ross
5676 Riverdale Ave.
Box 900
Riverdale (Bronx) NY 10471

MAILED

APR 04 2005

DIRECTOR'S OFFICE
TECHNOLOGY CENTER 2600

In re Application of :
FRANCINI, GIANLUCA, et. al. :
Serial No.: 09/980,373 :
Filed: November 29, 2001 : DECISION ON PETITION
For: **METHOD OF ANIMATING A SYNTHESISED MODEL OF A HUMAN FACE DRIVEN BY AN ACOUSTIC SIGNAL** : *ACCEPTANCE OF COLOR DRAWINGS*

This is a decision on the petition under 37 C.F.R. § 1.84(a)(2), filed, September 27, 2004, requesting acceptance of color drawings.

The petition requests that the color drawings identified in figures be accepted in lieu of black and white drawings.

A grantable petition under 37 C.F.R. §1.84(a)(2) must be accompanied by a fee set forth under 37 C.F.R. § 1.17(h), 3 (three) set of the color drawings in question, and the specification must contain, or be amended to contain, the following language as the first paragraph in that portion of the specification relating to the brief description of the drawings:

"The file of this patent contains at least one drawing executed in color. Copies of this patent with color drawing(s) will be provided by the Patent and Trademark Office upon request and payment of the necessary fee."

The petition was filed without the required 3 (three) sets of color drawings in question and without the language in the first paragraph of the specification relating to the brief description of the drawings.

The petition is **DENIED**.

Dwayne Bost
Special Program Examiner
Technology Center 2600
Communications

UNITED STATES PATENT AND TRADEMARK OFFICE

Commissioner for Patents
United States Patent and Trademark Office
P.O. Box 1450
Alexandria, VA 22313-1450
www.uspto.gov

WOLF, BLOCK, SCHORR & SOLIS-COHEN LLP
250 PARK AVENUE
NEW YORK, NY 10177

COPY MAILED
MAY 17 2006
OFFICE OF PETITIONS

In re Application of	:	
Ganor et al.	:	
Application No. 09/980,375	:	ON PETITION
Filed: November 29, 2001	:	
Atty Docket Number: 013/02472	:	

This is a decision on the Petition for Revival of Abandoned Application under 37 CFR 1.137(b), filed March 13, 2006.

This Petition is hereby **granted**.

The above-identified application became abandoned for failure to timely and properly reply to the Notice of Allowance and Issue Fee Due, mailed November 7, 2005. The Notice set a non-extendable three (3) month period for reply. No reply having been received, the application became abandoned on February 8, 2006. The mailing of this Decision precedes the mailing of a Notice of Abandonment.

With the instant petition, Applicant has satisfied the requirements of a grantable petition under 37 CFR 1.137(a). The issue fee is filed with the instant petition. Accordingly, the petition is granted.

This application is being referred to Publishing Division for processing into a patent.

Telephone inquiries concerning this decision should be directed to the undersigned at (571) 272-3232.

Derek L. Woods
Attorney
Office of Petitions

14 MAY 2003

#6

UNITED STATES PATENT AND TRADEMARK OFFICE

COMMISSIONER FOR PATENTS
UNITED STATES PATENT AND TRADEMARK OFFICE
P.O. BOX 1450
ALEXANDRIA, VA 22313-1450
www.uspto.gov

Joseph S. Tripoli
THOMSON Multimedia Licensing Inc.
Patent Department
PO Box 5312
Princeton, New Jersey 08540

In re Application of BASSET	:	
U.S. Application No.: 09/980,389	:	DECISION ON PETITION
Int. Application No.: PCT/FR00/01464	:	
Int. Filing Date: 29 May 2000	:	UNDER 37 CFR 1.47(b)
Priority Date: 02 June 1999	:	
Attorney Docket No.: SCP061817	:	
For: COMMUNICATION INSTALLATION FOR	:	
COLLECTIVE DATA RECEPTION	:	

This is in response to the "PETITION UNDER 37 CFR 1.47 FOR ACCEPTANCE OF APPLICATION WITHOUT PARTICIPATION OF INVENTOR" filed 23 July 2002, which is being treated as a petition under 37 CFR 1.47(b) requesting that the present application be accepted for United States national stage processing without the signature of the sole inventor.

BACKGROUND

On 29 May 2000, applicant filed international application PCT/FR00/01464, which claimed priority of an earlier French application filed 02 June 1999. A Demand for international preliminary examination, in which the United States was elected, was filed on 16 December 2000, prior to the expiration of nineteen months from the priority date. Accordingly, the thirty-month period for paying the basic national fee in the United States expired at midnight on 03 December 2001 (02 December 2001 being a Sunday).

On 29 November 2001, applicant filed national stage papers in the United States Designated/Elected Office (DO/EO/US). The submission was accompanied by, *inter alia*, the requisite basic national fee required by 35 U.S.C. 371(c)(1).

On 11 February 2002, the DO/EO/US mailed a Notification of Missing Requirements Under 35 U.S.C. 371 (Form PCT/DO/EO/905), which indicated that an oath or declaration in compliance with 37 CFR 1.497 must be filed.

On 23 July 2002, applicant filed the present petition under 37 CFR 1.47(b). The petition was accompanied by, *inter alia*, a petition and fee for a four month extension of time, the surcharge for filing of the oath or declaration beyond thirty months from the priority date, a

declaration executed by Joseph Tripoli for non-signing inventor Jean Claude Basset, copies and translations of e-mail messages to and from Jean Claude Basset, copies and translations of registered letters to Jean Claude Basset, a copy and translation of a contract transferring proprietary rights to Thomson Multimedia Digital France, and a power of attorney to Joseph Tripoli from Thomson Multimedia Digital France.

DISCUSSION

A petition under 37 CFR 1.47(b) must be accompanied by: (1) the fee under 37 CFR 1.17(I), (2) factual proof that the inventor refuses to execute the application or cannot be reached after diligent effort, (3) a statement of the last known address of the inventor, (4) an oath or declaration by the 37 CFR 1.47(b) applicant on behalf of and as agent for the non-signing inventor, (5) proof that the 37 CFR 1.47(b) applicant has sufficient proprietary interest in the application, and (6) a showing that such action is necessary to preserve the rights of the parties or to prevent irreparable damage. See 37 CFR 1.47(b).

With regard to item (1) above, the requisite fee has been provided.

With regard to item (2) above, MPEP 409.03(d) states in relevant part,

> Where a refusal to sign the application papers is alleged, the circumstances of this refusal must be specified in an affidavit or declaration by the person to whom the refusal was made. Statements by a party not present when an oral refusal is made will not be accepted.
>
> Before a refusal can be alleged, it must be demonstrated that a bona fide attempt was made to present a copy of the application papers (specification, including claims, drawings, and oath or declaration) to the nonsigning inventor for signature. A copy of the application papers should be sent to the last known address of the nonsigning inventor, or, if the nonsigning inventor is represented by counsel, to the address of the nonsigning inventor's attorney.
>
> When there is an express oral refusal, that fact along with the time and place of the refusal must be stated in the affidavit or declaration. When there is an express written refusal, a copy of the document evidencing that refusal must be made part of the affidavit or declaration.
>
> When it is concluded by the 37 CFR 1.47 applicant that a nonsigning inventor's conduct constitutes a refusal, all facts upon which that conclusion is based should be stated in the affidavit or declaration. If there is documentary evidence to support facts alleged in the affidavit or declaration, such evidence should be submitted. Whenever a nonsigning inventor gives a reason for refusing to sign the application oath or declaration, that reason should be stated in the affidavit or declaration.

The petition states that the sole inventor Jean Claude Basset refuses to sign. Exhibit D of the petition indicates that a copy of the application papers were mailed to Mr. Basset on 19

March 2002. Thus, petitioner has demonstrated that a bona fide attempt was made to present a copy of the application papers to Mr. Basset for signature. The petition includes a series of e-mails and registered letters (see exhibits A-D) which request Mr. Basset's signature. The petition effectively indicates that the conclusion that Mr. Basset refuses to execute the application papers is drawn from his failure to return executed copies since none of the e-mails from Mr. Basset specifically indicates his refusal or unwillingness to sign. However, an affidavit or declaration of the facts upon which the conclusion is based has not been provided.

With regard to item (3) above, the petition states the last known address of the nonsigning inventor.

With regard to item (4) above, an oath or declaration executed by the 37 CFR 1.47(b) applicant on behalf of and as agent for the nonsigning inventor(s) has been provided. However, the declaration is **not** acceptable because it does not comply with 37 CFR 1.497(b) which requires that the declaration state the relationship of the person making the declaration to the inventor. Furthermore, MPEP 324 states that when an assignee files an application under 37 CFR 1.47(b), ownership of the application must be established. Under 37 CFR 3.73(b)(1), ownership of the application may be established by: (i) submitting documentary evidence of a chain of title from the original owner to the assignee; or (ii) specifying by reel and frame number where such evidence is recorded in the USPTO.

In the present case, although the petition states that a chain of title is established by Exhibit E, such exhibit is insufficient. Specifically, while Exhibit E adequately demonstrates an assignment from Dassault Automatismes et Telecommunications S. A. to Thomson Multimedia Digital France on the French priority application and any subsequent foreign filings based thereon, petitioner has not provided sufficient evidence of assignment or chain of title from Jean Claude Basset to Dassault Automatismes et Telecommunications S. A (DAT). While Exhibit B (10 January 2001 e-mail from Mr. Basset) appears to contain an admission by the inventor that he does not own the invention, it does not establish that DAT was the assignee.

With regard to item (5) above, the 37 CFR 1.47(b) applicant must prove that (A) the invention has been assigned to the applicant, or (B) the inventor has agreed in writing to assign the invention to the applicant, or (C) the applicant otherwise has sufficient proprietary interest in the subject matter to justify filing of the application. MPEP 409.03(f).

As discussed above, petitioner has not established that the invention has been assigned from the inventor to the 37 CFR 1.47(b) applicant.

CONCLUSION

Because petitioner has not satisfied items (2), (4) and (5) above, the petition under 37 CFR 1.47(b) is DISMISSED without prejudice.

If reconsideration on the merits of the petition is desired, a proper response must be filed within TWO (2) MONTHS from the mail date of this decision. Failure to timely file a proper response will result in abandonment of the application. Any reconsideration request should include a cover letter entitled "Renewed Petition Under 37 CFR 1.47(b)." No additional petition fee is required. Extensions of time are available under 37 CFR 1.136.

Any further correspondence with respect to this matter should be addressed to the Mail Stop PCT, Commissioner for Patents, Office of PCT Legal Administration, P.O. Box 1450, Alexandria, Virginia 22313-1450, with the contents of the letter marked to the attention of the Office of PCT Legal Administration.

Michael A. Neas
PCT Special Program Examiner
Office of PCT Legal Administration

Boris Milef
PCT Legal Examiner
Office of PCT Legal Administration

Telephone: (703) 308-0954
Facsimile: (703) 308-6459

03 SEP 2004

UNITED STATES PATENT AND TRADEMARK OFFICE

Commissioner for Patents
United States Patent and Trademark Office
P.O. Box 1450
Alexandria, VA 22313-1450
www.uspto.gov

Joseph S. Tripoli
THOMSON Multimedia Licensing Inc.
Patent Department
PO Box 5312
Princeton, New Jersey 08540

In re Application of BASSET	:	
U.S. Application No.: 09/980,389	:	DECISION ON PETITION
Int. Application No.: PCT/FR00/01464	:	
Int. Filing Date: 29 May 2000	:	UNDER 37 CFR 1.47(b)
Priority Date: 02 June 1999	:	
Attorney Docket No.: SCP061817	:	
For: COMMUNICATION INSTALLATION FOR	:	
COLLECTIVE DATA RECEPTION	:	

This is in response to the "RENEWED PETITION UNDER 37 CFR 1.47(b) FOR ACCEPTANCE OF APPLICATION WITHOUT PARTICIPATION OF INVENTOR" filed 12 November 2003.

BACKGROUND

On 29 May 2000, applicant filed international application PCT/FR00/01464, which claimed priority of an earlier French application filed 02 June 1999. A Demand for international preliminary examination, in which the United States was elected, was filed on 16 December 2000, prior to the expiration of nineteen months from the priority date. Accordingly, the thirty-month period for paying the basic national fee in the United States expired at midnight on 03 December 2001 (02 December 2001 being a Sunday).

On 29 November 2001, applicant filed national stage papers in the United States Designated/Elected Office (DO/EO/US). The submission was accompanied by, *inter alia*, the requisite basic national fee required by 35 U.S.C. 371(c)(1).

On 11 February 2002, the DO/EO/US mailed a Notification of Missing Requirements Under 35 U.S.C. 371 (Form PCT/DO/EO/905), which indicated that an oath or declaration in compliance with 37 CFR 1.497 must be filed.

On 23 July 2002, applicant filed a petition under 37 CFR 1.47(b). The petition was accompanied by, *inter alia*, a petition and fee for a four month extension of time, the surcharge for filing of the oath or declaration beyond thirty months from the priority date, a declaration executed by Joseph Tripoli for non-signing inventor Jean Claude Basset, copies and translations of e-mail messages to and from Jean Claude Basset, copies and translations of registered letters

to Jean Claude Basset, a copy and translation of a contract transferring proprietary rights to Thomson Multimedia Digital France, and a power of attorney to Joseph Tripoli from Thomson Multimedia Digital France.

On 14 May 2003, the DO/EO/US mailed a Decision On Petition indicating that applicant's petition filed 23 July 2002 was dismissed without prejudice.

On 12 November 2003, applicant filed the instant renewed petition. The petition was accompanied by, *inter alia*, a declaration from Frederique Dersoir describing the particular steps taken in an attempt to obtain Mr. Basset's signature, a declaration of inventorship executed on behalf of the non-signing inventor by Joseph S. Tripoli who is indicated in the declaration as being the Senior Vice President of Thomson Multimedia Licensing, Inc., a copy of Mr. Basset's offer of employment, a copy of relevant French law, a declaration by Brigitte Ruellan indicating that, based on French law and the evidence of record, that DAT acquired proprietary interest in the instant invention from Mr. Basset, and a certified copy of the priority document.

DISCUSSION

A petition under 37 CFR 1.47(b) must be accompanied by: (1) the fee under 37 CFR 1.17(i), (2) factual proof that the inventor refuses to execute the application or cannot be reached after diligent effort, (3) a statement of the last known address of the inventor, (4) an oath or declaration by the 37 CFR 1.47(b) applicant on behalf of and as agent for the non-signing inventor, (5) proof that the 37 CFR 1.47(b) applicant has sufficient proprietary interest in the application, and (6) a showing that such action is necessary to preserve the rights of the parties or to prevent irreparable damage. See 37 CFR 1.47(b).

With regard to item (1) above, the requisite fee was provided in the original petition filed 23 July 2002.

With regard to item (2) above, exhibits A-D and the declaration of Frederique Dersoir demonstrate that a bona fide attempt was made to present a copy of the application papers to Mr. Basset for signature and that Mr. Basset's inaction constitutes a refusal or unwillingness to sign.

With regard to item (3) above, the original petition filed 23 July 2002 states the last known address of the nonsigning inventor.

With regard to item (4) above, the declaration that accompanied the instant renewed petition satisfies the requirement.

With regard to item (5) above, the 37 CFR 1.47(b) applicant has now demonstrated sufficient proprietary interest in the subject matter.

With regard to item (6) above, the filing of the petition under 37 CFR 1.47(b) was

necessary in order to avoid abandonment of the application.

Accordingly, it is appropriate to accord the national stage application status under 37 CFR 1.47(b) at this time.

CONCLUSION

In view of the above, the petition under 37 CFR 1.47(b) is GRANTED.

As provided in 37 CFR 1.47(b), a notice of the filing of this application will be forwarded to the non-signing inventor at his last known address of record.

A notice of the filing of the application under 37 CFR 1.47(b) will be published in the Official Gazette.

The application is being forwarded to the DO/EO/US for further processing under 35 U.S.C. 371, including according a date under 35 U.S.C. 371(c)(1), (2) and (4) of 12 November 2003.

Michael A. Neas
PCT Special Program Examiner
Office of PCT Legal Administration

Boris Milef
PCT Legal Examiner
Office of PCT Legal Administration

Telephone: (703) 308-0954
Facsimile: (703) 308-6459

03 SEP 2004

UNITED STATES PATENT AND TRADEMARK OFFICE

Commissioner for Patents
United States Patent and Trademark Office
P.O. Box 1450
Alexandria, VA 22313-1450
www.uspto.gov

Jean Claude Basset
84 rue Vergniaud
F-75013 Paris
France

In re Application of
BASSET
Application No.: 09/980,389
PCT No.: PCT/FR00/01464
Int. Filing Date: 29 May 2000
Priority Date: 02 June 1999
For: COMMUNICATION INSTALLATION FOR COLLECTIVE DATA RECEPTION

Dear Mr. Basset,

You are named as an inventor in the above-captioned Unites States national stage application, filed under the provisions of 37 CFR 1.47(b) and 35 U.S.C. 116. Should a patent be granted, you will be designated as an inventor.

As a named inventor, you are entitled to inspect any paper in the file wrapper of the application, order copies of all or any part thereof (at a prepaid cost per 37 CFR 1.19) or to make your position of record in the application. Alternatively, you may arrange to do any of the preceding through a registered patent agent or attorney presenting written authorization from you. If you care to join in the application, the law firm of record (see below) would assumably assist you. Joining in the application would entail the filing of an appropriate oath or declaration by you pursuant to 37 CFR 1.63.

Michael A. Neas
PCT Special Program Examiner
Office of PCT Legal Administration

Boris Milef
PCT Legal Examiner
Office of PCT Legal Administration

Telephone: (703) 308-0954
Facsimile: (703) 308-6459

Joseph S. Tripoli
THOMSON Multimedia Licensing Inc.
Patent Department
PO Box 5312
Princeton, New Jersey 08540

UNITED STATES PATENT AND TRADEMARK OFFICE

Commissioner for Patents
United States Patent and Trademark Office
P.O. Box 1450
Alexandria, VA 22313-1450
www.uspto.gov

OFFICIAL GAZETTE NOTICE

37 CFR 1.47 Notice by Publication

Notice is hereby given of the filing of an application with a petition under 37 CFR 1.47 requesting acceptance of the application without the signature of the sole inventor. The petition has been granted. A notice has been sent to the last known address of the non-signing inventor. The inventor whose signature is missing (Jean Claude Basset) may join in the application by promptly filing an appropriate oath or declaration complying with 37 CFR 1.63. The international application number is PCT/FR00/01464 and was filed on 29 May 2000 in the name of Jean Claude Basset for the invention entitled COMMUNICATION INSTALLATION FOR COLLECTIVE DATA RECEPTION. The national stage application number is 09/980,389 and has a 35 U.S.C. 371(c)(1), (2) and (4) date of 12 November 2003.

UNITED STATES PATENT AND TRADEMARK OFFICE

Commissioner for Patents
United States Patent and Trademark Office
P.O. Box 1450
Alexandria, VA 22313-1450
www.uspto.gov

FINNEGAN, HENDERSON, FARABOW,
GARRETT & DUNNER
LLP
901 NEW YORK AVENUE, NW
WASHINGTON DC 20001-4413

MAILED

JUN 22 2009

OFFICE OF PETITIONS

In re Patent No. 7,485,429	:	LETTER REGARDING PATENT
Gullberg	:	TERM ADJUSTMENT AND
Issue Date: February 3, 2009	:	NOTICE OF INTENT TO ISSUE
Application No. 09/980,403	:	CERTIFICATE OF CORRECTION
Filed: April 15, 2002	:	
Attorney Docket No. 10676.0007	:	

This is in response to the "APPLICATION FOR PATENT TERM ADJUSTMENT- POST GRANT," filed February 24, 2009, requesting that the patent term adjustment determination for the above-identified patent be changed from twenty-seven (27) days to sixty-four(64) days. For the reasons set forth herein, the request for reconsideration is being treated as a request that the revised patent term adjustment be corrected from twenty-seven(27) days to fifty-eight(58) days.

The request for reconsideration of patent term adjustment is **GRANTED** to the extent indicated herein.

The patent term adjustment indicated in the patent is to be corrected by issuance of a certificate of correction showing a revised Patent Term Adjustment of fifty-eight **(58)** days.

Patentee is given **THIRTY (30) DAYS or ONE (1) MONTH, whichever is longer**, from the mail date of this decision to respond. No extensions of time will be granted under § 1.136.

On February 3, 2009, the above-identified application matured into U.S. Patent No. 7,485,429 with a patent term adjustment of 27 days.

This request for reconsideration of patent term adjustment was timely filed within two months of the issue date of the patent. See 1.705(d).

The Office acknowledges submission of the $200.00 fee set forth in 37 CFR 1.18(e). No additional fees are required.

Patentee argues that the determination of 27 days is in error in that pursuant to 35 U.S.C. §154(b) the Office failed to issue a patent within three years of the actual filing date of the above-referenced application in accordance with 37 CFR § 1.702(b) and failed to take a certain action within a time frame specified in 37 CFR § 1.702(a).

Patentee argues that the period of adjustment due to the Three Year Delay by the Office, pursuant to 37 CFR § 1.702(b), is calculated from the application's 371 fulfillment date to the filing of a Notice of Appeal.

Patentee is informed that the Three Year Delay period is triggered by the application's commencement date, not the 371 fulfillment date. The commencement date is 30 months from the priority date claimed in the international application, or earlier. The priority date claimed in the international application is June 3, 1999. Thirty months from that date is December 3, 2001, which is the beginning of the Three Year Delay period. The period is terminated by the filing of a Request for Continued Examination (RCE), not a Notice of Appeal. The filing of a RCE cuts-off the applicant's ability to accumulate any additional patent term adjustment against the three-year pendency provision, but does not otherwise affect patent term adjustment. 37 CFR § 1.703(b)(1) Accordingly, the period of adjustment under § 1.702(b) is 425 days, counting the number of days beginning on December 4, 2004 and ending on February 1, 2006, when a RCE was filed.

Patentee assert that in addition to the three year delay period, they are entitled to a period of adjustment due to examination delay, pursuant to 37 CFR §1.702(a)(1) of 394 days for the failure by the Office to mail at least one of a notification under 35 U.S.C. 132 not later than fourteen months after the date the application fulfilled the requirements of 35 U.S.C. 371 in an international application.

Under 37 CFR § 1.703(f), patentee is entitled to a period of patent term adjustment equal to the period of delays based on the grounds set forth in 37 CFR §1.702 reduced by the period of time equal to the period of time during which patentees failed to engage in reasonable efforts to conclude prosecution pursuant to 37 CFR §1.704. In other words, the period of Office delay reduced by the period of applicant delay. The period of reduction of 367 days for applicant delay is not in dispute. Patentee asserts that the total period of Office delay is the sum of the period of Three Years Delay (37 days per patentee's calculation) and the period of Examination Delay (394 days, not in dispute) **to the extent that these periods of delay are not overlapping.**

Patentee contends that no portion of the two periods of delay overlap.

As such, patentee asserts entitlement to a patent term adjustment of 64 days (37 per patentee's calculation +394 reduced by 0 overlap -367 for applicant delay). Considering that the three-year period is properly calculated based on the commencement date and is 425 days, patentee's assertion of entitlement to a patent term adjustment is considered to be 452 (425 + 394 reduced by 0 overlap - 367 for applicant delay).

As discussed above, the Office states that the patent issued 3 years and 425 days after the application's commencement date, the calculation of the three year period ending when the February 1, 2006 RCE was filed. The Office agrees that the action detailed above was not taken within the specified time frame, and thus, the entry of period of adjustment of 394 days is correct. At issue is whether patentees should accrue 425(per Office's calculation of the Three Year Delay Period) days of patent term adjustment for the Office taking in excess of three years to issue the patent, as well as, 394 days for Office failure to take a certain action within a specified time frame (or examination delay).

The Office contends that 394 of the 425 days overlap. Patentee's interpretation of the period of overlap has been considered and found to be incorrect. Patentee's calculation of the period of overlap is inconsistent with the Office's interpretation of this provision. 35 U.S.C. 154(b)(2)(A) limits the adjustment of patent term, as follows:

> to the extent that the periods of delay attributable to grounds specified in paragraph (1) overlap, the period of any adjustment granted under this subsection shall not exceed the actual number of days the issuance of the patent was delayed.

Likewise, 37 CFR 1.703(f) provides that:

> To the extent that periods of delay attributable to the grounds specified in §1.702 overlap, the period of adjustment granted under this section shall not exceed the actual number of days the issuance of the patent was delayed.

As explained in *Explanation of 37 CFR 1.703(f) and of the United States Patent and Trademark Office Interpretation of 35 U.S.C. 154(b)(2)(A)*, 69 Fed. Reg. 34283 (June 21, 2004), the Office interprets 35 U.S.C. 154(b)(2)(A) as permitting either patent term adjustment under 35 U.S.C. 154(b)(1)(A)(i)-(iv), or patent term adjustment under 35 U.S.C. 154(b)(1)(B), but not as permitting patent term adjustment under both 35 U.S.C. 154(b)(1)(A)(i)-(iv) and 154(b)(1)(B). Accordingly, the Office implements the overlap provision as follows:

> If an application is entitled to an adjustment under 35 U.S.C. 154(b)(1)(B), the entire period during which the application was pending (except for periods excluded under 35 U.S.C. 154(b)(1)(B)(i)-(iii)), and not just the period beginning three years after the actual filing date of the application, is the period of delay under 35 U.S.C. 154(b)(1)(B) in determining whether periods of delay overlap under 35 U.S.C. 154(b)(2)(A). Thus, any days of delay for Office issuance of the patent more than 3 years after the filing date of the application, which overlap with the days of patent term adjustment accorded prior to the issuance of the patent will not result in any additional patent term adjustment. See 35 U.S.C. 154(b)(1)(B), 35 U.S.C. 154(b)(2)(A), and 37 CFR § 1.703(f). See *Changes to Implement Patent Term Adjustment Under Twenty Year Term; Final Rule*, 65 Fed. Reg. 54366 (Sept. 18, 2000). See also *Revision of Patent Term Extension and Patent Term Adjustment Provisions; Final Rule*, 69 Fed. Reg. 21704 (April 22, 2004), 1282 Off. Gaz. Pat. Office 100 (May 18, 2004). See also *Explanation of 37 CFR 1.703(f) and of the United States Patent and Trademark*

Office Interpretation of 35 U.S.C. 154(b)(2)(A), 69 Fed. Reg. 34283 (June 21, 2004).

The current wording of § 1.703(f) was revised in response to the misinterpretation of this provision by a number of Patentees. The rule was slightly revised to more closely track the corresponding language of 35 U.S.C. 154(b)(2)(A). The relevant portion differs only to the extent that the statute refers back to provisions of the statute whereas the rule refers back to sections of the rule. This was not a substantive change to the rule nor did it reflect a change of the Office's interpretation of 35 U.S.C. 154(b)(2)(A). As stated in the *Explanation of 37 CFR 1.703(f) and of the United States Patent and Trademark Office Interpretation of 35 U.S.C. 154(b)(2)(A)*, the Office has consistently taken the position that if an application is entitled to an adjustment under the three-year pendency provision of 35 U.S.C. 154(b)(1)(B), the entire period during which the application was pending before the Office (except for periods excluded under 35 U.S.C. 154(b)(1)(B)(i)-(iii)), and not just the period beginning three years after the actual filing date of the application, is the relevant period under 35 U.S.C. 154(b)(1)(B) in determining whether periods of delay "overlap" under 35 U.S.C. 154(b)(2)(A).

This interpretation is consistent with the statute. Taken together the statute and rule provide that to the extent that periods of delay attributable to grounds specified in 35 U.S.C. 154(b)(1) and in corresponding §1.702 overlap, the period of adjustment granted shall not exceed the actual number of days the issuance of the patent was delayed. The grounds specified in these sections cover the A) guarantee of prompt Patent and Trademark Office responses, B) guarantee of no more than 3 year application pendency, and C) guarantee or adjustments for delays due to interference, secrecy orders and appeals. A section by section analysis of 35 U.S.C. 154(b)(2)(A) specifically provides that:

> Section 4402 imposes limitations on restoration of term. In general, pursuant to [35 U.S.C.] 154(b)(2)(A)-(C), total adjustments granted for restorations under [35 U.S.C. 154](b)(1) are reduced as follows: (1) To the extent that there are multiple grounds for extending the term of a patent that may exist simultaneously (e.g., delay due to a secrecy order under [35 U.S.C.] 181 and administrative delay under [35 U.S.C.] 154(b)(1)(A)), the term should not

> be extended for each ground of delay but only for the actual number of days that the issuance of a patent was delayed; See 145 Cong. Rec. S14,718[1]

As such, the period for over 3 year pendency does not overlap only to the extent that the actual dates in the period beginning three years after the commencement date overlap with the actual dates in the periods for failure of the Office to take action within specified time frames. In other words, consideration of the overlap does not begin three years after the commencement date of the application. Treating the relevant period as starting on December 4, 2004, the date that is 3 years after the commencement date of the application is incorrect.

In this instance, the relevant period under 35 U.S.C. 154(b)(1)(B) in determining whether periods of delay "overlap" under 35 U.S.C. 154(b)(2)(A) is the entire period from the application's commencement date to the date of filing of the RCE on February 1, 2006.

Therefore, 31 days, not 0 days, of patent term adjustment should have been entered for the Three Year Delay period, since the period of delay of 425 days attributable to the delay in the issuance of the patent overlaps with the adjustments of 394 days attributable to the ground specified in § 1.702(a)(1). Accordingly, considering the overlap, at issuance, 31 additional days should have been entered for the Office taking in excess of three years to issue the patent after the application commencement date. Pursuant to this decision, those 31 non-overlapping days of Office delay are now being entered (for a total revised patent term adjustment of 58 days).

In other words, patentee is entitled to a patent term adjustment of 58 days (394 days examination delay +425 days Three Year delay reduced by 394 overlap - 367 days for applicant delay).

Accordingly, the patent term adjustment indicated in the patent is to be corrected by issuance of a certificate of correction showing a revised Patent Term Adjustment of fifty-eight(58) days.

---

[1] The AIPA is title IV of the Intellectual Property and Communications Omnibus Reform Act of 1999 (S. 1948), which was incorporated and enacted as law as part of Pub. L. 106-113. The Conference Report for H.R. 3194, 106th Cong. 1st Sess. (1999), which resulted in Pub. L. 106-113, does not contain any discussion (other than the incorporated language) of S. 1948. A section-by-section analysis of S. 1948, however, was printed in the Congressional Record at the request of Senator Lott, See 145 Cong. Rec. S14,708-26 (1999)(daily ed. Nov. 17, 1999).

The application file is being forwarded to the Certificates of Correction Branch for issuance of a certificate of correction in order to rectify this error. The Office will issue a certificate of correction indicating that the term of the above-identified patent is adjusted by fifty-eight (58) days.

Telephone inquiries specific to this matter should be directed to Shirene Willis Brantley, Senior Petitions Attorney, at (571) 272-3230.

Nancy Johnson

Nancy Johnson
Senior Petitions Attorney
Office of the Deputy Commissioner
for Patent Examination Policy

DRAFT

UNITED STATES PATENT AND TRADEMARK OFFICE

CERTIFICATE OF CORRECTION

PATENT : 7,485,429 B1

DATED : February 3, 2009

INVENTOR(S) : Donald Gullberg

It is certified that error appears in the above-identified patent and that said Letters Patent is hereby corrected as shown below:

On the cover page,

[*] Notice: Subject to any disclaimer, the term of this patent is extended or adjusted under 35 USC 154(b) by (27) days

Delete the phrase "by 27 days" and insert – by 58 days--

1772

UNITED STATES PATENT AND TRADEMARK OFFICE

Commissioner for Patents
United States Patent and Trademark Office
P.O. Box 1450
Alexandria, VA 22313-1450
www.uspto.gov

MERCHANT & GOULD PC
P.O. BOX 2903
MINNEAPOLIS, MN 55402-0903

COPY MAILED

SEP 0 3 2004

OFFICE OF PETITIONS

In re Application of :
Dohring, et al. :
Application No. 09/980,419 : ON PETITION
Filed: March 1, 2002 :
Attorney Docket No. 616.95USWO :

This is a decision on the petition under 37 CFR 1.137(b), filed August 17, 2004, to revive the above-identified application.

The petition is **GRANTED**.

This application became abandoned for failure to timely reply to the final Office action mailed December 1, 2003. A three month extension of time having been obtained pursuant to the provisions of 37 CFR 1.136(a), this application became abandoned at midnight on June 1, 2004.

The file is being forwarded to Technology Center 1700 for review of the RCE, filed June 1, 2004, and the submission as required by 37 CFR 1.114, filed August 17, 2004.

Telephone inquiries concerning this matter may be directed to the undersigned at (703)306-9200.

Edward J. Tannouse
Petitions Attorney
Office of Petitions
United States Patent and Trademark Office

SPE I. Yucel

SPE RESPONSE FOR CERTIFICATE OF CORRECTION

Paper No.: _____

DATE : 5/2/04

TO SPE OF : ART UNIT 1636

SUBJECT : Request for Certificate of Correction for Appl. No.: 09/980,429 Patent No.: 6979568

Please respond to this request for a certificate of correction within 7 days.

Please review the requested changes/corrections as shown in the **COCIN** document(s) in the IFW application image. No new matter should be introduced, nor should the scope or meaning of the claims be changed.

Please complete the response (see below) and forward the completed response to scanning using document code **COCX**.

Lamonte M. Newsome
Certificates of Correction Branch
703-308-9390 ext. 112

Thank You For Your Assistance

The request for issuing the above-identified correction(s) is hereby:

Note your decision on the appropriate box.

- ☑ **Approved** — **All** changes apply.
- ☐ **Approved in Part** — Specify below which changes **do not** apply.
- ☐ **Denied** — State the reasons for denial below.

Comments: _____

1636

_____ **SPE** 1633 **Art Unit**

UNITED STATES PATENT AND TRADEMARK OFFICE

Commissioner for Patents
United States Patent and Trademark Office
P.O. Box 1450
Alexandria, VA 22313-1450
www.uspto.gov

KNOBBE MARTENS OLSON & BEAR LLP
2040 MAIN STREET
FOURTEENTH FLOOR
IRVINE CA 92614

COPY MAILED

OCT 12 2006

OFFICE OF PETITIONS

In re Application of
Givargizov et al.
Application No. 09/980,432
Filed: June 11, 2002
Attorney Docket No. GIVAR7.001 APC

ON PETITION

This is a decision on the petition under 37 C.F.R. § 1.137(b), filed July 20, 2006, to revive the above-identified application.

The petition is **GRANTED.**

The petition satisfies the conditions for revival pursuant to the provisions of 37 CFR 1.137(b) in that (1) the reply in the form of the Issue Fee Transmittal with payment of the issue fee; (2) the petition fee; and (3) the required statement of unintentional delay have been received. Accordingly, the response has been accepted as having been unintentionally delayed.

This matter is being referred to the Publishing Division for processing into a patent.

Telephone inquiries regarding this decision should be directed to the undersigned at (571) 272-3206.

Liana Chase Walsh
Petitions Examiner
Office of Petitions

UNITED STATES PATENT AND TRADEMARK OFFICE

MAY 03 2002

COMMISSIONER FOR PATENTS
UNITED STATES PATENT AND TRADEMARK OFFICE
WASHINGTON, D.C. 20231
www.uspto.gov

Smith-Hill & Bedell, P.C.
12670 NW Barnes Road, Suite 104
Portland, OR 97229

In re Application of	:	
Kivisto	:	
Application No.: 09/980436	:	DECISION ON
PCT No.: PCT/FI00/00480	:	
Int. Filing Date: 30 May 2000	:	PETITION UNDER
Priority Date: 17 June 1999	:	
Attorney Docket No.: OUTO 2368	:	37 CFR 1.10(e)
For: Element For Separating An Electrolytic Tank	:	

This is a decision on applicant's "Reply To Notification Of Missing Requirements filed on 28 February 2002, which has been treated as a petition under 37 CFR 1.10(e).

BACKGROUND

This international application was filed on 30 May 2000 and claimed an earlier priority date of 17 June 1999. The International Bureau communicated a copy of the published international application to the USPTO on 28 December 2000. A Demand electing the United States was filed prior to the elapse of 19 months from the priority date. Consequently, the thirty period for payment of the basic national fee in the United States expired as of midnight on 17 December 2001.

On 29 November 2001, applicant filed the basic national fee, accompanied *inter alia* by a surcharge under 37 CFR 1.492(e).

On 29 January 2002, a Notification of Missing Requirements was mailed to applicant, requiring the filing of an oath or declaration of the inventors.

Applicants filed the instant correspondence on 28 February 2002.

DISCUSSION

Review of the record reveals that the instant correspondence, including an executed declaration, was filed on 28 February 2002, within the period for response to the Notification of Missing Requirements mailed on 29 January 2002. However, applicant requests that the declaration be accorded a filing date of 04 January 2002 based on Express Mail evidence.

37 CFR 1.10(e) provides for the assignment of a filing date for correspondence filed by Express Mail but not received in the Office. However, the instant submission is not in compliance with 37 CFR 1.10(e). In particular, the copy of the Express Mail mailing label does not clearly show the "Date In" or other USPS notation of the date of mailing as Express Mail, as required by 37 CFR 1.10(e)(3). Also, the submission does not include a statement

which establishes to the satisfaction of the Commissioner that the papers filed on 28 February 2002 are true copies of the papers allegedly filed by Express Mail on 04 January 2002. Therefore, it would be inappropriate to grant the requested relief on the basis of the present record.

DECISION

The request to treat the declaration as filed on 04 January 2002 is **DISMISSED** without prejudice.

If reconsideration on the merits of this petition is desired, a proper response must be filed within **TWO (2) MONTHS** from the mail date of this decision. Any reconsideration request should include a cover letter entitled "Renewed Petition Under 37 CFR 1.10(e)."

Please direct any further correspondence with respect to this matter to the Assistant Commissioner for Patents, Box PCT, Washington, DC 20231, and address the contents of the letter to the attention of the PCT Legal Office.

This application is being forwarded to the United States Designated/Elected Office (DO/EO/US) for further processing, including the preparation and mailing of a Notification of Acceptance (Form PCT/DO/EO/903). The date of this application under 35 U.S.C. 371 is **28 February 2002** .

Boris Milef
PCT Legal Examiner
PCT Legal Office

George Dombroske
PCT Legal Examiner
PCT Legal Office
Tel: (703) 308-6721
Fax: (703) 308-6459

UNITED STATES PATENT AND TRADEMARK OFFICE

06 SEP 2002

COMMISSIONER FOR PATENTS
UNITED STATES PATENT AND TRADEMARK OFFICE
WASHINGTON, D.C. 20231
www.uspto.gov

Smith-Hill & Bedell, P.C.
12670 NW Barnes Road, Suite 104
Portland, OR 97229

In re Application of	:	
Kivisto	:	
Application No.: 09/980436	:	DECISION ON
PCT No.: PCT/FI00/00480	:	
Int. Filing Date: 30 May 2000	:	PETITION UNDER
Priority Date: 17 June 1999	:	
Attorney Docket No.: OUTO 2368	:	37 CFR 1.10(e)
For: Element For Separating An Electrolytic Tank	:	

This is a decision on applicant's "Renewed Petition Under 37 CFR 1.10(e)" filed on 06 June 2002.

BACKGROUND

On 03 May 2002, a Decision was mailed to applicant, dismissing a petition filed on 28 February 2002 on the basis, in part, that the submission was not in compliance with 37 CFR 1.10(e).

Applicant filed the instant renewed petition on 06 June 2002.

DISCUSSION

37 CFR 1.10(e) provides that

Any person mailing correspondence addressed as set out in §1.1(a) to the Office with sufficient postage utilizing the "Express Mail Post Office to Addressee" service of the USPS but not received by the Office, may petition the Commissioner to consider such correspondence filed in the Office on the USPS deposit date, provided that:

> *(1) The petition is filed promptly after the person becomes aware that the Office has no evidence of receipt of the correspondence;*
>
> *(2) The number of the "Express Mail" mailing label was placed on the paper(s) or fee(s) that constitute the correspondence prior to the original mailing by "Express Mail;" and*
>
> *(3) The petition includes a copy of the originally deposited paper(s) or fee(s) that constitute the correspondence showing the number of the "Express Mail" mailing label thereon, a copy of any returned postcard receipt, and a copy of the "Express Mail" mailing label showing the "date-in," a copy of any other official notation by the USPS relied upon to show the date of deposit, and, if the requested*

filing date is a date other than the "date-in" on the "Express Mail" mailing label or other official notation entered by the USPS, a showing pursuant to paragraph (d)(3) of this section that the requested filing date was the date the correspondence was deposited in the "Express Mail Post Office to Addressee" service prior to the last scheduled pickup for that day; and

(4) The petition includes a statement which establishes, to the satisfaction of the Commissioner, the original deposit of the correspondence and that the copies of the "Express Mail" mailing label, the copy of any returned postcard receipt, and any official notation entered by the USPS are true copies of the originally mailed correspondence, original "Express Mail" mailing label, returned postcard receipt, and official notation entered by the USPS.

Review of the record of the present application reveals that requirement (1) has been satisfied.

Regarding requirement (2), Express Mail mailing label number EL888470666US appears on the "Transmittal of Declaration" filed on 28 February 2002 as a copy of correspondence alleged to have been filed originally on 04 January 2002. Therefore, requirement (2) is satisfied.

Concerning requirement (3), the petition is accompanied by a copy of Express Mail mailing label number EL888470666US, which shows a "Date In" of "01 04 02" and bears a USPS plug stamp dated "JAN 4 2002." Accordingly, requirement 3 is satisfied.

With respect to requirement (4), the petition includes a satisfactory statement that the "copy of the TRANSMITTAL OF DECLARATION and DECLARATION FOR PATENT APPLICATION that were included in the correspondence filed on 28 February 2002 are true copies of the papers that were filed by Express Mail on 04 January 2002." Therefore, requirement (4) is satisfied.

DECISION

The petition under 37 CFR 1.10(e) is **GRANTED**.

This application is being forwarded to the United States Designated/Elected Office (DO/EO/US) for further processing. The date of this application under 35 U.S.C. 371 is **04 January 2002**.

Richard Cole
PCT Legal Examiner
PCT Legal Office

George Dombroske
PCT Legal Examiner
PCT Legal Office
Tel: (703) 308-6721
Fax: (703) 308-6459

This Page Is Inserted by IFW Operations
and is not a part of the Official Record

BEST AVAILABLE IMAGES

Defective images within this document are accurate representations of the original documents submitted by the applicant.

Defects in the images may include (but are not limited to):

- BLACK BORDERS
- TEXT CUT OFF AT TOP, BOTTOM OR SIDES
- FADED TEXT
- ILLEGIBLE TEXT
- SKEWED/SLANTED IMAGES
- COLORED PHOTOS
- BLACK OR VERY BLACK AND WHITE DARK PHOTOS
- GRAY SCALE DOCUMENTS

IMAGES ARE BEST AVAILABLE COPY.

As rescanning documents *will not* correct images, please do not report the images to the Image Problem Mailbox.

13 MAY 2004

UNITED STATES PATENT AND TRADEMARK OFFICE

COMMISSIONER FOR PATENTS
UNITED STATES PATENT AND TRADEMARK OFFICE
P.O. BOX 1450
ALEXANDRIA, VA 22313-1450
www.uspto.gov

John Smith-Hall
SMITH-HILL AND BEDELL, P.C.
12670 N.W. Barnes Road
Suite 104
Portland, Oregon 97220

In re Application of	:
Eljas Saastamoinen et al.	: DECISION ON
Application No.: 09/980,439	:
PCT No.: PCT/FI00/00553	: PETITION
International Filing Date: 20 June 2000	:
Priority Date: 26 June 1999	: UNDER 37 CFR 1.181
For: ARRANGEMENT FOR MEASURING	:
CONCENTRATE FLOW IN CONNECTION	:
WITH A FLOTATION CELL	:

This decision is in response to applicants' PETITION FOR CORRECTION OF 371(c) DATE filed 02 April 2004 requesting that the date under 35 U.S.C. 371 be corrected to 04 January 2002 as opposed to 31 January 2002.

BACKGROUND

On 20 June 2000, applicants filed international application PCT/FI00/00553 claiming priority to an earlier application filed 26 June 1999. The international application designated the United States. A Demand, in which the United States was elected, was timely filed on 26 January 2001. Therefore, applicants' thirty month period for entering the United States national stage expired at midnight on 26 December 2002.

On 29 November 2001, applicants filed a Transmittal Letter (Form PTO-1390) for entry into the national stage in the United States under 35 U.S.C. 371, accompanied by, *inter alia*, the requisite basic national fee.

On 18 January 2002, the United States Designated/Elected Office (DO/EO/US) mailed a NOTIFICATION OF MISSING REQUIREMENTS UNDER 35 U.S.C. 371 IN THE UNITED STATES DESIGNATED/ELECTED OFFICE (DO/EO/US) (Form PCT/DO/EO/905) indicating that an oath or declaration in compliance with 37 CFR 1.497(a) and (b) was required.

On 04 January 2002, applicants filed an executed declaration.

On 22 February 2002, the DO/EO/US mailed a NOTIFICATION OF ACCEPTANCE OF APPLICATION UNDER 35 U.S.C. 371 AND 37 CFR 1.494 OR 1.495 (Form PCT/DO/EO/903) expressing a date under 35 U.S.C. 371 of 31 January 2002.

On 02 April 2004, applicants submitted the instant petition requesting that the date under 35 U.S.C. 371 be corrected to 04 January 2002. The petition is accompanied by a copy of a postcard receipt.

On 04 May 2004, applicants filed a communication by facsimile that included a copy of a declaration and a statement by applicants' counsel indicating that the copy of the declaration is a true copy of that originally filed on 04 January 2002.

DISCUSSION

MPEP at section 503 states, in part:

> "A postcard receipt which itemizes and properly identifies the papers which are being filed serves as *prima facie* evidence of receipt in the PTO of all the items listed thereon on the date stamped thereon by the PTO."

Applicants' date stamped postcard receipt lists a declaration and a transmittal of declaration and includes a U.S. Patent and Trademark Office (PTO) date stamp of 04 January 2002.

CONCLUSION

In view of the above, applicants' petition is **GRANTED**.

The NOTIFICATION OF ACCEPTANCE OF APPLICATION UNDER 35 U.S.C. 371 AND 37 CFR 1.494 OR 1.495 (Form PCT/DO/EO/903) mailed 22 February 2002 is hereby **vacated**.

The application is being returned to the DO/EO/US for issuance of a new Notification of Acceptance Under 35 U.S.C. 371 (Form PCT/DO/EO/903) and a new official filing receipt indicating a date under 35 U.S.C. 371(c)(1), (2) and(4) of 04 January 2002.

Michael A. Neas
PCT Special Program Examiner
Office of PCT Legal Administration

Richard Cole
PCT Legal Examiner
Office of PCT Legal Administration

Telephone: (703) 308-0954
Facsimile: (703) 308-6459

Smith-Hill and Bedell, P.C.

PATENT AND TRADEMARK LAWYERS

12670 NW Barnes Rd., Suite 104
Portland, Oregon 97229
Telephone: (503) 574-3100
Facsimile: (503) 574-3197

John Smith-Hill

Daniel J. Bedell

RECEIVED
MAY 04 2004
PCT SPECIAL
PROGRAMS OFFICE

FAXED
MAY - 4 2004
BY:

FACSIMILE COVER SHEET

To: Michael Neas
PCT Legal

From: John Smith-Hill

Firm: US PATENT AND TRADEMARK OFFICE

Date: May 4, 2004

Fax: 1-703-305-2919

Our ref: OUTO 2367

Your ref: 09/980,439

Pages: Cover + 2

Attached is a true copy of the Declaration for Patent Application that was filed on 4 January 2002.

John Smith-Hill

991484 US

Attorney's Docket No._____

DECLARATION FOR PATENT APPLICATION
(COMBINED WITH POWER OF ATTORNEY)
(ORIGINAL APPLICATION)

As a below named inventor, I hereby declare that:

My residence, post office address, and citizenship are as stated below next to my name. I believe I am the original, first, and sole inventor (if only one name is listed below) or an original, first and joint inventor (if plural names are listed below) of the subject matter which is claimed and for which a patent is sought on the invention entitled:
Arrangement for measuring concentrate flow in connection with a flotation cell

the specification of which is attached hereto unless box (a) or (b) is checked, in which case
(a) [ ] the specification was filed on _____ as Application No. _____.
(b) [ ] the specification was filed as PCT International Application No. PCT/FI00/00553 filed on 20 June 2000 and was amended under PCT Art. 19 on _____ (if any).

I hereby state that I have reviewed and understand the contents of the above-identified specification, including the claims, as amended by any amendment referred to above.

I acknowledge the duty to disclose to the Patent and Trademark Office all information known to me to be material to patentability as defined in Title 37, Code of Federal Regulations, Sec. 1.56.

I have identified below any foreign application(s) for patent or inventor's certificate or any PCT international application(s) designating at least one country other than the United States of America and filed less than 12 months (6 months for designs) prior to this United States application and of which I claim foreign priority benefits under Title 35, United States Code, Sec. 119, and I have also identified below any foreign application(s) for patent or inventor's certificate or any PCT international application(s) designating at least one country other than the United States of America filed by me on the same subject matter having a filing date before that of the application(s) of which priority is claimed.

EARLIEST FOREIGN APPLICATION, AND ALL FOREIGN APPLICATIONS FILED MORE THAN 12 MONTHS (6 MONTHS FOR DESIGN) PRIOR TO THIS U.S. APPLICATION

Country	Application No.	Date of Filing (month/day/year)
Finland	991484	26 June 1999

As a named inventor, I hereby appoint the practitioners associated with **Customer Number 007812** (John Smith-Hill, Reg. No. 27,730 and Daniel J. Bedell, Reg. No. 30,156) to prosecute this application and transact all business in the Patent and Trademark Office connected therewith and in connection with the resulting patent.

Send correspondence to the correspondence address associated with **Customer Number 007812.**

I hereby authorize the practitioners that I have appointed to accept instructions regarding this application and the resulting patent from OUTOKUMPU OYJ.

I hereby declare that all statements made herein of my own knowledge are true and that all statements made on information and belief are believed to be true; and further that these statements were made with the knowledge that willful false statements and the like so made are punishable by fine or imprisonment, or both under Title 18, United States Code, Sec. 1001, and that such willful false statements may jeopardize the validity of the application or any patent issued thereon.

Full name of sole or first joint inventor
SAASTAMOINEN, Eljas

Inventor's signature Eljas Saast

Date _____ Country of Citizenship Finland

Residence Helsinki, Finland

Post Office Address Sotkatie 8 A 4
FIN-00200 Helsinki, Finland

Full name of second joint inventor, if any
FORSS, Mikael

Inventor's signature

Date _____ Country of Citizenship Finland

Residence Espoo, Finland

Post Office Address Mäkirinne 3 B
FIN-02360 Espoo, Finland

Smith-Hill and Bedell, P.C.

PATENT AND TRADEMARK LAWYERS

12670 NW Barnes Rd., Suite 104
Portland, Oregon 97229
Telephone: (503) 574-3100
Facsimile: (503) 574-3197

John Smith-Hill

Daniel J. Bedell

RECEIVED
APR 0 2 2004
PCT SPECIAL
PROGRAMS OFFICE

FACSIMILE COVER SHEET

To: Mike Neas
PCT Legal

Firm: US PATENT AND TRADEMARK OFFICE

Fax: 1-703-305-2919

Your ref: 09/980,439

From: John Smith-Hill

Date: April 2, 2004

Our ref: OUTO 2367

Pages: Cover + 7

PATENT

IN THE UNITED STATES PATENT AND TRADEMARK OFFICE

In re Application of

Eljas SAASTAMOINEN et al

Application No: 09/980,439

Filed: January 4, 2002

For: ARRANGEMENT FOR MEASURING CONCENTRATE FLOW IN CONNECTION WITH FLOTATION CELL

Art Unit: 2856

Examiner: Takisha S. Miller

PETITION FOR CORRECTION OF 371(c) DATE

Mail Stop PCT
COMMISSIONER FOR PATENTS
P.O. Box 1450
Alexandria, Virginia 22313-1450

Sir:

A copy of applicant's Renewed Request for Corrected Filing Receipt/Notification of Error in Notice of Acceptance Mailed 02/22/2002 filed by facsimile on September 4, 2002 is submitted herewith. A copy of applicant's Request for Corrected Filing Receipt and Notification of Error in Notice of Acceptance Mailed 02/22/02, filed by Express Mail on March 7, 2002 as indicated by the accompanying copy of the return postcard received from the Patent and Trademark Office, and copies of the documents submitted with the Request filed March 7, 2002, are submitted herewith. Based on these items, it is requested that the records of the Patent and Trademark Office be amended to reflect a 371(c) date of January 4, 2002 and that a corrected filing receipt and a corrected 371 Acceptance Letter should be issued. Since this application has been allowed, please handle correction of the 371 date on an expedited basis.

Respectfully submitted,

John Smith-Hill
Reg. No. 27,730

SMITH-HILL AND BEDELL, P.C.
12670 N.W. Barnes Road, Suite 104
Portland, Oregon 97220

Tel: (503) 574-3100
Fax: (503) 574-3197
Docket: OUTO 2367

Certificate of Facsimile Transmission

I hereby certify that this paper is being facsimile transmitted to the Patent and Trademark Office on the date shown below.

John Smith Hill

4/2/04
Date

PATENT

IN THE UNITED STATES PATENT AND TRADEMARK OFFICE

In re Application of

Eljas SAASTAMOINEN et al

Art Unit: 2856

Application No: 09/980,439

Examiner:
Takisha S. Miller

Filed: January 4, 2002

For: ARRANGEMENT FOR MEASURING CONCENTRATE FLOW IN CONNECTION WITH FLOTATION CELL

RENEWED REQUEST FOR CORRECTED FILING RECEIPT
NOTIFICATION OF ERROR IN NOTICE OF ACCEPTANCE MAILED 02/22/2002

Box PCT
Assistant Commissioner for Patents
Washington, D.C. 20231

Sir:

A copy of applicant's Request for Corrected Filing Receipt and Notification of Error in Notice of Acceptance Mailed 02/22/02, filed by Express Mail on March 7, 2002 as indicated by the accompanying copy of the return postcard received from the Patent and Trademark Office, and copies of the documents submitted with the Request filed March 7, 2002, are submitted herewith. Based on these items, it is requested that the records of the Patent and Trademark Office be amended to reflect a filing date of January 4, 2002 and that a corrected filing receipt and a corrected 371 Acceptance Letter should be issued.

Respectfully submitted,

John Smith-Hill
Reg. No. 27,730

SMITH-HILL AND BEDELL, P.C.
12670 N.W. Barnes Road, Suite 104
Portland, Oregon 97220

Tel: (503) 574-3100
Fax: (503) 574-3197
Docket: OUTO 2367

Certificate of Facsimile Transmission

I hereby certify that this paper is being facsimile transmitted to the Patent and Trademark Office on the date shown below.

John Smith-Hill

September 6, 2002
Date

COPY

Attorney Docket No. OUTO 2367
Express Mail
Label No. EL888470241
Deposit Date 3/7/02

IN THE UNITED STATES PATENT AND TRADEMARK OFFICE

In re Application of

Eljas SAASTAMOINEN et al

Art Unit: 2856

Application No: 09/980,439

Examiner:

Filed: January 4, 2002

For: ARRANGEMENT FOR MEASURING CONCENTRATE FLOW IN CONNECTION WITH FLOTATION CELL

REQUEST FOR CORRECTED FILING RECEIPT
NOTIFICATION OF ERROR IN NOTICE OF ACCEPTANCE MAILED 02/22/02

Assistant Commissioner for Patents
Office of Initial Patent Examination
Customer Service Center
Washington, D.C. 20231

Sir:

There is an error on the filing receipt that was issued for this application in that the filing date is incorrect, as indicated in red on the accompanying copy. As outlined in the Reply to Notification of Missing Requirements filed January 31, 2002 (a copy of which is enclosed), the Declaration was filed on January 4, 2002, and a copy of the return postcard was provided as evidence. Therefore, applicant believes that this application should be granted a filing date of January 4, 2002 because January 4, 2002 is the date on which the requirements for entry into the national phase were fully met. Please amend the records of the Patent and Trademark Office to reflect a filing date of January 4, 2002 and issue a corrected filing receipt and a corrected Notice of Acceptance.

Respectfully submitted,

John Smith-Hill
Reg. No. 27,730

SMITH-HILL AND BEDELL, P.C.
12670 N.W. Barnes Road, Suite 104
Portland, Oregon 97220

Tel: (503) 574-3100
Fax: (503) 574-3197

COPY

UNITED STATES PATENT AND TRADEMARK OFFICE

COMMISSIONER FOR PATENTS
UNITED STATES PATENT AND TRADEMARK OFFICE
WASHINGTON, D.C. 20231
www.uspto.gov

APPLICATION NUMBER	FILING DATE	GRP ART UNIT	FIL FEE REC'D	ATTY.DOCKET.NO	DRAWINGS	TOT CLAIMS	IND CLAIMS
09/980,439	~~01/31/2002~~ 01/04/2002	2856	1170	OUTO 2367	2	9	1

CONFIRMATION NO. 3399

FILING RECEIPT

OC000000007491826

007812
SMITH-HILL AND BEDELL
12670 N W BARNES ROAD
SUITE 104
PORTLAND, OR 97229

RECEIVED
MAR - 4 2002

Date Mailed: 02/22/2002

Receipt is acknowledged of this nonprovisional Patent Application. It will be considered in its order and you will be notified as to the results of the examination. Be sure to provide the U.S. APPLICATION NUMBER, FILING DATE, NAME OF APPLICANT, and TITLE OF INVENTION when inquiring about this application. Fees transmitted by check or draft are subject to collection. Please verify the accuracy of the data presented on this receipt. If an error is noted on this Filing Receipt, please write to the Office of Initial Patent Examination's Customer Service Center. Please provide a copy of this Filing Receipt with the changes noted thereon. If you received a "Notice to File Missing Parts" for this application, please submit any corrections to this Filing Receipt with your reply to the Notice. When the USPTO processes the reply to the Notice, the USPTO will generate another Filing Receipt incorporating the requested corrections (if appropriate).

Applicant(s)

Eljas Saastamoinen, Helsinki, FINLAND;
Mikael Forss, Espoo, FINLAND;

Domestic Priority data as claimed by applicant

THIS APPLICATION IS A 371 OF PCT/FI00/00553 06/20/2000

Foreign Applications

FINLAND 991484 06/26/1999

Projected Publication Date: Not Applicable, filed prior to November 29,2000

Non-Publication Request: No

Early Publication Request: No

Title

Arrangement for measuring concentrate flow in connection with a flotation cell

Preliminary Class

073

Re Application Of: Eljas SAASTAMOINEN et al
Application Number: 09/980,439
Filing Date: January 4, 2002
Title: ARRANGEMENT FOR MEASURING CONCENTRATE FLOW IN CONNECTION WITH FLOTATION CELL
Docket Number: OUTO 2367

Receipt is hereby acknowledged in the United States Patent and Trademark Office of the following as of the date stamped hereon:

Request for Corrected Filing Receipt/Notification of Error in Notice of acceptance Mailed 02/22/02
Copy of Filing Receipt
Copy of Reply to Notification of Missing Requirements
Copy of Postcard

OIPE JC16
MAR 0 7 2002
PATENT & TRADEMARK OFFICE

COPY

Attorney Docket No. OUTO 2367
Express Mail
Label No. EL888470564
Deposit Date 1/31/02

IN THE UNITED STATES PATENT AND TRADEMARK OFFICE

In re Application of

Eljas SAASTAMOINEN et al

Application No: 09/980,439

Filed: January 4, 2002

For: FLOTATION CELL

Art Unit:

Examiner:

REPLY TO NOTIFICATION OF MISSING REQUIREMENTS

Assistant Commissioner for Patents
Box PCT
Washington, D.C. 20231

Sir:

In reply to the Notice mailed January 18, 2002, a Declaration signed by the inventor(s) and identifying the application by International application number was filed on January 4, 2002, as evidenced by the enclosed copy of the return postcard. A copy of the Declaration is enclosed. A copy of the Notice is also enclosed. As indicated in the transmittal letter that accompanied the Declaration, the fee under 37 CFR 1.492(e) has already been paid.

Respectfully submitted,

John Smith-Hill
Reg. No. 27,730

SMITH-HILL & BEDELL, P.C.
12670 NW Barnes Road, Suite 104
Portland, Oregon 97229
(503) 574-3100

Re Application Of: Eljas SAASTAMOINEN et al
Application Number: 09/980,439
Filing Date:
Title: FLOTATION CELL

Docket Number: OUTO 2367
Receipt is hereby acknowledged in the United States Patent and Trademark Office of the following as of the date stamped hereon:

Transmittal of Declaration
Declaration

JC10 Rec'd PCT/PTO 04 JAN 2002

30 MAR 2004

UNITED STATES PATENT AND TRADEMARK OFFICE

COMMISSIONER FOR PATENTS
UNITED STATES PATENT AND TRADEMARK OFFICE
P.O. BOX 1450
ALEXANDRIA, VA 22313-1450
www.uspto.gov

SMITH-HILL AND BEDELL
12670 N W BARNES ROAD
SUITE 104
PORTLAND, OR 97229

In re Application of	:	
KIVISTO, Tuomo, et al.	:	
U.S. Application No.: 09/980,440	:	
PCT No.: PCT/FI00/00482	:	DECISION ON
Int. Filing Date: 30 May 2000	:	
Priority Date: 17 June 1999	:	PETITION
Attorney's Docket No.: OUTO 2366	:	
For: ARRANGEMENT FOR TREATING	:	UNDER 37 CFR 1.181
SOLIDS SETTLED ON THE BOTTOM	:	
OF AN ELECTROLYTIC TANK	:	

This decision is in response to applicants' "Request For Corrected Filing Receipt,"filed in the United States Patent and Trademark Office on 28 October 2000.

BACKGROUND

On 30 May 2000, applicants filed international application PCT/FI00/00482, which claimed a priority date of 17 June 1999. A demand for international preliminary examination was filed 27 December 2000, prior to the expiration of nineteen months from the priority date. A copy of the international application was communicated to the United States Patent and Trademark Office by the International Bureau on 28 December 2000. The deadline for entry into the national stage in the United States was thirty months from the priority date, or 17 December 2001.

On 29 November 2001, applicants filed a transmittal letter for entry into the national stage in the United States accompanied by, *inter alia*, the basic national fee.

On 04 January 2002, applicants filed a letter entitled "Transmittal of Declaration," and a declaration of the inventors.

On 30 January 2001, the Office mailed a Notification of Missing Requirements Under 35 U.S.C. 371, indicating, *inter alia*, that an oath or declaration of the inventors in compliance with 37 CFR 1.497(a)-(b) was required.

On 15 February 2002, applicants filed a response to the Notification of Missing Requirements, attaching a copy of the postcard receipt indicating the declaration had been filed on 15 May 2001 and submitted a copy of the declaration.

On 08 March 2002, the Office mailed Notification of Acceptance (Form PCT/DO/EO/903) giving the application the date 15 February 2002 for the date of receipt for both the 35 U.S.C. §371(c)(1), (c)(2), and (c)(4) requirements and for all of the 35 U.S.C. §371 requirements.

On 28 October 2003, applicants filed the instant petition seeking a corrected Notification of Acceptance.

On 16 March 2004, applicants submitted a copy of the 28 October 2003 submission, via facsimile.

DISCUSSION

Those requirements of 35 U.S.C. §371(c) are, in part, submission of (1) the national fee; (2) a copy of the international application; and (4) an oath or declaration of the inventor.

The record reflects that on 28 December 2000, the Office received (2) the international application; that on 29 November 2001, the Office received, (1) the national fee and that on 04 January 2002, the Office received a declaration of the inventors.

The Notification of Acceptance (Form PCT/DO/EO/903) lists the receipt date of the 35 U.S.C. 371(c)(1),(c)(2) and (c)(4) requirements and the date of completing all of the 35 U.S.C. 371 requirements as 15 February 2002. However, as discussed above, the §371(c)(1), (c)(2) and (c)(4) requirements were met on 04 January 2002.

CONCLUSION

For the above reasons, applicants' petition under 37 CFR 1.181 is **GRANTED**.

The Notification of Acceptance (Form PCT/DO/EO/903) mailed 08 March 2002 is **VACATED**.

This application is being forwarded to the National Stage Processing Branch of the Office of PCT Operations for further processing in accordance with this decision, including the mailing of a new Notification of Acceptance (Form PCT/DO/EO/903) and filing receipt. The receipt date of the 35 U.S.C. 371(c)(1),(c)(2) and (c)(4) requirements is 04 January 2002.

Erin M. Pender

Erin M. Pender
Attorney Advisor
PCT Legal Office

Telephone: (703) 305-0455
Facsimile: (703) 308-6459

0 4 NOV 2003

#10

UNITED STATES PATENT AND TRADEMARK OFFICE

COMMISSIONER FOR PATENTS
UNITED STATES PATENT AND TRADEMARK OFFICE
P.O. BOX 1450
ALEXANDRIA, VA 22313-1450
www.uspto.gov

Oliff & Berridge, PLC
P.O. Box 19928
Alexandria, VA 22320

In re Application of KOPF	:	
U.S. Application No.: 09/980,458	:	
PCT Application No.: PCT/EP00/05203	:	DECISION
Int. Filing Date: 07 June 2000	:	
Priority Date Claimed: 11 June 1999	:	
Attorney Docket No.: 111363	:	
For:	:	

This is in response to applicant's "Small Entity Assertion and Request for Refund" filed 04 March 2002.

BACKGROUND

On 07 June 2000, applicant filed international application PCT/EP00/05203, which claimed priority of an earlier United States application filed 11 June 1999. A Demand for international preliminary examination, in which the United States was elected, was filed on 03 January 2001, prior to the expiration of nineteen months from the priority date. Accordingly, the thirty-month period for paying the basic national fee in the United States expired on 11 December 2001.

On 04 December 2001, applicant filed national staged papers in the United States Designated/Elected Office (DO/EO/US). The submission included, *inter alia*, the basic national fee required under 35 U.S.C. 371.

On 04 March 2002, applicant filed the present request for refund.

DISCUSSION

37 CFR 1.28(a) states in relevant part,

> A refund pursuant to § 1.26, based on establishment of small entity status, of a portion of fees timely paid in full prior to establishing status as a small entity may only be obtained if an assertion under § 1.27(c) and a request for a

> refund of the excess amount are filed within three months of the date of the timely payment of the full fee. The three-month time period is not extendable under § 1.136. Status as a small entity is waived for any fee by the failure to establish the status prior to paying, at the time of paying, or within three months of the date of payment of, the full fee.

In the present case, timely payment of the $890.00 basic national fee was made on 04 December 2001. Therefore, a request for refund must be filed by 04 March 2003 to satisfy the provisions of 37 CFR 1.28(a). The present request for refund was timely filed.

CONCLUSION

For the reasons above, the request for refund under 37 CFR 1.28 is GRANTED.

This application is being returned to the United States Designated/Elected Office (DO/EO/US) for further processing in accordance with this decision, including refunding $445.00 of the basic national fee to Deposit Account No. 15-0461 and forwarding the application to the examining group thereafter.

Bryan Tung
PCT Legal Examiner
PCT Legal Office

Telephone: 703-308-6614
Facsimile: 703-308-6459

10 MAR 2003
UNITED STATES PATENT AND TRADEMARK OFFICE

#6

COMMISSIONER FOR PATENTS
UNITED STATES PATENT AND TRADEMARK OFFICE
WASHINGTON, D.C. 20231
www.uspto.gov

Oliff & Berridge, PLC
P.O. Box 19928
Alexandria, VA 22320

In re Application of KOPF	:	
U.S. Application No.: 09/980,458	:	
Int. Application No.: PCT/EP00/05203	:	DECISION
Int. Filing Date: 07 June 2000	:	
Priority Date: 11 June 1999	:	
Attorney Docket No.: 111363	:	
For: OPTICAL SYSTEM FOR LASERS	:	

This is in response to applicant's "Resubmission of Response to Notification of Missing Requirements" filed 07 March 2003, which is being treated as a petition under 37 CFR 1.181. No petition fee is due.

BACKGROUND

On 07 June 2000, applicant filed international application PCT/EP00/05203, which claimed priority of an earlier United States application filed 11 June 1999. A copy of the international application was communicated to the USPTO from the International Bureau on 21 December 2000. A Demand for international preliminary examination, in which the United States was elected, was filed on 03 January 2001, prior to the expiration of nineteen months from the priority date. Accordingly, the thirty-month period for paying the basic national fee in the United States expired at midnight on 11 December 2001.

On 04 December 2001, applicant filed national stage papers in the United States Designated/Elected Office (DO/EO/US). The submission was accompanied by, *inter alia*, the basic national fee required by 35 U.S.C. 371(c)(1).

On 28 January 2002, the DO/EO/US mailed a Notification of Missing Requirements Under 35 U.S.C. 371 (Form PCT/DO/EO/905), which indicated that an oath or declaration in compliance with 37 CFR 1.497 must be filed.

On 07 March 2003, applicant filed the present petition under 37 CFR 1.181, including a copy of a declaration purportedly filed on 25 February 2002.

DISCUSSION

The evidence of record is sufficient to establish that the declaration was originally filed on 25 February 2002. Specifically, the copy of the return postcard, which includes a declaration in its itemized contents and which bears a USPTO date stamp of 25 February 2002, serves as *prima facie* evidence that the declaration was received by the USPTO on 25 February 2002.

CONCLUSION

For the reasons above, the petition under 37 CFR 1.181 is GRANTED.

The application has an International Filing Date of 07 June 2000 and a date under 35 U.S.C. 371 of 25 February 2002.

This application is being forwarded to the United States Designated/Elected Office (DO/EO/US) for further processing in accordance with this decision.

Bryan Tung
PCT Legal Examiner
PCT Legal Office

Telephone: 703-308-6614
Facsimile: 703-308-6459

0 3 DEC 2002
UNITED STATES PATENT AND TRADEMARK OFFICE

COMMISSIONER FOR PATENTS
UNITED STATES PATENT AND TRADEMARK OFFICE
WASHINGTON, D.C. 20231
www.uspto.gov

Jeffrey D. Myers
Peacock, Myers & Adams P.C.
Post Office Box 26927
Albuquerque, New Mexico 87125-6927

In re Application of VELLEKOOP et al. Application No.: 09/980,462 PCT No.: PCT/NL00/00371 Int. Filing Date: 30 May 2000 Priority Date: 31 May 1999 Attorney Docket No.: 30893-1059 For: APPARATUS FOR MEASURING A SMALL QUANTITY OF A LIQUID	: : : : : : : :	DECISION ON PAPERS UNDER 37 CFR 1.42

This is a response to the declaration filed 19 July 2002, which is being treated as a request under 37 CFR 1.42. A four-month extension of time fee ($720) has been charged to Deposit Account no. 13-4213. No petition fee is required.

BACKGROUND

On 30 May 2000, applicants filed international application PCT/NL00/00371, which claimed a priority date of 31 May 1999. A copy of the international application was communicated to the United States Patent and Trademark Office from the International Bureau on 07 December 2000. A proper Demand was filed with the International Preliminary Examining Authority electing the United States. The election was made prior to the expiration of nineteen months from the priority date. As a result, the deadline for payment of the basic national fee was extended to expire on 31 November 2001.

On 30 November 2001, applicants filed a transmittal letter for entry into the national stage in the United States accompanied, inter alia, by: the basic national fee and a preliminary amendment.

On 24 January 2002, the United States Designated/Elected Office (DO/EO/US) mailed a Notification of Missing Requirements under 35 U.S.C. 371 (Form PCT/DO/EO/905) indicating that oath or declaration executed by the inventor and an English translation of the international application was required. The notification set a TWO (2) MONTH period for response.

On 19 July 2002, applicants filed a declaration/power of attorney executed by: Michael Johannes Vellekoop and Kari Tapani Hjelt as inventors; and Garrit Yho Warries on behalf of deceased inventor Gerrit Wijand Lubking.

12/05/2002 GHAJARRO 00000012 134213 09980462
01 FC:2254 720.00 OP

DISCUSSION

37 CFR 1.42 *When the Inventor is Dead,* states, in part:

> In case of the death of the inventor, the legal representative (executor, administrator, etc.) of the deceased inventor may make the necessary oath or declaration, and apply for and obtain the patent.

The declaration filed 19 July 2002 is executed by Garrit Yho Warries as the "'executor" of the deceased inventor. The declaration is acceptable under 37 CFR 1.42 and complies with 37 CFR 1.497(a)-(b). Accordingly, the requirements for entry into national stage under 35 U.S.C. 371(c) were completed as of 19 July 2002.

CONCLUSION

The papers filed under 37 CFR 1.42 are ACCEPTED.

The application has an international filing date of 30 May 2000, under 35 U.S.C. 363, and a 35 U.S.C. 371(c) date of **19 July 2002**.

This application is being forwarded to the National Stage Processing Branch of the International Division for continued national stage processing.

Anthony Smith

Anthony Smith
Attorney-Advisor
Office of PCT Legal Administration
Tel: (703) 308-6314
Fax: (703) 308-6459

11 OCT 2002

UNITED STATES PATENT AND TRADEMARK OFFICE

COMMISSIONER FOR PATENTS
UNITED STATES PATENT AND TRADEMARK OFFICE
WASHINGTON, D.C. 20231
www.uspto.gov

Schlumberger Technology Corporation
IP Dept., Well Stimulation
110 Schlumberger Drive, MD1
Sugar Land, TX 77478

In re Application of JOHNSON et al.	:
Application No.: 09/980,463	:
PCT No.: PCT/EP99/03946	:
Int. Filing: 03 June 1999	:
Priority Date: None	: DECISION ON PETITION
Attorney Docket No.: 55.0206PCT	: UNDER 37 CFR 1.47(a)
For: SHEAR-SENSITIVE PLUGGING FLUID FOR PLUGGING AND A METHOD FOR PLUGGING A SUBTERRANEAN FORMATION ZONE	:

This is a decision on applicant's petition under 37 CFR 1.47(a) along with a request for a three month extension of time, filed in the United States Patent and Trademark Office (USPTO) on 17 June 2002. The petition fee and extension of time fees were paid.

BACKGROUND

On 03 June 1999, applicant filed international application No. PCT/EP99/03946 which did not make a claim for priority. A copy of the international application was communicated to the United States Patent and Trademark Office from the International Bureau on 14 December 2000.

A Demand for international preliminary examination, in which the United States was elected, was filed prior to the expiration of nineteen months from the priority date. Accordingly. the thirty-month period for paying the basic national fee in the United States expired at midnight on 03 January 2002.

On 29 November 2001, applicant filed a transmittal letter (PTO-1390) requesting entry into the national stage in the United States of America under 35 U.S.C. § 371. Filed with the Transmittal Letter was, *inter alia*, the requisite basic national fee.

On 08 January 2002, a Notification of Missing Requirements (FORM PCT/DO/EO/905) was mailed to applicant indicating that an oath or declaration of the inventors in compliance with

On 17 June 2002, in response to the Notification of Missing Requirements, applicant filed a petition under 37 CFR 1.47(a) in an attempt to satisfy the requirements of 35 U.S.C. 371(c)(4). The petition requested the acceptance of the application without the signatures of inventors, Kamal Arsanious and Allen R. Toney. Applicant alleges that Kamal Arsanious cannot be found and that Allen R. Toney has indicated he would sign the appropriate forms but has not done so. The petition included the requisite petition fee, a declaration signed by the 37 CFR 1.47(a) applicant, Les Johnson, David Quinn and Patrick Murphy on behalf of Kamal Arsanious and Allen R. Toney and a statement of facts under 37 CFR 1.47(a). Applicant also requested a three month extension of time, which is granted.

DISCUSSION

A petition under 37 CFR §1.47(a) must be accompanied by (1) the fee under 37 CFR §1.17(h), (2) factual proof that the non-signing joint inventor(s) refuses to execute the application or cannot be reached after diligent effort, (3) a statement of the last known address of the non-signing inventor(s), and (4) an oath or declaration by each available joint inventor on his or her own behalf and on behalf of the non-signing joint inventor(s).

Item (1) is satisfied with the payment of the $130 petition fee. With regard to item (4), the declaration was executed by the available joint inventors on their behalf and on behalf of the non-signing inventors and satisfies the requirements of 37 CFR 1.47(a). Item (3) is satisfied because the last known addresses of non-signing inventors, Kamal Arsanious and Allen R. Toney was provided.

With respect to item (2), Section 409.03(d) of the Manual of Patent Examining Procedure (MPEP), Proof of Unavailability or Refusal, states, in part:

> Where inability to find or reach a nonsigning inventor "after diligent effort" is the reason for filing under 37 CFR 1.47, a statement of facts should be submitted that fully describes the exact facts which are relied on to establish that a diligent effort was made.
>
> The fact that a nonsigning inventor is on vacation or out of town and is therefore temporarily unavailable to sign the declaration is <u>not</u> an acceptable reason for filing under 37 CFR 1.47.
>
> ....
>
> The statement of facts must be signed, where at all possible, by a person having firsthand knowledge of the facts recited therein. Statements based on hearsay will not normally be accepted. Copies of documentary evidence such as internet searches, certified mail return receipts, cover letters of instructions, telegrams, that support a finding that the nonsigning inventor could not be found or reached should be made part of the statement. The steps taken to locate the whereabouts of the nonsigning inventor should be included statement of facts. It is important that the statement contain facts as opposed to conclusions.

> ...A copy of the application papers should be sent to the last known address of the nonsigning inventor, or, if the nonsigning inventor is represented by counsel, to the address of the nonsigning inventor's attorney.
>
> ....
>
> Where a refusal of the inventor to sign the application papers is alleged, the circumstances of the presentation of the application papers and of the refusal must be specified in a statement of facts by the person who presented the inventor with the application papers and/or to whom the refusal was made. Statements by a party not present when an oral refusal is made will not be accepted.
>
> Proof that a *bona fide* attempt was made to present a copy of the application papers (specification, including claims, drawings, and oath or declaration) to the nonsigning inventor for signature, but the inventor refused to accept delivery of the papers or expressly stated that the application papers should not be sent, may be sufficient. When there is an express oral refusal, that fact along with the time and place of the refusal must be stated in the statement of facts. When there is an express written refusal, a copy of the document evidencing that refusal must be made part of the statement of facts. The document may be redacted to remove material not related to the inventor's reasons for refusal.
>
> When it is concluded by the 37 CFR 1.47 applicant that a nonsigning inventor's conduct constitutes a refusal, all facts upon which the conclusion is based should be stated in a statement of facts in support of the petition or directly in the petition. If there is documentary evidence to support facts alleged in the petition or any statement of facts, such evidence should be submitted. Whenever a nonsigning inventor gives a reason for refusing to sign the application oath or declaration, that reason should be stated in the petition.

Here, Petitioner submitted a statement of facts under 37 CFR 1.47(a) in the form of a letter signed by Carmen Delgado, dated 05 April 2002, with an attached summary of the actions she performed in an attempt to obtain the signatures of the inventors. Ms. Delgado's letter also references the letters and e-mails she sent to the inventors, which were attached. The letter to inventor Allen R. Toney indicates that assignment forms were sent to the inventor for his signature with no mention of a copy of application papers (specification, including claims, drawings, and oath or declaration) being sent to the nonsigning inventor for signature. In this instance, Mr. Toney signed for the delivered documents as indicated by the postal delivery notice included with the petition. Furthermore, Ms. Delgado states that Mr. Toney indicated to her that he will sign but has not actually responded to her request to sign the assignment. However, there is no indication that a copy of the declaration, along with a copy of the application including specification, claims and drawings, was mailed to Mr. Toney on February 12, 2002 at last known residence, requesting his signature. Under these circumstances, it cannot be concluded that Mr.

Toney refuses to sign the application or is uncooperative.

Likewise, Ms. Delgado's summary indicates that Kamal Arsanious' address has changed and his new address was not found. Ms. Delgado apparently sent "document forms" for this application to joint inventor Les Johnson, who could not forward them to Mr. Arsanious because his address was not known. However, no further attempts to locate Mr. Arsanious are enumerated so as to conclude that he cannot be found. This is insufficient evidence to conclude that applicant/inventor has refused to sign the application or cannot be located.

Petitioner should attempt to determine if the inventor left a forwarding address. There is no documentation that attempts to contact Mr. Arsanious at his last known e-mail address and last known telephone number were made. There were no attempts made using the telephone and the internet to locate Mr. Arsanious' and no inquiries made at Mr. Arsanious' last known place of employment and last known residence to ascertain his current address. Further attempts to contact Mr. Arsanious via telephone, E-mail, his place of employment, etc. should be tried and documented. The steps taken to locate the whereabouts of the nonsigning inventor should be included in a statement of facts. The statement of facts must be signed, where at all possible, by a person having firsthand knowledge of the facts, listing the steps taken to locate the whereabouts of the nonsigning inventor. What is required is that Mr. Arsanious be presented with a copy of all of the national stage application papers (oath and declaration, specification, including claims and drawings) for this application as identified above.

The action taken by petitioner is not sufficient to prove that "a diligent effort" was made to contact the nonsigning inventor. A diligent effort requires more than sending "document forms" to the joint inventor.

In sum, petitioner has not demonstrated that: (1) a *bona fide* attempt was made to present a copy of the application papers for U.S. application 09/980,463 (specification, including claims, drawings, and declaration) to the nonsigning inventors for their signatures, sent to their last known address and (2) Mr. Toney and Mr. Arsanious' refusal to sign, either in writing or by telephone, these documents, their uncooperativeness or their unavailability.

The evidence submitted does not support a finding that the nonsigning inventors refuse to sign the application for the reasons set forth above. Accordingly, it is inappropriate to accord the national stage application status under 37 CFR §1.47(a) at this time.

CONCLUSION

The petition under 37 CFR §1.47(a) is DISMISSED WITHOUT PREJUDICE.

Any reconsideration on the merits of the petition under 37 CFR §1.47(a) must be filed within TWO (2) MONTHS from the mail date of this decision. Any reconsideration request should include a cover letter entitled "Renewed Petition Under 37 CFR §1.47(a)." No petition fee is required. Any further extensions of time available may be obtained under 37 CFR 1.136(a).

Any further correspondence with respect to this matter should be addressed to the Assistant Commissioner for Patents, Box PCT Legal, Washington, D.C. 20231, with the contents of the letter marked to the attention of the PCT Legal Office.

Leonard E. Smith
Legal Examiner
PCT Legal Office

Cynthia M. Kratz
Attorney Advisor
PCT Legal Office

CMK/LES:cmk

Telephone: (703) 306-5467

Kratz, Cynthia

From: Alexander, James
Sent: Tuesday, April 15, 2003 2:27 PM
To: Kratz, Cynthia
Cc: McAskill, Mary Louise
Subject: RE: 09/980,463

This will be in the 05-13-03 issue.

-----Original Message-----
From: Kratz, Cynthia
Sent: Tuesday, April 15, 2003 2:26 PM
To: Alexander, James
Cc: McAskill, Mary Louise
Subject: 09/980,463

Please publish this notice in the OG. Thanks,

Cynthia M. Kratz
Attorney
PCT Legal Office

703-306-5467

OFFICIAL GAZETTE NOTICE

37 CFR 1.47 Notice by Publication

Notice is hereby given of the filing of a national stage application with a petition under 37 CFR 1.47 requesting acceptance of the application without the signature of all inventors. The petition has been granted. A notice has been sent to the last known address of the non-signing inventor. The inventor whose signature is missing (Allen R. Toney) may join in the application by promptly filing an appropriate oath or declaration complying with 37 CFR 1.63. The international application number is PCT/EP99/03946 and was filed on 03 June 1999 in the names of Les Johnson, Kamal Arsanious, David Quinn, Patrick Murphy, and Allen R. Toney for the invention entitled Shear-Sensitive Plugging Fluid for Plugging and A Method for Plugging a Subterranean Formation Zone. The national stage application is assigned number 09/980,463 and has a 35 U.S.C. 371(c) date of 11 December 2002.

PATENTS
ATTORNEY DOCKET NO. 55.0206

I hereby certify that this correspondence is being deposited with the United States Postal Service as first class mail in an envelope addressed to: Assistant Commissioner for Patents, Washington, D.C. 20231,

on December 5, 2002

Yvonne Loftin
(name of person making deposit)

(signature)

IN THE UNITED STATES PATENT AND TRADEMARK OFFICE

IN RE APPLICATION OF: Les Johnson, et al.	§	DOCKET NO.: 55.0206 PCT/US
	§	
SERIAL NO.: 09/980,463	§	GROUP ART UNIT: Unknown
	§	
BASED ON PCT/EP99/03946	§	
FILED: June 3, 1999	§	
TITLE: Shear-Sensitive Plugging Fluid for Plugging and a Method for Plugging a Subterranean Formation Zone	§	EXAMINER: Unknown

RENEWED PETITION UNDER 37 CFR 1.47(a)

Assistant Commissioner for Patents
Attn: Box PCT Legal
Washington, D.C. 20231

Attention: PCT Legal Office

In response to the "DECISION ON PETITION UNDER 37 CFR 1.47(a)" mailed by the Office on October 11, 2002, and in accordance with 37 CFR 1.63, applicants submit a DECLARATION FOR UTILITY OR DESIGN PATENT APPLICATION form, a POWER OF ATTORNEY OR AUTHORIZATION OF AGENT form, and an ASSIGNMENT form executed by inventor Kamal Arsanious.

As was stated in the first Petition, the last applicant, Allen R. Toney, had repeatedly stated that he would sign the forms and then he subsequently had not done so. Attached was a copy of a letter from Ms. Delgado to Mr. Toney, attached to which was an International Recorded Delivery Form that he signed in February, 2002, indicating receipt

of the documents. The undersigned had spoken with Mr. Toney by telephone on two occasions, May 3, 2002, and May 9, 2002, during which he stated that he would sign and send the forms to the undersigned. Ms. Yvonne Loftin, CLA, had spoken with Mr. Toney by telephone on May 22, 2002, at which time he again stated that he would sign and send the forms to the undersigned. The forms have not been received. Mr. Toney's current address is 23 Edgington Ave., Red Deer, Alberta, T4R 2L1, Canada.

In the DECISION of October 11, 2002, the Petition was dismissed with regards to Mr. Toney on the grounds that there was insufficient evidence that he had all the application papers (specification, including claims, drawings and oath or declaration). There are no drawings associated with this application. Attached is a letter, with further attachments, from Ms. Carmen Delgado stating that on two occasions she sent Mr. Toney copies of the application; she sent him copies of the PCT application as filed and the PCT application as published. Note that the address printed on the PCT application as published (WO 00/75481 A1), to which the copies were sent, is identical to his current address, the address at which he recently signed for receipt of the Declaration and Assignment papers. Ms. Delgado's letter also states that the mailing to Mr. Toney of February 12, 2002, for which he signed the receipt, included a copy of the Declaration for his signature, together with a request for the signature and return of the signed forms. The undersigned also states that in his conversations with Mr. Toney, Mr. Toney agreed to sign both the Assignment and the Declaration and to send them to the undersigned.

Accordingly, Mr. Toney is in possession of the application papers and his conduct constitutes a refusal to sign. The signing Applicants respectfully request that they may make the application without the Declaration of Mr. Toney under 37 CFR 1.47(a).

The Assistant Commissioner for Patents is hereby authorized to charge any required fees (or credit any overpayment) to Deposit Account No. 50-2183(55.0206).

Respectfully submitted,

Thomas D. Mitchell

Thomas Mitchell
Reg. No.: 47,800
Agent for Applicants

Date: Dec. 4, 2002

Schlumberger Technology Corporation
IP Dept., Well Services
110 Schlumberger Drive, MD1
Sugar Land, Texas 77478
Ph: (281) 285-4490
Fax: (281) 285-8569

Etudes et Productions Schlumberger
1, rueBecquerel, BP 202
92142 Clamart Cedex, France
Tel +33 1 4537 2253
Fax +33 1 4537 2010

Schlumberger

December 3rd, 2002

To Whom It May Concern:

USSN 09/980,463 Johnson, et al.

US National Phase of PCT/EP99/03946

I confirm that copies of the specification and claims of the present application have been sent to the inventor Allen R. Toney prior to any request for execution of patent application documents, as follows:

1. A copy of the International Application PCT/EP99/03946 as filed was sent to each inventor on June 16th, 1999 with my letter of that date (copy enclosed).
2. A copy of the publication of this application, WO 00/75481 A1, was sent to each inventor on December 28th, 2000 (copy of front page enclosed with note to this effect).

Mr Toney was therefore already in possession of a copy of the specification and claims of the present application when the letters of December 18th, 2001, January 17th, 2002 and February 12th, 2002 were sent to him requesting signature of the application documents.

I also confirm that at least one copy of the declaration for this application has been sent to Mr, Toney. The letter of February 12th, 2002 (copy enclosed) was sent to Mr. Toney by recorded delivery and Mr. Toney signed the receipt for delivery on February 21st, 2002 (copy enclosed). While the February 12th, 2002 letter only refers to assignment forms, a number of documents for signature were enclosed, including a copy of the US declaration document, together with a request for signature and return of the signed forms.

Yours truly,

Carmen Delgado
Patent Administrator

Schlumberger Dowell

T :	JOHNSON Les ARSANIOUS Kamal TONEY Allen R. MURPHY Patrick QUINN David	**Date :**	16 June 1999
Fr m :	Carmen Delgado (Patent Administrator)	**File nb :**	**WO 55.0206**

Subject : New International Patent Application

We are pleased to enclose herewith a copy of the new International patent application, entitled :

"Sh ar-sensitive plugging fluid for plugging and a method for plugging a subterranean formation zone"

filed on ***3 June 1999***, under the number : ***PCT/EP99/03946.***

Please note that new patent application will be published **only 18 months after the filing date**, and therefore should remain **confidential.**

Regards

Carmen

Encl.

Copy INVENTORS 28/12/00
OK

(12) INTERNATIONAL APPLICATION PUBLISHED UNDER THE PATENT COOPERATION TREATY (PCT)

(19) World Intellectual Property Organization
International Bureau

(43) International Publication Date
14 December 2000 (14.12.2000)

PCT

(10) International Publication Number
WO 00/75481 A1

(51) International Patent Classification 7: E21B 33/138, 43/02

(21) International Application Number: PCT/BE00/00046

(22) International Filing Date: [illegible]

(25) Filing Language: [illegible]

(26) Publication Language: English

(71) Applicant (for all designated States except CA, FR, US): SOFITECH N.V. [BE/BE]; Rue de Stalle 142, B-1180 Brussels (BE).

(71) Applicant (for CA only): SCHLUMBERGER CANADA LIMITED [CA/CA]; 24th floor, Monenco Place, 801 6th Avenue, S.W., Calgary, Alberta T2P 3W2 (CA).

(71) Applicant (for FR only): COMPAGNIE DES SERVICES DOWELL SCHLUMBERGER [FR/FR]; 50, avenue Jean-Jaurès, F-92541 Montrouge (FR).

(72) Inventors; and

(75) Inventors/Applicants (for US only): JOHNSON, Les [CA/CA]; Schlumberger Dowell, 11042 84 avenue, Grande Prairie, Alberta T8V 6H2 (CA). ARSANIOUS, Kamal [EG/CA]; Schlumberger Dowell, 11042 84 avenue, Grande Prairie, Alberta T8V 6H2 (CA). TONEY, Allen, R. [CA/CA]; 23 Edgington Avenue, Red Deer, Alberta T4R 2L1 (CA). QUINN, David [GB/FR]; 3, rue Alexis Carrel, F-75015 Paris (FR). MURPHY, Patrick [CA/CA]; Schlumberger Dowell, 11042 84 Avenue, Grande Prairie, Alberta T8V 6H2 (CA).

(74) Agent: [illegible]; Direction de Productions Schlumberger Dowell, 26, rue de la Cavée, Boîte postale 202, F-92142 Clamart Cedex (FR).

(81) Designated States (national): AE, AL, AM, AT, AU, AZ, BA, BB, BG, BR, BY, CA, CH, CN, CU, CZ, DE, DK, EE, ES, FI, GB, GD, GE, GH, GM, HR, HU, ID, IL, IN, IS, JP, KE, KG, KP, KR, KZ, LC, LK, LR, LS, LT, LU, LV, MD, MG, MK, MN, MW, MX, NO, NZ, PL, PT, RO, RU, SD, SE, SG, SI, SK, SL, TJ, TM, TR, TT, UA, UG, US, UZ, VN, YU, ZA, ZW.

(84) Designated States (regional): ARIPO patent (GH, GM, KE, LS, MW, SD, SL, SZ, UG, ZW), Eurasian patent (AM, AZ, BY, KG, KZ, MD, RU, TJ, TM), European patent (AT, BE, CH, CY, DE, DK, ES, FI, FR, GB, GR, IE, IT, LU, MC, NL, PT, SE), OAPI patent (BF, BJ, CF, CG, CI, CM, GA, GN, GW, ML, MR, NE, SN, TD, TG).

Published:
— With international search report.

For two-letter codes and other abbreviations, refer to the "Guidance Notes on Codes and Abbreviations" appearing at the beginning of each regular issue of the PCT Gazette.

(54) Title: SHEAR-SENSITIVE PLUGGING FLUID FOR PLUGGING AND A METHOD FOR PLUGGING A SUBTERRANEAN FORMATION ZONE

(57) Abstract: A plugging fluid for plugging a subterranean formation zone surrounding a drill hole consisting of an emulsion comprising an oil phase containing an oil, an emulsifier and 2.4 to 4 kg of cement per liter of oil and an aqueous phase containing water and 12-16g of polysaccharide per liter of water, wherein the oil to water volume ratio ranges from 20:80 to 25:75. Upon shearing, the emulsion inverts so that the rupture of the emulsion droplets releases the cement into the water phase thus providing metallic divalent ion to crosslink with the polysaccharides and forming a gel structure.

WO 00/75481 A1

CONFIRMATION COPY

SRPC

Etudes et Productions Schlumberger
1, rue Henri Becquerel
B.P. 202
92142 Clamart Cedex - France
Tel +33 (0)1 45 37 20 00
Fax +33 (0)1 46 31 38 20

Schlumberger

Allen R. TONEY
23 Edgington Avenue,
Red Deer,
Alberta, T4R 2L1
CANADA

RECOMMANDE AVEC AR

Clamart, February 12, 2002

Object : National Phase of **PCT/EP99/03946 of June, 3rd, 1999**.
Title : **Shear-sensitive plugging fluid for plugging and a method for plugging a subterranean formation zone.**
Our Ref. : **55.0206 Brazil, Canada, Norway, Indonesia and USA**

Dear Allen,

We have sent to you on 18 December 2001 and then on 17 January 2002 assignment forms for signature in order to complete our filings in Brazil, Canada, Norway, Indonesia and US. We have not received any documents signed yet. Please find enclosed new original forms for the above listed countries that we would be be grateful if you would sign and witness and return forms to us by express mail.

We need to file this forms urgently.

Thank you very much for your cooperation.

Best Regards

Carmen DELGADO
Intellectual Property Law Department

Encl. **Brazil, Canada, Norway, Indonesia and USA Forms**

16 APR 2003
UNITED STATES PATENT AND TRADEMARK OFFICE

COMMISSIONER FOR PATENT
UNITED STATES PATENT AND TRADEMARK OFFIC
WASHINGTON, D.C. 20231
www.uspto.go

Schlumberger Technology Corporation
IP Dept., Well Stimulation
110 Schlumberger Drive, MD1
Sugar Land, TX 77478

In re Application of JOHNSON et al.	:
Application No.: 09/980,463	:
PCT No.: PCT/EP99/03946	:
Int. Filing: 03 June 1999	:
Priority Date: None	: DECISION ON PETITION
Attorney Docket No.: 55.0206PCT	: UNDER 37 CFR 1.47(a)
For: SHEAR-SENSITIVE PLUGGING FLUID FOR PLUGGING AND A METHOD FOR PLUGGING A SUBTERRANEAN FORMATION ZONE	:

This is a decision on applicant's renewed petition under 37 CFR 1.47(a), filed in the United States Patent and Trademark Office (USPTO) on 11 December 2002.

BACKGROUND

On 17 June 2002, in response to the Notification of Missing Requirements mailed on 08 January 2002, applicant filed a petition under 37 CFR 1.47(a) in an attempt to satisfy the requirements of 35 U.S.C. 371(c)(4). The petition requested the acceptance of the application without the signatures of inventors, Kamal Arsanious and Allen R. Toney. The petition included the requisite petition fee, a declaration signed by the 37 CFR 1.47(a) applicant, Les Johnson, David Quinn and Patrick Murphy on behalf of Kamal Arsanious and Allen R. Toney and a statement of facts under 37 CFR 1.47(a).

On 11 October 2002, a decision dismissing the petition was mailed to applicant indicating that applicant had not provided sufficient factual proof that the non-signing joint inventors refused to execute the application or could not be reached after diligent effort. On 11 December 2002, applicant filed the instant renewed petition accompanied by a declaration executed by previous nonsigning inventor Kamal Arsanious. Applicant continues to alleges that Allen R. Toney is uncooperative and that his conduct constitutes a refusal to sign.

DISCUSSION

A petition under 37 CFR §1.47(a) must be accompanied by (1) the fee under 37 CFR §1.17(h), (2) factual proof that the non-signing joint inventor(s) refuses to execute the application or cannot be reached after diligent effort, (3) a statement of the last known address of the non-signing inventor(s), and (4) an oath or declaration by each available joint inventor on his or her own behalf and on behalf of the non-signing joint inventor(s).

Items (1), (3) and (4) have been previously satisfied. With regard to Item (2), when it is concluded by the 37 CFR 1.47 applicant that a nonsigning inventor's conduct constitutes a refusal, all facts upon which the conclusion is based should be stated in a statement of facts in support of the petition or directly in the petition. If there is documentary evidence to support facts alleged in the petition or any statement of facts, such evidence should be submitted.

With the petition, petitioner provided a statement from Carmen Delgado, dated 03 December 2002, which explains that she sent copies of the specification and claims for the present application to inventor Toney when she sent (1) a copy of the International Application PCT/EP99/03926 on 16 June 1999 and (2) a copy of the publication of this application on 28 December 2000. Ms. Delgado concludes that Mr. Toney was already in possession of a copy of the specification and claims when she sent letters on 18 December 2001, 17 January 2002 and 12 February 2002 "requesting [his] signature on the application documents". Ms. Delgado further confirms that a copy of the declaration was sent to inventor Toney with her letter sent on 12 February 2002. Mr. Toney signed for the documents delivered on 21 February 2002 as indicated by the postal delivery notice included with the petition.

In addition, counsel states that he spoke to Mr. Toney by telephone on two occasions, 03 May and 09 May 2002 at which time Mr. Toney stated that he would sign and send the forms to counsel. As of the date of the petition, these documents were not returned to counsel. Under these circumstances, it can now be concluded that Mr. Toney's conduct and uncooperativeness constitutes his refusal to sign the application.

The evidence submitted now supports a finding that the nonsigning inventor by his conduct refuses to sign the application for the reasons set forth above. Accordingly, it is appropriate to accord the national stage application status under 37 CFR §1.47(a) at this time.

CONCLUSION

The petition under 37 CFR §1.47(a) is **GRANTED**.

The U.S. Designated/Elected Office is authorized to accept the application as a 37 CFR 1.47(a) application using the declarations filed 17 June 2002 and 11 December 2002 and to mail a filing receipt. The application has an international filing date of 03 June 1999 under 35 U.S.C. 363, and a date of 11 December 2002 under 35 U.S.C. 371(c).

As provided in 37 CFR 1.47(a), a notice of the filing of this application will be

forwarded to the non-signing inventor at his last known address of record. Also, a notice of the filing of this application will be published in the Official Gazette.

The application is being returned to the International Division for processing as the U.S. National Stage of the above-identified international application.

Cynthia M. Kratz

Cynthia M. Kratz
Attorney Advisor
PCT Legal Office

CMK:cmk
Telephone: (703) 306-5467

16 APR 2003

UNITED STATES PATENT AND TRADEMARK OFFICE

COMMISSIONER FOR PATENT
UNITED STATES PATENT AND TRADEMARK OFFIC
WASHINGTON, D.C. 20231
www.uspto.go

ALLEN R. TONEY
23 EDGINGTON AVENUE
RED DEER, ALBERTA
T4R 2L1 CANADA

In re Application of JOHNSON et al.	
Application No.: 09/980,463	DECISION ON PETITION
PCT No.: PCT/EP99/03946	
Int. Filing: 03 June 1999	UNDER 37 CFR 1.47(a)
Priority Date: None	
Attorney Docket No.: 55.0206PCT	
For: SHEAR-SENSITIVE PLUGGING FLUID FOR PLUGGING AND A METHOD FOR PLUGGING A SUBTERRANEAN FORMATION ZONE	

Dear Mr. Toney:

You are named as an inventor in the above identified United States patent application, filed under the provisions of 37 CFR 1.47(a) and 35 U.S.C. § 116. Should a patent be granted, you will be designated as an inventor.

As a named inventor, you are entitled to inspect any paper in the file wrapper of the application, order copies of all or any part thereof (at a prepaid cost per 37 CFR 1.19) or to make your position of record in the application. Alternatively, you may arrange to do any of the preceding through a registered patent agent or attorney presenting written authorization from you. If you care to join in the application, counsel of record (see below) would presumably assist you. Joining in the application would entail the filing of an appropriate oath or declaration by you pursuant to 37 CFR 1.63.

Cynthia M. Kratz
Attorney Advisor
PCT Legal Office

Telephone: (703) 306-5467

Schlumberger Technology Corporation
IP Dept., Well Stimulation
110 Schlumberger Drive, MD1
Sugar Land, TX 77478

SCAN! **Please forward case and paper to address shown below.**

SPE RESPONSE FOR CERTIFICATE OF CORRECTION

Paper No.: _____

DATE : 6/13/07

TO SPE OF : ART UNIT 1638

SUBJECT : Request for Certificate of Correction for Appl. No.: 09/980468 Patent No.: 7183458

Please respond to this request for a certificate of correction within 7 days.

Please review the requested changes/corrections as shown in the attached certificate of correction. Please complete this form (see below) and forward it with the file to:

Certificates of Correction Branch (CofC)
South Tower - 9A22
Palm Location 7580

HENRY RANDALL
Certificates of Correction Branch
703-308-9390 ext. _____

Thank You For Your Assistance

The request for issuing the above-identified correction(s) is hereby:

Note your decision on the appropriate box.

- ☑ **Approved** — All changes apply.
- ☐ **Approved in Part** — Specify below which changes do not apply.
- ☐ **Denied** — State the reasons for denial below.

Comments: The changes requested correct errors that occurred when the patent was printed. EM

SPE

1638
Art Unit

UNITED STATES PATENT AND TRADEMARK OFFICE

Commissioner for Patents
United States Patent and Trademark Office
P.O. Box 1450
Alexandria, VA 22313-1450
www.uspto.gov

In re Patent No. 6712165
Issue Date: March 30,2004
Application No. 09980476
Filed: April 9,2002
Attorney Docket No. GOT 148NP

:DECISION GRANTING PETITION
:UNDER 37 CFR 1.378(c)

This is a decision on the electronic petition, filed November 17,2008 ,under 37 CFR 1.378(c) to accept the unintentionally delayed payment of the 3.5 year maintenance fee for the above-identified patent.

The petition is **GRANTED**.

The maintenance fee is accepted, and the above-identified patent reinstated as of November 17,2008 . This decision also constitutes notice that the fee has been accepted. An electronic copy of the petition and this decision has been created as an entry in the Image File Wrapper. Nevertheless, petitioner should print and retain an independent copy.

Telephone inquiries related to this electronic decision should be directed to the Electronic Business Center at 1-866-217-9197.

Approved for use through 04/30/2009. OMB 0651-0016
U.S. Patent and Trademark Office: U.S. DEPARTMENT OF COMMERCE
Under the Paperwork Reduction Act of 1995, no persons are required to respond to a collection of information unless it displays valid OMB control number.

PETITION TO ACCEPT UNINTENTIONALLY DELAYED PAYMENT OF MAINTENANCE FEE IN AN EXPIRED PATENT (37 CFR 1.378(c))

Patent Number	Issue Date (YYYY-MM-DD)	Application Number	Filing Date (YYYY-MM-DD)	Docket Number (if applicable)
6,712,165	2004-03-30	09/980,476	2002-04-09	GOT 148NP

CAUTION: Maintenance fee (and surcharge, if any) payment must correctly identify: (1) the patent number and (2) the application number of the actual U.S. application leading to issuance of that patent to ensure the fee(s) is/are associated with the correct patent. 37 CFR 1.366(c) and (d).

SMALL ENTITY
☐ Patentee claims, or has previously claimed, small entity status. See 37 CFR 1.27.

LOSS OF ENTITLEMENT TO SMALL ENTITY STATUS
☐ Patentee is no longer entitled to small entity status. See 37 CFR 1.27(g)

NOT Small Entity		Small Entity	
Fee	Code	Fee	Code
◉ 3 ½ year	(1551)	○ 3 ½ year	(2551)
○ 7 ½ year	(1552)	○ 7 ½ year	(2552)
○ 11 ½ year	(1553)	○ 11 ½ year	(2553)

SURCHARGE
The surcharge required by 37 CFR 1.20(i)(2) (Fee Code 1558) must be paid as a condition of accepting unintentionally delayed payment of the maintenance fee.

MAINTENANCE FEE (37 CFR 1.20(e)-(g))
The appropriate maintenance fee must be submitted with this petition.

STATEMENT
THE UNDERSIGNED CERTIFIES THAT THE DELAY IN PAYMENT OF THE MAINTENANCE FEE TO THIS PATENT WAS UNINTENTIONAL

PETITIONER(S) REQUEST THAT THE DELAYED PAYMENT OF THE MAINTENANCE FEE BE ACCEPTED AND THE PATENT REINSTATED

THIS PORTION MUST BE COMPLETED BY THE SIGNATORY OR SIGNATORIES

37 CFR 1.378(d) states: "Any petition under this section must be signed by an attorney or agent registered to practice before the Patent and Trademark Office, or by the patentee, the assignee, or other party in interest."

I certify, in accordance with 37 CFR 1.4(d)(4) that I am

◉ An attorney or agent registered to practice before the Patent and Trademark Office

○ A sole patentee

○ A joint patentee; I certify that I am authorized to sign this submission on behalf of all the other patentees.

○ A joint patentee; all of whom are signing this e-petition

○ The assignee of record of the entire interest

Patent Practitioner			
A signature of the applicant or representative is required in accordance with 37 CFR 1.33 and 10.18. Please see 37 CFR 1.4(d) for the form of the signature			
Signature	/Robert H. Berdo, Jr./	Date (YYYY-MM-DD)	2008-11-17
Name	Robert H. Berdo, Jr.	Registration Number	38075

This collection of information is required by 37 CFR 1.378(c). The information is required to obtain or retain a benefit by the public which is to file (and by the USPTO to process) an application. Confidentiality is governed by 35 U.S.C. 122 and 37 CFR 1.11 and 1.14. This collection is estimated to take 1 hour to complete, including gathering, preparing, and submitting the completed application form to the USPTO. Time will vary depending upon the individual case. Any comments on the amount of time you require to complete this form and/ or suggestions for reducing this burden, should be sent to the Chief Information Officer, U.S. Patent and Trademark Office, U.S. Department of Commerce, P.O. Box 1450, Alexandria, VA 22313-1450. DO NOT SEND FEES OR COMPLETED FORMS TO THIS ADDRESS. **This form can only be used when in conjunction with EFS-Web. If this form is mailed to the USPTO, it may cause delays in reinstating the patent.**

Privacy Act Statement

The Privacy Act of 1974 (P.L. 93-579) requires that you be given certain information in connection with your submission of the attached form related to a patent application or patent. Accordingly, pursuant to the requirements of the Act, please be advised that: (1) the general authority for the collection of this information is 35 U.S.C. 2(b)(2); (2) furnishing of the information solicited is voluntary; and (3) the principal purpose for which the information is used by the U.S. Patent and Trademark Office is to process and/or examine your submission related to a patent application or patent. If you do not furnish the requested information, the U.S. Patent and Trademark Office may not be able to process and/or examine your submission, which may result in termination of proceedings or abandonment of the application or expiration of the patent.

The information provided by you in this form will be subject to the following routine uses:

1. The information on this form will be treated confidentially to the extent allowed under the Freedom of Information Act (5 U.S.C. 552) and the Privacy Act (5 U.S.C. 552a). Records from this system of records may be disclosed to the Department of Justice to determine whether the Freedom of Information Act requires disclosure of these record s.

2. A record from this system of records may be disclosed, as a routine use, in the course of presenting evidence to a court, magistrate, or administrative tribunal, including disclosures to opposing counsel in the course of settlement negotiations.

3. A record in this system of records may be disclosed, as a routine use, to a Member of Congress submitting a request involving an individual, to whom the record pertains, when the individual has requested assistance from the Member with respect to the subject matter of the record.

4. A record in this system of records may be disclosed, as a routine use, to a contractor of the Agency having need for the information in order to perform a contract. Recipients of information shall be required to comply with the requirements of the Privacy Act of 1974, as amended, pursuant to 5 U.S.C. 552a(m).

5. A record related to an International Application filed under the Patent Cooperation Treaty in this system of records may be disclosed, as a routine use, to the International Bureau of the World Intellectual Property Organization, pursuant to the Patent Cooperation Treaty.

6. A record in this system of records may be disclosed, as a routine use, to another federal agency for purposes of National Security review (35 U.S.C. 181) and for review pursuant to the Atomic Energy Act (42 U.S.C. 218(c)).

7. A record from this system of records may be disclosed, as a routine use, to the Administrator, General Services, or his/her designee, during an inspection of records conducted by GSA as part of that agency's responsibility to recommend improvements in records management practices and programs, under authority of 44 U.S.C. 2904 and 2906. Such disclosure shall be made in accordance with the GSA regulations governing inspection of records for this purpose, and any other relevant (i.e., GSA or Commerce) directive. Such disclosure shall not be used to make determinations about individuals.

8. A record from this system of records may be disclosed, as a routine use, to the public after either publication of the application pursuant to 35 U.S.C. 122(b) or issuance of a patent pursuant to 35 U.S.C. 151. Further, a record may be disclosed, subject to the limitations of 37 CFR 1.14, as a routine use, to the public if the record was filed in an application which became abandoned or in which the proceedings were terminated and which application is referenced by either a published application, an application open to public inspections or an issued patent.

9. A record from this system of records may be disclosed, as a routine use, to a Federal, State, or local law enforcement agency, if the USPTO becomes aware of a violation or potential violation of law or regulation.

UNITED STATES PATENT AND TRADEMARK OFFICE

UNITED STATES DEPARTMENT OF COMMERCE
United States Patent and Trademark Office
Address: COMMISSIONER FOR PATENTS
P.O. Box 1450
Alexandria, Virginia 22313-1450
www.uspto.gov

YOUNG & THOMPSON
209 Madison Street
Suite 500
Alexandria, VA 22314

Mail Date: 04/20/2010

Applicant	: Jacques Alexandre Hatzfeld	: DECISION ON REQUEST FOR
Patent Number	: 7601534	: RECALCULATION of PATENT
Issue Date	: 10/13/2009	: TERM ADJUSTMENT IN VIEW
Appliction No	: 09/980,484	: OF WYETH AND NOTICE OF INTENT TO
Filed	: 03/25/2002	: ISSUE CERTIFICATE OF CORRECTION
		:

The Request for Recalculation is **GRANTED** to the extent indicated.

The patent term adjustment has been determined to be **1161** days. The USPTO will *sua sponte* issue a certificate of correction reflecting the amount of PTA days determined by the recalculation.

Prior to the issuance of the certificate of correction, the USPTO will afford patentee an opportunity to be heard and request reconsideration. Accordingly, patentee has **one month or thirty (30) days**, whichever is longer, to file a request for reconsideration of this patent term adjustment calculation. See 35 U.S.C. 154(b)(3)(B)(ii) and 37 CFR 1.322(a)(4). No extensions of time will be granted under 37 CFR 1.136.

Patentee should use document code PET.OP if electronically filing a request for reconsideration of this patent term adjustment calculation. The patentee must also include the information required by 37 CFR 1.705(b)(2) and the fee required by 37 CFR 1.18(e). If patentee does not file a timely request for reconsideration of this patent term adjustment calculation including the information required by 37 CFR 1.705(b)(2) and the fee required by 37 CFR 1.18(e), the USPTO will issue a certificate of correction reflecting the PTA determination noted above.

Patentee should be aware that in order to preserve the right to review in the United States District Court for the District of Columbia of the USPTO patent term adjustment determination, patentee must ensure that he or she also take the steps required under 35 U.S.C. 154(b)(4)(A) in a timely manner. Nothing in the request for recalculation should be construed as providing an alternative time frame for commencing a civil action under 35 U.S.C. 154(b)(4)(A).

Any questions concerning this decision should be directed to the Office of Patent Legal Administration at 571-272-7702.

UNITED STATES PATENT AND TRADEMARK OFFICE

APR 2 6 2

COMMISSIONER FOR PATENTS
UNITED STATES PATENT AND TRADEMARK OFFICE
WASHINGTON, D.C. 20231
www.uspto.gov

Stevens, Davis, Miller & Mosher, LLP
1615 L Street, NW
Suite 850
Washington, DC 20036

In re Application of UEHARA, Toshiyuki et al. Application No.: 09/980,490 PCT No.: PCT/JP00/03529 Int. Filing Date: 01 June 2000 Priority Date: 04 June 1999 Attorney's Docket No.: L8494.01101 For: ALUMINUM-ALLOY THERMAL EXCHANGER	DECISION ON PETITION UNDER 37 CFR 1.181

This is a decision on applicants' "Petition Under MPEP 710.06," filed with the Office on 12 March 2002. This has been treated as a petition under 37 CFR 1.181. No petition fee is due.

BACKGROUND

On 01 June 2000, applicants filed international application PCT/JP00/03529, which claimed a priority date of 04 June 1999. A copy of the international application was transmitted to the United States Patent and Trademark Office (USPTO) on 14 December 2000. On 01 November 2001, a demand for international preliminary examination was filed, prior to the expiration of nineteen months from the priority date. As such, the deadline for entry into the national stage in the United States was thirty months from the priority date, or 04 December 2001.

On 04 December 2001, applicants filed a transmittal letter for entry into the national stage in the United States, accompanied by, *inter alia*, the basic national fee.

On 31 January 2002, the Office mailed a Notification of Missing Requirements (Form PCT/DO/EO/905), indicating, *inter alia*, that an oath or declaration of the inventors in compliance with 37 CFR 1.497(a)-(b) and the surcharge for filing the oath or declaration after thirty months were required. The Notification set a two month extendable period for reply.

On 12 March 2002, applicants filed the instant petition requesting that the Office reset the time period for reply so that it starts on the date when the correspondence was received by the applicant, instead of on the mail date.

DISCUSSION

A petition to reset the time period for reply must be (1) timely filed, (2) demonstrate significant delay, (3) present evidence, (4) state when the communication was received and (5) be signed.

Items (1)-(5) have been met. Applicants filed the petition on the day the communication was received. Of the two month period for reply, more than a month had elapsed. Applicants have provided the communication with the law office's receipt stamp on it and state that the communication was received on that date. Finally, the petition is signed by a practitioner registered to practice before the Office.

CONCLUSION

For the above reasons, applicants' petition under 37 CFR 1.181 is **GRANTED**.

The period for reply is reset to begin on 12 March 2002 and expire on 12 May 2002.

This application is being forwarded to the National Stage Processing Division of the Office of the PCT Operations for continued processing in accordance with this decision.

Leonard E. Smith
PCT Legal Examiner
PCT Legal Administration

Erin M. Pender
Attorney Advisor
PCT Legal Administration

Telephone: (703) 305-0455
Facsimile: (703) 308-6459

UNITED STATES PATENT AND TRADEMARK OFFICE

Commissioner for Patents
United States Patent and Trademark Office
P.O. Box 1450
Alexandria, VA 22313-1450
www.uspto.gov

In re Patent No. 6548626
Issue Date: April 15,2003
Application No. 09980522
Filed: December 3,2001
Attorney Docket No. 50034

:

:DECISION GRANTING PETITION
:UNDER 37 CFR 1.378(c)

:

This is a decision on the electronic petition, filed November 6,2007 ,under 37 CFR 1.378(c) to accept the unintentionally delayed payment of the 3.5 year maintenance fee for the above-identified patent.

The petition is GRANTED.

The maintenance fee is accepted, and the above-identified patent reinstated as of November 6,2007 . This decision also constitutes notice that the fee has been accepted. An electronic copy of the petition and this decision has been created as an entry in an Image File Wrapper. Nevertheless, petitioner should print and retain an independent copy

Telephone inquires related to this electronic decision should be directed to the Electronic Business Center at 1-866-217-9197.

Under the Paperwork Reduction Act of 1995, no persons are required to respond to a collection of information unless it displays valid OMB control number.

PETITION TO ACCEPT UNINTENTIONALLY DELAYED PAYMENT OF MAINTENANCE FEE IN AN EXPIRED PATENT (37 CFR 1.378(c))

Patent Number	Issue Date (YYYY-MM-DD)	Application Number	Filing Date (YYYY-MM-DD)	Docket Number (if applicable)
6548626	2003-04-15	09980522	2001-12-03	50034

CAUTION: Maintenance fee (and surcharge, if any) payment must correctly identify: (1) the patent number and (2) the application number of the actual U.S. application leading to issuance of that patent to ensure the fee(s) is/are associated with the correct patent. 37 CFR 1.366(c) and (d).

SMALL ENTITY
☐ Patentee claims, or has previously claimed, small entity status. See 37 CFR 1.27.

LOSS OF ENTITLEMENT TO SMALL ENTITY STATUS
☐ Patentee is no longer entitled to small entity status. See 37 CFR 1.27(g)

NOT Small Entity		Small Entity	
Fee	Code	Fee	Code
◉ 3 ½ year	(1551)	○ 3 ½ year	(2551)
○ 7 ½ year	(1552)	○ 7 ½ year	(2552)
○ 11 ½ year	(1553)	○ 11 ½ year	(2553)

SURCHARGE
The surcharge required by 37 CFR 1.20(i)(2) (Fee Code 1558) must be paid as a condition of accepting unintentionally delayed payment of the maintenance fee.

MAINTENANCE FEE (37 CFR 1.20(e)-(g))
The appropriate maintenance fee must be submitted with this petition.

STATEMENT
THE UNDERSIGNED CERTIFIES THAT THE DELAY IN PAYMENT OF THE MAINTENANCE FEE TO THIS PATENT WAS UNINTENTIONAL

PETITIONER(S) REQUEST THAT THE DELAYED PAYMENT OF THE MAINTENANCE FEE BE ACCEPTED AND THE PATENT REINSTATED

THIS PORTION MUST BE COMPLETED BY THE SIGNATORY OR SIGNATORIES

37 CFR 1.378(d) states: "Any petition under this section must be signed by an attorney or agent registered to practice before the Patent and Trademark Office, or by the patentee, the assignee, or other party in interest."

I certify, in accordance with 37 CFR 1.4(d)(4) that I am

◉ An attorney or agent registered to practice before the Patent and Trademark Office

○ A sole patentee

○ A joint patentee; I certify that I am authorized to sign this submission on behalf of all the other patentees.

○ A joint patentee; all of whom are signing this e-petition

○ The assignee of record of the entire interest

Patent Practitioner			
A signature of the applicant or representative is required in accordance with 37 CFR 1.33 and 10.18. Please see 37 CFR 1.4(d) for the form of the signature			
Signature	/Kendal M. Sheets/	Date (YYYY-MM-DD)	2007-11-06
Name	Kendal M. Sheets	Registration Number	47077

This collection of information is required by 37 CFR 1.378(c). The information is required to obtain or retain a benefit by the public which is to file (and by the USPTO to process) an application. Confidentiality is governed by 35 U.S.C. 122 and 37 CFR 1.11 and 1.14. This collection is estimated to take 1 hour to complete, including gathering, preparing, and submitting the completed application form to the USPTO. Time will vary depending upon the individual case. Any comments on the amount of time you require to complete this form and/ or suggestions for reducing this burden, should be sent to the Chief Information Officer, U.S. Patent and Trademark Office, U.S. Department of Commerce, P.O. Box 1450, Alexandria, VA 22313-1450. DO NOT SEND FEES OR COMPLETED FORMS TO THIS ADDRESS. **This form can only be used when in conjunction with EFS-Web. If this form is mailed to the USPTO, it may cause delays in reinstating the patent.**

Privacy Act Statement

The Privacy Act of 1974 (P.L. 93-579) requires that you be given certain information in connection with your submission of the attached form related to a patent application or patent. Accordingly, pursuant to the requirements of the Act, please be advised that: (1) the general authority for the collection of this information is 35 U.S.C. 2(b)(2); (2) furnishing of the information solicited is voluntary; and (3) the principal purpose for which the information is used by the U.S. Patent and Trademark Office is to process and/or examine your submission related to a patent application or patent. If you do not furnish the requested information, the U.S. Patent and Trademark Office may not be able to process and/or examine your submission, which may result in termination of proceedings or abandonment of the application or expiration of the patent.

The information provided by you in this form will be subject to the following routine uses:

1. The information on this form will be treated confidentially to the extent allowed under the Freedom of Information Act (5 U.S.C. 552) and the Privacy Act (5 U.S.C. 552a). Records from this system of records may be disclosed to the Department of Justice to determine whether the Freedom of Information Act requires disclosure of these record s.

2. A record from this system of records may be disclosed, as a routine use, in the course of presenting evidence to a court, magistrate, or administrative tribunal, including disclosures to opposing counsel in the course of settlement negotiations.

3. A record in this system of records may be disclosed, as a routine use, to a Member of Congress submitting a request involving an individual, to whom the record pertains, when the individual has requested assistance from the Member with respect to the subject matter of the record.

4. A record in this system of records may be disclosed, as a routine use, to a contractor of the Agency having need for the information in order to perform a contract. Recipients of information shall be required to comply with the requirements of the Privacy Act of 1974, as amended, pursuant to 5 U.S.C. 552a(m).

5. A record related to an International Application filed under the Patent Cooperation Treaty in this system of records may be disclosed, as a routine use, to the International Bureau of the World Intellectual Property Organization, pursuant to the Patent Cooperation Treaty.

6. A record in this system of records may be disclosed, as a routine use, to another federal agency for purposes of National Security review (35 U.S.C. 181) and for review pursuant to the Atomic Energy Act (42 U.S.C. 218(c)).

7. A record from this system of records may be disclosed, as a routine use, to the Administrator, General Services, or his/her designee, during an inspection of records conducted by GSA as part of that agency's responsibility to recommend improvements in records management practices and programs, under authority of 44 U.S.C. 2904 and 2906. Such disclosure shall be made in accordance with the GSA regulations governing inspection of records for this purpose, and any other relevant (i.e., GSA or Commerce) directive. Such disclosure shall not be used to make determinations about individuals.

8. A record from this system of records may be disclosed, as a routine use, to the public after either publication of the application pursuant to 35 U.S.C. 122(b) or issuance of a patent pursuant to 35 U.S.C. 151. Further, a record may be disclosed, subject to the limitations of 37 CFR 1.14, as a routine use, to the public if the record was filed in an application which became abandoned or in which the proceedings were terminated and which application is referenced by either a published application, an application open to public inspections or an issued patent.

9. A record from this system of records may be disclosed, as a routine use, to a Federal, State, or local law enforcement agency, if the USPTO becomes aware of a violation or potential violation of law or regulation.

UNITED STATES PATENT AND TRADEMARK OFFICE

COMMISSIONER FOR PATENTS
UNITED STATES PATENT AND TRADEMARK OFFICE
P.O. BOX 1450
ALEXANDRIA, VA 22313-1450
www.uspto.gov

Paper No. 12

HEIMBECHER & ASSOCIATES, LLC.
200 UNION BLVD
SUITE 316
LAKEWOOD, CO 80228-1831

COPY MAILED

MAR 24 2004

OFFICE OF PETITIONS

In re Application of	:
Rampp	: DECISION NOTING JOINDER
Application No. 09/980,527	: OF INVENTOR AND PETITION
Filed: April 29, 2002	: UNDER 37 CFR 1.47(a) MOOT
Atty. Dkt. No.: 5873US.04	:

This decision is in response to the alternative petition under 37 C.F.R. § 1.47(b)," filed February 20, 2004.

The petition under 37 C.F.R. § 1.47(b) is hereby **DISMISSED AS MOOT**.

A petition under 37 C.F.R. § 1.47 is appropriate in instances for which an inventor or the legal representative of an inventor is unavailable or refuses to execute an oath or declaration. An executed declaration was submitted April 29, 2002 in response to the Missing Requirements Notice mailed February 28, 2002. The declaration lacked a power of attorney, as indicated by the examiner in an Office action mailed August 22, 2003. The Office acknowledges receipt of the executed power of attorney submitted herewith.

Applicant indicates that Matthias Dorn is the legal representative of legally incapacitated inventor Erwin Rampp. The Office no longer requires proof of authority of the legal representative of a deceased or incapacitated inventor. Although the Office does not require proof of authority to be filed, any person acting as a legal representative of a deceased or incapacitated inventor should ensure that he or she is properly acting in such a capacity. The Office is relying on counsel's duty of good faith and candor in accepting that inventor Erwin Rampp is legally incapacitated and lawfully represented by Matthias Dorn.

This application is being forwarded to Technology Center 3700 for further processing.

Telephone inquiries related to this decision may be directed to the undersigned at (703) 305-0310.

Alesia M. Brown
Senior Petitions Attorney
Office of Petitions

MAR 2 2 2002

UNITED STATES PATENT AND TRADEMARK OFFICE

COMMISSIONER FOR PATENTS
UNITED STATES PATENT AND TRADEMARK OFFICE
WASHINGTON, D.C. 20231
www.uspto.gov

A. Blair Hughes
McDonnell Boehnen Hulbert & Berghoff
300 S. Wacker Drive, Suite 3200
Chicago, IL 60606

In re Application of JEFF A. ZABLOCKI et al. Serial No.: 09/980,533 PCT No.: PCT/US00/32721 Int. Filing Date: 01 December 2000 Priority Date: 03 December 1999 Attorney's Docket No.: 99,913-X For: PARTIAL OR FULL A1AGONISTS -N6 HETEROCYCLIC 5' THIO SUBSTITUTED ADENOSINE DERIVATIVES	DECISION ON PETITION UNDER 37 CFR 1.137(b) and 37 CFR 1.182

This is a decision on applicant's "Petition under 37 CFR 1.137(b)" filed in the United States Patent and Trademark Office (USPTO) on 01 November 2001. On 19 February 2002, at the request of the undersigned, applicant also filed a request to correct the International application number which appeared on the transmittal letter filed 01 November 2001 in the above identified patent application.

BACKGROUND

On 01 December 2000, applicant filed international application No. PCT/US00/32721 with the United States Receiving Office, which claimed priority to 03 December 1999. On 29 June 2001, a Demand was filed, extending the deadline for entry into the national stage to 30 months or to 03 June 2002.

On 01 November 2001, applicant filed a Transmittal Letter requesting entry into the national stage incorrectly identified PCT application number PCT/US01/32721, rather than PCT/US00/32721. The request was assigned application no. 09/980,533. A Patent Data Sheet accompanied the papers. Applicant also filed the instant petition to revive under 37 CFR 1.137(b) which identified PCT/US00/32721.

On 19 February 2002, applicant filed a request to correct the international application number as identified on the transmittal letter, which is treated as a petition under 37 CFR 1.182. The request, in effect, asks for correction of the international application number in the 01 November 2001 transmittal letter from PCT/US01/32721 to PCT/US00/32721. Applicant also filed a replacement page 1 of the transmittal letter.

DISCUSSION

As explained at Section 1893.03(a) of the Manual of Patent Examining Procedure (MPEP), any intended filing of an international application as a national stage application must clearly and unambiguously be identified as such and must satisfy all of the conditions set forth in 35 U.S.C. 371(c). The official PTO Notice published in the Official Gazette at 1077 OG 13 entitled "Minimum Requirements for Acceptance of Applications Under 35 U.S.C. 371 (the National Stage of PCT)" states, in part, the following:

> The Patent and Trademark Office is continuing to receive application papers which do not clearly identify whether the papers (1) are being submitted to enter the national stage of the Patent Cooperation Treaty (PCT) under 35 U.S.C. 371 or (2) are being filed as a regular national application under 35 U.S.C. 111.
>
> * * *
>
> If there are any conflicting instructions as to which sections of the statute (371 or 111) is intended the application will be accepted under 35 U.S.C. 111.

On 01 November 2001, applicant filed a Transmittal Letter to the United States Designated/Elected Office Concerning A Filing under 35 U.S.C. 371 (Form PTO-1390) In an accompanying paper entitled "Patent Data Sheet", applicant made reference to "continuation of PCT/US00/32721, Filing Date 01 December 2000". Applicant did not provide the basic national fee for entry into the national stage in the USPTO. Therefore, due to the conflicting instructions, the papers filed on 01 November 2001 are considered a U.S. application under 35 U.S.C. 111(a).

The transmittal letter, at issue herein, was filed on 01 November 2001 with the DO/EO/US, within the thirty month time limit under Article 39(1)(a) (which time limit expired after midnight of 03 June 2002) and as such is acceptable under Article 31. The continuation application of PCT/US00/32721 will be considered as having been filed on 01 November 2001.

Applicant's petition to revive and request to correct the international application number on the request for entry into the U.S. national stage in PCT/US00/32721 are considered moot as the payment of the basic national fee for entry into the U.S. national stage is not required since the application is considered to have been filed under 35 U.S.C. 111(a). Therefore, the petition fee of $620 will be refunded to applicant.

Applicant is entitled to claim benefit under 35 U.S.C. 120 and 365(c) of the filing date of the international application for the common subject matter, since this application (Serial No. 09/980,533) and the international application (PCT/US00/32721) designating the United States were copending on 01 November 2001. In order to obtain benefit of the earlier international application, applicant must amend the beginning of the specification of this application by inserting a proper reference to the parent international application with the statement: "The present application is a continuation of international application PCT/US00/32721, filed 01 December 2000."

CONCLUSION

For the reasons above, applicants' submission on 01 November 2001 will be treated as an application filed under 35 U.S.C. 111(a), with a filing date of 01 November 2001. Applicant's petition to revive and request to correct the international application number on the request for entry into the U.S. national stage in PCT/US00/32721, originally filed with the DO/EO/US on 01 November 2001 is considered **MOOT**.

Applicant's deposit account has been credited the petition to revive fee of $620.

This application is being forwarded to Office of Initial Preliminary Examination (OIPE) for further processing. The application will then be forwarded to Art Unit 1614.

Richard R. Cole
Legal Examiner
PCT Legal Office

Cynthia M. Kratz
Attorney Advisor
PCT Legal Office

CMK/RRC:cmk

Telephone: (703) 306-5467

UNITED STATES PATENT AND TRADEMARK OFFICE

COMMISSIONER FOR PATENT
UNITED STATES PATENT AND TRADEMARK OFFIC
WASHINGTON, D.C. 20231
www.uspto.go

01 AUG 2003

A. Blair Hughes
McDonnell Boehnen Hulbert & Berghoff
300 S. Wacker Drive, Suite 3200
Chicago, IL 60606

In re Application of JEFF A. ZABLOCKI et al. Serial No.: 09/980,533 PCT No.: PCT/US00/32721 Int. Filing Date: 01 December 2000 Priority Date: 03 December 1999 Attorney's Docket No.: 99,913-X For: PARTIAL OR FULL A1AGONISTS -N6 HETEROCYCLIC 5' THIO SUBSTITUTED ADENOSINE DERIVATIVES	COMMUNICATION

This application is before the PCT Legal Office for consideration of matters arising under 35 U.S.C. 371.

On 22 March 2002, a decision on applicant's petition under 37 CFR 1.137(b) and 1.182 was mailed, indicating that the application would be treated as a filing under 35 U.S.C. 111(a).

However, on February 2003, a Notification of Missing Requirements (FORM PCT/DO/EO/905) was inadvertently mailed to applicants. The Notification of Missing Requirements is hereby **VACATED**.

This application is being forwarded to Office of Initial Patent Examination (OIPE) for further processing as an application under 35 U.S.C. 111(a).

Cynthia M. Kratz

Cynthia M. Kratz
Attorney Advisor
PCT Legal Office

Telephone: (703) 306-5467
Facsimile: (703) 308-6459

0 4 SEP 2002

UNITED STATES PATENT AND TRADEMARK OFFICE

COMMISSIONER FOR PATENTS
UNITED STATES PATENT AND TRADEMARK OFFICE
WASHINGTON, D.C. 20231
www.uspto.gov

PEARNE & GORDON LLP
526 Superior Avenue East
Suite 1200
Cleveland, OH 44114-1484

In re Application of HAGA, Hideo *et al* U.S. Application No.: 09/980,535 PCT No.: PCT/JP01/01367 Int. Filing Date: 23 February 2001 Priority Date: 25 February 2000 Attorney's Docket No.: 34108 For: CARD HOLDING STRUCTURE AND PORTABLE TERMINAL APPARATUS HAVING THE SAME	:	**DECISION**

This is a decision on the "Letter" filed on 31 May 2002 which has been treated as a petition to reset a time period and the declaration and postcard receipt submitted via facsimile on 18 July 2002 which have been treated as a petition under 37 CFR 1.181. There is no charge for either petition.

BACKGROUND

On 25 January 2002, the United States Designated/Elected Office (DO/EO/US) mailed a Notification of Missing Requirements under 35 U.S.C. 371 indicating *inter alia* that an oath/declaration in compliance with 37 CFR 1.497(a) and (b) was required. A two-month time limit in which to respond was set.

On 13 May 2002, applicants purportedly mailed an executed declaration.

On 31 May 2002, applicants submitted the instant petition which was accompanied by, *inter alia*, a copy of the Notification of Missing Requirements stamped as received on 09 May 2002.

On 18 July 2002, applicants submitted via facsimile a copy of the declaration previously submitted on 13 May 2002 and a copy of the date-stamped postcard receipt.

DISCUSSION

Declaration Submitted 13 May 2002

A review of the above-captioned application file reveals that the declaration filed 13 May 2002 was located in the file. Therefore, no action is required on the papers filed 18 July 2002.

Petition to Reset Time

Section 710.06 of the Manual of Patent Examining Procedures (MPEP) states that the Office will grant a petition to restart the previously set period for reply to an Office action to run from the date of receipt of the Office action at the correspondence address when the following criteria are met:

(A) the petition is filed within two weeks of the date of receipt of the Office action at the correspondence address;

(B) a substantial portion of the set reply period had elapsed on the date of receipt (e.g., at least 1 month of a 2- or 3-month reply period had elapsed); and

(C) the petition includes (1) evidence showing the date of receipt of the Office action at the correspondence address (e.g., a copy of the Office action having the date of receipt of the Office action at the correspondence address stamped thereon, a copy of the envelope (which contained the Office action) having the date of receipt of the Office action at the correspondence address stamped thereon, etc.), and (2) a statement setting forth the date of receipt of the Office action at the correspondence address **and explaining how the evidence being presented establishes the date of receipt of the Office action at the correspondence address**. (Emphasis added).

Applicants claim that the Notification of Missing Requirements mailed 25 January 2002 was not received until 09 May 2002. The instant petition was deposited pursuant to 37 CFR 1.8(a) on 14 May 2002. Thus, item (A) is satisfied.

Item (B) is also satisfied since the two-month period to reply to the Notification of Missing Requirements mailed 25 January 2002 had long expired on 09 May 2002.

Concerning item (C), applicants submitted a copy of the aforementioned Notification of Missing Requirements which is stamped on its face as "RECEIVED MAY 09 2002 PEARNE & GORDON LLP." In the letter, counsel states "that the Notification of Missing Requirements was not received until May 9, 2002."

However, applicants have not met the requirements for a grantable petition. Applicants have not satisfactorily explained how mail is received and docketed in the law firm and why the stamped copy of the Notification of Missing Requirements alone establishes the date of receipt of the Office action at counsel's law firm.

Therefore, item (C) above is not yet satisfied.

Accordingly, applicants have not met all of the requirements to restart the time period on the Notification of Missing Requirements mailed 25 January 2002.

CONCLUSION

For the reasons discussed above, applicants' petition to restart the time period is **DISMISSED** without prejudice. In addition, applicants petition under 37 CFR 1.181 is also **DISMISSED** as **MOOT**.

The statutory period that was originally set forth in the Office communication mailed on 25 January 2002 is still operative. A two-month extension fee of $200.00 will be charged to Deposit Account No. 16-0820 as authorized. The $130.00 petition fee will be credited to the same Deposit Account.

If reconsideration on the merits of the petition to restart the time period is desired, a renewed petition must be filed within **TWO (2) MONTHS** from the mail date of this decision. Any reconsideration request should include a cover letter entitled "Renewed Petition to Restart Time Period."

The declaration submitted 13 May 2002 is in compliance with 37 CFR 1.497.

Applicants have completed the requirements for acceptance under 35 U.S.C. 371(c). The application has an international filing date of 23 February 2001, under 35 U.S.C. 363, and a 35 U.S.C. 371 date of **13 May 2002**.

This application is being forwarded to the National Stage Processing Division of the Office of PCT Operations for continued processing. Any further correspondence with respect to this matter should be addressed to the Assistant Commissioner for Patents, Box PCT, Washington, D.C. 20231, with the contents of the letter marked to the attention of the PCT Legal Office.

Boris Milef
PCT Legal Examiner
PCT Legal Office

James Thomson
Attorney Advisor
PCT Legal Office

Tel.: (703) 308-6457

UNITED STATES PATENT AND TRADEMARK OFFICE

#8

COMMISSIONER FOR PATENTS
UNITED STATES PATENT AND TRADEMARK OFFICE
WASHINGTON, D.C. 20231
www.uspto.gov

David A. Cherry
Woodcock Washburn LLP
One Liberty Place
Philadelphia, PA 19103

In re Application of
APPLEYARD, Richard
Application No.: 09/980,562
PCT No.: PCT/AU00/00420
Int. Filing Date: 05 May 2000
Priority Date: 05 May 1999
Attorney Docket No.: WATE-0011
For: INDUSTRIAL PRESS SAFETY SYSTEM

DECISION ON PETITION

This decision is in response to applicant's "PETITION FOR WITHDRAWAL OF ABANDONMENT" filed on 01 March 2002, which is being treated as a petition under 37 CFR 1.181. No petition fee is required.

BACKGROUND

On 05 May 2000, applicant filed international application no. PCT/AU00/00420 which claimed priority date of 05 May 1999. A copy of the international application was communicated to the United States Patent and Trademark Office from the International Bureau on 16 November 2000. A Demand was filed with the International Preliminary Examination Authority. As a result, the deadline for entry into the national stage in the United States expired 30 months from the priority date, on 05 November 2001.

On 01 November 2001, applicant filed a transmittal letter for entry into the national stage in the United States which was accompanied by, inter alia: the basic national fee; a preliminary amendment; and a copy of the international preliminary examination report.

On 29 January 2002, the United States Elected Office mailed a NOTIFICATION OF ABANDONMENT UNDER 37 CFR 1.495 (Form PCT/DO/EO/909) indicating that the application was abandoned for failure to provide the full U.S. Basic National Fee by 30 months (37 CFR 1.495(b)(2).

On 04 February 2002, applicant filed an executed declaration and power of attorney.

On 01 March 2002, applicant filed present petition to withdraw the holding of abandonment.

DISCUSSION

A review of the application file and present petition reveal that the above identified application is the United States national stage application of PCT/AU00/00420 which claimed priority date of 05 May 1999. A proper Demand, electing the United States, was filed prior to the 19 month from the priority date, in this case, 20 July 2000, and thus the deadline for entry into the national stage of the United States was extended to expire 30 months from the priority date, ie.05 November 2001. On 01 November 2001, applicant filed the appropriate basic national fee. Therefore, the payment of the basic national fee was timely and the Notification of Abandonment was mailed in error.

The $130 petition fee, submitted on 01 March 2002, has been refunded to Deposit Account no. 23-3050.

CONCLUSION

For the reasons above, the request is **GRANTED** and the Notification of Abandonment mailed 29 January 2002 is hereby **VACATED**. The holding of Abandonment is withdrawn.

The application has an international filing date of 05 May 2000 under 35 U.S.C. 363 and a 35 U.S.C. 371(c) date of **04 February 2002**.

This application is being returned to the United States/Designated Elected Office for processing in accordance with this decision.

Anthony Smith
Attorney-Advisor
PCT Legal Office
Tel: (703) 308-6314
Fax: (703) 308-6459

UNITED STATES PATENT AND TRADEMARK OFFICE

COMMISSIONER FOR PATENTS
UNITED STATES PATENT AND TRADEMARK OFFICE
WASHINGTON, D.C. 20231
www.uspto.gov

David A. Cherry
Woodcock Washburn LLP
One Liberty Place
Philadelphia, PA 19103

In re Application of	:	
APPLEYARD, Richard	:	
Application No.: 09/980,562	:	DECISION ON PETITION
PCT No.: PCT/AU00/00420	:	
Int. Filing Date: 05 May 2000	:	
Priority Date: 05 May 1999	:	
Attorney Docket No.: WATE-0011	:	
For: INDUSTRIAL PRESS SAFETY SYSTEM		

This application is before the PCT Legal Office for issues arising under 35 U.S.C. 371.

BACKGROUND

On 05 May 2000, applicant filed international application no. PCT/AU00/00420 which claimed priority date of 05 May 1999. A copy of the international application was communicated to the United States Patent and Trademark Office from the International Bureau on 16 November 2000. A Demand was filed with the International Preliminary Examination Authority. As a result, the deadline for entry into the national stage in the United States expired 30 months from the priority date, on 05 November 2001.

On 01 November 2001, applicant filed a transmittal letter for entry into the national stage in the United States which was accompanied by, inter alia: the basic national fee; a preliminary amendment; and a copy of the international preliminary examination report.

On 29 January 2002, the United States Elected Office mailed a NOTIFICATION OF ABANDONMENT UNDER 37 CFR 1.495 (Form PCT/DO/EO/909) indicating that the application was abandoned for failure to provide the full U.S. Basic National Fee by 30 months (37 CFR 1.495(b)(2).

On 04 February 2002, applicant filed an executed declaration and power of attorney.

On 01 March 2002, applicant filed a petition to withdraw the holding of abandonment under 37 CFR 1.181. In a decision dated 11 April 2002, the PCT Legal Office granted the petition under 37 CFR 1.181 and vacated the Notification of Abandonment.

02 JUL 2002

UNITED STATES PATENT AND TRADEMARK OFFICE

COMMISSIONER FOR PATENTS
UNITED STATES PATENT AND TRADEMARK OFFICE
WASHINGTON, D.C. 20231
www.uspto.gov

David A. Cherry
Woodcock Washburn LLP
One Liberty Place
Philadelphia, PA 19103

In re Application of APPLEYARD, Richard Application No.: 09/980,562 PCT No.: PCT/AU00/00420 Int. Filing Date: 05 May 2000 Priority Date: 05 May 1999 Attorney Docket No.: WATE-0011 For: INDUSTRIAL PRESS SAFETY SYSTEM	:	DECISION ON PETITION UNDER 37 CFR 1.137(b)

The petition to revive under 37 CFR 1.137(b) filed 11 June 2002 in the above-captioned application is hereby **GRANTED** as follows:

Applicant's statement that "the entire delay in filing the required reply from the due date for the reply until the filing of a grantable petition under 37 CFR 1.137(b) was unintentional" meets the requirements of 37 CFR 1.137(b)(3).

A review of the application file reveals that applicant has submitted the basic national fee of $1040 and the requirements of 37 CFR 1.137(b) have been satisfied. Therefore, the request to revive the application abandoned under 35 U.S.C. 371(d) is granted as to the National stage in the United States of America.

This application is being returned to the United States Designated/Elected Office for processing in accordance with this decision.

Anthony Smith

Anthony Smith
Attorney-Advisor
Office of PCT Legal Administration
Telephone: (703) 308-6314
Facsimile: (703) 308-6459

DISCUSSION

The above-identified application was abandoned on 06 November 2001 for failure to pay the full basic national fee 30 months from the priority date for international application no. PCT/AU00/00420. The basic national fee for a large entity whose international search report was conducted by the Australian Patent Office is $1040. (See 37 Code of Federal Regulation 1.492(a)(3)). A review of the finance record reveals that a check in the amount of $970 was included with the Transmittal Letter filed on 01 November 2001, however, an authorization to charge additional fees to the deposit account was not provided. Accordingly, applicant has failed to pay full basic national fee prior to the expiration of the 30th month deadline. Therefore, the Decision mailed 11 April 2002 by the PCT Legal Office was mailed in error and is hereby vacated.

RECOMMENDATION

Applicants may wish to consider filing a petition to the Commissioner under 37 CFR 1.137(a) or (b) requesting that the application be revived. Any petition filed under 37 CFR 1.137(a) and/or a petition under 37 CFR 1.137(b) requesting that the application be revived must meet the criteria indicated in the recent revision of 37 CFR 1.137. This recommendation to file a petition under 37 CFR 1.137(a) or (b) should not be construed as an indication as to whether or not any such petition(s) will be favorably considered.

CONCLUSION

Therefore, the application remains **ABANDONED**.

The Decision dated 11 April 2002 is hereby **VACATED**.

Please direct further correspondence with respect to this matter to the Commissioner of Patents and Trademarks, Box PCT, Washington, D.C. 20231, and address the contents of the letter to the attention of the International Division, Legal Staff.

Leonard Smith
Legal Examiner
PCT Legal Office

Anthony Smith
Attorney-Advisor
PCT Legal Office
(703) 308-6314
(703) 308-6459

UNITED STATES PATENT AND TRADEMARK OFFICE

COMMISSIONER FOR PATEN
UNITED STATES PATENT AND TRADEMARK OFFI
WASHINGTON, D.C. 2023
www.uspto.g

Paper No. 10

George H. Gates
GATES & COOPER LLP
Howard Hughes Center
6701 Center Drive West, Suite 1050
Los Angeles, CA 90045

MAILED

AUG 1 5 2003

Technology Center 2100

In re Application of:	)	
Steve Vestergaard et al.	)	
Application No. 09/980,582	)	**DECISION ON REQUEST FOR**
Filed: November 2, 2001	)	**WITHDRAWAL AS ATTORNEY**
For: DIGITAL MEDIA DISTRIBUTION METHOD AND SYSTEM	)	

This is a decision on the Request To Withdraw from Representation filed June 18, 2003.

A grantable request to withdraw as attorney of record should indicate thereon the present mailing addresses of the attorney(s) who is/are withdrawing from the record and of the applicant. The request for withdrawal must be signed by every attorney seeking to withdraw or contain a clear indication that one attorney is signing on behalf of another/others. A request to withdraw will not be approved unless at least 30 (thirty) days would remain between the date of approval and the later of the expiration date of a time to file a response or the expiration date of the maximum time period which can be extended under 37 C.F.R. § 1. 136(a). The effective date of withdrawal being the date of decision and not the date of request. See M.P.E.P. § 402.06. 37 C.F.R. § 1.36 further requires that the applicant or patent owner be notified of the withdrawal of the attorney or agent.

The request filed June 18, 2003 meets all the requirements. Accordingly the request is **GRANTED**.

All future communications from the Office will be directed to the below-listed address until otherwise notified by applicant. This correspondence address is provided by the withdrawn attorney(s). Applicant is reminded of the obligation to promptly notify the Patent and Trademark Office (Office) of any change in correspondence address to ensure receipt of all communications from the Office.

James R. Matthews

FM Vincent N. Trans
Special Programs Examiner
Technology Center 2100
Computer Architecture and Software
(703) 305-9750

cc: Mr. Steve Vestegaard
DESTINY MEDIA TECHNOLOGIES, INC.
1040 1055 West Hastings
Vancouver, BC, V6E2E9

UNITED STATES PATENT AND TRADEMARK OFFICE

COMMISSIONER FOR PATENTS
UNITED STATES PATENT AND TRADEMARK OFFICE
P.O. BOX 1450
ALEXANDRIA, VA 22313-1450
www.uspto.gov

17 OCT 2006

BIRCH STEWART KOLASCH & BIRCH
PO BOX 747
FALLS CHURCH, VA 22040-0747

In re Application of MIURA et al	:	
U.S. Application No.: 09/980,588	:	
PCT Application No.: PCT/JP01/02844	:	
Int. Filing Date: 30 March 2001	:	DECISION
Priority Date Claimed: 04 April 2000	:	
Attorney Docket No.: 2224-0194P	:	
For: METHOD OF SEPARATING IMIDE	:	
COMPOUNDS	:	

This is in response to applicant's "Petition Under 37 CFR 1.182 to Enter Accurate Translation of PCT Application" filed 10 August 2006.

BACKGROUND

On 30 March 2001, applicant filed international application PCT/JP01/02844, which claimed priority of an earlier Japan application filed 04 April 2000. A copy of the international application was communicated to the USPTO from the International Bureau on 11 October 2001. The twenty-month period for paying the basic national fee in the United States expired on 04 December 2001.

On 04 December 2001, applicant filed national stage papers in the United States Designated/Elected Office (DO/EO/US). The submission was accompanied by, *inter alia*, the basic national fee required by 35 U.S.C. 371(c)(1).

On 22 January 2002, the DO/EO/US mailed a Notice of Acceptance of Application Under 35 U.S.C. 371 (Form PCT/DO/EO/903).

On 10 August 2006, applicant filed the present petition under 37 CFR 1.182 along with the requisite petition fee.

DISCUSSION

The petition states that the English language translation of the international application filed on 04 December 2001 contains certain inaccuracies. The petition further states that the error was made without deceptive intent.

CONCLUSION

The petition under 37 CFR 1.182 is GRANTED.

The Notice of Acceptance of Application Under 35 U.S.C. 371 (Form PCT/DO/EO/903) mailed 22 January 2002 is hereby VACATED.

The application has an International Filing Date under 35 U.S.C. 363 of 30 March 2001, and a date under 35 U.S.C. 371(c)(1), (c)(2), and (c)(4) of 10 August 2006.

This application is being forwarded to the United States Designated/Elected Office (DO/EO/US) for further processing in accordance with this decision, including preparation and mailing of a new Notice of Acceptance of Application Under 35 U.S.C. 371 (Form PCT/DO/EO/903). The application will thereafter be returned to Technology Center 1600.

BryanLin

Bryan Lin
PCT Legal Examiner
PCT Legal Office

Telephone: 571-272-3303
Facsimile: 571-273-0459

MAR 2 5 2002

UNITED STATES PATENT AND TRADEMARK OFFICE

COMMISSIONER FOR PATENTS
UNITED STATES PATENT AND TRADEMARK OFFICE
WASHINGTON, D.C. 20231
www.uspto.gov

BIRCH STEWART KOLASCH & BIRCH
PO BOX 747
FALLS CHURCH VA 22040-0747

In re Application of WILLIAMS Application No.: 09/980,589 PCT No.: PCT/US00/13746 Int. Filing Date: 19 May 2000 Priority Date: 19 May 1999 Attorney Docket No.:0175-0323P For: IMAGE TRANSFER SHEET WITH TRANSFER BLOCKING OVERCOAT AND HEAT TRANSFER PROCESS USING THE SAME	DECISION ON PETITION UNDER 37 CFR 1.137(b)

This decision is in response to applicant's "PETITION FOR REVIVAL OF AN INTERNATIONAL APPLICATION FOR PATENT DESIGNATING THE U.S. ABANDONED UNINTENTIONALLY UNDER 37 C.F.R. § 1.137(b)" filed 04 December 2001.

BACKGROUND

On 19 May 2000, applicants filed international application PCT/US00/13746, which claimed a priority date of 19 May 1999. A copy of the international application was communicated to the United States Patent and Trademark Office (USPTO) from the International Bureau on 23 November 2000. A Demand for international preliminary examination, in which the United States was elected, was filed on 04 December 2000, which was within nineteen months from the priority date. Accordingly, the thirty-month period for paying the basic national fee in the United States expired at midnight on 19 November 2001.

On 04 December 2001, applicants filed a submission for entry into the national stage in the United States which was accompanied by, *inter alia*, the U.S. Basic National Fee, an assertion of small entity status, and the instant "PETITION FOR REVIVAL OF AN INTERNATIONAL APPLICATION FOR PATENT DESIGNATING THE U.S. ABANDONED UNINTENTIONALLY UNDER 37 C.F.R. § 1.137(b)".

DISCUSSION

A petition to revive the present application under 37 CFR 1.137(b) must include:

(1) The required reply;
(2) The petition fee;
(3) A statement that the entire delay in filing the required reply from the due date for the

reply until the filing of a grantable petition was unintentional.

As to item (1), applicants submitted the basic national fee for a small entity on 04 December 2001.

As to item (2), applicants submitted the petition fee for a small entity of $640.00 on 04 December 2001.

With regard to item (3), petitioner has provided the required statement.

A review of the application file reveals that, with the filing of the present petition and accompanying papers, a proper response has been submitted and all of the requirements of 37 CFR 1.137(b) for revival have been satisfied and revival is therefore appropriate.

CONCLUSION

The petition under 37 CFR 1.137(b) is **GRANTED** for the reasons set forth above.

Please direct any further correspondence with respect to this matter to the Commissioner of Patents and Trademarks, Box PCT, Washington, D.C. 20231, and address the contents of the letter to the attention of the Office of PCT Legal Administration.

This application is being forwarded to the National Stage Processing Branch of the Office of PCT Operations to continue national stage processing of the application including preparing and mailing a NOTIFICATION OF MISSING REQUIREMENTS (Form PCT/DO/EO/905) requiring an oath or declaration in compliance with 37 CFR 1.497(a)-(b).

Daniel Stemmer
Legal Examiner
PCT Legal Affairs
Office of Patent Cooperation Treaty
Legal Administration
Telephone: (703) 308-2066
Facsimile: (703) 308-6459

PTO/SB/66 (03-09)
Approved for use through 03/31/2012. OMB 0651-0016
U.S. Patent and Trademark Office: U.S. DEPARTMENT OF COMMERCE
Under the Paperwork Reduction Act of 1995, no persons are required to respond to a collection of information unless it displays valid OMB control number.

PETITION TO ACCEPT UNINTENTIONALLY DELAYED PAYMENT OF MAINTENANCE FEE IN AN EXPIRED PATENT (37 CFR 1.378(c))

Patent Number	Issue Date (YYYY-MM-DD)	Application Number	Filing Date (YYYY-MM-DD)	Docket Number (if applicable)
6849312	2005-02-01	09980589	2002-08-06	181.001

CAUTION: Maintenance fee (and surcharge, if any) payment must correctly identify: (1) the patent number and (2) the application number of the actual U.S. application leading to issuance of that patent to ensure the fee(s) is/are associated with the correct patent. 37 CFR 1.366(c) and (d).

SMALL ENTITY
☐ Patentee claims, or has previously claimed, small entity status. See 37 CFR 1.27.

LOSS OF ENTITLEMENT TO SMALL ENTITY STATUS
☒ Patentee is no longer entitled to small entity status. See 37 CFR 1.27(g)

NOT Small Entity		Small Entity	
Fee	Code	Fee	Code
◉ 3 ½ year	(1551)	○ 3 ½ year	(2551)
○ 7 ½ year	(1552)	○ 7 ½ year	(2552)
○ 11 ½ year	(1553)	○ 11 ½ year	(2553)

SURCHARGE
The surcharge required by 37 CFR 1.20(i)(2) (Fee Code 1558) must be paid as a condition of accepting unintentionally delayed payment of the maintenance fee.

MAINTENANCE FEE (37 CFR 1.20(e)-(g))
The appropriate maintenance fee must be submitted with this petition.

STATEMENT
THE UNDERSIGNED CERTIFIES THAT THE DELAY IN PAYMENT OF THE MAINTENANCE FEE TO THIS PATENT WAS UNINTENTIONAL

PETITIONER(S) REQUEST THAT THE DELAYED PAYMENT OF THE MAINTENANCE FEE BE ACCEPTED AND THE PATENT REINSTATED

THIS PORTION MUST BE COMPLETED BY THE SIGNATORY OR SIGNATORIES

37 CFR 1.378(d) states: "Any petition under this section must be signed by an attorney or agent registered to practice before the Patent and Trademark Office, or by the patentee, the assignee, or other party in interest."

I certify, in accordance with 37 CFR 1.4(d)(4) that I am

◉ An attorney or agent registered to practice before the Patent and Trademark Office

○ A sole patentee

○ A joint patentee; I certify that I am authorized to sign this submission on behalf of all the other patentees.

○ A joint patentee; all of whom are signing this e-petition

○ The assignee of record of the entire interest

Patent Practitioner			
A signature of the applicant or representative is required in accordance with 37 CFR 1.33 and 10.18. Please see 37 CFR 1.4(d) for the form of the signature			
Signature	/Mitchell A. Smolow/	Date (YYYY-MM-DD)	2009-10-19
Name	Mitchell A. Smolow	Registration Number	43140

This collection of information is required by 37 CFR 1.378(c). The information is required to obtain or retain a benefit by the public which is to file (and by the USPTO to process) an application. Confidentiality is governed by 35 U.S.C. 122 and 37 CFR 1.11 and 1.14. This collection is estimated to take 1 hour to complete, including gathering, preparing, and submitting the completed application form to the USPTO. Time will vary depending upon the individual case. Any comments on the amount of time you require to complete this form and/ or suggestions for reducing this burden, should be sent to the Chief Information Officer, U.S. Patent and Trademark Office, U.S. Department of Commerce, P.O. Box 1450, Alexandria, VA 22313-1450. DO NOT SEND FEES OR COMPLETED FORMS TO THIS ADDRESS. **This form can only be used when in conjunction with EFS-Web. If this form is mailed to the USPTO, it may cause delays in reinstating the patent.**

Privacy Act Statement

The Privacy Act of 1974 (P.L. 93-579) requires that you be given certain information in connection with your submission of the attached form related to a patent application or patent. Accordingly, pursuant to the requirements of the Act, please be advised that: (1) the general authority for the collection of this information is 35 U.S.C. 2(b)(2); (2) furnishing of the information solicited is voluntary; and (3) the principal purpose for which the information is used by the U.S. Patent and Trademark Office is to process and/or examine your submission related to a patent application or patent. If you do not furnish the requested information, the U.S. Patent and Trademark Office may not be able to process and/or examine your submission, which may result in termination of proceedings or abandonment of the application or expiration of the patent.

The information provided by you in this form will be subject to the following routine uses:

1. The information on this form will be treated confidentially to the extent allowed under the Freedom of Information Act (5 U.S.C. 552) and the Privacy Act (5 U.S.C. 552a). Records from this system of records may be disclosed to the Department of Justice to determine whether the Freedom of Information Act requires disclosure of these records.

2. A record from this system of records may be disclosed, as a routine use, in the course of presenting evidence to a court, magistrate, or administrative tribunal, including disclosures to opposing counsel in the course of settlement negotiations.

3. A record in this system of records may be disclosed, as a routine use, to a Member of Congress submitting a request involving an individual, to whom the record pertains, when the individual has requested assistance from the Member with respect to the subject matter of the record.

4. A record in this system of records may be disclosed, as a routine use, to a contractor of the Agency having need for the information in order to perform a contract. Recipients of information shall be required to comply with the requirements of the Privacy Act of 1974, as amended, pursuant to 5 U.S.C. 552a(m).

5. A record related to an International Application filed under the Patent Cooperation Treaty in this system of records may be disclosed, as a routine use, to the International Bureau of the World Intellectual Property Organization, pursuant to the Patent Cooperation Treaty.

6. A record in this system of records may be disclosed, as a routine use, to another federal agency for purposes of National Security review (35 U.S.C. 181) and for review pursuant to the Atomic Energy Act (42 U.S.C. 218(c)).

7. A record from this system of records may be disclosed, as a routine use, to the Administrator, General Services, or his/her designee, during an inspection of records conducted by GSA as part of that agency's responsibility to recommend improvements in records management practices and programs, under authority of 44 U.S.C. 2904 and 2906. Such disclosure shall be made in accordance with the GSA regulations governing inspection of records for this purpose, and any other relevant (i.e., GSA or Commerce) directive. Such disclosure shall not be used to make determinations about individuals.

8. A record from this system of records may be disclosed, as a routine use, to the public after either publication of the application pursuant to 35 U.S.C. 122(b) or issuance of a patent pursuant to 35 U.S.C. 151. Further, a record may be disclosed, subject to the limitations of 37 CFR 1.14, as a routine use, to the public if the record was filed in an application which became abandoned or in which the proceedings were terminated and which application is referenced by either a published application, an application open to public inspections or an issued patent.

9. A record from this system of records may be disclosed, as a routine use, to a Federal, State, or local law enforcement agency, if the USPTO becomes aware of a violation or potential violation of law or regulation.

UNITED STATES PATENT AND TRADEMARK OFFICE

Commissioner for Patents
United States Patent and Trademark Office
P.O. Box 1450
Alexandria, VA 22313-1450
www.uspto.gov

In re Patent No. 6849312
Issue Date: February 1,2005
Application No. 09980589
Filed: August 6,2002
Attorney Docket No. 0175-0323P

:DECISION GRANTING PETITION
:UNDER 37 CFR 1.378(c)

This is a decision on the electronic petition, filed October 19,2009 ,under 37 CFR 1.378(c) to accept the unintentionally delayed payment of the 3.5 year maintenance fee for the above-identified patent.

The petition is **GRANTED**.

The maintenance fee is accepted, and the above-identified patent reinstated as of October 19,2009 . This decision also constitutes notice that the fee has been accepted. An electronic copy of the petition and this decision has been created as an entry in the Image File Wrapper. Nevertheless, petitioner should print and retain an independent copy.

Telephone inquiries related to this electronic decision should be directed to the Electronic Business Center at 1-866-217-9197.

UNITED STATES PATENT AND TRADEMARK OFFICE
MAR 29 2002
COMMISSIONER FOR PATENTS
UNITED STATES PATENT AND TRADEMARK OFFICE
WASHINGTON, D.C. 20231
www.uspto.gov

Christie Parker & Hale
P.O. Box 7068
Pasadena, CA 91109-7068

In re Application of	:	
Yamada et al.	:	
Application No.: 09/980,606	:	DECISION
PCT No.: PCT/JP01/02073	:	
Int. Filing Date: 15 March 2001	:	UNDER
Priority Date: 15 March 2000	:	
Attorney Docket No.: 45923/DBP	:	37 CFR 1.182
For: Optical Waveguide Modulator Equipped	:	
With An Output Light Monitor	:	

This is a decision on applicants' "Request For Correction Of Inventor's Name In International Application" filed on 19 February 2002, which is being treated under 37 CFR 1.182.

BACKGROUND

This international application was filed on 15 March 2001 and claimed a priority date of 15 March 2000. The International Bureau transmitted a copy of the published international application to the USPTO on 20 September 2001. No Demand electing the United States appears to have been filed prior to the elapse of 19 months from the priority date. Consequently, the twenty period for payment of the basic national fee in the United States expired as of midnight on 15 November 2001.

On 15 November 2001, applicants filed a Transmittal Letter accompanied by, *inter alia*, the basic national fee and a declaration. The declaration named an inventor (Norikazu Miyazaki) who was not named in the published international application, and did not name an inventor (Tokuichi Miyazaki) who was named in the published international application.

DISCUSSION

A review of the application file, including applicants' arguments, reveals that one of the applicants is identified as TOKUICHI MIYAZAKI in the published international application, whereas the applicant is identified as NORIKAZU MIYAZAKI in the Declaration filed on March 15, 2001. In that this is clearly more than a mere typographic error or phonetic misspelling of applicant's name, a proper petition under 37 CFR 1.182 is required to resolve this matter. Such a petition must be accompanied by the $130.00 petition fee and by verified statements by the inventor and any other individuals having first-hand knowledge of the error. These statements must set forth in detail the specific circumstances as to how and when the error was made and discovered, and must also state (if appropriate) that the mistake was an inadvertent error made without deceptive intent.

CONCLUSION

The request is **DISMISSED** without prejudice.

If reconsideration on the merits of this petition is desired, a proper response must be filed within **TWO (2) MONTHS** from the mail date of this decision. Extensions of time are available under 37 CFR 1.136(a). Any reconsideration request should include a cover letter entitled "Petition Under 37 CFR 1.182" and be accompanied by the required petition fee and an acceptable explanation of the facts as discussed above. Failure to timely file a proper response will result in ABANDONMENT of the application.

Please direct any further correspondence with respect to this matter to the Assistant Commissioner for Patents, Box PCT, Washington, DC 20231, and address the contents of the letter to the attention of the PCT Legal Office.

Leonard Smith
PCT Legal Examiner
PCT Legal Office

George M. Dombroske
PCT Legal Examiner
PCT Legal Office
Tel: (703) 308-6721
Fax: (703) 308-6459

17 SEP 2004
UNITED STATES PATENT AND TRADEMARK OFFICE

COMMISSIONER FOR PATENTS
UNITED STATES PATENT AND TRADEMARK OFFICE
ALEXANDRIA, VA 22313-1450
www.uspto.gov

Christie Parker & Hale
P.O. Box 7068
Pasadena, CA 91109-7068

In re Application of	:	
Yamada et al.	:	
Application No.: 09/980,606	:	DECISION
PCT No.: PCT/JP01/02073	:	
Int. Filing Date: 15 March 2001	:	UNDER
Priority Date: 15 March 2000	:	
Attorney Docket No.: 45923/DBP	:	37 CFR 1.182
For: Optical Waveguide Modulator Equipped With An Output Light Monitor	:	

This is a decision on applicants' "Petition Under 37 CFR 1.1.82" and the "Petition For Withdrawal Of Abandonment" filed on 22 October 2003.

DISCUSSION

Petition For Withdrawal Of Abandonment

On 01 October 2003, a Notification of Abandonment (From PCT/DO/EO/909) was mailed to applicants, indicating that this international application had become abandoned with respect to the U.S. for failure to timely reply to the decision mailed on 29 March 2002. Petitioner requests that the holding of abandonment be withdrawn. In support of this request. petitioner has provided a copy of a return which itemizes a "Petition Under 37 CFR 1.182" and a "Joint Declaration of Tomomi Yanagimachi and Norikazu Miyazaki," and which is stamped "Rec'd PCT/PTO 29 MAY 2002." MPEP 503 states in part that "A postcard receipt which itemizes and properly identifies the papers which are being filed serves as *prima facie* evidence of receipt in the PTO of all the items listed thereon on the date stamped thereon by the PTO." Pursuant to that practice, the copies of the papers itemized on the return postcard receipt are regarded as filed on 29 May 2002. Accordingly, the Notification of Abandonment is **VACATED**.

Petition Under 37 CFR 1.182

Petitioner renews the request to "recognize the name Norikazu Miyazaki, instead of Tokuichi Miyazaki, as the correct name of one of the three inventors." The petition is accompanied by a "Joint Declaration Of Tomomi Yanagimachi And Norikazu Miyazaki" which explains how the discrepancy arose from a transliteration error. Based on the totality of the present record, it would now be appropriate to grant the requested relief at this time.

CONCLUSION

The petition under 37 CFR 1.182 is **GRANTED**.

This application is being forwarded to the National Stage Processing Branch for further processing. The date of the application under 35 U.S.C. 371(c)(1), (2) and (4) is **15 November 2001.**

Leonard Smith
PCT Legal Examiner
PCT Legal Office

George M. Dombroske
PCT Legal Examiner
PCT Legal Office
Tel: (703) 308-6721
(571) 272-3283
Fax: (703) 308-6459
(571) 273-0459

MAR 2 9 2002

UNITED STATES PATENT AND TRADEMARK OFFICE

COMMISSIONER FOR PATENTS
UNITED STATES PATENT AND TRADEMARK OFFICE
WASHINGTON, D.C. 20231
www.uspto.gov

Nixon & Vanderhaye
1100 North Glebe Road, 8th Floor
Arlington, VA 22201-4714

In re Application of:	:	
Briel et al.	:	
Application No.: 09/980636	:	DECISION
PCT No.: PCT/GB01/01563	:	
Int. Filing Date: 05 April 2001	:	ON
Priority Date: 5 April 2000	:	
Atty. Docket No.: 36-1642	:	PETITION
For: Data Management System	:	

This is in response to the "Petition Under Rule 47(A)" filed on 05 December 2001.

BACKGROUND

This international application was filed on 05 April 2001, and claimed an earliest priority date of 05 April 2000. The International Bureau transmitted a copy of the published international application to the USPTO on 11 October 2001. No Demand electing the United States was filed prior to the elapse of 19 months from the priority date. Accordingly, the period for paying the basic national fee in the United States expired as of midnight on 05 December 2001.

On 05 December 2001, applicant filed the basic national fee accompanied by, *inter alia*, a Transmittal Letter and the instant petition.

DISCUSSION

A petition under 37 CFR 1.47(a) must be accompanied by (1) the fee under 37 CFR 1.17(h), (2) factual proof that the missing joint inventor refuses to execute the application or cannot be reached after diligent effort, (3) a statement of the last known address of the missing inventor, and (4) an oath or declaration by each 37 CFR 1.47(a) applicant on his or her own behalf and on behalf of the non-signing joint inventor. Petitioner has satisfied requirements (1), (3) and (4).

Regarding requirement (1), the petition is accompanied by the required petition fee.

Regarding requirement (2), the evidence now of record is insufficient to establish that the missing joint inventor refuses to execute the application or cannot be reached after diligent effort. The evidence includes a copy of an e-mail message from non-signing inventor William Brook, dated 22 May 2001, which states that, at that time, "I'd like to see some signs of movement

before I start spending my valuable time helping AT & T and BT receive the patent if it is due." This statement does not directly and specifically demonstrate that Mr. Brook *refuses to execute and oath or declaration*. Moreover, this e-mail is dated more than six months prior to the date the instant petition was filed. Petitioner has neither alleged nor shown whether Mr. Brook still allegedly refused to sign an oath or declaration as of the filing date of the petition. Meanwhile, the e-mail from Simon Roberts dated 16 May 2001 is not persuasive because it is not a verified statement from a party having direct knowledge of the facts alleged. Also, petitioner does not allege or show that a complete copy of the application papers (description, claims, drawings, abstract and declaration) was presented to Mr. Brook for his signature. Furthermore, regarding paragraph (16) of the "Declaration of Roger Nash," Mr. Nash does not identify the date and time of the alleged oral refusal. As such, requirement (2) has not been satisfied.

With respect to requirement (3), the petition includes a statement of the last known address of the missing inventor.

With respect to requirement (4), the petition is accompanied by an appropriate declaration.

For the reasons discussed above, it would not be appropriate to grant the requested relief on the basis of the present record.

CONCLUSION

The petition is **DISMISSED**, without prejudice.

If reconsideration on the merits of this petition is desired, a proper response must be filed within **TWO (2) MONTHS** from the mail date of this decision. Failure to timely file a proper response will result in abandonment of the application. Any reconsideration request should include a cover letter entitled "Renewed Petition Under 37 CFR 1.47." Extensions of time under 37 CFR 1.136(a) are available.

Any further correspondence with respect to this matter should be addressed to the Assistant Commissioner for Patents, Box PCT, Washington, DC 20231, with the contents of the letter marked to the attention of the PCT Legal Office.

Leonard Smith
PCT Legal Examiner
PCT Legal Office

George M. Dombroske
PCT Legal Examiner
PCT Legal Office
Tel: (703) 308-6721
Fax: (703) 308-6459

22 JAN 2003

UNITED STATES PATENT AND TRADEMARK OFFICE

COMMISSIONER FOR PATENTS
UNITED STATES PATENT AND TRADEMARK OFFICE
WASHINGTON, D.C. 20231
www.uspto.gov

Nixon & Vanderhaye
1100 North Glebe Road, 8th Floor
Arlington, VA 22201-4714

In re Application of:	:	
Briel et al.	:	
Application No.: 09/980636	:	
PCT No.: PCT/GB01/01563	:	
Int. Filing Date: 05 April 2001	:	DECISION
Priority Date: 5 April 2000	:	
Atty. Docket No.: 36-1642	:	
For: Data Management System	:	

This is in response to the "Response To Decision On Petition" filed on 29 August 2002.

BACKGROUND

This international application was filed on 05 April 2001, and claimed an earliest priority date of 05 April 2000. The International Bureau transmitted a copy of the published international application to the USPTO on 11 October 2001. No Demand electing the United States was filed prior to the elapse of 19 months from the priority date. Accordingly, the period for paying the basic national fee in the United States expired as of midnight on 05 December 2001.

On 05 December 2001, applicant filed the basic national fee accompanied by, *inter alia*, a Transmittal Letter and the instant petition. The petition sought status under 37 CFR 1.47(a) without the signature of joint inventor William Brook on the declaration.

On 29 March 2002, a Decision on Petition was mailed to applicants, dismissing the decision of 05 December 2001 on the basis that the evidence of record was insufficient to establish that the missing joint inventor refused to execute the application or could not be reached after diligent effort.

Applicants filed the instant response on 29 August 2002.

DISCUSSION

The instant response includes a declaration of the inventors executed by William Brook. As all of the joint inventors have now signed, the declaration is now in compliance with 37 CFR 1.497(a) and (b).

CONCLUSION

The declaration is **ACCEPTED**.

Counsel's Deposit Account No. 36-1642 is being charged in the amount of $130.00 for the surcharge under 37 CFR 1.492(e), as authorized by the instant response.

This application is being forwarded to the National Stage Processing Branch for further processing. The date of the application under 35 U.S.C. 371(c)(1), (2) and (4) is **29 August 2002**.

Richard Cole
PCT Legal Examiner
PCT Legal Office

George M. Dombroske
PCT Legal Examiner
PCT Legal Office
Tel: (703) 308-6721
Fax: (703) 308-6459

UNITED STATES PATENT AND TRADEMARK OFFICE

Commissioner for Patents
United States Patent and Trademark Office
P.O. Box 1450
Alexandria, VA 22313-1450
www.uspto.gov

Edward W. Callan
No. 705, PMB 452
3830 Valley Centre Drive
San Diego, CA 92130

MAILED
SEP 02 2004
Technology Center 2100

In re Application of:
Jens Erik SORENSEN, et al.
Application No. 09/980,654
Filed: October 25, 2001
For: MANAGEMENT OF IDEAS ACCUMULATED IN A COMPUTER DATABASE

DECISION ON PETITION TO MAKE SPECIAL

This is a decision on the petition under 37 C.F.R. § 1.102(c) and M.P.E.P. § 708.02, Section IV: Applicant's Age, filed June 1, 2004 to make the above-identified application special.

A grantable petition to make special under 37 C.F.R. § 1.102(c) and in accordance with M.P.E.P. § 708.02, Section IV must include a showing, as by a birth certificate or the applicant's statement, that the applicant is sixty five (65) years of age or more. No fee is required for this petition.

The petition includes a statement that the applicant, Jens Erik Sorensen, is over sixty five (65) years of age.

Accordingly, the petition is GRANTED. The application is being forwarded to the examiner for expedite prosecution.

Vincent N. Trans
Special Program Examiner
Technology Center 2100
Computer Architecture, Software, and Information Security
703-305-9750

18 MAR 2003

UNITED STATES PATENT AND TRADEMARK OFFICE

COMMISSIONER FOR PATENTS
UNITED STATES PATENT AND TRADEMARK OFFICE
WASHINGTON, D.C. 20231
www.uspto.gov

DOWNING, Marianne
Mintz, Levin, Cohn, Ferris,
Glovsky & Popeo, P.C.

In re Application of	:	
SCHREPPFER et al	:	DECISION ON
Application No.: 09/980,661	:	
PCT No.: PCT/IB01/00334	:	PETITION
Int. Filing Date: 06 March 2001	:	
Priority Date: 06 March 2001	:	UNDER 37 CFR 1.182
Attorney's Docket No.: 24334-001	:	
For: METHOD AND DEVICE FOR DETERMINING	:	
THE CONCENTRATION OF A SUBSTANCE	:	
IN BODY LIQUID	:	

This decision is in response to the "PETITION UNDER 37 CFR 1.182" faxed on 17 July 2002. The petition fee of $130.00 has been charged to counsel's Deposit Account No.: 50-0311 as authorized on the facsimile.

DISCUSSION

In a communication from this Office on 17 June 2002, it was indicated that applicants had not provided the complete international application because the transmittal letter had an international application number of PCT/IB/00334.

On 17 July 2002, applicants facsimile a petition under 37 CFR 1.182 to clarify the international application number of the above national application. The facsimile states that the complete international application number is PCT/IB01/00334 and that this is the proper PCT number for the above reference application. Applicants provided a copy of Acknowledgment of Receipt of Documents filed with the International Bureau as Receiving Office (PCT/RO/199) showing the international application number as PCT/IB01/00334.

Therefore, the present application should in fact be the national stage application of international application **PCT/IB01/00334.**

DECISION

The petition under 37 CFR 1.182 is **GRANTED.**

This application is being returned to the United States Designated/Elected Office (DO/EO/US) for continued processing.

Leonard Smith
PCT Legal Examiner
PCT Legal Office

Rafael Bacares
PCT Legal Examiner
PCT Legal Office
Tel: (703) 308-6312
Fax: (703) 308-6459

UNITED STATES PATENT AND TRADEMARK OFFICE

Commissioner for Patents
United States Patent and Trademark Office
P.O. Box 1450
Alexandria, VA 22313-1450

MINTZ, LEVIN, COHN, FERRIS,
GLOVSKY AND POPEO, P.C.
ONE FINANCIAL CENTER
BOSTON, MA 02111

COPY MAILED

JUN 0 8 2004

OFFICE OF PETITIONS

In re Application of :
Schrepfer et al. :
Application No. 09/980,661 : ON PETITION
Filed: October 20, 2003 :
Attorney Docket No. 243334-001 NATL :

This decision concerns the May 28, 2004 "Petition Requesting Correction of Typographical Error Pursuant to 37 CFR 1.182 - Questions Not Specifically Provided For," requesting to correct the spelling of an inventor's last name.

The petition is **DISMISSED as moot.**

The petition raises 2 issues: spelling of an inventor's name, and, order of the joint-inventors.

Inventor's name

The petition points out that the last name of 1 of the joint inventors, Etienne Hirt, was mis-spelled as "Hart" in the October 2, 2003 Assignment Recordation Cover Sheet, and requests correction accordingly.

The application declaration properly lists the last name of this inventor as "Hirt" which is also the name shown in the USPTO record. Therefore, no name correction with respect to PALM is necessary. The petition is thus dismissed as moot. The $130 petition fee enclosed with the petition has been credited to Deposit Account No. 50-0311 as authorized in the June 20, 2003 application transmittal.

Order of inventors

The petition refers to inventor Etienne Hirt as the "first inventor." However, Etienne Hirt is the third named-inventor in the application declaration. Therefore, the inventorship for the instant application is shown in the USPTO record as "Schrepfer et al." rather than "Hirt et al." If the order appearing in the application declaration is incorrect and is desired to be changed, a supplemental declaration listing the inventors in the proper order must be submitted along with a petition under 37 CFR 1.182 and the $130 petition fee.

Finally, a copy of the instant petition is being forwarded to the Assignment Branch for correction of the last name of inventor Etienne Hirt (from "Hart" to "Hirt") in the USPTO assignment record.

Telephone inquiries should be directed to the undersigned at (703) 308-0763.

RC Tang
Petitions Attorney
Office of Petitions

UNITED STATES PATENT AND TRADEMARK OFFICE

Commissioner for Patents
United States Patent and Trademark Office
P.O. Box 1450
Alexandria, VA 22313-1450
www.uspto.gov

MINTZ, LEVIN, COHN, FERRIS, GLOVSKY AND POPEO, P.C
ONE FINANCIAL CENTER
BOSTON MA 02111

MAILED

MAR 01 2010

OFFICE OF PETITIONS

In re Application of	:	
Schrepfer et al.	:	ON REQUEST FOR
Application No. 09/980661	:	RECONSIDERATION OF
Filing or 371(c) Date: 10/02/2003	:	PATENT TERM ADJUSTMENT
Attorney Docket Number:	:	
24334-001	:	

This is a decision on the "REQUEST FOR RECONSIDERATION OF PATENT TERM ADJUSTMENT UNDER 37 C.F.R. § 1.705(b)," filed September 21, 2009.

The application for patent term adjustment ("PTA") under 37 CFR 1.705(b) is **GRANTED TO THE EXTENT INDICATED**.

The Determination of Patent Term Adjustment mailed September 1, 2009 indicated a patent term adjustment to date of 598 days. Applicants petition for reconsideration of the patent term adjustment calculation from 598 days, as calculated by the Office, to 1186 days. Applicants request this correction based upon (1) an assertion that the Office erred in failing to calculate a delay of 51 days and (2) on the basis that the Office will take in excess of three years to issue this patent.

As to (1) indicated above, review of the record reveals that, as indicated by applicants, the Office neglected to assess a reduction of 51 days in accordance with 37 CFR 1.704(b) in connection with the reply to the Notification mailed May 12, 2003. The reduction commenced August 13, 2003, the day after the date that is three months after the date that the Notification was mailed, and ended October 2, 2003, the date that a reply to the Notification was filed.

In this regard, the request for reconsideration of patent term adjustment under 37 CFR 1.705(b) is **GRANTED**. The total applicant delay is increased from 196 days to 247 days.

As to (2) indicated above, applicants argue that the application is entitled to additional adjustment pursuant to 37 CFR 1.702(b), as it relates to the Office's failure to issue the patent within 3 years.

In this regard, the request for reconsideration of patent term adjustment under 37 CFR 1.705(b) is **DISMISSED as PREMATURE** insofar as it relates to adjustment under 37 CFR 1.702(b).

As to the Office's failure to issue the patent within 3 years of the filing date, knowledge of the actual date the patent issues is required to calculate the amount, if any, of additional patent term patentee is entitled to for Office failure to issue the patent within 3 years. See § 1.702(b). (This is true even where a request for continued examination (RCE) was filed). The computer will not undertake the § 1.702(b) calculation until the actual date of issuance of the patent has been determined. Likewise, the computer will not calculate any further Office delay under § 1.702(a)(4) or applicant delay under § 1.704(c)(10) until the actual date of issuance of the patent has been determined. As such, the Office can not make a determination on the correctness of the patent term adjustment until the patent has issued.

Requesting reconsideration of the patent term adjustment to be indicated on the patent under 37 CFR 1.705(b) based on the initial determination of patent term adjustment and a projected issuance date of the patent (or even the filing date of the request for continued examination) is premature. Accordingly, it is appropriate to dismiss as premature such a request.

Rather than file an application for patent term adjustment under 37 CFR 1.705(b) contesting the 37 CFR 1.702(b) calculation at the time of the mailing of the notice of allowance, applicant is advised that they may wait until the time of the issuance of the patent and file a request for reconsideration of the patent term adjustment pursuant to 37 CFR 1.705(d). As the USPTO does not calculate the amount of time earned pursuant to 37 CFR 1.702(b) until the time of the issuance of the patent, the Office will consider any request for reconsideration of the patent term adjustment due to an error in the calculation of 37 CFR 1.702(b) to be timely if the request for reconsideration is filed within two months of the issuance of the patent. However, as to all other bases for contesting the initial determination of patent term adjustment received with the notice of allowance, applicant must timely file an application for patent term adjustment prior to the payment of the issue fee[1].

The Office acknowledges submission of the $200.00 fee set forth in 37 CFR 1.18(e) for consideration of the application for patent term adjustment under 37 CFR 1.705(b).

Any request for reconsideration of the patent term adjustment indicated on the patent, including any request as it relates to the Office's failure to issue the patent within 3 years of the filing date, must be timely filed within 2 months after issuance pursuant to 37 CFR 1.705(d) and **must** include payment of the required fee under 37 CFR 1.18(e).

---

[1] For example, if applicant disputes both the calculation of patent term adjustment under 37 CFR 1.702(a)(1) for Office failure to mail a first Office action or notice of allowance not later than fourteen months after the date on which the application was filed and under 37 CFR 1.702(b) for Office failure to issue a patent within three years of the actual filing date of the application, then applicant must still timely file an application for patent term adjustment prior to the payment of the issue fee to contest the calculation of Office delay in issuing a first Office action or notice of allowance. See 37 CFR 1.705(b) and 35 U.S.C. 154(b)(3)(B). A dispute as to the calculation of the §1.702(a)(1) period raised on request for reconsideration of patent term adjustment under 37 CFR 1.705(d) will be dismissed as untimely filed.

The Office of Data Management has been advised of this decision. This application is being referred to the Office of Data Management for issuance of the patent.

Telephone inquiries specific to this matter should be directed to Attorney Derek Woods at (571) 272-3232.

/ALESIA M. BROWN/

Alesia Brown
Petitions Attorney
Office of Petitions
Office of the Deputy Commissioner
for Patent Examination Policy

Enclosure: Adjusted PAIR Calculation

Day : Sunday
Date: 2/28/2010

PALM INTRANET

Time: 17:20:52

PTA Calculations for Application: 09/980661			
Application Filing Date:	10/02/2003	PTO Delay (PTO):	794
Issue Date of Patent:		Three Years:	0
Pre-Issue Petitions:	0	Applicant Delay (APPL):	196
Post-Issue Petitions:	0	Total PTA (days):	547
PTO Delay Adjustment:	-51		

File Contents History

Number	Date	Contents Description	PTO	APPL	START
88	02/28/2010	ADJUSTMENT OF PTA CALCULATION BY PTO		51	
80	09/01/2009	MAIL NOTICE OF ALLOWANCE	18		69
79	08/20/2009	ISSUE REVISION COMPLETED			
78	07/28/2009	ALLOWED CASE RETURNED TO THE EXAMINER FOR CLERICAL PROCESSING			
77	07/28/2009	NOTICE OF ALLOWANCE DATA VERIFICATION COMPLETED			
76	07/28/2009	DOCUMENT VERIFICATION			
75	01/15/2004	REFERENCE CAPTURE ON IDS			
74	01/15/2004	INFORMATION DISCLOSURE STATEMENT (IDS) FILED			
73	07/17/2009	NOTICE OF ALLOWABILITY			
70	05/13/2009	DATE FORWARDED TO EXAMINER			
69	04/14/2009	RESPONSE AFTER NON-FINAL ACTION		23	67
68	04/14/2009	REQUEST FOR EXTENSION OF TIME - GRANTED			
67	12/22/2008	MAIL NON-FINAL REJECTION			
66	12/21/2008	NON-FINAL REJECTION			
58	10/08/2008	DATE FORWARDED TO EXAMINER			
57	10/01/2008	AMENDMENT SUBMITTED/ENTERED WITH FILING OF CPA/RCE			
56	10/08/2008	DATE FORWARDED TO EXAMINER			
55	10/01/2008	REQUEST FOR CONTINUED EXAMINATION (RCE)		4	51
54	10/08/2008	DISPOSAL FOR A RCE / CPA / R129			
53	10/01/2008	REQUEST FOR EXTENSION OF TIME - GRANTED			
52	10/01/2008	WORKFLOW - REQUEST FOR RCE - BEGIN			

51	06/27/2008	MAIL FINAL REJECTION (PTOL - 326)			
50	06/23/2008	FINAL REJECTION			
48	04/10/2008	DATE FORWARDED TO EXAMINER			
47	03/19/2008	RESPONSE AFTER NON-FINAL ACTION		141	42
46	03/19/2008	REQUEST FOR EXTENSION OF TIME - GRANTED			
45	02/20/2008	MISCELLANEOUS INCOMING LETTER			
44	01/24/2008	MAIL NOTICE OF INFORMAL OR NON-RESPONSIVE AMENDMENT			
43	11/05/2007	DATE FORWARDED TO EXAMINER			
42.1	10/30/2007	INFORMAL OR NON-RESPONSIVE AMENDMENT AFTER EXAMINER ACTION			
42	10/30/2007	RESPONSE AFTER NON-FINAL ACTION			
41	10/01/2007	INFORMATION DISCLOSURE STATEMENT (IDS) FILED			
39	08/09/2007	MAIL NON-FINAL REJECTION			
38	08/06/2007	NON-FINAL REJECTION			
36	05/31/2007	MISCELLANEOUS INCOMING LETTER			
35	01/15/2004	INFORMATION DISCLOSURE STATEMENT CONSIDERED			
34	01/15/2004	INFORMATION DISCLOSURE STATEMENT (IDS) FILED			
33	05/23/2007	DATE FORWARDED TO EXAMINER			
32	05/15/2007	RESPONSE AFTER NON-FINAL ACTION		28	30
31	05/15/2007	REQUEST FOR EXTENSION OF TIME - GRANTED			
30	01/17/2007	MAIL NON-FINAL REJECTION	776		10
29	01/08/2007	NON-FINAL REJECTION			
28	07/28/2006	INFORMATION DISCLOSURE STATEMENT CONSIDERED			
27	08/02/2004	INFORMATION DISCLOSURE STATEMENT CONSIDERED			
26	07/28/2006	REFERENCE CAPTURE ON IDS			
25.7	07/28/2006	INFORMATION DISCLOSURE STATEMENT (IDS) FILED			
25	07/28/2006	INFORMATION DISCLOSURE STATEMENT (IDS) FILED			
24	06/26/2006	CASE DOCKETED TO EXAMINER IN GAU			
23	08/02/2004	REFERENCE CAPTURE ON IDS			
22.7	08/02/2004	INFORMATION DISCLOSURE STATEMENT (IDS)			

		FILED			
22	08/02/2004	INFORMATION DISCLOSURE STATEMENT (IDS) FILED			
21	11/09/2004	TRANSFER INQUIRY TO GAU			
20	06/17/2004	REFERENCE CAPTURE ON IDS			
19.7	06/17/2004	INFORMATION DISCLOSURE STATEMENT (IDS) FILED			
19	06/17/2004	INFORMATION DISCLOSURE STATEMENT (IDS) FILED			
18	06/08/2004	MAIL-PETITION DECISION - DISMISSED			
17	06/04/2004	PETITION ENTERED			
16	03/03/2004	REFERENCE CAPTURE ON IDS			
15.7	03/03/2004	INFORMATION DISCLOSURE STATEMENT (IDS) FILED			
15	03/03/2004	INFORMATION DISCLOSURE STATEMENT (IDS) FILED			
14	01/16/2004	REFERENCE CAPTURE ON IDS			
13.7	12/10/2003	INFORMATION DISCLOSURE STATEMENT (IDS) FILED			
13	12/10/2003	INFORMATION DISCLOSURE STATEMENT (IDS) FILED			
12	01/16/2004	IFW TSS PROCESSING BY TECH CENTER COMPLETE			
11	12/28/2003	CLEARED BY OIPE CSR			
10	10/02/2003	371 COMPLETION DATE			
9	11/19/2003	APPLICATION DISPATCHED FROM OIPE			
8	11/19/2003	NOTICE OF DO/EO ACCEPTANCE MAILED			
7	10/02/2003	ADDITIONAL APPLICATION FILING FEES			
6	10/02/2003	A STATEMENT BY ONE OR MORE INVENTORS SATISFYING THE REQUIREMENT UNDER 35 USC 115, OATH OF THE APPLIC			
5	10/02/2003	DRAWING PRELIMINARY AMENDMENT			

Search Another: Application# [ ] Search

EXPLANATION OF PTA CALCULATION

EXPLANATION OF PTE CALCULATION

To go back, right click here and select Back. To go forward, right click here and select Forward. To refresh, right click here and select Refresh.

Back to OASIS | Home page

MAR 0 5 200[redacted]

UNITED STATES PATENT AND TRADEMARK OFFICE

COMMISSIONER FOR PATENTS
UNITED STATES PATENT AND TRADEMARK OFFICE
WASHINGTON, D.C. 20231
www.uspto.gov

Peng Chen
Morrison & Foerster LLP
3811 Valley Centre Drive
Suite 500
San Diego, California 92130

In re Application of	:	
ZHOU, Mingdong	:	
Application No.: 09/980,672	:	DECISION ON PETITION
PCT No.: PCT/AU99/01137	:	UNDER 37 CFR 1.137(b)
Int. Filing Date: 21 December 1999	:	
Priority Date: 21 December 1998	:	
Attorney Docket No.: 52012000200	:	
For: CARDIAC MUSCLE FUNCTION AND MANIPULATION		

The petition to revive under 37 CFR 1.137(b) filed 23 October 2001 in the above-captioned application is hereby **GRANTED** as follows:

Applicant's statement that "both the failure to enter the U.S. national phase and the brief delay in filing a petition to revive the application were unintentional" has been construed as meaning that "entire delay in filing the required reply from the due date for the reply until the filing of this petition under 37 CFR 1.137(b) was unintentional." If this is an incorrect interpretation in view of the rules, Petitioner must immediately notify the PCT Legal Office of such error.

A review of the application file reveals that applicant has submitted the basic national fee of $520 and the requirements of 37 CFR 1.137(b) have been satisfied. Therefore, the request to revive the application abandoned under 35 U.S.C. 371(d) is granted as to the National stage in the United States of America.

This application is being forwarded to the United States Designated/Elected Office (US/DO/EO) for continued processing including the issuance of a Notification of Missing Requirements (Form PCT/DO/EO/905) indicating that an oath or declaration is required.

Anthony Smith

Anthony Smith
Attorney-Advisor
PCT Legal Office
Telephone: (703) 308-6314
Facsimile: (703) 308-6459

UNITED STATES PATENT AND TRADEMARK OFFICE

Commissioner for Patents
United States Patent and Trademark Office
P.O. Box 1450
Alexandria, VA 22313-1450
www.uspto.gov

COPY MAILED
NOV 0 8 2006
OFFICE OF PETITIONS

PAUL, HASTINGS, JANOFSKY & WALKER LLP
P.O. BOX 919092
SAN DIEGO CA 92191-9092

In re Application of	:	
ZHOU	:	
Application No. 09/980,672	:	DECISION ON PETITION
Filed: March 8, 2002	:	TO WITHDRAW
Attorney Docket No. 58981.00002C	:	FROM RECORD
	:	

This is a decision on the Request to Withdraw as attorney or agent of record under 37 C.F.R. § 1.36(b), filed April 5, 2006.

The request is **NOT APPROVED** as moot.

A review of the file record indicates that the power of attorney to Joshua G. Gigger and the attorneys of PAUL HASTINGS JANOFSKY & WALKER LLP has been revoked by the assignee of the patent application on April 26, 2006. Accordingly, the request to withdraw under 37 C.F.R. § 1.36(b) is moot.

All future communications from the Office will continue to be directed to the below-listed address until otherwise notified by applicant.

Telephone inquires concerning this decision should be directed to the undersigned at 571-272-7253.

Monica A. Graves
Petitions Examiner
Office of Petitions

cc: **JONES DAY**
222 EAST 41ST ST
NEW YORK, NY 10017

06 FEB 2003

UNITED STATES PATENT AND TRADEMARK OFFICE

#7

COMMISSIONER FOR PATENTS
UNITED STATES PATENT AND TRADEMARK OFFICE
WASHINGTON, D.C. 20231
www.uspto.gov

Robert W. Glatz
MYERS, BIGEL, SIBLEY & SAJOVEC
P.O. Box 37428
Raleigh, NC 27627

In re Application of	:	
RADELET, Christian	:	
U.S. Application No.: 09/980,694	:	DECISION ON PETITION
PCT No.: PCT/GB00/01504	:	UNDER 37 CFR 1.182
International Filing Date: 18 April 2000	:	
Priority Date: 26 April 1999	:	
Attorney's Docket No.: 9303-2	:	
For: A CLOSURE CASING	:	

This decision is issued in response to the "Petition And Submittal Of Replacement Transmittal Letter For National Phase Filing Under 35 U.S.C. 371" filed 05 February 2003, which requests that applicant's 24 October 2001 submission be treated as a national stage submission for the above captioned international application and not for the international application indicated on the originally filed Transmittal Letter. Applicants have authorized a charge to Deposit Account No. 50-0220 for the petition fee.

BACKGROUND

On 18 April 2000, applicant filed international application PCT/GB00/01504 which claimed a priority date of 26 April 1999 and which designated the United States. On 02 November 2000, a copy of the international application was communicated to the United States Patent and Trademark Office ("USPTO") by the International Bureau ("IB").

A Demand was filed with the International Preliminary Examining Authority electing the United States prior to the expiration of 19 months from the priority date. As a result, the deadline for submission of the basic national fee was extended to expire thirty months from the priority date, i.e., 26 October 2001.

On 24 October 2001, applicant filed a Transmittal Letter for entry into the national stage in the United States accompanied by, among other materials: (1) a copy of international application PCT/GB00/01504; (2) a declaration executing PCT/GB00/01504; and (3) payment of the basic national fee. However, the Transmittal Letter submitted by applicants misidentified the international application number as PCT/US00/01504; the Transmittal Letter otherwise properly identifies the title, inventor, international filing date, and priority date for the intended application, PCT/GB00/01504.

Based on the erroneous international application number listed on the Transmittal Letter, the present national stage application file was created for PCT/US00/01504, rather than for PCT/GB00/01504.

On 18 January 2002, the United States Designated/Elected Office (DO/EO/US) mailed a Notification Of Acceptance indicating that the 35 U.S.C. 371 date for the present application was 24 October 2001. However, the Notification Of Acceptance identified the application as a national stage of PCT/US00/01504, as did the filing receipt.

On 05 February 2003, applicants filed the "Petition And Submittal Of Replacement Transmittal Letter For National Phase Filing Under 35 U.S.C. 371" considered herein. This petition was accompanied by a corrected Transmittal Letter identifying the international application as PCT/GB00/01504.

DISCUSSION

In the present petition, applicants confirms that the listing of PCT/US00/01504 in the original Transmittal Letter was an error, and that it was applicant's intent for the Transmittal Letter to refer to PCT/GB00/01504, the application attached to the original Transmittal Letter and the application referenced in the executed declaration submitted with the original Transmittal Letter. Applicant has also provided authorization to charge Deposit Account No. 50-0220 the required $130 petition fee and a corrected copy of the Transmittal Letter. Accordingly, applicant's petition to correct the Transmittal Letter is granted. This national stage file (09/980,694) is the national stage of PCT/GB00/01504.

Based on the above, the Notification Of Acceptance mailed 18 January 2002 and the filing receipt (both of which reference PCT/US00/01504 rather than PCT/GB00/01504), are appropriately vacated.

CONCLUSION

The petition under 37 CFR 1.182 **GRANTED**.

Deposit Account No. 50-0220 will be charged $130 as the required petition fee.

This application is the national stage of PCT/GB00/01504 with an international filing date of 18 April 2000 and a 35 U.S.C. 371 date of 24 October 2001.

All documents pertaining to PCT/US00/01504 have been removed from the present application file.

The Notification Of Acceptance mailed 18 January 2002 and the corresponding filing receipt are hereby **VACATED** based on their incorrect reference to PCT/US00/01504.

This application is being returned to the National Stage Processing Branch of the Office Of PCT Operations for processing in accord with this decision, including: (1) correcting USPTO records so as to identify the present application as a national stage of PCT/GB00/01504; and (2) issuing a corrected Notification Of Acceptance and corrected filing receipt which refer to the proper international application number (PCT/GB00/01504); and (3) returning this application to Group Art Unit 2831 for examination.

Richard M. Ross
PCT Petitions Attorney
PCT Legal Office
Telephone: (703) 308-6155
Facsimile: (703) 308-6459

UNITED STATES PATENT AND TRADEMARK OFFICE

COMMISSIONER FOR PATENTS
UNITED STATES PATENT AND TRADEMARK OFFICE
P.O. BOX 1450
ALEXANDRIA, VA 22313-1450
www.uspto.gov

KENYON & KENYON
ONE BROADWAY
NEW YORK NY 10004

COPY MAILED
AUG 2 6 2003
OFFICE OF PETITIONS

Applicant: Matsui et al.
Appl. No.: 09/980,701
Filing Date: November 2, 2001
Title: THERMALLY INSULATING MATERIAL HAVING EXCELLENT DURABILITY AND METHOD FOR PRODUCTION THEREOF, AND USE THEREOF AND METHOD FOR EXECUTION THEREOF
Attorney Docket No.: 11728/3
Pub. No.: US 2003/0017299 A1
Pub. Date: January 23, 2003

This is a decision on the request for corrected patent application publication under 37 CFR 1.221(b), filed on June 19, 2003 for the above-identified application.

The request is DISMISSED.

The instant request is that the application be republished because published application includes an error in the filing date of the PCT application.

37 CFR 1.221(b) is applicable "only when the Office makes a material mistake which is apparent from Office records . . . Any request for a corrected publication or revised patent application publication other than provided as provided in paragraph (a) of this section must be filed within two months from the date of the patent application publication. This period is not extendable." The request for corrected publication received on June 19, 2003, was not timely filed under 37 CFR 1.221(b).

Furthermore, since the PCT application was not published in English, the error in the PCT filing date will not affect the use of the publication as a reference. The mistake also will not affect the public's ability to appreciate the technical disclosure of the patent application publication, or determine the scope of the patent application publication or determine the scope of the provisional rights that an applicant may seek to enforce upon issuance of a patent. To help avoid these errors (errors in inventors name, continuity data, PCT filing date) in the future, applicant's representative should request a corrected filing receipt using the facsimile number (703-746-9195) on the Filing Receipt.

The applicant is advised that a "request for republication of an application previously published" may be filed under 37 CFR 1.221(a). Such a request for republication "must include a copy of the application in compliance with the Office's electronic filing system requirements and be accompanied by the publication fee set forth in § 1.18(d) and the processing fee set forth in § 1.17(i)." If the request for republication does not comply with the electronic filing system requirements, the republication will not take place and the publication fee set forth in § 1.18(d) will be refunded. The processing fee will be retained.

Any request for republication under 37 CFR 1.221(b), should be submitted via the EFS system and questions or request for reconsideration of this decision, should be addressed as follows:

By mail to: Mail Stop PGPUB
Commissioner for Patents
P.O. Box 1450
Alexandria, VA 22313-1450

By facsimile: 703-305-8568

The application is being forwarded to Technology Center 1771 to await further examination in due course.

Inquiries relating to this matter may be directed to Mark Polutta at (703) 308-8122 (voice) or (703) 746-3465 (facsimile).

Mark Polutta
Legal Advisor
Office of Patent Legal Administration
Office of the Deputy Commissioner
for Patent Examination Policy

Enclosure: Corrected Filing Receipt

UNITED STATES PATENT AND TRADEMARK OFFICE

COMMISSIONER FOR PATENTS
UNITED STATES PATENT AND TRADEMARK OFFICE
P.O. BOX 1450
ALEXANDRIA, VA 22313-1450
www.uspto.gov

MAILED

JUN 14 2004

DIRECTOR'S OFFICE
TECHNOLOGY CENTER 3600

Friedrich Kueffner
317 Madison Avenue
Suite 910
New York, NY 10017

In re Application of :
Martin Fink :
Application No. 09/980,747 :
Filed: February 14, 2002 :
For: CONTROL OF THE MOVEMENT OF A SLIDING OR SWINGING AND SLIDING DOOR IN ITS END CLOSING AREA

DECISION ON PETITION TO WITHDRAW THE HOLDING OF ABANDONMENT

This is a decision on applicant's petition to withdraw the holding of abandonment, filed in the United States Patent and Trademark Office (USPTO), on April 26, 2004.

The petition is **GRANTED** in view of the following evidence of timely filing :

☐ Postcard receipt being dated_____.

☐ USPTO return facsimile receipt dated _____ which identifies the application by serial number and the type of Response that was filed on that date.

☒ Certificate of Mailing signed on March 12, 2004 by the attorney requesting withdrawal.

☐ Hand Delivery Receipt of the specific documents submitted dated _____.

☐ Certificate of Transmission of CPA under 37 C.F.R. 1.6 filed on _____.

☐ Express Mail Receipt under 37 C.F.R. 1.10 dated _____.

This application is being forwarded to the Supervisory Legal Instruments Examiner for entry of the response filed with the petition, then to the examiner for prompt action on the response.

RAR/vdb: 6/03/04

Randolph A. Reese
Special Programs Examiner
Group 3600

25 MAR 2004

#6

UNITED STATES PATENT AND TRADEMARK OFFICE

COMMISSIONER FOR PATENTS
UNITED STATES PATENT AND TRADEMARK OFFICE
P.O. BOX 1450
ALEXANDRIA, VA 22313-1450
www.uspto.gov

Brian W. Poor
Townsend and Townsend and Crew
Two Embarcadero Center, 8th Floor
San Francisco, CA 94111

In re Application of ROBERTS et al	:	
U.S. Application No.: 09/980,758	:	
PCT Application No.: PCT/US00/13379	:	
Int. Filing Date: 15 May 2000	:	
Priority Date Claimed: 14 May 1999	:	DECISION
Attorney Docket No.: 14538A-004510US	:	
For: METHODS FOR INCREASING PLANT CELL PROLIFERATION BY FUNCTIONALLY INHIBITING A PLANT CYCLIN INHIBITOR GENE	:	

This is in response to applicant's "Petition to Withdraw Abandonment" filed 19 February 2003, which is being treated under 37 CFR 1.181. No petition fee is due.

BACKGROUND

On 15 May 2000, applicant filed international application PCT/US00/13379, which claimed priority of an earlier United States application filed 14 May 1999. A Demand for international preliminary examination, in which the United States was elected, was filed on 28 November 2000, prior to the expiration of nineteen months from the priority date. Accordingly, the thirty-month period for paying the basic national fee in the United States expired on 14 November 2001.

On 13 November 2001, applicant filed national stage papers in the United States Designated/Elected Office (DO/EO/US). The submission was accompanied by, *inter alia*, the basic national fee required by 35 U.S.C. 371(c)(1).

On 18 January 2002, the DO/EO/US mailed a Notification of Missing Requirements Under 35 U.S.C. 371 (Form PCT/DO/EO/905), which indicated that an oath or declaration in compliance with 37 CFR 1.497 and a replacement sequence listing must be filed.

On 27 January 2003, the DO/EO/US mailed a Notice of Abandonment, which indicated that the application is abandoned for failure to timely respond to the Notification of Missing Requirements.

On 19 February 2003, applicant filed the present petition under 37 CFR 1.181.

DISCUSSION

The evidence of record is sufficient to establish that the declaration and sequence listing were originally filed on 29 April 2002. Specifically, the copy of the return postcard, which includes the declaration and sequence listing in its itemized contents and which bears a USPTO date stamp of 29 April 2002, serves as *prima facie* evidence that the declaration and sequence listing were received by the USPTO on 29 April 2002.

CONCLUSION

For the reasons above, the petition under 37 CFR 1.181 is GRANTED.

The Notice of Abandonment mailed 27 January 2003 is hereby VACATED.

The application has an International Filing Date under 35 U.S.C. 363 of 15 May 2000, and a date under 35 U.S.C. 371(c)(1), (c)(2), and (c)(4) of 29 April 2002.

This application is being forwarded to the United States Designated/Elected Office (DO/EO/US) for further processing in accordance with this decision.

Bryan Tung
PCT Legal Examiner
PCT Legal Office

Telephone: 703-308-6614
Facsimile: 703-308-6459

UNITED STATES PATENT AND TRADEMARK OFFICE

Commissioner for Patents
United States Patent and Trademark Office
P.O. Box 1450
Alexandria, VA 22313-1450
www.uspto.gov

THE PROCTER & GAMBLE COMPANY
INTELLECTUAL PROPERTY DIVISION
WINTON HILL TECHNICAL CENTER - BOX 161
6110 CENTER HILL AVENUE
CINCINNATI, OH 45224

COPY MAILED

MAY 23 2005

OFFICE OF PETITIONS

In re Application of	:	
Gordon, Neil James	:	
Application No. 09/980,796	:	ON PETITION
Filed: December 3, 2001	:	
Attorney Docket No. 7640	:	

This is a decision on the petition under 37 C.F.R. § 1.137(b), filed February 14, 2005, to revive the above-identified application.

The petition is **GRANTED.**

The above-identified application became abandoned for failure to submit the issue fee in a timely manner in reply to the Notice of Allowance mailed July 29, 2004, which set a statutory period for reply of three (3) months. Accordingly, the above-identified application became abandoned on October 30, 2004. A Notice of Abandonment was mailed on December 14, 2004.

Petitioner has met the requirements to revive the above-identified application pursuant to 37 CFR 1.137(b).

This matter is being referred to the Publishing Division for processing into a patent.

Telephone inquiries regarding this decision should be directed to the undersigned at (571) 272-3282.

Liana Chase
Petitions Examiner
Office of Petitions
Office of the Deputy Commissioner
for Patent Examination Policy