UNITED STATES PATENT AND TRADEMARK OFFICE

Commissioner for Patents
United States Patent and Trademark Office
P.O. Box 1450
Alexandria, VA 22313-1450
www.uspto.gov

VLADIMIR ZEMLYAKOV
20 EMERSON COURT
NORTH ANDOVER MA 01845

COPY MAILED

MAR 3 0 2006

OFFICE OF PETITIONS

In re Application of	:	
Zemlyakov et al.	:	
Application No. 10/017,280	:	ON PETITION
Filed: 7 December, 2001	:	
For: UPPER EXTREMITY	:	
EXOSKELETON STRUCTURE AND	:	
METHOD	:	

This is a decision on the petition to withdraw holding of abandonment, filed on 21 June, 2004.

The Office apologizes for the delay in responding to the present petition and regrets any inconvenience to petitioners.

This application became abandoned on 7 November, 2003, for failure to timely file corrected drawings as required by the Notice of Allowability mailed on 6 August, 2003, which set a three (3) month statutory period for reply. Notice of Abandonment was mailed on 3 June, 2004.

Petitioners assert that a timely reply was filed on 7 August, 2003, to the non-final Office action mailed on 16 July, 2003, prior to the mailing of the Notice of Allowance, and that the reply filed on 7 August, 2003, included the corrected drawings, which were also required in the non-final Office action. In support, petitioners have supplied a copy of the reply to the non-final Office action which was not received in the Office. The reply includes a Certificate of Mailing dated 7 August, 2003, signed by Vladimir Zemlyakov. Petitioners further aver that since the drawings had been timely filed in response to the non-final Office action, petitioners believed that no additional reply was required in response to the Notice of Allowability.

Petitioners' argument has been considered, but is not persuasive. At the outset, although the Notice of Allowability was mailed before a reply to the prior, non-final Office action mailed on 16

July, 2003, was received, petitioners should have filed a separate reply to the Notice of Allowability. Specifically, the Interview Summary mailed with the Notice of Allowability states, in pertinent part:

> "THE FORMAL WRITTEN REPLY TO THE LAST OFFICE ACTION MUST INCLUDE THE SUBSTANCE OF THE INTERVIEW. (See MPEP Section 713.04). If a reply to the last Office action has already been filed, APPLICANT IS GIVEN ONE MONTH FROM THIS INTERVIEW DATE, OR THE MAILING DATE OF THIS INTERVIEW SUMMARY, WHICHEVER IS LATER, TO FILE A STATEMENT OF THE SUBSTANCE OF THE INTERVIEW.

As petitioner concededly did not file a response to the Interview Summary, petitioner failed to file a timely reply as required.

Moreover, a review of the drawings received with the present petition reveal that the drawings are not in compliance with 37 CFR 1.84 or 1.152. As such, corrected drawings are required, and the application could not have been issued as a patent using the drawings filed to date.

As such, the showing of record is that the abandonment resulted from the failure to petitioners to respond to the Notice of Allowability, rather than an error on the part of the USPTO.

As such the application is properly held abandoned.

The petition is **DISMISSED.**

The petitioners may want to consider filing a petition to revive under 37 C.F.R. 1.137(b).

Any request for reconsideration must be filed within **TWO (2) MONTHS** of the date of this decision.

Further correspondence with respect to this matter should be addressed as follows:

By mail: Mail Stop Petition
Commissioner for Patents
P.O. Box 1450
Alexandria, VA 22313-1450

By FAX: (571) 273-8300
Attn: Office of Petitions

By hand: Customer Service Window
Mail Stop Petition
Randolph Building
401 Dulany Street
Alexandria, VA 22314

Telephone inquiries related to this decision should be directed to the undersigned at 571-272-3231.

Douglas I. Wood
Senior Petitions Attorney
Office of Petitions

Encl: Form PTO-948
PTO/SB/64

Form PTO-948 (Rev. 06/03)
Application No. 10/017,280

U.S. DEPARTMENT OF COMMERCE
U.S. Patent and Trademark Office

NOTICE OF DRAFTSPERSON'S PATENT DRAWING REVIEW

The drawing(s) filed (insert date) 06/21/2004 are:

A. ____ approved by the Draftsperson under 37 CFR 1.84 or 1.152.

B. ✓ objected to by the Draftsperson under 37 CFR 1.84 or 1.152 for the reasons indicated below. Corrected drawings are required.

1. DRAWINGS. 37 CFR 1.84(a): Acceptable categories of drawings: Black ink or Color (3 sets required).

___ Color drawings are not acceptable until petition is granted. Fig(s)____

___ Pencil and non black ink not permitted. Fig(s)____

2. PHOTOGRAPHS. 37 CFR 1.84(b)

___ One (1) full-tone set is required. Fig(s)____

___ Photographs may not be mounted. 37 CFR 1.84(e)

___ Photographs must meet paper size requirements of 37 CFR 1.84(f). Fig(s)____

___ Poor quality (half-tone). Fig(s)____

3. TYPE OF PAPER. 37 CFR 1.84(e)

___ Paper not flexible, strong, white, and durable. Fig(s)____

✓ Erasures, alterations, overwritings. interlineations, folds, copy machine marks not accepted. Fig(s) 14-17 (Copy marks)

4. SIZE OF PAPER. 37 CFR 1.84(f): Acceptable sizes:
21.0 cm by 29.7 cm (DIN size A4) or
21.6 cm by 27.9 cm (8 1/2x 11 inches)

___ All drawing sheets not the same size. Sheet(s)____

___ Drawings sheets not an acceptable size. Fig(s)____

5. MARGINS. 37 CFR 1.84(g): Acceptable margins:
Top 2.5 cm Left 2.5 cm Right 1.5 cm Bottom 1.0 cm

✓ Margins not acceptable. Fig(s) 17.

✓ Top (T) ____ Left (L)
____ Right (R) ____ Bottom (B)

6. VIEWS. 37 CFR 1.84(h)

REMINDER: Specification may require revision to correspond to drawing changes, e.g., if Fig. 1 is changed to Fig. 1A, Fig 1B and Fig. 1C, etc., the specification, at the Brief Description of the Drawings, must likewise be changed.

___ Views not labeled separately or properly. Fig(s)____

7. SECTIONAL VIEWS. 37 CFR 1.84(h)(3)

___ Sectional designation should be noted with Arabic or Roman numbers. Fig(s)____

8. ARRANGEMENT OF VIEWS. 37 CFR 1.84(i)

___ Words do not appear on a horizontal, left-to-right fashion when page is either upright or turned so that the top becomes the right side, except for graphs. Fig(s)____

9. SCALE. 37 CFR 1.84(k)

___ Scale not large enough to show mechanism without crowding when drawing is reduced in size to two-thirds in reproduction. Fig(s)____

10. CHARACTER OF LINES, NUMBERS, & LETTERS. 37 CFR 1.84(l)

___ Lines, numbers & letters not uniformly thick and well defined, clean, durable, and black (poor line quality). Fig(s)____

11. SHADING. 37 CFR 1.84(m)

___ Solid black areas pale. Fig(s)____

___ Solid black shading not permitted. Fig(s)____

12. NUMBERS, LETTERS, & REFERENCE CHARACTERS. 37 CFR 1.84(p)

___ Numbers and reference characters not plain and legible. Fig(s)____

___ Figure legends are poor. Fig(s)____

___ Numbers and reference characters not oriented in the same direction as the view. 37 CFR 1.84(p)(1) Fig(s)____

___ English alphabet not used. 37 CFR 1.84(p)(2) Fig(s)____

___ Numbers, letters and reference characters must be at least 32 cm (1/8 inch) in height. 37 CFR 1.84(p)(3). Fig(s)____

13. LEAD LINES. 37 CFR 1.84(q)

___ Lead lines missing. Fig(s)____

14. NUMBERING OF SHEETS OF DRAWINGS. 37 CFR 1.84(t)

___ Sheets not numbered consecutively, and in Arabic numbers beginning with number 1. Sheet(s)____

15. NUMBERING OF VIEWS. 37 CFR 1.84(u)

___ Views not numbered consecutively, and in Arabic numerals, beginning with number 1. Fig(s)____

16. DESIGN DRAWINGS. 37 CFR 1.152

___ Surface shading shown not appropriate. Fig(s)____

___ Solid black surface shading is not permitted except when used to represent the color black as well as color contrast. Fig(s)____

COMMENTS:

Reviewer SON LAM

Date 03/28/2006

If you have questions, call (703) ~~305-8404~~ 305-0333 (EXT. 133)

Attachment to Paper No. ____

☆ U.S. GOVERNMENT PRINTING OFFICE: 2003-300-153

PTO/SB/64 (10-05)
Approved for use through 07/31/2006. OMB 0651-0031
U.S. Patent and Trademark Office; U.S. DEPARTMENT OF COMMERCE
Under the Paperwork Reduction Act of 1995, no persons are required to respond to a collection of information unless it displays a valid OMB control number.

PETITION FOR REVIVAL OF AN APPLICATION FOR PATENT ABANDONED UNINTENTIONALLY UNDER 37 CFR 1.137(b)

Docket Number (Optional)

First named inventor:

Application No.: Art Unit:

Filed: Examiner:

Title:

Attention: Office of Petitions
Mail Stop Petition
Commissioner for Patents
P.O. Box 1450
Alexandria, VA 22313-1450
FAX (571) 273-8300

NOTE: If information or assistance is needed in completing this form, please contact Petitions Information at (571) 272-3282.

The above-identified application became abandoned for failure to file a timely and proper reply to a notice or action by the United States Patent and Trademark Office. The date of abandonment is the day after the expiration date of the period set for reply in the office notice or action plus an extensions of time actually obtained.

APPLICANT HEREBY PETITIONS FOR REVIVAL OF THIS APPLICATION

NOTE: A grantable petition requires the following items:
(1) Petition fee;
(2) Reply and/or issue fee;
(3) Terminal disclaimer with disclaimer fee - required for all utility and plant applications filed before June 8, 1995; and for all design applications; and
(4) Statement that the entire delay was unintentional.

1. Petition fee

☐ Small entity-fee $ _____ (37 CFR 1.17(m)). Applicant claims small entity status. See 37 CFR 1.27.

☐ Other than small entity – fee $ _____ (37 CFR 1.17(m))

2. Reply and/or fee

A. The reply and/or fee to the above-noted Office action in the form of _____(identify type of reply):

☐ has been filed previously on _____.
☐ is enclosed herewith.

B. The issue fee and publication fee (if applicable) of $ _____.

☐ has been paid previously on _____.
☐ is enclosed herewith.

This collection of information is required by 37 CFR 1.137(b). The information is required to obtain or retain a benefit by the public which is to file (and by the USPTO to process) an application. Confidentiality is governed by 35 U.S.C. 122 and 37 CFR 1.11 and 1.14. This collection is estimated to take 1.0 hour to complete, including gathering, preparing, and submitting the completed application form to the USPTO. Time will vary depending upon the individual case. Any comments on the amount of time you require to complete this form and/or suggestions for reducing this burden, should be sent to the Chief Information Officer, U.S. Patent and Trademark Office, U.S. Department of Commerce, P.O. Box 1450, Alexandria, VA 22313-1450. DO NOT SEND FEES OR COMPLETED FORMS TO THIS ADDRESS. **SEND TO: Mail Stop Petition, Commissioner for Patents, P.O. Box 1450, Alexandria, VA 22313-1450.**

If you need assistance in completing the form, call 1-800-PTO-9199 and select option 2.

Under the Paperwork Reduction Act of 1995, no persons are required to respond to a collection of information unless it displays a valid OMB control number.

3. Terminal disclaimer with disclaimer fee

☐ Since this utility/plant application was filed on or after June 8, 1995, no terminal disclaimer is required.

☐ A terminal disclaimer (and disclaimer fee (37 CFR 1.20(d)) of $ _____ for a small entity or $ _____ for other than a small entity) disclaiming the required period of time is enclosed herewith (see PTO/SB/63).

4. STATEMENT: The entire delay in filing the required reply from the due date for the required reply until the filing of a grantable petition under 37 CFR 1.137(b) was unintentional. [NOTE: The United States Patent and Trademark Office may require additional information if there is a question as to whether either the abandonment or the delay in filing a petition under 37 CFR 1.137(b) was unintentional (MPEP 711.03(c), subsections (III)(C) and (D)).]

WARNING:

Petitioner/applicant is cautioned to avoid submitting personal information in documents filed in a patent application that may contribute to identity theft. Personal information such as social security numbers, bank account numbers, or credit card numbers (other than a check or credit card authorization form PTO-2038 submitted for payment purposes) is never required by the USPTO to support a petition or an application. If this type of personal information is included in documents submitted to the USPTO, petitioners/applicants should consider redacting such personal information from the documents before submitting them to the USPTO. Petitioner/applicant is advised that the record of a patent application is available to the public after publication of the application (unless a non-publication request in compliance with 37 CFR 1.213(a) is made in the application) or issuance of a patent. Furthermore, the record from an abandoned application may also be available to the public if the application is referenced in a published application or an issued patent (see 37 CFR 1.14). Checks and credit card authorization forms PTO-2038 submitted for payment purposes are not retained in the application file and therefore are not publicly available.

Signature	Date
Typed or printed name	Registration Number, if applicable
Address	Telephone Number
Address	

Enclosures: ☐ Fee Payment

☐ Reply

☐ Terminal Disclaimer Form

☐ Additional sheets containing statements establishing unintentional delay

☐ Other: _____

CERTIFICATE OF MAILING OR TRANSMISSION [37 CFR 1.8(a)]

I hereby certify that this correspondence is being:

☐ Deposited with the United States Postal Service on the date shown below with sufficient postage as first class mail in an envelope addressed to: Mail Stop Petition, Commissioner for Patents, P. O. Box 1450, Alexandria, VA 22313-1450.

☐ Transmitted by facsimile on the date shown below to the United States Patent and Trademark Office as (571) 273-8300.

Date	Signature
	Typed or printed name of person signing certificate

Privacy Act Statement

The **Privacy Act of 1974 (P.L. 93-579)** requires that you be given certain information in connection with your submission of the attached form related to a patent application or patent. Accordingly, pursuant to the requirements of the Act, please be advised that: (1) the general authority for the collection of this information is 35 U.S.C. 2(b)(2); (2) furnishing of the information solicited is voluntary; and (3) the principal purpose for which the information is used by the U.S. Patent and Trademark Office is to process and/or examine your submission related to a patent application or patent. If you do not furnish the requested information, the U.S. Patent and Trademark Office may not be able to process and/or examine your submission, which may result in termination of proceedings or abandonment of the application or expiration of the patent.

The information provided by you in this form will be subject to the following routine uses:

1. The information on this form will be treated confidentially to the extent allowed under the Freedom of Information Act (5 U.S.C. 552) and the Privacy Act (5 U.S.C 552a). Records from this system of records may be disclosed to the Department of Justice to determine whether disclosure of these records is required by the Freedom of Information Act.
2. A record from this system of records may be disclosed, as a routine use, in the course of presenting evidence to a court, magistrate, or administrative tribunal, including disclosures to opposing counsel in the course of settlement negotiations.
3. A record in this system of records may be disclosed, as a routine use, to a Member of Congress submitting a request involving an individual, to whom the record pertains, when the individual has requested assistance from the Member with respect to the subject matter of the record.
4. A record in this system of records may be disclosed, as a routine use, to a contractor of the Agency having need for the information in order to perform a contract. Recipients of information shall be required to comply with the requirements of the Privacy Act of 1974, as amended, pursuant to 5 U.S.C. 552a(m).
5. A record related to an International Application filed under the Patent Cooperation Treaty in this system of records may be disclosed, as a routine use, to the International Bureau of the World Intellectual Property Organization, pursuant to the Patent Cooperation Treaty.
6. A record in this system of records may be disclosed, as a routine use, to another federal agency for purposes of National Security review (35 U.S.C. 181) and for review pursuant to the Atomic Energy Act (42 U.S.C. 218(c)).
7. A record from this system of records may be disclosed, as a routine use, to the Administrator, General Services, or his/her designee, during an inspection of records conducted by GSA as part of that agency's responsibility to recommend improvements in records management practices and programs, under authority of 44 U.S.C. 2904 and 2906. Such disclosure shall be made in accordance with the GSA regulations governing inspection of records for this purpose, and any other relevant (*i.e.*, GSA or Commerce) directive. Such disclosure shall not be used to make determinations about individuals.
8. A record from this system of records may be disclosed, as a routine use, to the public after either publication of the application pursuant to 35 U.S.C. 122(b) or issuance of a patent pursuant to 35 U.S.C. 151. Further, a record may be disclosed, subject to the limitations of 37 CFR 1.14, as a routine use, to the public if the record was filed in an application which became abandoned or in which the proceedings were terminated and which application is referenced by either a published application, an application open to public inspection or an issued patent.
9. A record from this system of records may be disclosed, as a routine use, to a Federal, State, or local law enforcement agency, if the USPTO becomes aware of a violation or potential violation of law or regulation.

UNITED STATES PATENT AND TRADEMARK OFFICE

Commissioner for Patents
United States Patent and Trademark Office
P.O. Box 1450
Alexandria, VA 22313-1450
www.uspto.gov
DIW Jul-06

VLADIMIR ZEMLYAKOV
20 EMERSON COURT
NORTH ANDOVER MA 01845

COPY MAILED
JUL 1 1 2006
OFFICE OF PETITIONS

In re Application of	:	
Zemlyakov et al.	:	
Application No. 10/017,280	:	ON PETITION
Filed: 7 December, 2001	:	
For: UPPER EXTREMITY	:	
EXOSKELETON STRUCTURE AND	:	
METHOD	:	

This is a decision in reference to the paper filed on 25 May, 2006, which is treated as a renewed petition to withdraw the holding of abandonment.

This application became abandoned on 7 November, 2003, for failure to timely file corrected drawings as required by the Notice of Allowability mailed on 6 August, 2003, which set a three (3) month statutory period for reply. Notice of Abandonment was mailed on 3 June, 2004. The petition to withdraw the holding of abandonment filed on 21 June, 2004, was dismissed on 30 March, 2006.

Petitioners state, in the renewed petition

1. The Office of Petitions letter informs Applicants that the Petition is dismissed because Applicants did not file a response to the Interview Summary with Notice of Allowability, and therefore, Applicants failed to file a timely reply as required. As well, the Office of Petitions Letter asserts "Petitioners should have filed a separate reply to the Notice of Allowability". Further, the Letter cites the statement from the Interview Summary, "THE FORMAL WRITTEN REPLY TO THE LAST OFFICE ACTION MUST INCLUDE THE SUBSTANCE OF THE INTERVIEW. APPLICANT IS GIVEN ONE MONTH FROM THIS INTERVIEW DATE, OR THE MAILING DATE OF THIS INTERVIEW SUMMARY, WHICHEVER IS LATER, TO FILE A STATEMENT OF THE SUBSTANCE OF THE INTERVIEW."

> But the Interview Summary is formalized statement of the Interview, and the Notice of Allowability is formalized conclusions of the Interview. So the Interview is primary.
>
> 2. Applicant had the Telephone Interview with Examiner on August 5, 2003. Examiner and Applicants discussed requirements and details comprising in the non-final Office action mailed on July 16, 2003, and an agreement was reached. According to statement above, Applicants had a choice to either send formal response just after the Interview date, or wait for receiving of this Interview Summary that was later. Applicants' reply including the substance of the interview was sent on August 7, 2003 immediately after Interview date prior to the Interview Summary with the Notice of Allowability. The Interview Summary was mailed by the Office on August 6, 2003 and received by Applicants several days later. Therefore, Applicants could not wait for receiving of this Interview Summary and reply to the Notice of Allowability separately. So, Applicants respectfully assert that the formal reply, including the correct drawings, was sent timely.

Petitioners' argument has been carefully considered, but is not persuasive. As stated in the decision mailed on 30 March, 2006, the Interview Summary mailed with the Notice of Allowability states that a response to the Interview Summary is required to be filed within one month of the date of the interview or the mailing of the Interview Summary, whichever is later. Petitioner concededly failed to respond to the Interview Summary. Petitioners' argument in paragraph 1, above, is, in essence, that nothing was required to be filed in response to the Interview Summary because a response had already been filed in response to the Office action mailed on 16 July, 2003. This argument lacks merit, however, because the Interview Summary clearly stated that a reply thereto was required to be filed, regardless of whether applicants believed that all of the examiner's requirements had already been fulfilled.

Further, with regard to paragraph 2, there is no showing in the written record that the examiner agreed that no reply to the Examiner's Interview was required. As MPEP 711.03(c) states, a delay caused by an applicant's lack of knowledge or improper application of the patent statute, rules of practice or the MPEP is not rendered "unavoidable" due to: (A) the applicant's reliance upon oral advice from USPTO employees; or (B) the

USPTO's failure to advise the applicant of any deficiency in sufficient time to permit the applicant to take corrective action. See In re Sivertz, 227 USPQ 255, 256 (Comm'r Pat. 1985). Additionally, a review of the paper filed with a certificate of mailing date of 7 August, 2003, reveals that the paper does not indicate that it was filed in response to the Interview of 5 August, 2003, but rather in response to the Office action mailed on 16 July, 2003. As such, petitioner cannot plausibly claim, at this late date, that the paper with a certificate of mailing dated 7 August, 2003, was filed in response to both the non-final Office action mailed on 16 July, 2003, and the Examiner's interview held on 5 August, 2003. It is further noted that petitioners' assertion that "[a]pplicants could not wait for receiving of the Interview Summary and reply to the Notice of Allowability separately" is unsupported because the Interview Summary was mailed with the Notice of Allowability, and a reply to each could have been filed concurrently.

Lastly, assuming, *arguendo*, that the response was timely, the response was still incomplete, as drawings in compliance with 37 CFR 1.84 or 1.1.52 were never filed. As stated previously, corrected drawings are required, and the application could not have been issued as a patent using the drawings filed to date.

As such, the showing of record is that the abandonment resulted from the failure of petitioners to respond to the Notice of Allowability, rather than an error on the part of the USPTO.

As such the application is properly held abandoned.

The petition is again **DISMISSED.**

Petitioners are strongly advised to consider filing a petition to revive under 37 C.F.R. 1.137(b).

Any request for reconsideration must be filed within **TWO (2) MONTHS** of the date of this decision.

Further correspondence with respect to this matter should be addressed as follows:

By mail: Mail Stop Petition
Commissioner for Patents
P.O. Box 1450
Alexandria, VA 22313-1450

By FAX: (571) 273-8300
Attn: Office of Petitions

By hand: Customer Service Window
Mail Stop Petition
Randolph Building
401 Dulany Street
Alexandria, VA 22314

Telephone inquiries related to this decision should be directed to the undersigned at 571-272-3231.

DWood

Douglas I. Wood
Senior Petitions Attorney
Office of Petitions

UNITED STATES PATENT AND TRADEMARK OFFICE

Commissioner for Patents
United States Patent and Trademark Office
P.O. Box 1450
Alexandria, VA 22313-1450
www.uspto.gov
DIW Nov-06

VLADIMIR ZEMLYAKOV
20 EMERSON COURT
NORTH ANDOVER MA 01845

COPY MAILED
NOV 14 2006
OFFICE OF PETITIONS

In re Application of	:	
Zemlyakov et al.	:	LETTER DISMISSING PETITION
Application No. 10/017,280	:	
Filed: 7 December, 2001	:	
For: UPPER EXTREMITY	:	
EXOSKELETON STRUCTURE AND	:	
METHOD	:	

This is a decision in reference to the letter filed on 7 September, 2006, which is treated as a renewed petition to withdraw the holding of abandonment.

This application became abandoned on 7 November, 2003, for failure to timely file corrected drawings as required by the Notice of Allowability mailed on 6 August, 2003, which set a three (3) month statutory period for reply. Notice of Abandonment was mailed on 3 June, 2004. The petition to withdraw the holding of abandonment filed on 21 June, 2004, was dismissed on 30 March, 2006. The petition filed on 25 May, 2006, was dismissed on 11 July, 2006.

The petition cannot be considered on the merits because it is not properly signed. Specifically, 37 CFR 1.4 requires that all papers filed in the USPTO must be signed by either a registered patent attorney or all of the inventors in an application. As this application contains an executed declaration listing Vladimir Zemlyakov and Pactrick McDonough as the joint inventors, the petition must be signed by both inventors or their registered patent attorney.

Petitioners request that the holding of abandonment be withdrawn "because Applicants have sent the formal reply including the substance of the Interview with correct drawings in timely, mailed August 7, 2003, and Issue and Publication Fees ($950.00) mailed September 17, 2003."

Petitioner's argument has been considered, but is not persuasive. As stated in the Decision on Petition mailed on 30 March, 2006, and 11 July, 2006, applicants were required to file a response in reply to the Interview Summary mailed on 6 August, 2003, but applicants failed so to do. Applicants statement that "[T]he Interview is primary, for which Applicants mailed [a] formal response," is not persuasive because applicants clearly failed to file a response to the Interview Summary. As previously stated, a timely response to the Interview Summary was **required** to be filed, regardless of whether applicants believed that their prior response had satisfied the issues raised during the interview.

Further, it is noted in paragraph 3 of the present request for reconsideration that petitioners state that a reply was filed on 7 August, 2003, addressing the drawing deficiencies noted in the non-final Office action mailed on 16 July, 2003. Petitioners further state that "Applicants claim that Certificate of Mail dated 7 August, 2003, and date of mailing clearly indicate that that Applicant's reply was sent in response to the Examiner's interview held on 5 August, 2003. Really, if the letter was mailed after the Interview date, the letter was the response for that action." This argument lacks merit because the transmittal letter states that the reply mailed on 7 August, 2003, was in response to the Office action mailed on 16 July, 2003, not the Examiner's Interview Summary mailed on 6 August, 2003. The showing of record is that no response to the Interview Summary was ever filed, as required.

As such, the showing of record is that the abandonment resulted from the failure of petitioners to provide corrected drawings in response to the Interview Summary, rather than an error on the part of the USPTO.

As such the application is properly held abandoned.

It is further noted that proper drawings have still not been received. Corrected drawings should be filed with any renewed petition.

The petition is again **DISMISSED.**

Petitioners are **strongly advised** to file a petition to revive under 37 C.F.R. 1.137(b), along with corrected drawings.

Any request for reconsideration must be filed within **TWO (2) MONTHS** of the date of this decision.

Further correspondence with respect to this matter should be addressed as follows:

By mail: Mail Stop Petition
Commissioner for Patents
P.O. Box 1450
Alexandria, VA 22313-1450

By FAX: (571) 273-8300
Attn: Office of Petitions

By hand: Customer Service Window
Mail Stop Petition
Randolph Building
401 Dulany Street
Alexandria, VA 22314

Telephone inquiries related to this decision should be directed to the undersigned at 571-272-3231.

D Wood

Douglas I. Wood
Senior Petitions Attorney
Office of Petitions

Encl: Form PTO/SB/64

PTO/SB/64 (09-06)
Approved for use through 03/31/2007. OMB 0651-0031
U.S. Patent and Trademark Office; U.S. DEPARTMENT OF COMMERCE
Under the Paperwork Reduction Act of 1995, no persons are required to respond to a collection of information unless it displays a valid OMB control number.

PETITION FOR REVIVAL OF AN APPLICATION FOR PATENT ABANDONED UNINTENTIONALLY UNDER 37 CFR 1.137(b)

Docket Number (Optional)

First named inventor:

Application No.: Art Unit:

Filed: Examiner:

Title:

Attention: Office of Petitions
Mail Stop Petition
Commissioner for Patents
P.O. Box 1450
Alexandria, VA 22313-1450
FAX (571) 273-8300

NOTE: If information or assistance is needed in completing this form, please contact Petitions Information at (571) 272-3282.

The above-identified application became abandoned for failure to file a timely and proper reply to a notice or action by the United States Patent and Trademark Office. The date of abandonment is the day after the expiration date of the period set for reply in the office notice or action plus an extensions of time actually obtained.

APPLICANT HEREBY PETITIONS FOR REVIVAL OF THIS APPLICATION

NOTE: A grantable petition requires the following items:
(1) Petition fee;
(2) Reply and/or issue fee;
(3) Terminal disclaimer with disclaimer fee - required for all utility and plant applications filed before June 8, 1995; and for all design applications; and
(4) Statement that the entire delay was unintentional.

1. Petition fee

☐ Small entity-fee $ _____ (37 CFR 1.17(m)). Applicant claims small entity status. See 37 CFR 1.27.

☐ Other than small entity – fee $ _____ (37 CFR 1.17(m))

2. Reply and/or fee

A. The reply and/or fee to the above-noted Office action in the form of _____(identify type of reply):

☐ has been filed previously on _____.
☐ is enclosed herewith.

B. The issue fee and publication fee (if applicable) of $ _____.

☐ has been paid previously on _____.
☐ is enclosed herewith.

This collection of information is required by 37 CFR 1.137(b). The information is required to obtain or retain a benefit by the public which is to file (and by the USPTO to process) an application. Confidentiality is governed by 35 U.S.C. 122 and 37 CFR 1.11 and 1.14. This collection is estimated to take 1.0 hour to complete, including gathering, preparing, and submitting the completed application form to the USPTO. Time will vary depending upon the individual case. Any comments on the amount of time you require to complete this form and/or suggestions for reducing this burden, should be sent to the Chief Information Officer, U.S. Patent and Trademark Office, U.S. Department of Commerce, P.O. Box 1450, Alexandria, VA 22313-1450. DO NOT SEND FEES OR COMPLETED FORMS TO THIS ADDRESS. **SEND TO: Mail Stop Petition, Commissioner for Patents, P.O. Box 1450, Alexandria, VA 22313-1450.**

If you need assistance in completing the form, call 1-800-PTO-9199 and select option 2.

Under the Paperwork Reduction Act of 1995, no persons are required to respond to a collection of information unless it displays a valid OMB control number.

3. Terminal disclaimer with disclaimer fee

☐ Since this utility/plant application was filed on or after June 8, 1995, no terminal disclaimer is required.

☐ A terminal disclaimer (and disclaimer fee (37 CFR 1.20(d)) of $ _____ for a small entity or $ _____ for other than a small entity) disclaiming the required period of time is enclosed herewith (see PTO/SB/63).

4. STATEMENT: The entire delay in filing the required reply from the due date for the required reply until the filing of a grantable petition under 37 CFR 1.137(b) was unintentional. [NOTE: The United States Patent and Trademark Office may require additional information if there is a question as to whether either the abandonment or the delay in filing a petition under 37 CFR 1.137(b) was unintentional (MPEP 711.03(c), subsections (III)(C) and (D)).]

WARNING:

Petitioner/applicant is cautioned to avoid submitting personal information in documents filed in a patent application that may contribute to identity theft. Personal information such as social security numbers, bank account numbers, or credit card numbers (other than a check or credit card authorization form PTO-2038 submitted for payment purposes) is never required by the USPTO to support a petition or an application. If this type of personal information is included in documents submitted to the USPTO, petitioners/applicants should consider redacting such personal information from the documents before submitting them to the USPTO. Petitioner/applicant is advised that the record of a patent application is available to the public after publication of the application (unless a non-publication request in compliance with 37 CFR 1.213(a) is made in the application) or issuance of a patent. Furthermore, the record from an abandoned application may also be available to the public if the application is referenced in a published application or an issued patent (see 37 CFR 1.14). Checks and credit card authorization forms PTO-2038 submitted for payment purposes are not retained in the application file and therefore are not publicly available.

Signature	Date
Typed or printed name	Registration Number, if applicable
Address	Telephone Number
Address	

Enclosures:
- ☐ Fee Payment
- ☐ Reply
- ☐ Terminal Disclaimer Form
- ☐ Additional sheets containing statements establishing unintentional delay
- ☐ Other: _____

CERTIFICATE OF MAILING OR TRANSMISSION [37 CFR 1.8(a)]

I hereby certify that this correspondence is being:

☐ Deposited with the United States Postal Service on the date shown below with sufficient postage as first class mail in an envelope addressed to: Mail Stop Petition, Commissioner for Patents, P. O. Box 1450, Alexandria, VA 22313-1450.

☐ Transmitted by facsimile on the date shown below to the United States Patent and Trademark Office at (571) 273-8300.

Date	Signature
	Typed or printed name of person signing certificate

Privacy Act Statement

The **Privacy Act of 1974 (P.L. 93-579)** requires that you be given certain information in connection with your submission of the attached form related to a patent application or patent. Accordingly, pursuant to the requirements of the Act, please be advised that: (1) the general authority for the collection of this information is 35 U.S.C. 2(b)(2); (2) furnishing of the information solicited is voluntary; and (3) the principal purpose for which the information is used by the U.S. Patent and Trademark Office is to process and/or examine your submission related to a patent application or patent. If you do not furnish the requested information, the U.S. Patent and Trademark Office may not be able to process and/or examine your submission, which may result in termination of proceedings or abandonment of the application or expiration of the patent.

The information provided by you in this form will be subject to the following routine uses:

1. The information on this form will be treated confidentially to the extent allowed under the Freedom of Information Act (5 U.S.C. 552) and the Privacy Act (5 U.S.C 552a). Records from this system of records may be disclosed to the Department of Justice to determine whether disclosure of these records is required by the Freedom of Information Act.
2. A record from this system of records may be disclosed, as a routine use, in the course of presenting evidence to a court, magistrate, or administrative tribunal, including disclosures to opposing counsel in the course of settlement negotiations.
3. A record in this system of records may be disclosed, as a routine use, to a Member of Congress submitting a request involving an individual, to whom the record pertains, when the individual has requested assistance from the Member with respect to the subject matter of the record.
4. A record in this system of records may be disclosed, as a routine use, to a contractor of the Agency having need for the information in order to perform a contract. Recipients of information shall be required to comply with the requirements of the Privacy Act of 1974, as amended, pursuant to 5 U.S.C. 552a(m).
5. A record related to an International Application filed under the Patent Cooperation Treaty in this system of records may be disclosed, as a routine use, to the International Bureau of the World Intellectual Property Organization, pursuant to the Patent Cooperation Treaty.
6. A record in this system of records may be disclosed, as a routine use, to another federal agency for purposes of National Security review (35 U.S.C. 181) and for review pursuant to the Atomic Energy Act (42 U.S.C. 218(c)).
7. A record from this system of records may be disclosed, as a routine use, to the Administrator, General Services, or his/her designee, during an inspection of records conducted by GSA as part of that agency's responsibility to recommend improvements in records management practices and programs, under authority of 44 U.S.C. 2904 and 2906. Such disclosure shall be made in accordance with the GSA regulations governing inspection of records for this purpose, and any other relevant (*i.e.*, GSA or Commerce) directive. Such disclosure shall not be used to make determinations about individuals.
8. A record from this system of records may be disclosed, as a routine use, to the public after either publication of the application pursuant to 35 U.S.C. 122(b) or issuance of a patent pursuant to 35 U.S.C. 151. Further, a record may be disclosed, subject to the limitations of 37 CFR 1.14, as a routine use, to the public if the record was filed in an application which became abandoned or in which the proceedings were terminated and which application is referenced by either a published application, an application open to public inspection or an issued patent.
9. A record from this system of records may be disclosed, as a routine use, to a Federal, State, or local law enforcement agency, if the USPTO becomes aware of a violation or potential violation of law or regulation.

UNITED STATES PATENT AND TRADEMARK OFFICE

Commissioner for Patents
United States Patent and Trademark Office
P.O. Box 1450
Alexandria, VA 22313-1450
www.uspto.gov

VLADIMIR ZEMLYAKOV
20 EMERSON COURT
NORTH ANDOVER MA 01845

COPY MAILED

MAR 2 5 2009

OFFICE OF PETITIONS

In re Application of Zemelyakov et al. Application Number: 10/017280 Filing Date: 12/07/2001 For: UPPER EXTREMITY EXOSKELETON STRUCTURE AND METHOD	: : : : : : :	ON PETITION

This is a decision in reference to the letter filed on January 5, 2007, which is treated as a renewed petition to withdraw the holding of abandonment.

The petition is again **DISMISSED**.

This application became abandoned on November 7, 2003, for failure to timely submit corrected drawings and respond to the examiner's interview sent with the Notice of Allowability mailed on August 6, 2003, which set a three (3)-month statutory period for reply. Notice of Abandonment was mailed on June 3, 2004.

On June 21, 2004, a petition to withdraw the holding of abandonment was filed. On March 30, 2006, the petition was dismissed. On May 25, 2006, a renewed petition to withdraw the holding of abandonment was filed. On July 11, 2006, the petition was again dismissed. On September 7, 2006, a paper styled as a petition, signed by only one inventor, was filed, requesting withdrawal of the holding of abandonment. On November 14, 2006, a letter in response was mailed, stating the petition was again dismissed. On January 5, 2007, the subject petition was filed.[1]

[1] A status request was filed on October 17, 2007, and on February 17, 2009.

Applicants argue, in pertinent part, that the holding of abandonment should be withdrawn because a proper and timely response to the Interview Summary was in fact filed.

Petitioners essentially argue that the amendment, including drawings, which petitioners has shown was filed on August 7, 2003 (certificate of mailing date), sufficed as both a response to the non-final Office action mailed on July 16, 2003, and to the Interview Summary mailed on August 6, 2003, with the Notice of Allowability.

Petitioners' argument has been considered, but is not persuasive. Assuming, *arguendo*, the drawings filed with a certificate of mailing were timely filed, petitioners were notified in the decision on petition mailed on March 30, 2006, that the drawings are not in compliance with 37 CFR 1.84 and 1.152. As such, corrected drawings are required, and the application could not have issued as a patent using the drawings filed to date. As petitioner has not shown that proper drawings were filed prior to the expiration of the period for reply to the Notice of Allowability, the application became abandoned for failure to submit proper drawings in response to the Notice of Allowability mailed on August 6, 2003. Petitioners were advised in the decision mailed on March 30, 2006, of the need for new corrected drawings.

In this regard, 35 U.S.C. 133 states:

> Upon failure of the applicant to prosecute the application within six months after any action therein, of which notice has been given or mailed to the applicant, or within such shorter time, not less than thirty days, as fixed by the Director in such action, the application shall be regarded as abandoned by the parties thereto, unless it be shown to the satisfaction of the Director that such delay was unavoidable.

As petitioners failed to provide proper drawings within the time period provided in the Notice of Allowability, the application is abandoned.

Further, with regard to petitioners' argument that the Office had accepted certain papers from the applicant that were not signed by both *pro se* applicants, although the USPTO attempts to notify parties as to defective papers in order to permit timely refiling, it has no obligation to do so. See In Re Columbo, Inc., 33 USPQ2d 1530, 1532 (Comm'r Pat. 1994). Rather it is the

applicants who are ultimately responsible for filing proper documents. Id.

Any request for reconsideration must be filed within **TWO MONTHS** of the date of this decision. **This period may not be extended.**[2]

ALTERNATIVE VENUE

Petitioners are strongly advised to consider filing a petition under 37 CFR 1.137(b), which now provides that where the delay in reply was unintentional, a petition may be filed to revive an abandoned application or a lapsed patent pursuant to 37 CFR 1.137(b). A grantable petition pursuant to 37 CFR 1.137(b) must be accompanied by:

(1) the required reply, unless previously filed. In a nonprovisional application abandoned for failure to prosecute, the required reply may be met by the filing of a continuing application. In a nonprovisional utility or plant application filed on or after 8 June, 1995, and abandoned for failure to prosecute, the required reply may also be met by the filing of a request for continued examination in compliance with § 1.114. In an application or patent, abandoned or lapsed for failure to pay the issue fee or any portion thereof, the required reply must be the payment of the issue fee or any outstanding balance thereof. In an application, abandoned for failure to pay the publication fee, the required reply must include payment of the publication fee.

(2) the petition fee as set forth in 37 CFR 1.17(m);

(3) a statement that the entire delay in filing the required reply from the due date for the reply until the filing of a grantable petition pursuant to 37 CFR 1.137(b) was unintentional. The Director may required additional information where there is a question whether the delay was unintentional; and

(4) any terminal disclaimer (and fee as set forth in 37 CFR 1.20(d)) required pursuant to 37 CFR 1.137(c)).

A person seeking revival due to unintentional delay cannot make a statement that the delay was unintentional unless the entire delay, including the delay from the date it was discovered that the application was abandoned until the filing of the petition to revive under 37 CFR 1.137(b), was unintentional. A statement that the delay was unintentional is not appropriate if petitioner intentionally delayed the filing of a petition for revival under 37 CFR 1.137(b).

---

[2] 37 CFR 1.181(f).

The filing of a petition under the unintentional standard cannot be intentionally delayed and therefore should be filed promptly.

A copy of the form for filing a petition under 37 CFR 1.137(b) to revive an application unintentionally abandoned is enclosed herewith for petitioners' convenience. The petition fee is currently $810.00 for a small entity.

Further correspondence with respect to this matter should be addressed as follows:

By mail: Mail Stop Petitions
Commissioner for Patents
P.O. Box 1450
Alexandria, VA 22313-1450

By FAX: (571) 273-8300
Attn: Office of Petitions

By hand: Customer Service Window
Mail Stop Petitions
Randolph Building
401 Dulany Street
Alexandria, VA 22314

Telephone inquiries concerning this matter may be directed to the undersigned at (571) 272-3231.

D Wood

Douglas I. Wood
Senior Petitions Attorney
Office of Petitions

Encl: PTO/SB/64

UNITED STATES PATENT AND TRADEMARK OFFICE

COMMISSIONER FOR PATENTS
UNITED STATES PATENT AND TRADEMARK OFFICE
P.O. BOX 1450
ALEXANDRIA, VA 22313-1450
www.uspto.gov

VLADIMIR ZEMLYAKOV
9 GEORGIAN COURT
BASKING RIDGE NJ 07920

MAILED

AUG 13 2009

OFFICE OF PETITIONS

In re Application of :
Zemelyakov et al. :
Application Number: 10/017280 :
Filing Date: 12/07/2001 :
For: UPPER EXTREMITY :
EXOSKELETON STRUCTURE AND :
METHOD :

ON PETITION

This is a decision in reference to the letter filed on May 21, 2009, which is treated as a renewed petition to withdraw the holding of abandonment.

The petition is **DENIED**. This decision may be viewed as a final agency action within the meaning of 5 U.S.C. § 704 for purposes of seeking judicial review. See MPEP 1002.02.

BACKGROUND

This application became abandoned on November 7, 2003, for failure to timely submit corrected drawings and respond to the examiner's amendment sent with the Notice of Allowability mailed on August 6, 2003, which set a three (3)-month statutory period for reply. Notice of Abandonment was mailed on June 3, 2004.

On June 21, 2004, a petition to withdraw the holding of abandonment was filed. On March 30, 2006, the petition was dismissed. On May 25, 2006, a renewed petition to withdraw the holding of abandonment was filed. On July 11, 2006, the petition was again dismissed. On September 7, 2006, a paper styled as a petition, signed by only one inventor, was filed, requesting withdrawal of the holding of abandonment. On November 14, 2006, a letter in response was mailed, stating the petition was again dismissed. On January 5, 2007, a renewed petition was filed.[1] A status letter was filed on February 17, 2009, along with a paper

[1] A status request was filed on October 17, 2007, and on February 17, 2009.

signed only by inventor Zemlyakov requesting that the correspondence address be changed. On March 25, 2009, the petition was again dismissed.

On May 21, 2009, the subject renewed petition was filed. In the subject renewed petition, petitioners assert:

1. Applicants had never stated, "a proper and timely response to the Interview Summary was in fact filed" by the Patent Office. Applicants had only stated that the Applicants' response including the drawings was sent on August 7, 2003 and received by the Patent Office. But the Applicants' response was not filed by the Patent Office in proper time because, unfortunately, the response to the Interview Summary was lost into the Patent Office. Applicants would like to note again that if the response was filed by the Patent Office in proper time it was not [*sic*] problem with failure to timely file corrected drawings.

2. The Office of Petitions in this letter states, "Petitioners' argument has been considered, but is not persuasive. Assuming, *arguendo*, the drawings filed with a certificate of mailing were timely filed, petitioners were notified in the decision on petition mailed on March 30, 2006, that the drawings are not in compliance with 37 CFR 1.84 and 1.152. As such, corrected drawings are required, and the application could not have issued as a patent using the drawings filed to date."

Applicants would like to remind [*sic*] again that corrected drawings, according to requirements of the Notice of Draftsperson's Patent Drawing Review contained in the decision on petition mailed on March 30, 2006, were filed by Patent Office on May 25, 2006. Because Applicants had not received after that any comments on corrected drawings from the Patent Office, the drawings are in compliance with 37 CFR 1.84 and 1.152, and the application can be issued as a patent.

3. Applicants would like to remind that correspondence address of Vladimir Zemlyakov that is prosecuting the application process was changed and filed by the Patent Office on February, 17. 2009. Please, use new correspondence address that is: 9 Georgian Court, Basking Ridge, N.J. 07920.

4. Applicants again have not found arguments to revive the Patent Application and pay additional fee. Applicants would like to repeat that the Patent Office has the drawings that are in compliance with 37 CFR 1.84 and 1.152, which were filed by the Patent Office on May 25, 2006.

LAW AND REGULATION

35 U.S.C. 133 states:

> Upon failure of the applicant to prosecute the application within six months after any action therein, of which notice has been given or mailed to the applicant, or within such shorter time, not less than thirty days, as fixed by the Director in such action, the application shall be regarded as abandoned by the parties thereto, unless it be shown to the satisfaction of the Director that such delay was unavoidable.

37 CFR 1.133(b) states:

> In every instance where reconsideration is requested in view of an interview with an examiner, a complete written statement of the reasons presented at the interview as warranting favorable action must be filed by the applicant. An interview does not remove the necessity for reply to Office actions as specified in § § 1.111 and 1.135.

37 CFR 1.134 states:

> An Office action will notify the applicant of any non-statutory or shortened statutory time period set for reply to an Office action. Unless the applicant is notified in writing that a reply is required in less than six months, a maximum period of six months is allowed.

37 CFR 1.135 states:

> (a) If an applicant of a patent application fails to reply within the time period provided under § 1.134 and § 1.136, the application will become abandoned unless an Office action indicates otherwise.
>
> (b) Prosecution of an application to save it from abandonment pursuant to paragraph (a) of this section must include such complete and proper reply as the condition of the application may require.

OPINION

Preliminarily, receipt of the paper titled as a "change of correspondence address" filed on February 17, 2009, is acknowledged. The request to change the correspondence address filed on February 17, 2009, cannot be entered, however, because it is not properly signed. Specifically, inventor Patrick McDonough's signature is missing from the request. 37 CFR 1.33(a)(2) requires that a change of correspondence address request be signed by all of the inventors or a registered patent practitioner. Nevertheless, as the subject petition contains a proper request to change the correspondence address, the address has been updated.

Petitioners essentially argue that the amendment, including drawings, which petitioners have shown was filed on August 7, 2003 (certificate of mailing date), sufficed as both a response to the non-final Office action mailed on July 16, 2003, and to the Interview Summary mailed on August 6, 2003, with the Notice of Allowability.

Petitioners' argument has been considered, but is not persuasive. Assuming, *arguendo*, that no new drawings were required as a result of the Interview Summary, the petitioners would be required nonetheless to file a statement of the substance of the interview unless otherwise directed in the Interview Summary.

In this regard, it is noted that the Interview Summary stated, in pertinent part:

> THE FORMAL WRITTEN REPLY TO THE LAST OFFICE ACTION MUST INCLUDE THE SUBSTANCE OF THE INVERVIEW (See MPEP 713.04). **If a reply to the last Office action has already been filed, APPLICANT IS GIVEN ONE MONTH FROM THIS INTERVIEW DATE, OR THE MAILING OF THIS INTERVIEW SUMMARY, WHICHEVER IS LATER, TO FILE A STATEMENT OF THE SUBSTANCE OF THE INTERVIEW.**
>
> (emphasis added)

The amendment filed on August 7, 2003 (certificate of mailing date) states that it is "[i]n response to the Office Letter mailed 2003, July 16." There is no mention of the interview summary of August 6, 2003, no discussion of the substance of the

interview, or statement that the reply filed with a certificate of mailing dated August 7, 2003, is in response to the interview. To this end, there is simply no indication from the paper filed that it was in any way intended to be a statement of the substance of the interview.

Simply put, the reply filed on August 7, 2003 (certificate of mailing date) was a reply to the non-final Office action mailed on July 16, 2003. The mere fact that the reply with the certificate of mailing dated August 7, 2003 was filed after the date the examiner's interview was held, and the Interview Summary mailed, does not, in itself, lead to a conclusion that the paper was filed in response to the Interview Summary in the absence of indicia on the paper itself that the paper filed with a certificate of mailing dated August 7, 2003, was, in fact filed in response to the Interview Summary.

As was stated in the decision mailed on July 11, 2006:

> MPEP 711.03(c) states, a delay caused by an applicant's lack of knowledge or improper application of the patent statute, rules of practice or the MPEP is not rendered "unavoidable" due to: (A) the applicant's reliance upon oral advice from USPTO employees; or (B) the USPTO's failure to advise the applicant of any deficiency in sufficient time to permit the applicant to take corrective action. See In re Sivertz, 227 USPQ 255, 256 (Comm'r Pat. 1985). Additionally, a review of the paper filed with a certificate of mailing date of August 7, 2003, reveals that the paper does not indicate that it was filed in response to the Interview of August 5, 2003, but rather in response to the Office action mailed on July 16, 2003. As such, petitioner cannot plausibly claim, at this late date, that the paper with a certificate of mailing dated August 7, 2003, was filed in response to both the non-final Office action mailed on July 16, 2003, and the Examiner's interview held on August 5, 2003. It is further noted that petitioners' assertion that "[a]pplicants could not wait for receiving of the Interview Summary and reply to the Notice of Allowability separately" is unsupported because the Interview Summary was mailed with the Notice of Allowability, and a reply to each could have been filed concurrently.

In summary, the showing of record is that applicants did not file a response to the Interview Summary mailed on August 6, 2003.

Further, with regard to petitioners' argument that the Office had accepted certain papers from the applicant that were not signed by both *pro se* applicants, although the USPTO attempts to notify parties as to defective papers in order to permit timely refiling, it has no obligation to do so. See In Re Columbo, Inc., 33 USPQ2d 1530, 1532 (Comm'r Pat. 1994). Rather it is the applicants who are ultimately responsible for filing proper documents. Id.

While the Office is mindful that applicant is a *pro se* inventor, such does not excuse petitioner from compliance with Office laws and regulations. Petitioner was not forced, but rather made a conscious decision to prosecute the application *pro se*, and therefore must be held accountable for his actions, or lack thereof, before the Office. There are numerous resources available to petitioner, as have been available to others who have chosen this path of prosecution, to obtain the necessary information to prosecute the application before the Office.

In summary, the showing of record is that petitioner did not file a proper and timely reply to the Interview Summary mailed on August 6, 2003. As such, the application is properly held **abandoned**.

As petitioner has failed, despite repeated attempts, to provide any persuasive arguments meriting withdrawal of the holding of abandonment, the petition must be **denied**.

CONCLUSION

The prior decision, which refused to withdraw the holding of abandonment, has been reconsidered, and is affirmed.

Petitioner is not precluded from filing a petition to revive pursuant to 37 CFR 1.137. However, continued delay in filing such a petition, after this final agency action, may be determined to be intentional delay and may preclude revival of the application.

Telephone inquiries concerning this matter may be directed to Senior Petitions Attorney Douglas I. Wood at (571) 272-3231.

Charles Pearson
Director
Office of Petitions

UNITED STATES PATENT AND TRADEMARK OFFICE

Commissioner for Patents
United States Patent and Trademark Office
P.O. Box 1450
Alexandria, VA 22313-1450
www.uspto.gov

Paper No. 10

KLARQUIST SPARKMAN, LLP
121 S.W. SALMON STREET, SUITE #1600
ONE WORLD TRADE CENTER
PORTLAND OR 97204-2988

COPY MAILED
JUN 2 9 2004
OFFICE OF PETITIONS

In re Application of
Rice, et al.
Application No.: 10/017,323
Filed: December 13, 2001
Attorney Docket No.: 4239-61858
For: BENZOYLALKYLINDOLEPYRIDINIUM COMPOUNDS AND PHARMACEUTICAL COMPOUNDS COMPRISING SUCH COMPOUNDS

DECISION REFUSING STATUS UNDER 37 CFR 1.47(a)

This is a decision on the petition under 37 CFR 1.47(a), filed June 26, 2002 (certificate of mailing date June 20, 2002). The petition was only recently forwarded to the Office of Petitions. The Office apologizes for the delay in addressing the petition.

The petition is **DISMISSED**.

Any request for reconsideration of this decision must be submitted within TWO (2) MONTHS from the mail date of this decision. Extensions of time under 37 CFR 1.136(a) are permitted. Any response should be entitled "Request for Reconsideration of Petition Under 37 CFR 1.47(a)" and may include an oath or declaration executed by the inventor. **Failure to respond will result in abandonment of the application.**

The above-identified application was filed on December 13, 2001 without an executed oath or declaration. Accordingly, on March 20, 2002, a "Notice to File Missing Parts of Nonprovisional Application" was mailed, requiring an executed oath or declaration, the basic filing fee, a surcharge for their late filing, and substitute drawings.

In response, on June 26, 2002 (certificate of mailing date June 20, 2002), a petition for a one month extension of time and required fee, a declaration executed by 6 of 7 joint inventors, the surcharge, the basic filing fee, substitute drawings, and the instant petition and required fee were filed.

A declaration of facts of Stacey C. Slater, attorney for applicants, accompanied the petition. Attorney Slater explains that non-signing joint inventor, Dr. Vadim Makarov, received an e-mail copy of the application and declaration for the above-identified application and expressly refused to sign the declaration for the patent application via e-mail.

A grantable petition under 37 CFR 1.47(a) requires

(1) a petition including proof of the pertinent facts establishing that the joint inventor(s) refuses to join, or cannot be found or reached after diligent effort,
(2) a proper oath or Declaration executed by the available joint inventor(s),
(3) the fee of $130 as specified in 37 CFR § 1.17(h), and
(4) the last known address of the omitted inventor(s).

This petition lacks items (2) and (4) above.

As to item (2), an oath or declaration for the patent application in compliance with 37 CFR 1.63 and 1.64 still has not been presented. The mailing/ post office address of non-signing inventor Makarov is not included on the declaration. The mailing/post office address of each inventor must be included on the oath or declaration. 37 CFR 1.63(c)(1); MPEP 605.03 An e-mail address is not the equivalent of a mailing/post office address. As Dr. Makarov is not executing the declaration, the inventor's most recent home address must be given to enable the Office to communicate directly with the inventor.

All signing inventors must execute another declaration that lists the application serial number and filing date, contains the signers' own information, and lists Dr. Makarov's citizenship, residence, and mailing/post office address. The signing inventors should sign in their respective signature blocks. Dr. Makarov's signature block should be left blank. The Office will interpret this submission as the signing inventors signing the declaration on behalf of Dr. Makarov.

An oath or declaration in compliance with 37 CFR 1.63 and 1.64 signed by the Rule 1.47 applicants on behalf of the non-signing inventor is REQUIRED. See MPEP 409.03(a).

As to item (4), a statement of Dr. Makarov's last known address is missing and required. Further correspondence with respect to this matter should be addressed as follows:

By mail: Mail Stop PETITION
Commissioner for Patents
Post Office Box 1450
Alexandria, VA 22313-1450
ATTN: E. Shirene Willis

By hand: Crystal Plaza 1 Lobby
2011 South Clark Place
Room 1B03
Arlington, VA 22202
ATTN: E. Shirene Willis

By FAX: (703) 872-9306
ATTN: Office of Petitions – E. Shirene Willis

Telephone inquiries should be directed to the undersigned at (703) 308-6712.

E. Shirene Willis

E. Shirene Willis
Senior Petitions Attorney
Office of Petitions

UNITED STATES PATENT AND TRADEMARK OFFICE

Commissioner for Patents
United States Patent and Trademark Office
P.O. Box 1450
Alexandria, VA 22313-1450
www.uspto.gov

HUSCH & EPPENBERGER, LLC
190 CARONDELET PLAZA
SUITE 600
ST. LOUIS, MO 63105-3441

COPY MAILED

NOV 1 0 2004

OFFICE OF PETITIONS

In re Application of
Dosen et al.
Patent No. 6,779,844
Application No. 10/017,334
Filed: December 14, 2001
Issued: August 24, 2004
Attorney Docket No. 41575/29338(115)

ON PETITION

This is a decision on the petition under 37 C.F.R. § 1.183, filed September 1, 2004, to waive the rules and accept the correction of the assignee data on the front page of the above-identified patent. The petition is also being treated as a request under 37 CFR 3.81 to accept the correction of the assignee data.

The petition under 37 CFR 1.183 is **DISMISSED AS MOOT.**

The request under 37 CFR 3.81 is **DISMISSED**.

Effective June 25, 2004, 37 CFR 3.81(b) has been revised to no longer require the correction of the assignee data prior to issuance of the patent. Therefore, a petition to waive the rule is unnecessary. 37 CFR 3.81(b) currently states:

> Any request for issuance of an application in the name of the assignee submitted after the date of payment of the issue fee, and any request for a patent to be corrected to state the name of the assignee, must state that the assignment was submitted for recordation as set forth in § 3.11 before issuance of the patent, and must include a request for a certificate of correction under § 1.323 of this chapter (accompanied by the fee set forth in § 1.20(a)) and the processing fee set forth in § 1.17(i) of this chapter.

In other words, the request under 37 CFR 3.81(b) will be granted when:

(1) a request under 37 CFR 3.81 and the fee set forth in 37 CFR 1.17(i) are filed,
(2) the assignment was submitted for recordation prior to issuance of the patent, and
(3) a request for a certificate of correction and the fee set forth in 37 CFR 1.20(a) are submitted.

Petitioner has failed to meet requirement (3). Accordingly, before the request under 37 CFR 3.81(b) can be granted, a request for a certificate of correction, along with the requisite $100.00 fee, is required.

Further correspondence with respect to this matter should be addressed as follows:

By mail: Mail Stop PETITIONS
Commissioner for Patents
Post Office Box 1450
Alexandria, VA 22313-1450

By hand: Customer Window located at:

U.S. Patent and Trademark Office
220 20th Street S
Customer Window, Mail Stop Petitions
Crystal Plaza Two Lobby, Room 1B03
Arlington, VA 22202

By fax: (703) 872-9306
ATTN: Office of Petitions

Telephone inquiries should be directed to Paralegal Liana Chase at (571) 272-3282.

Charles Steven Brantley
Petitions Attorney
Office of Petitions

UNITED STATES PATENT AND TRADEMARK OFFICE

Commissioner for Patents
United States Patent and Trademark Office
P.O. Box 1450
Alexandria, VA 22313-1450
www.uspto.gov

MYERS BIGEL SIBLEY & SAJOVEC
P.O. BOX 37428
RALEIGH, NC 27627

COPY MAILED

JAN 1 1 2005

OFFICE OF PETITIONS

In re Application of	:	
Glenn A. Rinne et al	:	
Application No. 10/017,350	:	ON PETITION
Filed: December 14, 2001	:	
Attorney Docket No. 9180-10	:	

This is a decision on the petition, filed March 3, 2004, to correct the spelling of the assignee's name from Unitivie International Limited to Unitive International Limited.

The petition is **granted.**

The requested data will be printed on the patent if this can be accomplished without substantial disruption to the issue process. However, it the printing of the patent has progressed to the point where the requested data cannot be included in the printed patent, petitioner can request a Certificate of Correction under 37 CFR 1.322.

This matter is being forwarded to the Publishing Division to be processed into a patent.

Telephone inquiries concerning this matter may be directed to Irvin Dingle at (571) 272-3210.

Irvin Dingle
Petitions Examiner
Office of Petitions
Office of the Deputy Commissioner
for Patent Examination Policy

UNITED STATES PATENT AND TRADEMARK OFFICE

Commissioner for Patents
United States Patent and Trademark Office
P.O. Box 1450
Alexandria, VA 22313-1450
www.uspto.gov

Paper No.

LEE & HAYES, PLLC
601 W. RIVERSIDE AVENUE
SUITE 1400
SPOKANE, WA 99201

MAILED

MAR 18 2009

OFFICE OF PETITIONS

In re Patent No. 6,747,459 :
Issue Date: June 8, 2004 :
Application No. 10/017,370 : ON PETITION
Filed: December 13, 2001 :
Patentee(s): Michael T. Parker, et. al. :

This is a decision on the petition under 37 CFR 1.378(c), filed on September 3, 2008, to accept the delayed payment of a maintenance fee for the above-identified patent.

Since petitioner has demonstrated to the satisfaction of the Commissioner that the delay in timely paying the maintenance fee was unintentional, the petition under 37 CFR 1.378(c) is hereby **GRANTED**.

The maintenance fee is hereby accepted and the above-identified patent is reinstated as of the mail date of this decision.

Since the address given in the present petition differs from the address record, a courtesy copy of this decision is being mailed to the address in the petition. Thereafter, all future correspondence will be mailed to the address of record until otherwise instructed.

This patented file is being forwarded to Files Repository.

Telephone inquiries should be directed to the undersigned at (571) 272-3226.

Andrea Smith
Petitions Examiner
Office of Petitions

cc: David A. Divine
421 W. Riverside Avenue, Suite 500
Spokane, Washington 99201

UNITED STATES PATENT AND TRADEMARK OFFICE

Commissioner for Patents
United States Patent and Trademark Office
P.O. Box 1450
Alexandria, VA 22313-1450
www.uspto.gov

BANNER & WITCOFF
1001 G STREET N W
SUITE 1100
WASHINGTON DC 20001

COPY MAILED
SEP 14 2006
OFFICE OF PETITIONS

In re Application of
Anttila, et al. :
Application No. 10/017,382 : Decision on Application
Filing Date: December 18, 2001 : For Patent Term Adjustment
Attorney Docket No. 04770.00030 :

This is a decision on the "APPLICATION FOR PATENT TERM ADJUSTMENT UNDER 37 CFR 1.705," filed April 14, 2006. Applicants request correction of the patent term adjustment from three hundred forty six (346) days to add at least 135 days, solely on the basis of the Office taking in excess of three years to issue the patent.

The instant application for patent term adjustment requests reconsideration of the patent term adjustment as it relates to the Office's failure to issue the patent within 3 years of the filing date. *Applicants otherwise agree with the determination of patent term adjustment of 346 days indicated in the notice of allowance.* A decision is being **held in abeyance** until after the actual patent date. Knowledge of the actual date the patent issues is required to calculate the amount, if any, of additional patent term patentees are entitled to for Office failure to issue the patent within 3 years. See § 1.703(b).

Patentees are given **TWO (2) MONTHS** from the issue date of the patent to file a written request for reconsideration of the patent term adjustment for Office failure to issue the patent within 3 years. A copy of this decision should accompany the request. Patentees may seek such consideration without payment of an additional fee. However, as to all other bases for seeking reconsideration of the patent term adjustment indicated in the patent, all requirements of § 1.705(d) must be met. Requests for reconsideration on other bases must be timely filed and must include payment of the required fee.

Petitioners are reminded that if an application is entitled to an adjustment under 35 U.S.C. 154(b)(1)(B), the entire period during which the application was pending (except for periods excluded under 35 U.S.C. 154(b)(1)(B)(i)-(iii)), and not just the period beginning three years after the actual filing date of the application, is the period of delay under 35 U.S.C. 154(b)(1)(B)

in determining whether periods of delay overlap under 35 U.S.C. 154(b)(2)(A). Thus, any days of delay for Office issuance of the patent more than 3 years after the filing date of the application which overlap with the days of patent term adjustment accorded prior to the issuance of the patent will not result in any additional patent term adjustment. See 35 U.S.C. 154(b)(1)(B), 35 U.S.C. 154(b)(2)(A), and 37 CFR § 1.703(f). See also *Revision of Patent Term Extension and Patent Term Adjustment Provisions*; *Final Rule*, 69 Fed. Reg. 21704 (April 22, 2004).

The Office acknowledges submission of the $200.00 fee set forth in 37 CFR 1.18(e). No additional fees are required.

The application file is being forwarded to the Office of Patent Publication for issuance of the patent.

Telephone inquiries concerning this decision should be directed to Shirene Willis Brantley at (571) 272-3230.

Nancy Johnson
Senior Petitions Attorney
Office of Petitions
Office of Deputy Commissioner
for Patent Examination Policy

UNITED STATES PATENT AND TRADEMARK OFFICE

Commissioner for Patents
United States Patent and Trademark Office
P.O. Box 1450
Alexandria, VA 22313-1450
www.uspto.gov

BANNER & WITCOFF, LTD.
1100 13th STREET, N.W.
SUITE 1200
WASHINGTON DC 20005-4051

COPY MAILED

NOV 14 2008

OFFICE OF PETITIONS

In re Patent No. 7,125,336	:	
Anttila, et al.	:	DECISION ON REQUEST
Issue Date: October 24, 2006	:	FOR
Application No. 10/017,382	:	RECONSIDERATION OF
Filed: December 18, 2001	:	PATENT TERM ADJUSTMENT
Atty Docket No. 004770.00030	:	

This is a decision on the "APPLICATION FOR PATENT TERM ADJUSTMENT UNDER 37 C.F.R. § 1.705(b)," filed December 18, 2006. Patentees request an addition of 346 days of patent term adjustment for a total of one thousand and twenty-one (1021) days. The petition will be treated under 37 C.F.R. § 1.705(d).

The request for reconsideration of the patent term adjustment under § 1.705(d) is **DISMISSED**.

Patentees are given **TWO (2) MONTHS** from the mail date of this decision to respond. No extensions of time will be granted under § 1.136.

Patentees filed an application for patent term adjustment as it related to the Office's failure to issue a patent within three (3) years of the application's filing date. On September 14, 2006, the Office mailed a decision holding the application for patent term adjustment in abeyance until the patent issued. Patentees had two (2) months from the issue date of the patent to file a request for reconsideration of the patent term adjustment for Office failure to issue the patent within three

(3) years. On October 24, 2006, the above-identified application matured into U.S. Patent No. 7,125,336, with a revised Patent Term Adjustment of 675 days. The instant request for reconsideration, filed on December 18, 2006, was timely filed within 2 months of the date the patent issued. See § 1.705(d). Patentees assert that an additional period of adjustment of 346 days should have been entered for the Office taking in excess of three years to issue the patent plus the number of days beyond 14 months that it took for the Office to mail a first Office action, which was 346 days beyond 14 months after filing the application.

The Office did enter a period of adjustment of 346 days pursuant to 37 CFR 1.702(a)(1), as well as, a period of adjustment of 71 days pursuant to 37 CFR 1.702(a)(4). Moreover, with respect to §1.703(b), it is noted that the patent issued three years and 675 days after its filing date. However, considering the extent to which the periods of adjustment overlap, the application is only entitled to an additional period of adjustment of 258 days pursuant to 37 CFR 1.703(b).

Specifically, the period for over 3 year pendency does not overlap only to the extent that the actual dates in the period beginning three years after the date on which the application was filed overlap with the actual dates in the periods for failure of the Office to take action within specified time frames. In other words, consideration of the overlap does not begin three years after the filing date of the application. Patentees are incorrect in treating the relevant period as starting on December 18, 2004, the date that is 3 years after the actual filing date of the application.

Any days of delay for Office issuance of the patent more than 3 years after the filing date of the application, which overlap, with the days of patent term adjustment accorded prior to the issuance of the patent will not result in any additional patent term adjustment. Further, in considering the overlap, the entire period during which the application was pending (except for periods excluded under 35 U.S.C. 154(b)(1)(B)(i)-(iii), and not just the period beginning three years after the actual filing date of the application, is the period of delay under 35 U.S.C. 154(b)(1)(B) in determining whether periods of delay overlap under 35 U.S.C. 154(b)(2)(A). See 35 U.S.C. 154(b)(1)(B); 35 U.S.C. 154(b)(2)(A); and 37 CFR 1.703(f). In this instance, it was properly concluded that the 346 and 71

days accorded pursuant to 1.702(a)(1) and (4) for Office delay during the pendency of the application overlapped with the 675 days for Office delay in issuance of the patent. Thus, only the additional non-overlapping period of (675 - 417) 258 days was entered for Office delay in issuing the patent pursuant to 37 CFR 1.703(b).

In view thereof, the patent term adjustment of 675 (346 + 71 + 258) days indicated in the patent is correct.

Patentees have paid the $200.00 petition fee set forth in 37 CFR 1.18(e) twice. Deposit account no. 19-0733 will be refunded $200.00 in due course.

Telephone inquiries specific to this matter should be directed to Shirene Willis Brantley at (571) 272-3230.

Nancy Johnson
Senior Petitions Attorney
Office of Petitions

UNITED STATES PATENT AND TRADEMARK OFFICE

Commissioner for Patents
United States Patent and Trademark Office
P.O. Box 1450
Alexandria, VA 22313-1450
www.uspto.gov

COPY MAILED

JUL 13 2009

OFFICE OF PETITIONS

BANNER & WITCOFF, LTD.
1100 13th STREET, N.W.
SUITE 1200
WASHINGTON DC 20005-4051

In re Patent No. 7,125,336	:	
Anttila, et al.	:	DECISION ON REQUEST
Issue Date: October 24, 2006	:	FOR
Application No. 10/017,382	:	RECONSIDERATION OF
Filed: December 18, 2001	:	PATENT TERM ADJUSTMENT
Atty Docket No. 004770.00030	:	

This is a decision on the "APPLICATION FOR PATENT TERM ADJUSTMENT UNDER 37 C.F.R. § 1.705(b)," filed December 5, 2008. Patentees request an addition of 346 days of patent term adjustment for a total of one thousand and twenty-one (1021) days. The petition will be treated under 37 C.F.R. § 1.705(d).

The request for reconsideration of the patent term adjustment under § 1.705(d) is **DISMISSED**.

Patentees are given **TWO (2) MONTHS** from the mail date of this decision to respond. No extensions of time will be granted under § 1.136.

Patentees filed an application for patent term adjustment as it related to the Office's failure to issue a patent within three (3) years of the application's filing date, on April 14, 2006. On September 14, 2006, the Office mailed a decision holding the application for patent term adjustment in abeyance until the patent issued. Patentees had two (2) months from the issue date of the patent to file a request for reconsideration of the patent term adjustment for Office failure to issue the patent

the patent issued, on December 18, 2006. See § 1.705(d). On November 14, 2008, the Office mailed a decision dismissing the December 18, 2006 request for reconsideration. Patentees had two (2) months from the mail date of the November 14, 2008 decision to request reconsideration.

The instant petition was timely filed on December 5, 2008.

Patentees maintain that the patent term methodology identified and explained in Wyeth v. Dudas, 580 F. Supp. 2d 138, 88 U.S.P.Q. 2d 1538 (D.D.C. 2008) governs the USPTO calculation of the patent term adjustment for this patent. Therefore, patentees maintain that the patent term adjustment should have been 1021 days.

Patentees argue that the period of adjustment due to the Three Year Delay by the Office, pursuant to 37 CFR § 1.703(b), is 675 days. This 675 day period is calculated based on the application having been filed under 35 U.S.C. §111(a) on December 18, 2001, and the patent having not issued until October 24, 2006, three years and 675 days later. Petitioners assert that in addition to this 675 day period, they are entitled to a period of adjustment due to examination delay, pursuant to 37 CFR §1.702(a), totalling 417 days. This 417 day period is the sum of:

- a period of delay of 346 days for the failure by the Office to mail at least one of a notification under 35 U.S.C. 132 not later than fourteen months after the date on which the application was filed under 35 U.S.C. 111(a), pursuant to § 1.702(a)(1);
- a period of delay of 71 days for the failure by the Office to issue the patent after the issue fee was paid and all outstanding requirements were satisfied, pursuant to § 1.702(a)(4);

Under 37 CFR § 1.703(f), applicants are entitled to a period of patent term adjustment equal to the period of delays based on the grounds set forth in 37 CFR §1.702 reduced by the period of time equal to the period of time during which applicants failed to engage in reasonable efforts to conclude prosecution pursuant to 37 CFR §1.704. In other words, the period of Office delay reduced by the period of applicant delay. The period of reduction of 0 days for applicant delay is not in dispute. Patentees assert that the total period of Office delay is the

sum of the period of Three Years Delay (675 days) and the period of Examination Delay (417 days) to the extent that these periods of delay are not overlapping.

Further, patentees articulate the period of overlap as follows:

> Patentees contend that the full 71 days for failure by the Office to issue the patent after the issue fee was paid and all outstanding requirements were satisfied, pursuant to § 1.702(a)(4) (August 14, 2006 to October 24, 2006) overlaps with a portion of the Three Year delay period (December 19, 2004 to October 24, 2006).
>
> Thus, according to patentees the total period of overlap is 71 days.

Accordingly, patentees submit that the total period of Office Delay is 604 days, which is the sum of the period of Three Year Delay (675 days) and the period of Examination Delay (417 days), reduced by the period of overlap (71 days).

As such, applicants assert entitlement to a patent term adjustment of 1021 days (675 +417 reduced by 71 overlap -0 for applicant delay).

The Office agrees that the patent issued 3 years and 675 days after its filing date. The Office agrees that the actions detailed above were not taken within the specified time frames, and thus, the entry of period of adjustment of 417 days is correct. At issue is whether applicants should accrue 604 (adjusted for overlap, per applicants' calculations) days of patent term adjustment for the Office taking in excess of three years to issue the patent, as well as, 417 days for Office failure to take certain actions within a specified time frames (or examination delay).

The Office contends that all 675 days overlap. Patentees' interpretation of the period of overlap has been considered and found to be incorrect. Patentees' calculation of the period of overlap is inconsistent with the Office's interpretation of this provision. 35 U.S.C. 154(b)(2)(A) limits the adjustment of patent term, as follows:

> to the extent that the periods of delay attributable to grounds specified in paragraph (1) overlap, the period of any adjustment granted under this subsection shall not exceed the actual number of days the issuance of the patent was delayed.

Likewise, 37 CFR 1.703(f) provides that:

> To the extent that periods of delay attributable to the grounds specified in §1.702 overlap, the period of adjustment granted under this section shall not exceed the actual number of days the issuance of the patent was delayed.

As explained in *Explanation of 37 CFR 1.703(f) and of the United States Patent and Trademark Office Interpretation of 35 U.S.C. 154(b)(2)(A)*, 69 Fed. Reg. 34283 (June 21, 2004), the Office interprets 35 U.S.C. 154(b)(2)(A) as permitting either patent term adjustment under 35 U.S.C. 154(b)(1)(A)(i)-(iv), or patent term adjustment under 35 U.S.C. 154(b)(1)(B), but not as permitting patent term adjustment under both 35 U.S.C. 154(b)(1)(A)(i)-(iv) and 154(b)(1)(B). Accordingly, the Office implements the overlap provision as follows:

> If an application is entitled to an adjustment under 35 U.S.C. 154(b)(1)(B), the entire period during which the application was pending (except for periods excluded under 35 U.S.C. 154(b)(1)(B)(i)-(iii)), and not just the period beginning three years after the actual filing date of the application, is the period of delay under 35 U.S.C. 154(b)(1)(B) in determining whether periods of delay overlap under 35 U.S.C. 154(b)(2)(A). Thus, any days of delay for Office issuance of the patent more than 3 years after the filing date of the application, which overlap with the days of patent term adjustment accorded prior to the issuance of the patent will not result in any additional patent term adjustment. See 35 U.S.C. 154(b)(1)(B), 35 U.S.C. 154(b)(2)(A), and 37 CFR § 1.703(f). See *Changes to Implement Patent Term Adjustment Under Twenty Year Term; Final Rule*, 65 Fed. Reg. 54366 (Sept. 18, 2000). See also *Revision of Patent Term Extension and Patent Term Adjustment Provisions; Final Rule*, 69 Fed. Reg. 21704 (April 22, 2004), 1282 Off. Gaz. Pat. Office 100 (May 18, 2004). See also *Explanation of 37 CFR 1.703(f) and of the United States Patent and Trademark*

Office Interpretation of 35 U.S.C. 154(b)(2)(A), 69 Fed. Reg. 34283 (June 21, 2004).

The current wording of § 1.703(f) was revised in response to the misinterpretation of this provision by a number of applicants. The rule was slightly revised to more closely track the corresponding language of 35 U.S.C. 154(b)(2)(A). The relevant portion differs only to the extent that the statute refers back to provisions of the statute whereas the rule refers back to sections of the rule. This was not a substantive change to the rule nor did it reflect a change of the Office's interpretation of 35 U.S.C. 154(b)(2)(A). As stated in the *Explanation of 37 CFR 1.703(f) and of the United States Patent and Trademark Office Interpretation of 35 U.S.C. 154(b)(2)(A)*, the Office has consistently taken the position that if an application is entitled to an adjustment under the three-year pendency provision of 35 U.S.C. 154(b)(1)(B), the entire period during which the application was pending before the Office (except for periods excluded under 35 U.S.C. 154(b)(1)(B)(i)-(iii)), and not just the period beginning three years after the actual filing date of the application, is the relevant period under 35 U.S.C. 154(b)(1)(B) in determining whether periods of delay "overlap" under 35 U.S.C. 154(b)(2)(A).

This interpretation is consistent with the statute. Taken together the statute and rule provide that to the extent that periods of delay attributable to grounds specified in 35 U.S.C. 154(b)(1) and in corresponding §1.702 overlap, the period of adjustment granted shall not exceed the actual number of days the issuance of the patent was delayed. The grounds specified in these sections cover the A) guarantee of prompt Patent and Trademark Office responses, B) guarantee of no more than 3 year application pendency, and C) guarantee or adjustments for delays due to interference, secrecy orders and appeals. A section by section analysis of 35 U.S.C. 154(b)(2)(A) specifically provides that:

> Section 4402 imposes limitations on restoration of term. In general, pursuant to [35 U.S.C.] 154(b)(2)(A)-(C), total adjustments granted for restorations under [35 U.S.C. 154](b)(1) are reduced as follows: (1) To the extent that there are multiple grounds for extending the term of a patent that may exist simultaneously (e.g., delay due to a secrecy order under [35 U.S.C.] 181 and administrative delay under [35 U.S.C.] 154(b)(1)(A)), the

> term should not be extended for each ground of delay but only for the actual number of days that the issuance of a patent was delayed; See 145 Cong. Rec. S14,718[1]

As such, the period for over 3 year pendency does not overlap only to the extent that the actual dates in the period beginning three years after the date on which the application was filed overlap with the actual dates in the periods for failure of the Office to take action within specified time frames. In other words, consideration of the overlap does not begin three years after the filing date of the application.

In this instance, the relevant period under 35 U.S.C. 154(b)(1)(B) in determining whether periods of delay "overlap" under 35 U.S.C. 154(b)(2)(A) is the entire period during which the application was pending before the Office, December 18, 2001 to October 24, 2006. (There were no periods excluded under 35 U.S.C. 154(b)(1)(B)(i)-(iii)). 417 days of patent term adjustment were accorded prior to the issuance of the patent for the Office failing to respond within specified time frames during the pendency of the application. During that time, the issuance of the patent was delayed by 675 days, not 675 + 417 days. The Office took 14 months and 346 days to issue a first Office action, and four months and 71 days to issue the patent after the issue fee was paid and all outstanding requirements were satisfied. Otherwise, the Office took all actions set forth in 37 C.F.R. § 1.702(a) within the prescribed timeframes. Nonetheless, given the initial 417 days of Office delay and the time allowed within the timeframes for processing and examination, the patent issued, three years and 675 days after its filing date. The Office did not delay 675 days and then 346 days and then an additional 71 days. The period of delay of 675 days attributable to the delay in the issuance of the patent partially overlaps with the adjustment of 417 days attributable to grounds specified in § 1.702(a)(1) and (4). Entry of all three periods is not warranted. 675 days was properly determined to be the actual number of days that the issuance of the patent was delayed. The 675 days for over 3 years overlaps with not only the 71 days accorded pursuant to § 1.702(a)(4) but also the 417 days accorded pursuant to § 1.702(a)(1).

---

[1] The AIPA is title IV of the Intellectual Property and Communications Omnibus Reform Act of 1999 (S. 1948), which was incorporated and enacted as law as part of Pub. L. 106-113. The Conference Report for H.R. 3194, 106th Cong. 1st Sess. (1999), which resulted in Pub. L. 106-113, does not contain any discussion (other than the incorporated language) of S. 1948. A section-by-section analysis of S. 1948, however, was printed in the Congressional Record at the request of Senator Lott, See 145 Cong. Rec. S14,708-26 (1999)(daily ed. Nov. 17, 1999).

Accordingly, at issuance, only the additional non-overlapping period of (675 - 417) 258 days was entered for Office delay in issuing the patent pursuant to 37 CFR 1.703(b).

In view thereof, the Office affirms that the revised determination of patent term adjustment at the time of the issuance of the patent is 675 days (417 examination delay + 258 non-overlapping Three Year Delay - 0 applicant delay).

The Office acknowledges submission of the $200.00 fee set forth in 37 CFR 1.18(e) on April 14, 2006. No additional fees are required.

Telephone inquiries specific to this matter should be directed to Shirene Willis Brantley, Senior Petitions Attorney, at (571) 272-3230.

Nancy Johnson
Senior Petitions Attorney
Office of the Deputy Commissioner
for Patent Examination Policy

UNITED STATES PATENT AND TRADEMARK OFFICE

COMMISSIONER FOR PATENTS
UNITED STATES PATENT AND TRADEMARK OFFICE
WASHINGTON, D.C. 20231
www.uspto.gov
DW 08-02

Jeffrey K. Emery
51 Merner Avenue
Nepean, ON K2J 3Z3
CANADA

COPY MAILED

AUG 2 1 2002

OFFICE OF PETITIONS

In re Application of
Marsh et al.
Application No. 10/017,413
Filed: 18 December, 2001
For:METHODS FOR EQUALIZATION OF A DWDM SYSTEM

Dear Mr. Emery:

You are named as a joint inventor in the above identified United States patent application, filed under the provisions of 35 U.S.C. 116 (United States Code), and 37 CFR 1.47(a), Rules of Practice in Patent Cases. Should a patent be granted on the application you will be designated therein as a joint inventor.

As a named inventor you are entitled to inspect any paper in the file wrapper of the application, order copies of all or any part thereof (at a prepaid cost per 37 CFR 1.19) or make your position of record in the application. Alternatively, you may arrange to do any of the preceding through a registered patent attorney or agent presenting written authorization from you. If you care to join the application, counsel of record (see below) would presumably assist you. Joining in the application would entail the filing of an appropriate oath or declaration by you pursuant to 37 CFR 1.63.

Telephone inquiries regarding this communication should be directed to the undersigned at 703/308-6918. Requests for information regarding your application should be directed to the File Information Unit at 703/308-2733. Information regarding how to pay for and order a copy of the application, or a specific paper in the application, should be directed to Certification Division at 703/308-9726 or 1-800-972-6382 (outside the Washington D.C. area).

D Wood

Douglas I. Wood
Senior Petitions Attorney
Office of Petitions
Office of the Deputy Commissioner
for Patent Examination Policy

SMART & BIGGAR
P.O. BOX 2999, STATION D
55 METCALFE STREET, SUITE 900
OTTAWA, ON K1P 5Y6
CANADA

UNITED STATES PATENT AND TRADEMARK OFFICE

COMMISSIONER FOR PATENTS
UNITED STATES PATENT AND TRADEMARK OFFICE
WASHINGTON, D.C. 20231
www.uspto.gov
DW 08-02

Paper No. 4

SMART & BIGGAR
P.O. BOX 2999, STATION D
55 METCALFE STREET, SUITE 900
OTTAWA, ON K1P 5Y6
CANADA

COPY MAILED

AUG 2 1 2002

OFFICE OF PETITIONS

In re Application of	:
Marsh, Gobeil, and Emery	:
Application No. 10/017,413	: DECISION ACCORDING STATUS
Filed: 18 December, 2001	: UNDER 37 CFR 1.47(a)
Attorney Docket No. 71493-973 /pw	:

This is in response to the petition filed under 37 CFR 1.47(a) on 19 June, 2002.

The petition is **GRANTED**.

Petitioners have shown that the non-signing inventor, Jeffrey K. Emery, has refused to join in the filing of the above-identified application after having been sent a copy of the application papers. Specifically, the petitioners have established that a copy of the above-identified application was sent to the non-signing inventor's last known address. However, the non-signing inventor has failed to sign and return the declaration naming him as a joint inventor along with Paul William Marsh and Gerard Gobiel.

The above-identified application and papers have been reviewed and found in compliance with 37 CFR 1.47(a). This application is hereby accorded Rule 1.47(a) status.

As provided in Rule 1.47(c), this Office will forward notice of this application's filing to the non-signing inventor at the address given in the declaration. Notice of the filing of this application will also be published in the Official Gazette.

The surcharge of $130.00 and one (1) month time extension fee of $110.00 will be charged to counsel's deposit account, No. 19-2550.

The application is being forwarded to the Office of Initial Patent Examination for further processing.

Telephone inquiries related to this decision should be directed to the undersigned at 703-308-6918.

Douglas I. Wood
Senior Petitions Attorney
Office of Petitions
Office of the Deputy Commissioner
for Patent Examination Policy

UNITED STATES PATENT AND TRADEMARK OFFICE

Commissioner for Patents
United States Patent and Trademark Office
P.O. Box 1450
Alexandria, VA 22313-1450
www.uspto.gov

STERNE, KESSLER, GOLDSTEIN & FOX PLLC
1100 NEW YORK AVENUE, N.W.
WASHINGTON DC 20005

COPY MAILED

JAN 1 8 2005

OFFICE OF PETITIONS

In re Application of	:	
Phillips et al.	:	
Application No. 10/017,435	:	DECISION GRANTING PETITION
Filed: December 14, 2001	:	UNDER 37 CFR 1.137(b)
Attorney Docket No. 2222.0820003	:	

This is a decision on the petition, filed January 10, 2005, which is being treated as a petition under 37 CFR 1.137(b) to revive the instant non-provisional application for failure to timely notify the U.S. Patent and Trademark (USPTO) of the filing of an application in a foreign country, or under a multinational treaty that requires publication of applications eighteen months after filing. *See* 37 CFR 1.137(f).

The petition is **GRANTED**.

Petitioner states that the instant nonprovisional application is the subject of an application filed in an eighteen-month publication country on May 10, 2002. However, the USPTO was unintentionally not notified of this filing within 45 days subsequent to the filing of the subject application in an eighteen-month publication country.

In view of the above, this application became abandoned pursuant to 35 U.S.C. § 122(b)(2)(B)(iii) and 37 CFR 1.213(c) for failure to timely notify the Office of the filing of an application in a foreign country or under a multilateral international agreement that requires publication of applications 18 months after filing.

A petition to revive an application abandoned pursuant to 35 U.S.C. 122(b)(2)(B)(iii) for failure to notify the USPTO of a foreign filing must be accompanied by:

(1) the required reply which is met by the notification of such filing in a foreign country or under a multinational treaty;
(2) the petition fee as set forth in 37 CFR 1.17(m); and
(3) a statement that the entire delay in filing the required reply from the due date of the reply until the filing of a grantable petition was unintentional.

The instant petition has been found to be in compliance with 37 CFR 1.137(b). Accordingly, the failure to timely notify the USPTO of a foreign or international filing within 45 days after the date of filing of such foreign or international application as provided by 35 U.S.C. § 122(b)(2)(B)(iii) and 37 CFR 1.213(c) is accepted as having been unintentionally delayed.

The previous Request and Certification under 35 U.S.C. § 122(b)(2)(B)(i) has been rescinded. A Notice Regarding Rescission of Nonpublication Request which sets forth the projected publication date of April 28, 2005 accompanies this decision on petition.

This application is being forwarded to Technology Center Art Unit 2655 for examination in due course.

Telephone inquiries concerning this decision should be directed to the undersigned at (571) 272-3206.

Liana Chase
Petitions Examiner
Office of Petitions
Office of the Deputy Commissioner
for Patent Examination Policy

ATTACHMENT: Notice Regarding Rescission of Nonpublication Request

UNITED STATES PATENT AND TRADEMARK OFFICE

COMMISSIONER FOR PATENTS
UNITED STATES PATENT AND TRADEMARK OFFICE
WASHINGTON, D.C. 20231
www.uspto.gov

Paper No. 4

COPY MAILED

SEP 2 5 2002

OFFICE OF PETITIONS

PENNIE AND EDMONDS
1155 AVENUE OF THE AMERICAS
NEW YORK, NY 10036-2711

In re Application of Cerami, et al. Application No. 10/017,457 Filed: December 7, 2001 Atty. Dkt. No.: 10162-006-999 For: IMMUNE MODULATION DEVICE FOR USE IN ANIMALS	DECISION GRANTING PETITION UNDER 37 CFR 1.47(a)

This is in response to the petition under 37 CFR 1.47(a), filed August 20, 2002.

The petition is **GRANTED**.

Petitioner has shown that inventors Anthony Cerami, Carla Cerami, Qiao-Wen Xie have refused to join in the filing of the above-identified application after having been presented with the application papers.

The above-identified application and papers have been reviewed and found in compliance with 37 CFR 1.47(a). This application is hereby accorded Rule 1.47(a) status.

While petitioner has failed to provide the last known addresses of the non-signing inventors, the last known addresses are presumed to be those which appear on the declaration submitted herewith. If this is not the case, petitioner is required to notify the Office in writing.

As provided in Rule 1.47(c), this Office will forward notice of this application's filing to the non-signing inventor at the address given in the petition. Notice of the filing of this application will also be published in the Official Gazette.

After this decision is mailed, the above-identified application will be returned to the Office of Initial Patent Examination for further processing.

Telephone inquiries related to this decision may be directed to the undersigned at (703) 305-0310.

Alesia M. Brown
Petitions Attorney
Office of Petitions
Office of the Deputy Commissioner
for Patent Examination Policy

UNITED STATES PATENT AND TRADEMARK OFFICE

COMMISSIONER FOR PATENTS
UNITED STATES PATENT AND TRADEMARK OFFICE
WASHINGTON, D.C. 20231
www.uspto.gov

ILYA S. KOYFMAN
5 MESSENGER LANE
RINGOES, NJ 08551

COPY MAILED

SEP 2 5 2002

OFFICE OF PETITIONS

In re Application of :
Cerami, et al. :
Application No. 10/017,457 : LETTER
Filed: December 7, 2001 :
Atty. Dkt. No.: 10162-006-999 :
For: IMMUNE MODULATION DEVICE FOR :
USE IN ANIMALS :

Dear Sir:

You are named as an inventor in the above-identified United States patent application filed under the provisions of 35 U.S.C. 116 (United States Code) and 37 C.F.R. § 1.47(a), Rules of Practice in Patent Cases. Should a patent be granted on the application you will be designated therein as a joint inventor.

As a named inventor you are entitled to inspect any paper in the file wrapper of the application, order copies of all or any part thereof (at a prepaid cost as per 37 C.F.R. § 1.19) or make your position of record in the application. Alternatively, you may arrange to do any of the preceding through a registered patent attorney or agent presenting written authorization from you. If you care to join the application, counsel of record (see below) would presumably assist you. Joining in the application would entail the filing of an appropriate oath or declaration by you pursuant to 37 C.F.R. § 1.63.

Telephone inquiries regarding this communication should be directed to the undersigned at (703) 305-0310. Requests for information regarding your application should be directed to the File Information Unit at (703) 308-2733. Information regarding how to pay for and order a copy of the application, or a specific paper in the application, should be directed to Certification Division at (703) 308-9726 or 1-800-972-6382 (outside the Washington D.C. area).

Alesia M. Brown
Petitions Attorney
Office of Petitions
Office of the Deputy Commissioner
for Patent Examination Policy

CC: PENNIE AND EDMONDS
1155 AVENUE OF THE AMERICAS
NEW YORK, NY 10036-2711

UNITED STATES PATENT AND TRADEMARK OFFICE

COMMISSIONER FOR PATENTS
UNITED STATES PATENT AND TRADEMARK OFFICE
WASHINGTON, D.C. 20231
www.uspto.gov

JOEL ROSENBLATT
47 ROBIN GLEN ROAD
WATCHUNG, NJ 07060

COPY MAILED

SEP 2 5 2002

OFFICE OF PETITIONS

In re Application of :
Cerami, et al. :
Application No. 10/017,457 : LETTER
Filed: December 7, 2001 :
Atty. Dkt. No.: 10162-006-999 :
For: IMMUNE MODULATION DEVICE FOR :
USE IN ANIMALS :

Dear Sir:

You are named as an inventor in the above-identified United States patent application filed under the provisions of 35 U.S.C. 116 (United States Code) and 37 C.F.R. § 1.47(a), Rules of Practice in Patent Cases. Should a patent be granted on the application you will be designated therein as a joint inventor.

As a named inventor you are entitled to inspect any paper in the file wrapper of the application, order copies of all or any part thereof (at a prepaid cost as per 37 C.F.R. § 1.19) or make your position of record in the application. Alternatively, you may arrange to do any of the preceding through a registered patent attorney or agent presenting written authorization from you. If you care to join the application, counsel of record (see below) would presumably assist you. Joining in the application would entail the filing of an appropriate oath or declaration by you pursuant to 37 C.F.R. § 1.63.

Telephone inquiries regarding this communication should be directed to the undersigned at (703) 305-0310. Requests for information regarding your application should be directed to the File Information Unit at (703) 308-2733. Information regarding how to pay for and order a copy of the application, or a specific paper in the application, should be directed to Certification Division at (703) 308-9726 or 1-800-972-6382 (outside the Washington D.C. area).

Alesia M. Brown
Petitions Attorney
Office of Petitions
Office of the Deputy Commissioner
for Patent Examination Policy

CC: PENNIE AND EDMONDS
1155 AVENUE OF THE AMERICAS
NEW YORK, NY 10036-2711

UNITED STATES PATENT AND TRADEMARK OFFICE

COMMISSIONER FOR PATENTS
UNITED STATES PATENT AND TRADEMARK OFFICE
WASHINGTON, D.C. 20231
www.uspto.gov

KEVOR S. TENHUISEN
40 ALEXANDRA WAY
CLINTON, NJ 07060

COPY MAILED

SEP 2 5 2002

OFFICE OF PETITIONS

In re Application of
Cerami, et al.
Application No. 10/017,457
Filed: December 7, 2001
Atty. Dkt. No.: 10162-006-999
For: IMMUNE MODULATION DEVICE FOR USE IN ANIMALS

LETTER

Dear Sir:

You are named as an inventor in the above-identified United States patent application filed under the provisions of 35 U.S.C. 116 (United States Code) and 37 C.F.R. § 1.47(a), Rules of Practice in Patent Cases. Should a patent be granted on the application you will be designated therein as a joint inventor.

As a named inventor you are entitled to inspect any paper in the file wrapper of the application, order copies of all or any part thereof (at a prepaid cost as per 37 C.F.R. § 1.19) or make your position of record in the application. Alternatively, you may arrange to do any of the preceding through a registered patent attorney or agent presenting written authorization from you. If you care to join the application, counsel of record (see below) would presumably assist you. Joining in the application would entail the filing of an appropriate oath or declaration by you pursuant to 37 C.F.R. § 1.63.

Telephone inquiries regarding this communication should be directed to the undersigned at (703) 305-0310. Requests for information regarding your application should be directed to the File Information Unit at (703) 308-2733. Information regarding how to pay for and order a copy of the application, or a specific paper in the application, should be directed to Certification Division at (703) 308-9726 or 1-800-972-6382 (outside the Washington D.C. area).

Alesia M. Brown
Petitions Attorney
Office of Petitions
Office of the Deputy Commissioner
for Patent Examination Policy

CC: PENNIE AND EDMONDS
1155 AVENUE OF THE AMERICAS
NEW YORK, NY 10036-2711

UNITED STATES PATENT AND TRADEMARK OFFICE

Commissioner for Patents
United States Patent and Trademark Office
P.O. Box 1450
Alexandria, VA 22313-1450
www.uspto.gov

PAULY, DEVRIES SMITH & DEFFNER, L.L.C.
900 IDS CENTER
80 SOUTH EIGHTH STREET
MINNEAPOLIS, MN 55402-8773

COPY MAILED

MAY 3 1 2006

OFFICE OF PETITIONS

In re Application of
Alexander Sergeievich Gybin et al.
Application No. 10/017,466
Filed: December 13, 2001
Attorney Docket No. 2970.101US01

ON PETITION

This is a decision on the petition filed January 19, 2006 under 37 CFR 1.137(b),[1] to revive the above-identified application.

The petition under 37 CFR 1.137 (b) is **GRANTED**.

This application became abandoned January 13, 2006 for failure to timely pay the issue fee on or before January 12, 2006. The instant petition and this decision precede the mailing of the Notice of Abandonment.

The issue fee, petition fee and publication fee have been applied. All other requirements of 37 CFR 1.137(b) having now been met, this application file is being forwarded to the Publishing Division to be processed into a patent.

Telephone inquiries concerning this matter may be directed to the undersigned Petitions Attorney at (571) 272-3212.

Patricia Faison-Ball
Senior Petitions Attorney
Office of Petitions

---

[1] Effective December 1, 1997, the provisions of 37 CFR 1.137(b) now provide that where the delay in reply was unintentional, a petition may be filed to revive an abandoned application or a lapsed patent pursuant to 37 CFR 1.137(b). A grantable petition filed under the provisions of 37 CFR 1.137(b) must be accompanied by:

(1) the required reply, unless previously filed. In a nonprovisional application abandoned for failure to prosecute, the required reply may be met by the filing of a continuing application. In a nonprovisional application filed on or after June 8, 1995, and abandoned for failure to prosecute, the required reply may also be met by the filing of a request for continued examination in compliance with § 1.114. In an application or patent, abandoned or lapsed for failure to pay the issue fee or any portion thereof, the required reply must be the payment of the issue fee or any outstanding balance thereof.

(2) the petition fee as set forth in 37 CFR 1.17(m);

(3) a statement that the entire delay in filing the required reply from the due date for the reply until the filing of a grantable petition pursuant to 37 CFR 1.137(b) was unintentional. The Commissioner may required additional information where there is a question whether the delay was unintentional; and

(4) any terminal disclaimer (and fee as set forth in 37 CFR 1.20(d)) required pursuant to 37 CFR 1.137(c)).

UNITED STATES PATENT AND TRADEMARK OFFICE

Commissioner for Patents
United States Patent and Trademark Office
P.O. Box 1450
Alexandria, VA 22313-1450
www.uspto.gov

LEYDIG VOIT & MAYER, LTD.
(ROCKFORD OFFICE)
TWO PRUDENTIAL PLAZA, SUITE 4900
180 NORTH STESTON AVENUE
CHICAGO IL 60601-6731

COPY MAILED

DEC 19 2007

OFFICE OF PETITIONS

In re Application of	:	
Porter et al.	:	
Application No. 10/017467	:	DECISION
Filing or 371(c) Date: 12/13/2001	:	ON PETITION
Patent No.: 6736978	:	
Issue Date: 05/18/2004	:	
Attorney Docket No.: 501677	:	

This is a decision on the correspondence entitled "Petition to Correct Name of Assignee on Patent Issued," filed December 10, 2004, to correct the name of the assignee on the front page of the above-identified patent by way of a Certificate of Correction. The delay in treating this petition is regretted.

The Petition is **granted**.

The petition was accompanied by a certificate of correction as required by 3.81(b), and the fee submitted with the present petition. Further, Office assignment records reflect that Iowa State University Research Foundation, and NVE Corporation, are the assignees of record. As the request complies with the provisions of 37 CFR 3.81(b), it would be appropriate for a certificate of correction to be processed.

Telephone inquiries concerning this matter should be directed to the undersigned at (571) 272-3232. Any questions concerning the issuance of the Certificate of Correction should be directed to the Certificate of Correction Branch at (571) 272-4200.

This matter is being referred to the Certificates of Correction Branch for processing of a certificate of correction after issuance of this application into a patent.

Derek L. Woods
Attorney
Office of Petitions

UNITED STATES PATENT AND TRADEMARK OFFICE

COMMISSIONER FOR PATENTS
UNITED STATES PATENT AND TRADEMARK OFFICE
P.O. BOX 1450
ALEXANDRIA, VA 22313-1450
WWW.USPTO.GOV

Paper No. None

DANN, DORFMAN, HERRELL & SKILLMAN
1601 MARKET STREET
SUITE 2400
PHILADELPHIA PA 19103-2307

COPY MAILED
DEC 18 2006
OFFICE OF PETITIONS

In re Application of Eriko Takano et al. Application No. 10/017,471 Filed: October 23, 2001 Attorney Docket No. 0380-P02329US1 Title: METHODS OF INCREASING ANTIBIOTIC PRODUCTION IN STREPTOMYCES BY DELETION OF THE SCBA GENE	DECISION ON PETITION UNDER 37 C.F.R. §1.181(A)

This is a decision on the petition filed on January 26, 2006, entitled "petition to charge omitted fee to deposit account," which is properly treated as a petition under 37 C.F.R. §1.181(a).

The Office regrets the period of delay in issuing this decision.

The present application was filed on October 23, 2001. On March 15, 2002, the Office mailed a "notice to file missing parts of nonprovisional application," (first notice), which set a two-month period to respond. A response was received on May 31, 2002, which contained a certificate of mailing dated May 14, 2002. On December 9, 2002, the Office sent a "notice to comply with requirements for patent applications containing nucleotide sequence and/or amino acid sequence disclosures," (second notice) which set a two-month period for response. A response was received on March 11, 2003, along with a one-month extension of time.

With the present petition, Petitioner has indicated that a two-month extension of time was required in order to make timely the response of March 11, 2003.

The electronic file has been reviewed, and Petitioner's assertion appears to be correct.

Accordingly, the petition under 37 C.F.R. §1.181(a) is **GRANTED**.

On March 12, 2003, Petitioner's Deposit Account was charged the amount of $110 for the one-month extension of time. Petitioner's Deposit Account will be charged an additional $340, which is the difference between $450 (the fee which is currently associated with a petition for a two-month extension of time) and $110.

The Office of Patent Publication will be notified of this decision so that the present application can be processed into a patent.

Telephone inquiries regarding *this decision* should be directed to the undersigned at (571) 272-3225. All other inquiries concerning examination procedures or status of the application should be directed to the Technology Center.

Paul Shanoski
Senior Attorney
Office of Petitions
United States Patent and Trademark Office

UNITED STATES PATENT AND TRADEMARK OFFICE

Commissioner for Patents
United States Patent and Trademark Office
P.O. Box 1450
Alexandria, VA 22313-1450
www.uspto.gov

NOV 21 2005

FULBRIGHT & JAWORSKI L.L.P.
600 Congress Avenue, Suite 2400
Austin Texas, 78701-3271

In re Application of
Chada et al.
Serial No.: 10/017,472
Filed: December 7, 2001
Attorney Dkt No.: INGN:097US

Decision on Petition

This letter is in response to the Petition under 37 C.F.R. 1.144, filed on December 28, 2004, petitioning the denial that claims 1 and 36 are proper linking claims. The delay in acting on this petition is regretted.

BACKGROUND

A review of the file history shows that the application was filed on December 7, 2001 with 67 claims.

A requirement for restriction was mailed to applicants on February 24, 2003, requiring the restriction of the 67 claims to one of four inventions. The claims were restricted as follows:

Restriction to one of the following inventions was required under 35 U.S.C. 121:

I. Claims 1-43 are drawn to a method for inhibiting angiogenesis or endothelial cell differentiation comprising administering to a patient a nucleic acid expressing the human MDA-7 polypeptide. Classified in Class 514, subclass 44.

II. Claims 1-6, and 13-41 are drawn to a method comprising administering to a patient a human MDA-7 polypeptide. Classified in Class 514, subclass 2.

III. Claims 44-67 are drawn to a method for promoting an immune response comprising administering to a patient a nucleic acid expressing the human MDA-7 polypeptide and an antigen. Classified in Class 514, subclass 44, and class 424, subclass 184.1.

IV. Claims 44-51, and 56-67 are drawn to a method for promoting an immune response comprising administering to a patient a human MDA-7 polypeptide and an antigen. Classified in Class 514, subclass 2, and class 424, subclass 184.1.

In the response dated March 17, 2003, applicants elected **without traverse** the claims of Group I, claims 1-43, directed to a method for inhibiting angiogenesis or endothelial cell

differentiation comprising administering to a patient a nucleic acid expressing the human MDA-7 polypeptide. In addition to applicants election, applicants submitted that claims 1 and 36 are proper linking claims covering both Groups I and II and that if claims 1 and 36 are found allowable, the Group II claims must be rejoined and considered for allowance.

On September 30, 2003, applicants election was acknowledged and applicants comments regarding claims 1 and 36 found non-persuasive and a first office action on the merits was mailed to applicants in which claims 1-4, 7-25 and 32-43 were rejected under 35 USC 12 first paragraph, claim 9 was rejected under 35 USC 112 second paragraph, claims 1-4, 7-25 and 35-43 were rejected under 102(e), claims 1, 7-9, 20-23, 36-41, 75 and 76 were rejected under 103(a) and claims 1-4, 7-25, 32, 35-43 and 77 were rejected under double patenting. Additionally, claims 1, 13, 18-23, 36-41, 75 and 76 were objected to because the claims encompass more than one invention. In response to this action, applicants amended claims 1, 15-17 and 36, added new claims 75-77, and argued the previous rejections.

On June 14, 2004, a final rejection was mailed to applicants in which claims 1-4, 7-25 and 32-43 were rejected under 35 USC 12 first paragraph, claims 1, 9, 15-17, 75 and 76 were rejected under 35 USC 112 second paragraph, claims 1-4, 7-25 and 35-43 were rejected 102(e) and claims 1, 7-9, 20-23 and 36-41 were rejected under 103(a) and claims 1-4, 7-25, 32, 35-43 and 77 were rejected under double patenting. Additionally claims 1, 13, 18-23 and 36-38 were objected to because the claims encompass more than one invention.

In response to the final rejection, applicants filed proposed amended claims 9, 15-17 and 39, arguments supporting applicants position and the instant petition in which applicants petition the denial that claims 1 and 36 are proper linking claims.

DISCUSSION

The application, file history and petition have been considered carefully. Before the merits of the petition are addressed, a review of the claims, as pending and the claims under examination is warranted. Representative claims are shown below.

1. **(Previously presented) A method of inhibiting angiogenesis in a human patient in need of such treatment comprising administering to the patient an effective amount of a human melanoma differentiation antigen-7 (MDA-7) polypeptide or a nucleic acid expressing the human MDA-7 polypeptide in eukaryotic cells to inhibit angiogenesis.**

25. **(Original) The method of claim 1, wherein the MDA polypeptide comprises amino acids from 1 to 206 of SEQ ID NO:2.**

26.-31. **(Cancelled)**

32. **(Original) The method of claim 1, wherein the MDA polypeptide comprises amino acids from 182 to 206 of SEQ ID NO:2.**

36. **(Previously presented) A method of inhibiting endothelial cell differentiation in a human patient comprising administering to the patient an effective amount of a human MDA-7 polypeptide or a nucleic acid molecule expressing the human MDA-7 polypeptide.**

68. **(Withdrawn) The method of claim 32, wherein the MDA polypeptide comprises amino acids from 175 to 206 of SEQ ID NO:2.**

69. **(Withdrawn) The method of claim 68, wherein the MDA polypeptide comprises amino acids from 150 to 206 of SEQ ID NO:2.**

70. **(Withdrawn) The method of claim 69, wherein the MDA polypeptide comprises amino acids from 125 to 206 of SEQ ID NO:2.**

71. **(Withdrawn) The method of claim 70, wherein the MDA polypeptide comprises amino acids from about 100 to about 206 of SEQ ID NO:2.**

72. **(Withdrawn) The method of claim 71, wherein the MDA polypeptide comprises amino acids from 75 to 206 of SEQ ID NO:1.**

73. **(Withdrawn) The method of claim 72, wherein the MDA polypeptide comprises amino acids from 49 to 206 of SEQ ID NO:2.**

Text below is taken from the Final Office action mailed 15 June 2004 in which the Examiner stated that claims 68-74 are not proper dependent claims because they encompass rather than further limit the sequence in claim 32.

In the 2/2/04 response, Applicants indicated that the withdrawal of claims 68-74 from consideration is inappropriate because they depend from the elected species in claim 32. In response, claims 68-74 are drawn to various fragments of SEQ ID No: 2 that differ from the elected species in length or sequence composition and thus are distinct from the elected species. Applicants are reminded that the elected species is directed to the amino acids 182-206 of SEQ ID No: 2 as indicated in the response submitted 7/7/03. Moreover, it is noteworthy that the dependencies of claims 68-74 are improper because the sequences of claims 68-74 encompass rather then further limit the sequence recited in claim 32. Accordingly, it is appropriate to withdraw these claims from consideration by the Examiner pursuant to 37 CFR 1.142(b), as being drawn to non-elected inventions, there being no allowable generic or linking claim.

Claims 1, 15-17, and 36 have been amended, and claims 75-77 are newly submitted. Claims 1-25, 32-43, and 68-77 are pending. Claims 1-4, 7-25, 32-43, and 75-77 are under current examination.

An election of species requirement between the various ranges of SEQ ID No 1 was improper, as the ranges are not species, but rather varying scope of an invention which requires the fewest limitations, residues 182-206. Claim 32 is a generic claim. Claim 25, fully defined, is a species claim. Claims 68-74 recite gradations in scope between claims 32 (the broadest in scope) and claim 25, the narrowest). Because of the overlap in scope, compounded by the fact that both the broadest and narrowest claims have already been examined, the withdrawal of claims 68-74 was improper.

The finality of the Office action sent 15 June 2004 is hereby withdrawn. Claims 68-74 are joined to Group I and under examination.

Turning now to the merits of the petition, applicants argue that claims 1 and 36 are linking claims and as such, must be examined with any of the linked inventions.

Applicants are correct that claims 1 and 36 recite in the alternative the inventions of Groups I and II, however that does not make claims 1 and 36 "linking claims." Claims 1 and 36 recite limitations in the alternative and as such, are in Markush-type format. A linking claim for Groups I and II would be in the format of

> Example of a Linking claim. A method of inhibiting angiogenesis in a human patient in need of such a treatment comprising elevating the amount of MDA-7 polypeptide in a patient to inhibit angiogenesis.

Should such a claim be present and allowable, then any claims which require all the features of the claim (such as those in the pending claim set) would ordinarily also be novel and obvious.

Claims 1 and 36 recite limitations in the alternative, in Markush-type format. MPEP 2173.05(h) states that

> The materials set forth in the Markush group ordinarily must belong to a recognized physical or chemical class or to an art-recognized class. However, when the Markush group occurs in a claim reciting a process or a combination (not a single compound), it is sufficient if the members of the group are disclosed in the specification to possess at least one property in common which is mainly responsible for their function in the claimed relationship, and it is clear from their very nature or from the prior art that all of them possess this property.

Even if the elected invention were in novel and unobvious, as evidenced by the outstanding rejection under 35 USC 112, for lack of enablement, it is not clear that the instant inventions possess a property in common that is mainly responsible for their function in the claimed method. As such, Group I and II do not qualify for election of species examination practice under 803.02.

Even if applicants can provide sufficiency for the Markush group, MPEP 803.02 then goes on to describe examination practice for Markush-type claims- if prior art is found on the elected

species then the provisional election takes effect and there is no requirement for the Office to extend the search to non-elected inventions.

Because claims 1 and 36 are not in condition for allowance, the request for examination of any "linked claims" is premature. Even if the members of the Markush group are disclosed in the specification to possess at least one property in common which is mainly responsible for their function in the claimed relationship and it is clear from their very nature or from the prior art that all of them possess this property, because the elected invention is not novel and unobvious, the request to have examination extended to other members of the Markush-type group is premature.

DECISION

For these reasons, the petition under 37 C.F.R. 1.144 to request reconsideration of linking claim and withdrawal of claims directed to non-elected species is **GRANTED-IN-PART**.

The request to have Group II examined along with the elected invention of Group I is **DENIED** for the reasons set forth above.

The objection and withdrawal of claims 68-74 from examination and the finality of the Office action mailed 15 June 2004 is improper; rejoinder of claims 68-74 with the elected invention is **GRANTED**.

Finality of the Office action mailed 15 June 2004 is withdrawn.

The application will be forwarded to the Examiner for preparation of an Office action consistent with this decision and taking into account the responses filed since the last Office action.

Any request for consideration must be filed within two (2) months of the mailing date of this decision.

Should there be any questions regarding this decision, please contact Special Program Examiner Julie Burke, by mail addressed to Director, Technology Center 1600, PO BOX 1450, ALEXANDRIA, VA 22313-1450, or by telephone at (571) 272-1600 or by Official Fax at 703-872-9306.

Jasemine C. Chambers

Jasemine Chambers
Director, Technology Center 1600.

SPE RESPONSE FOR CERTIFICATE OF CORRECTION

Paper No.:1

DATE : April 21, 2005

TO SPE OF : ART UNIT

SUBJECT : Request for Certificate of Correction on Patent No.: 6,808,032 B2

A response is requested with respect to the accompanying request for a certificate of correction.

Please complete this form and return with file, within **7** days to:
Certificates of Correction Branch - PK 3-910
Palm location **7590** - Tel. No. 305-8201

With respect to the change(s) requested, correcting Office and/or Applicant's errors, should the patent read as shown in the certificate of correction? No new matter should be introduced, nor should the scope or meaning of the claims be changed.

Thank You For Your Assistance **Certificates of Correction Branch**

The request for issuing the above-identified correction(s) is hereby:
Note your decision on the appropriate box.

- [x] **Approved** — **All** changes apply.
- [ ] **Approved in Part** — Specify below which changes **do not** apply.
- [ ] **Denied** — State the reasons for denial below.

Comments: Corrections do not effect patentability.

SPE: Lesley D. Morris **Art Unit** 3611

Lesley D. Morris

PTOL-306 (Rev. 7/03) U.S. DEPARTMENT OF COMMERCE Patent and Trademark Office

4.25.5

UNITED STATES PATENT AND TRADEMARK OFFICE

COMMISSIONER FOR PATENTS
UNITED STATES PATENT AND TRADEMARK OFFICE
WASHINGTON, D.C. 20231
www.uspto.gov

Paper No. 7

COPY MAILED

JUL 1 2 2002

OFFICE OF PETITIONS

Ronald J. Baron, Esq.
HOFFMANN & BARON, LLP
6900 Jericho Turnpike
Syosset NY 11791

In re Application of
Kay, *et al.*
Application No. 10/017,478
Filed: December 14, 2001
Attorney Docket Number: 1040-3

DECISION REFUSING STATUS
UNDER 37 C.F.R. §1.47(a)

This is in response to the April 12, 2002 petition Under 37 C.F.R. §1.47(a).

HISTORY

Applicant filed the above-identified application on September 19, 2001, naming Robert A. Kay and Larry K. Thomas as joint inventors. However, the application as filed did not include the declaration executed as required by 37 C.F.R. §1.53.

Accordingly, on January 9, 2002, the Office of Initial Patent Examination mailed a notice to file missing parts (hereinafter "the notice") to the address of record.[1] A two month extendable deadline was set for filing a reply.

Petitioner filed this reply on April 13, 2002, which, with the accompanying petition for a one month extension of time, was timely.

LAW

§ 1.47 Filing when an inventor refuses to sign or cannot be reached.

> (a) If a joint inventor refuses to join in an application for patent or cannot be found or reached after diligent effort, the application may be made by the other inventor on behalf of himself or herself and the nonsigning inventor. The oath or declaration in such an application must be accompanied by a petition including proof of the pertinent facts, the fee set forth in §1.17(l) and the last known address of the nonsigning inventor. The Patent and Trademark Office shall, except in a continued prosecution application under §1.53(d), forward notice of the filing of the application to the nonsigning inventor at said address and publish notice of the filing of the application in the Official Gazette. The nonsigning inventor may subsequently join in the application on filing an oath or declaration complying with §1.63.

ANALYSIS

Petitioner has failed to demonstrate that the nonsigning inventor has been provided with a complete copy of the application. Rather, Petitioner has simply demonstrated that a declaration and power of attorney were sent to the nonsignor.

---

[1] The statutory filing fee was also missing.

Before a refusal can be alleged, it must be demonstrated that a *bona fide* attempt was made to present a copy of the application papers (specification, including claims, drawings, and oath or declaration) to the non-signing inventor for signature. A copy of the application papers should be sent to the last known address of the nonsigning inventor, or, if the nonsigning inventor is represented by counsel, to the address of the nonsigning inventor's attorney.[2] Under the provisions of 37 C.F.R. §1.63(b)(2), a valid declaration must "state that the person making the oath or declaration has reviewed and understands the contents of the application, including the claims, as amended by any amendment specifically referred to in the oath or declaration." Thus, an inventor cannot make a valid declaration without having had the opportunity to review the application papers. This is why the Office requires that a copy of the papers be sent or delivered to the nonsignor before rule 47 status will be granted. Simply put, an inventor must be given the opportunity to review the entire application before a valid declaration can be made. Until such time as the application has been sent or delivered to the nonsignor, it cannot be said that the inventor has been given a *bona fide* opportunity to make the required declaration.

Petitioner is advised to consult the M.P.E.P. §409.03(d) for further information on what kind of showing is required to prove that the nonsigning inventor has refused to sign the declaration.

Because of the foregoing, this petition is *dismissed*.

Any request for reconsideration of this decision must be submitted within TWO (2) MONTHS from the mail date of this decision. Extensions of time under 37 C.F.R. §1.136(a) are permitted. The reconsideration request should include a cover letter entitled "Renewed Petition under 37 C.F.R. §1.47(a)".

Further correspondence with respect to this matter should be addressed as follows:

By mail:	Assistant Commissioner for Patents Box DAC Washington, D.C. 20231
By FAX:	(703) 308-6916 Attn: Special Program Law Office
By hand:	Crystal Plaza Four, Suite 3C23 2201 S. Clark Place Arlington, VA

[2] M.P.E.P. §409.03(d)

Telephone inquiries related to this decision should be directed to the undersigned at (703) 306-5593.

Scott M. Ledford
Attorney
Office of Petitions
Office of the Deputy Assistant Commissioner
for Patent Policy and Projects

UNITED STATES PATENT AND TRADEMARK OFFICE

Commissioner for Patents
United States Patent and Trademark Office
P.O. Box 1450
Alexandria, VA 22313-1450
www.uspto.gov

MILLEN, WHITE, ZELANO & BRANIGAN, P.C.
2200 CLARENDON BLVD.
SUITE 1400
ARLINGTON VA 22201

COPY MAILED

DEC 28 2005

OFFICE OF PETITIONS

In re Application of

Gerhard Edler

Application No. 10/017,481

Filed: December 18, 2001

Attorney Docket No. LEIF-5

DECISION ON PETITION

This is a decision on the petition under 37 CFR 1.181(a) to withdraw the holding of abandonment, filed June 27, 2005.

The petition under 37 CFR 1.181(a) to withdraw the holding of abandonment is **granted**.

This application was held abandoned on August 10, 2004, after it was believed that no response was received to the Corrected Notice of Allowance and Issue Fee Due, mailed January 21, 2004. The date of abandonment was mailed November 11, 2004, and a Notice of Abandonment was mailed on September 9, 2004.

A review of the record reveals that a Notice of Allowance and Issue Fee Due was mailed on January 21, 2004, requiring payment of the issue fee and publication fee. The notice set a statutory period for reply of three months from its mailing date. The issue fee and publication fee were received on April 13, 2004. The record further reveals that a Corrected Notice of Allowance and Issue Fee Due was mailed on January 21, 2004, noting a zero amount due for the issue fee and publication fee. Yet, the application was held abandoned on April 22, 2004, for failure to pay the issue fee. The abandonment of the application was improper as the issue fee and publication were, in fact, paid on April 13, 2004. The holding of abandonment is withdrawn accordingly.

The application file is being directed to the Office of Patent Publications for processing into a patent.

Kenya A. McLaughlin
Petitions Attorney
Office of Petitions

UNITED STATES PATENT AND TRADEMARK OFFICE

Commissioner for Patents
United States Patent and Trademark Office
P.O. Box 1450
Alexandria, VA 22313-1450
www.uspto.gov

Paper No.

SEED INTELLECTUAL PROPERTY
LAW GROUP PLLC
701 FIFTH AVE
SUITE 6300
SEATTLE WA 98104-7092

COPY MAILED
OCT 0 2 2006
OFFICE OF PETITIONS

In re Application of	:	
Wardrop et al.	:	DECISION ON APPLICATION
Application No. 10/017,483	:	FOR
Filed: December 14, 2001	:	PATENT TERM ADJUSTMENT
Atty Docket No. 130109.431	:	

This is a decision on the "APPLICATION FOR PATENT TERM ADJUSTMENT UNDER 37 CFR 1.705(b)," filed August 2, 2006. Applicants request that the initial determination of patent term adjustment under 35 U.S.C. 154(b) be corrected from six hundred sixty-seven (667) days to seven hundred ten (710) days.

The application for patent term adjustment is **GRANTED to the extent indicated herein**.

The Office has updated the PAIR screen to reflect that the correct Patent Term Adjustment (PTA) determination at the time of the mailing of the notice of allowance is **seven hundred eleven (711)** days. A copy of the updated PAIR screen, showing the correct determination, is enclosed.

On May 2, 2006, the Office mailed the Determination of Patent Term Adjustment under 35 U.S.C. 154(b) in the above-identified application. The Notice stated that the patent term adjustment (PTA) to date is 667 days. On August 2, 2006, applicants timely submitted the instant application for patent term adjustment[1]. Applicants dispute the reduction of 44 days associated with the

[1] PALM records indicate that the Issue Payment was also filed on August 2, 2006.

filing of a supplemental Information Disclosure Statement on August 27, 2003. Applicants assert that the reduction is not warranted because the IDS was filed in compliance with the requirements of 37 C.F.R. § 1.704(d).

Applicants note that this application is not subject to a terminal disclaimer.

As of August 27, 2003, 37 C.F.R. § 1.704(d) provided that:

> A paper containing only an information disclosure statement in compliance with §§ 1.97 and 1.98 will not be considered a failure to engage in reasonable efforts to conclude prosecution (processing or examination) of the application under paragraphs (c)(6), (c)(8), (c)(9), or (c)(10) of this section if it is accompanied by a statement that each item of information contained in the information disclosure statement was cited in any communication from a foreign patent office in a counterpart application and that this communication was not received by any individual designated in § 1.56(c) more than thirty days prior to the filing of the information disclosure statement. This thirty-day period is not extendable.

A review of the supplemental IDS filed August 27, 2003 included such a statement. However, instead of stating "each item of information," applicants stated "each of the references set forth on the attached form PTO-1449." Petitioner should track the exact language of § 1.704(d). Nonetheless, in this instance, it is concluded that given the statement therein the filing of the supplemental IDS is not considered a failure to engage and the reduction of 44 days is not warranted.

However, applicants are reminded that, effective May 24, 2004, Section 1.704(d) was amended to change "cited in a communication" to "first cited in any communication" in order to clarify that the item must have been first cited in any communication from a foreign patent office in a counterpart application instead of merely being cited in such a communication. An applicant who fails to cite an item, within thirty days of receipt by an individual designated in Sec. 1.56(c) of a first communication from a foreign patent office in a counterpart application citing the item, and instead files an information disclosure statement, within thirty days of a subsequent communication citing the item, cannot be considered

to have acted with reasonable efforts to conclude prosecution of the application. The change to require that this thirty-day time period run from a first communication parallels the corresponding language in Sec. 1.97(e)(1). The provisions of Sec. 1.704(d) do not apply if the applicant does not submit the information disclosure statement within thirty days of a first communication including a citation of an item to a party designated in Sec. 1.56(c). In such situations, the submission of an information disclosure statement may be considered a failure to engage in reasonable efforts to conclude prosecution (processing or examination) of the application under Sec. 1.704(c)(6), (c)(8), (c)(9), or (c)(10). See Revision of Patent Term Extension and Patent Term Adjustment Provisions, Final Rule, 69 FR 21704 (April 22, 2004).

In view thereof, the reduction of 44 days is being removed.

However, given the clarification set forth in this rule, applicants are reminded of their duty of good faith and candor to the Office. Thus, applicants should advise the Office if the statement made under the previous rule was made within thirty days of a subsequent communication citing the item (rather than "first cited").

Moreover, it is noted that the number of days in the period for the Office delay associated with the Appeal Process is 673 days, not 672 days.

Accordingly, the determination of patent term adjustment at the time of the mailing of the notice of allowance is 711 days.

It is noted that the NOTICE OF NON-COMPLIANT INFORMATION DISCLOSURE STATEMENT mailed August 11, 2006 appears to have been mailed in error. The record before the undersigned indicates that the only IDS "filed" after the payment of the Issue Fee was the copy of the previously filed IDS submitted as evidence in the instant application for patent term adjustment. The Technology Center has been directed to reconsider the propriety of the Notice.

Receipt of the $200.00 fee set forth in 37 CFR 1.18(e) is acknowledged. No additional fees are required.

The application is being forwarded to the Office of Patent Publication for timely issuance of the patent.

Telephone inquiries specific to this matter should be directed to the undersigned at (571) 272-3219.

Nancy Johnson
Senior Petitions Attorney
Office of Petitions

Enclosure: Copy of REVISED PAIR Screen

UNITED STATES PATENT AND TRADEMARK OFFICE

COMMISSIONER FOR PATENTS
UNITED STATES PATENT AND TRADEMARK OFFICE
P.O. BOX 1450
ALEXANDRIA, VA 22313-1450
www.uspto.gov

STOEL RIVES LLP
900 SW FIFTH AVENUE
SUITE 2600
PORTLAND, OR 97204-1268

COPY MAILED
APR 1 2 2006
OFFICE OF PETITIONS

In re Application of	:	
Brian W. Baird, et al.	:	
Application No. 10/017,497	:	ON PETITION
Filed: December 14, 2001	:	
Attorney Docket No.: 50001/83:2 USA	:	

This is a decision on the petition, filed April 11, 2006, under 37 CFR 1.313(c)(2) to withdraw the above-identified application from issue after payment of the issue fee.

The petition is **GRANTED**.

The above-identified application is withdrawn from issue for consideration of a submission under 37 CFR 1.114 (request for continued examination). See 37 CFR 1.313(c)(2).

Petitioner is advised that the issue fee paid on October 28, 2005, in the above-identified application cannot be refunded. If, however, the above-identified application is again allowed, petitioner may request that it be applied towards the issue fee required by the new Notice of Allowance. [1]

Telephone inquiries relating to this decision should be directed to the undersigned at (571) 272-3204.

The application is being referred to Technology Center AU 1732 for further processing of the request for continued examination under 37 CFR 1.114.

Sherry D. Brinkley
Petitions Examiner
Office of Petitions

[1]The request to apply the issue fee to the new Notice may be satisfied by completing and returning the new Issue Fee Transmittal Form PTOL-85(b), which includes the following language thereon: " Commissioner for Patents is requested to apply the Issue Fee and Publication Fee (if any) or re-apply any previously paid issue fee to the application identified above." Petitioner is advised that, whether a fee is indicated as being due or not, the Issue Fee Transmittal Form **must** be completed and timely submitted to avoid abandonment. Note the language in bold text on the first page of the Notice of Allowance and Fee(s) Due (PTOL-85).

UNITED STATES PATENT AND TRADEMARK OFFICE

Commissioner for Patents
United States Patent and Trademark Office
P.O. Box 1450
Alexandria, VA 22313-1450
www.uspto.gov

COPY MAILED
APR 12 2006
OFFICE OF PETITIONS

Date : April 12, 2006

TO : Director, Office of Patent Publication

FROM : Office of the Deputy Commissioner for Patent Examination Policy

SUBJECT : Withdrawal from Issue of

Applicant(s) : Brian W. Baird, et al.
Application No. : 10/017,497
Filed : December 14, 2001

The above-identified application has been assigned Patent No. 7,029,619 and an issue date of April 18, 2006.

It is hereby directed that this application be withdrawn from issue at the request of the applicant.

Do not refund the issue fee.

The following erratum should be published in the Official Gazette if the above-identified application is published in the OG of April 18, 2006:

> "All reference to Patent No. 7,029,619 to BRIAN W. BAIRD, ET AL. of OREGON for ULTRAVIOLET LASER ABLATIVE PATTERNING OF MICROSTRUCTURES IN SEMICONDUCTORS appearing in the Official Gazette of April 18, 2006, should be deleted since no patent was granted."

Sherry D. Brinkley
Petitions Examiner
Office of Petitions

cc: Paul Harrison, Crystal Park 3-44l (FAX-306-2737)
Deneise Boyd, Crystal Park 2, Suite 1100 (FAX-308-5413)
Mary Louise McAskill, Crystal Park 3-910 (FAX 305-4372)
Niomi Farmer, Crystal Park 3-9l0 (FAX-305-4372)
Mary E. Johnson (Cookie), P/OCS, CM1-6D07
Duane K.Davis, P/OCS, CM1-6A07
Tamara K. Greene, PK3-910

SPE: C. Johnson

SPE RESPONSE FOR CERTIFICATE OF CORRECTION

Paper No.: _____

DATE : 7/12/07

TO SPE OF : ART UNIT 1732

SUBJECT : Request for Certificate of Correction for Appl. No.: 10/017,497 Patent No.: 7157038

Please respond to this request for a certificate of correction within 7 days.

Please review the requested changes/corrections as shown in the COCIN document(s) in the IFW application image. No new matter should be introduced, nor should the scope or meaning of the claims be changed.

Please complete the response (see below) and forward the completed response to scanning using document code **COCX**.

Lamonte M. Newsome
Certificates of Correction Branch
703-308-9390 ext. 112

Thank You For Your Assistance

The request for issuing the above-identified correction(s) is hereby:

Note your decision on the appropriate box.

- ☒ **Approved** — All changes apply.
- ☐ **Approved in Part** — Specify below which changes **do not** apply.
- ☐ **Denied** — State the reasons for denial below.

Comments: _____

SPE Christina Johnson — 1732 Art Unit

UNITED STATES PATENT AND TRADEMARK OFFICE

Commissioner for Patents
United States Patent and Trademark Office
P.O. Box 1450
Alexandria, VA 22313-1450
www.uspto.gov

TOWNSEND AND TOWNSEND AND CREW, LLP
TWO EMBARCADERO CENTER
EIGHTH FLOOR
SAN FRANCISCO CA 94111-3834

COPY MAILED

AUG 3 0 2004

OFFICE OF PETITIONS

In re Application of	:
Motasim Sirhan et al.	: DECISION ON PETITIONS
Application No. 10/017,500	: UNDER 37 CFR 1.78(a)(3) AND
Filed: December 14, 2001	: UNDER 37 CFR 1.78(a)(6)
Attorney Docket No. 020460-001000US	:

This is a decision on the petition under 37 CFR §§ 1.78(a)(3) and 1.78(a)(6), filed July 19, 2004, to accept an unintentionally delayed claim under 35 U.S.C. §§ 120 and 119(e) for the benefit of the prior-filed nonprovisional and provisional applications set forth in the concurrently filed amendment.

The petition is **DISMISSED**.

A petition for acceptance of a claim for late priority under 37 CFR §§ 1.78(a)(3) and 1.78(a)(6) is only applicable to those applications filed on or after November 29, 2000. Further, the petition is appropriate only after the expiration of the period specified in 37 CFR §§ 1.78(a)(2)(ii) and 1.78(a)(5)(ii). In addition, the petition under 37 CFR §§ 1.78(a)(3) and 1.78(a)(6) must be accompanied by:

(1) the reference required by 35 U.S.C. §§ 120 and 119(e) and 37 CFR §§ 1.78(a)(2)(I) and 1.78(a)(5)(I) of the prior-filed application, unless previously submitted;
(2) the surcharge set forth in § 1.17(t); and
(3) a statement that the entire delay between the date the claim was due under 37 CFR §§ 1.78(a)(2)(ii) and 1.78(a)(5)(ii) and the date the claim was filed was unintentional. The Commissioner may require additional where there is a question whether the delay was unintentional.

The petition fails to comply with item (1) above.

A reference to add the prior-filed applications on page one following the first sentence

of the specification has been included in an amendment filed on July 19, 2004. However, the amendment is not acceptable as drafted since it improperly incorporates by reference the prior-filed applications. Petitioner's attention is directed to Dart Industries v. Banner, 636 F.2d 684, 207 USPQ 273 (C.A.D.C. 1980), where the court drew a distinction between a permissible 35 U.S.C. § 120 statement and the impermissible introduction of new matter by way of incorporation by reference in a 35 U.S.C. § 120 statement. The court specifically stated:

> Section 120 merely provides a mechanism whereby an application becomes entitled to benefit of the filing date of an earlier application disclosing the same subject matter. Common subject matter must be disclosed, in both applications, either specifically or by an express incorporation-by-reference of prior disclosed subject matter. Nothing in section 120 itself operates to carry forward any disclosure from an earlier application. In re deSeversky, supra at 674, 177 USPQ at 146-147. Section 120 contains no magical disclosure-augmenting powers able to pierce new matter barriers. It cannot, therefore, "limit" the absolute and express prohibition against new matter contained in section 251.

In order for the incorporation by reference statement to be effective as a proper safeguard against the omission of a portion of a prior application, the incorporation by reference statement must be included in the specification-as-filed, or in an amendment specifically referred to in an oath or declaration executing the application. *See* In re deSeversky, *supra*. *Note also* MPEP 201.06(c).

Accordingly, before the petition under 37 CFR §§ 1.78(a)(3) and 1.78(a)(6) can be granted, a renewed petition under 37 CFR §§ 1.78(a)(3) and 1.78(a)(6) and a substitute amendment[1] deleting the improper incorporation by reference statement is required.

Further correspondence with respect to this matter should be addressed as follows:

By mail: Mail Stop PETITIONS
Commissioner for Patents
Post Office Box 1450
Alexandria, VA 22313-1450

---

[1] *Note* 37 CFR 1.121.

By hand: Customer Window located at:

2011 South Clark Place
Crystal Plaza Two Lobby
Room 1B03
Arlington, VA 22202

By fax: (703) 872-9306
ATTN: Office of Petitions

Any inquiries concerning this decision may be directed to Senior Petitions Attorney Patricia Faison-Ball at (703)305-4497.[2]

Frances Hicks
Lead Petitions Examiner
Office of Petitions
Office of the Deputy Commissioner
for Patent Examination Policy

[2]Effective September 27, 2004, the phone number will be 571-272-3212.

UNITED STATES PATENT AND TRADEMARK OFFICE

Commissioner for Patents
United States Patent and Trademark Office
P.O. Box 1450
Alexandria, VA 22313-1450
www.uspto.gov

TOWNSEND AND TOWNSEND AND CREW, LLP
TWO EMBARCADERO CENTER
EIGHTH FLOOR
SAN FRANCISCO CA 94111-3834

COPY MAILED

MAY 1 0 2005

OFFICE OF PETITIONS

In re Application of
Motasim Sirhan et al.
Application No. 10/017,500
Filed: December 14, 2001
Attorney Docket No. 020460-001000US

: DECISION ON PETITIONS
: UNDER 37 CFR 1.78(a)(3) AND
: UNDER 37 CFR 1.78(a)(6)

This is a decision on the renewed petition under 37 CFR §§ 1.78(a)(3) and 1.78(a)(6), filed September 20, 2004, to accept an unintentionally delayed claim under 35 U.S.C. §§ 120 and 119(e) for the benefit of the prior-filed nonprovisional and provisional applications set forth in the concurrently filed amendment.

The renewed petition is **DISMISSED**.

A petition filed July 19, 2004 was dismissed August 30, 2004 because the amendment filed with the petition improperly incorporated by reference the prior filed application. Comes now petitioner with the instant renewed petition which still has not deleted the improper incorporation by reference statement from the amendment filed.

A petition for acceptance of a claim for late priority under 37 CFR §§ 1.78(a)(3) and 1.78(a)(6) is only applicable to those applications filed on or after November 29, 2000. Further, the petition is appropriate only after the expiration of the period specified in 37 CFR §§ 1.78(a)(2)(ii) and 1.78(a)(5)(ii). In addition, the petition under 37 CFR §§ 1.78(a)(3) and 1.78(a)(6) must be accompanied by:

(1) the reference required by 35 U.S.C. §§ 120 and 119(e) and 37 CFR §§ 1.78(a)(2)(I) and 1.78(a)(5)(I) of the prior-filed application, unless previously submitted;
(2) the surcharge set forth in § 1.17(t); and
(3) a statement that the entire delay between the date the claim was due under 37 CFR §§ 1.78(a)(2)(ii) and 1.78(a)(5)(ii) and the date the claim was filed was unintentional. The Commissioner may require additional where there is a question whether the delay was unintentional.

The petition still fails to comply with item (1) above.

A reference to add the prior-filed applications on page one following the first sentence of the specification has been included in an amendment filed on July 19, 2004 and again with the instant petition filed September 20, 2004. However, the amendment is not acceptable as drafted since it improperly incorporates by reference the prior-filed applications. Petitioner's attention is again directed to Dart Industries v. Banner, 636 F.2d 684, 207 USPQ 273 (C.A.D.C. 1980), where the court drew a distinction between a permissible 35 U.S.C. § 120 statement and the impermissible introduction of new matter by way of incorporation by reference in a 35 U.S.C. § 120 statement. The court specifically stated:

> Section 120 merely provides a mechanism whereby an application becomes entitled to benefit of the filing date of an earlier application disclosing the same subject matter. Common subject matter must be disclosed, in both applications, either specifically or by an express incorporation-by-reference of prior disclosed subject matter. Nothing in section 120 itself operates to carry forward any disclosure from an earlier application. In re deSeversky, supra at 674, 177 USPQ at 146-147. Section 120 contains no magical disclosure-augmenting powers able to pierce new matter barriers. It cannot, therefore, "limit" the absolute and express prohibition against new matter contained in section 251.

In order for the incorporation by reference statement to be effective as a proper safeguard against the omission of a portion of a prior application, the incorporation by reference statement must be included in the specification-as-filed, or in an amendment specifically referred to in an oath or declaration executing the application. *See* In re deSeversky, *supra*. *Note also* MPEP 201.06(c).

Accordingly, before the petition under 37 CFR §§ 1.78(a)(3) and 1.78(a)(6) can be granted, a renewed petition under 37 CFR §§ 1.78(a)(3) and 1.78(a)(6) and a substitute amendment[1] deleting the improper incorporation by reference statement is required.

Further correspondence with respect to this matter should be addressed as follows:

By mail: Mail Stop PETITIONS
Commissioner for Patents
Post Office Box 1450
Alexandria, VA 22313-1450

---

[1] *Note* 37 CFR 1.121

By hand: Customer Window located at:

2011 South Clark Place
Crystal Plaza Two Lobby
Room 1B03
Arlington, VA 22202

By fax: (703) 872-9306
ATTN: Office of Petitions

Any inquiries concerning this decision may be directed to Senior Petitions Attorney Patricia Faison-Ball at (571) 272-3212.

Frances Hicks
Lead Petitions Examiner
Office of Petitions
Office of the Deputy Commissioner
for Patent Examination Policy

UNITED STATES PATENT AND TRADEMARK OFFICE

Commissioner for Patents
United States Patent and Trademark Office
P.O. Box 1450
Alexandria, VA 22313-1450
www.uspto.gov

TOWNSEND AND TOWNSEND AND CREW, LLP
TWO EMBARCADERO CENTER
EIGHTH FLOOR
SAN FRANCISCO CA 94111-3834

COPY MAILED

MAY 1 0 2005

OFFICE OF PETITIONS

In re Application of
Motasim Sirhan et al.
Application No. 10/017,500
Filed: December 14, 2001
Attorney Docket No. 020460-001000US

: DECISION ON PETITIONS
: UNDER 37 CFR 1.78(a)(3) AND
: UNDER 37 CFR 1.78(a)(6)

This is a decision on the renewed petition under 37 CFR §§ 1.78(a)(3) and 1.78(a)(6), filed September 20, 2004, to accept an unintentionally delayed claim under 35 U.S.C. §§ 120 and 119(e) for the benefit of the prior-filed nonprovisional and provisional applications set forth in the concurrently filed amendment.

The renewed petition is **DISMISSED**.

A petition filed July 19, 2004 was dismissed August 30, 2004 because the amendment filed with the petition improperly incorporated by reference the prior filed application. Comes now petitioner with the instant renewed petition which still has not deleted the improper incorporation by reference statement from the amendment filed.

A petition for acceptance of a claim for late priority under 37 CFR §§ 1.78(a)(3) and 1.78(a)(6) is only applicable to those applications filed on or after November 29, 2000. Further, the petition is appropriate only after the expiration of the period specified in 37 CFR §§ 1.78(a)(2)(ii) and 1.78(a)(5)(ii). In addition, the petition under 37 CFR §§ 1.78(a)(3) and 1.78(a)(6) must be accompanied by:

(1) the reference required by 35 U.S.C. §§ 120 and 119(e) and 37 CFR §§ 1.78(a)(2)(I) and 1.78(a)(5)(I) of the prior-filed application, unless previously submitted;
(2) the surcharge set forth in § 1.17(t); and
(3) a statement that the entire delay between the date the claim was due under 37 CFR §§ 1.78(a)(2)(ii) and 1.78(a)(5)(ii) and the date the claim was filed was unintentional. The Commissioner may require additional where there is a question whether the delay was unintentional.

The petition still fails to comply with item (1) above.

A reference to add the prior-filed applications on page one following the first sentence of the specification has been included in an amendment filed on July 19, 2004 and again with the instant petition filed September 20, 2004. However, the amendment is not acceptable as drafted since it improperly incorporates by reference the prior-filed applications. Petitioner's attention is again directed to Dart Industries v. Banner, 636 F.2d 684, 207 USPQ 273 (C.A.D.C. 1980), where the court drew a distinction between a permissible 35 U.S.C. § 120 statement and the impermissible introduction of new matter by way of incorporation by reference in a 35 U.S.C. § 120 statement. The court specifically stated:

> Section 120 merely provides a mechanism whereby an application becomes entitled to benefit of the filing date of an earlier application disclosing the same subject matter. Common subject matter must be disclosed, in both applications, either specifically or by an express incorporation-by-reference of prior disclosed subject matter. Nothing in section 120 itself operates to carry forward any disclosure from an earlier application. In re deSeversky, supra at 674, 177 USPQ at 146-147. Section 120 contains no magical disclosure-augmenting powers able to pierce new matter barriers. It cannot, therefore, "limit" the absolute and express prohibition against new matter contained in section 251.

In order for the incorporation by reference statement to be effective as a proper safeguard against the omission of a portion of a prior application, the incorporation by reference statement must be included in the specification-as-filed, or in an amendment specifically referred to in an oath or declaration executing the application. *See* In re deSeversky, *supra*. *Note also* MPEP 201.06(c).

Accordingly, before the petition under 37 CFR §§ 1.78(a)(3) and 1.78(a)(6) can be granted, a renewed petition under 37 CFR §§ 1.78(a)(3) and 1.78(a)(6) and a substitute amendment[1] deleting the improper incorporation by reference statement is required.

Further correspondence with respect to this matter should be addressed as follows:

By mail: Mail Stop PETITIONS
Commissioner for Patents
Post Office Box 1450
Alexandria, VA 22313-1450

---

[1] *Note* 37 CFR 1.121

By hand: Customer Window located at:

2011 South Clark Place
Crystal Plaza Two Lobby
Room 1B03
Arlington, VA 22202

By fax: (703) 872-9306
ATTN: Office of Petitions

Any inquiries concerning this decision may be directed to Senior Petitions Attorney Patricia Faison-Ball at (571) 272-3212.

Frances Hicks

Frances Hicks
Lead Petitions Examiner
Office of Petitions
Office of the Deputy Commissioner
for Patent Examination Policy

UNITED STATES PATENT AND TRADEMARK OFFICE

Commissioner for Patents
United States Patent and Trademark Office
P.O. Box 1450
Alexandria, VA 22313-1450
www.uspto.gov

TOWNSEND AND TOWNSEND AND CREW, LLP
TWO EMBARCADERO CENTER
EIGHTH FLOOR
SAN FRANCISCO CA 94111-3834

COPY MAILED

JUL 13 2005

OFFICE OF PETITIONS

In re Application of
Motasim Sirhan et al.
Application No. 10/017,500
Filed: December 14, 2001
Attorney Docket No. 020460-001000US

: DECISION ON PETITIONS
: UNDER 37 CFR 1.78(a)(3) AND
: UNDER 37 CFR 1.78(a)(6)

This is a decision on the second renewed petition under 37 CFR §§ 1.78(a)(3) and 1.78(a)(6), filed June 15, 2005, to accept an unintentionally delayed claim under 35 U.S.C. §§ 120 and 119(e) for the benefit of the prior-filed nonprovisional and provisional applications set forth in the concurrently filed amendment.

The second renewed petition is **GRANTED**.

A petition filed July 19, 2004 was dismissed August 30, 2004 because the amendment filed with the petition improperly incorporated by reference the prior filed applications. A renewed petition which still had not deleted the improper incorporation by reference statement from the amendment was filed September 20, 2004 and dismissed in a decision mailed May 15, 2005. Comes now petitioner with the second renewed petition deleting the improper incorporation by reference statement from the amendment filed.

A petition for acceptance of a claim for late priority under 37 CFR §§ 1.78(a)(3) and 1.78(a)(6) is only applicable to those applications filed on or after November 29, 2000. Further, the petition is appropriate only after the expiration of the period specified in 37 CFR §§ 1.78(a)(2)(ii) and 1.78(a)(5)(ii). In addition, the petition under 37 CFR §§ 1.78(a)(3) and 1.78(a)(6) must be accompanied by:

(1) the reference required by 35 U.S.C. §§ 120 and 119(e) and 37 CFR §§ 1.78(a)(2)(i) and 1.78(a)(5)(i) of the prior-filed application, unless previously submitted;
(2) the surcharge set forth in § 1.17(t); and
(3) a statement that the entire delay between the date the claim was due under 37 CFR §§ 1.78(a)(2)(ii) and 1.78(a)(5)(ii) and the date the claim was filed was unintentional. The Commissioner may require additional where there is a question whether the delay was unintentional.

The instant nonprovisional application was filed after November 29, 2000, and the claim herein for the benefit of priority to the prior-filed applications is submitted after expiration of the period specified in 37 CFR §§ 1.78(a)(2)(ii) and 1.78(a)(5)(ii). Therefore, this is a proper petition under 37 CFR §§ 1.78(a)(3) and 1.78(a)(6).

The instant nonprovisional application was pending at the time of filing of the reference to the prior-filed provisional application as required by 37 CFR 1.78(a)(5)(ii). Additionally, the intermediate non-provisional applications were filed within twelve months of the filing date of the prior-filed provisional application, Application No. 60/258,924, which was filed on December 22, 2000.

The petition complies with the requirements for a grantable petition under 37 CFR §§1.78(a)(3) and 1.78(a)(6) in that (1) a reference to the prior-filed applications has been included in an amendment to the first sentence of the specification following the title, as provided by 37 CFR §§ 1.78(a)(2)(iii) and 1.78(a)(5)(iii); (2) the surcharge fee required by 37 CFR 1.17(t) has been submitted; and (3) the petition contains an adequate statement of unintentional delay. Accordingly, having found that the instant petition for acceptance of an unintentionally delayed claim for the benefit of priority under 35 U.S.C. §§ 120 and 119(e) to the prior-filed applications satisfies the conditions of 37 CFR §§ 1.78(a)(3) and 1.78(a)(6), the petition is granted.

The granting of the petition to accept the delayed benefit claim to the prior-filed applications under 37 CFR §§ 1.78(a)(3) and 1.78(a)(6) should <u>not</u> be construed as meaning that the instant application is entitled to the benefit of the filing date of the prior-filed applications. In order for the instant application to be entitled to the benefit of the prior-filed applications, all other requirements under 35 U.S.C. §§120 and 365(c) and 1.78(a)(1) and (a)(2) and under 35 U.S.C. §119(e) and 37 CFR 1.78(a)(4) and (a)(5) must be met. Similarly, the fact that the corrected Filing Receipt accompanying this decision on petition includes the prior-filed applications should <u>not</u> be construed as meaning that applicant is entitled to the claim for benefit of priority to the prior-filed applications noted thereon. Accordingly, the examiner will, in due course, consider this benefit claim and determine whether the instant application is entitled to the benefit of the earlier filing date.

A corrected Filing Receipt, which includes the priority claim to the prior-filed applications, accompanies this decision on petition.

Any questions concerning this matter may be directed to Senior Petitions Attorney Patricia Faison-Ball at (571) 272-3212. All other inquiries concerning either the examination procedures or status of the application should be directed to the Technology Center.

The application is being forwarded to Technology Center AU 3738 for appropriate action on the amendment submitted June 15, 2005, including consideration by the examiner of the claim under 35 U.S.C. § 120 and 119(e) for the benefit of priority to the prior-filed applications.

Frances Hicks

Frances Hicks
Lead Petitions Examiner
Office of Petitions
Office of the Deputy Commissioner
for Patent Examination Policy

ATTACHMENT : Corrected Filing Receipt

UNITED STATES PATENT AND TRADEMARK OFFICE

Commissioner for Patents
United States Patent and Trademark Office
P.O. Box 1450
Alexandria, VA 22313-1450
www.uspto.gov

WITHROW & TERRANOVA
P.O. BOX 1287
CARY, NC 27512

COPY MAILED
MAY 15 2006
OFFICE OF PETITIONS

In re Application of
Heinz Koppl et al
Application No. 10/017,506
Filed: December 14, 2001
Attorney Docket No. 1011-001-002

DECISION ON PETITION
TO WITHDRAW
FROM RECORD

This is a decision on the Request to Withdraw as attorney or agent of record under 37 C.F.R. § 1.36(b), filed November 9, 2005, and resubmitted on December 23, 2005 and February 17, 2006.

The petition is **NOT APPROVED**.

A review of the file record indicates that the power of attorney appearing in the oath filed on March 11, 2002, to Benjamin S. Withrow, along with all of the other attorneys associated with the law firm of Withrow & Terranova (Customer No. 27820), has been revoked by the assignee of the patent application. Accordingly, the request to withdraw under 37 C.F.R. §1.36(b) is **moot**.

All future communications from the Office will be directed to the below-listed address of record until otherwise notified by applicant.

This application is being referred to Technology Center AU 2123 to consider the Request for Continued Examination (RCE) filed March 27, 2006.

Telephone inquiries concerning this decision should be directed to Karen Creasy at 571-272- 3208.

Amelia Au
Petitions Examiner
Office of Petitions

cc:

JENKINS, WILSON, TAYLOR & HUNT
3100 TOWER BLVD
SUITE 1200
DURHAM, NC 27707

UNITED STATES PATENT AND TRADEMARK OFFICE

COMMISSIONER FOR PATENTS
UNITED STATES PATENT AND TRADEMARK OFFICE
P.O. BOX 1450
ALEXANDRIA, VA 22313-1450
www.uspto.gov

CATERPILLAR c/o LIELL & MCNEIL ATTORNEYS PC
P.O. BOX 2417
511 SOUTH MADISON STREET
BLOOMINGTON IN 47402-2417

COPY MAILED

DEC 28 2006

OFFICE OF PETITIONS

ON PETITION

In re Application of
Ye Tian, et al.
Application No. 10/017,523
Filed: December 7, 2001
Attorney Docket No. 00-157

This is a decision on the petition under 37 CFR 1.137(b) to revive the above-identified application, filed August 1, 2006.

The application became abandoned for failure to pay the issue fee on or before November 25, 2005. The issue fee was paid on November 28, 2005. A Notice of Abandonment was mailed on June 14, 2006. On August 1, 2006, the present petition was filed.

The petition is found to comply with the requirements of 37 CFR 1.137(b). Accordingly, the petition is GRANTED.

The application is being referred to the Office of Publications for further processing.

Telephone inquires related to this decision should be directed to the undersigned at (571) 272-3204. Telephone inquiries related to processing at Publishing Division should be directed to (571) 272-4200.

Sherry D. Brinkley
Petitions Examiner
Office of Petitions

UNITED STATES PATENT AND TRADEMARK OFFICE

COMMISSIONER FOR PATENTS
UNITED STATES PATENT AND TRADEMARK OFFICE
WASHINGTON, D.C. 20231
www.uspto.gov

Paper No.

SAMUEL H. DWORETSKY
AT&t CORP.
P.O. BOX 4110
MIDDLETOWN, NJ 07748-4110

COPY MAILED

AUG 2 3 2002

OFFICE OF PETITIONS

In re Application of	:
Henry et al	:
Application No. 10/017,533	: DECISION DISMISSING
Filed: October 23, 2001	: PETITION FOR FILING DATE
Attorney Docket No. 2001-0099B	:

This is a decision on the petition filed on April 12, 2002, requesting that the above-identified application be accorded a filing date of October 29, 2001, rather than the presently accorded filing date of October 23, 2001. The petition is treated as a petition under 37 CFR 1.10(d).

The petition is **dismissed**.

Petitioner requests the earlier filing date on the basis that the application was purportedly deposited with the U.S. Postal Service (USPS), Express Mail Post Office to Addressee on October 29, 2001, pursuant to the requirements of 37 CFR 1.10. In support of the showing that the application is entitled to a filing date of October 29, 2001, petitioner has submitted a copy of an Express Mail Customer Receipt bearing a label number of EL924385509US, the same Express Mail number appearing on the application papers stated to have been mailed via 37 CFR 1.10 on October 29, 2001.

Paragraph (a) of 37 CFR 1.10 states that:

> Any correspondence received by the Patent and Trademark Office (Office) that was delivered by the "Express Mail Post Office to Addressee" service of the United States Postal Service (USPS) will be considered filed in the Office on the date of deposit with the USPS. The date of deposit with the USPS is shown by the "date-in" on the "Express Mail" mailing label or other official USPS notation. If the USPS deposit date cannot be determined, the

> correspondence will be accorded the Office receipt date as the filing date. See §1.6(a)(emphasis supplied).

Paragraph (d) of 37 CFR 1.10 states that:

> Any person filing correspondence under this section that was received by the Office and delivered by the "Express Mail Post Office to Addressee" service of the USPS, who can show that the "date-in" on the "Express Mail" mailing label or other official notation entered by the USPS was incorrectly entered or omitted by the USPS, may petition the Commissioner to accord the correspondence a filing date as of the date the correspondence is shown to have been deposited with the USPS, provided that:
>
> (1) The petition is filed promptly after the person becomes aware that the Office has accorded, or will accord, a filing date based upon an incorrect entry by the USPS;
>
> (2) The number of the "Express Mail" mailing label was placed on the paper(s) or fee(s) that constitute the correspondence prior to the original mailing by "Express Mail"; and
>
> (3) The petition includes a showing which establishes, to the satisfaction of the Commissioner, that the requested filing date was the date the correspondence was deposited in "Express Mail Post Office to Addressee" service prior to the last scheduled pickup for that day. Any showing pursuant to this paragraph <u>must be corroborated by evidence from the USPS or that came into being after deposit and within one business day of the deposit of the correspondence in the "Express Mail Post Office to Addressee" service of the USPS</u> (emphasis supplied).

A grantable petition under 37 CFR 1.10(d) must include "a showing which establishes, to the satisfaction of the Commissioner, that the requested filing date was the date the correspondence was deposited in 'Express Mail Post Office to Addressee' service prior to the last scheduled pickup for that day." In addition, the showing "must be corroborated by evidence from the USPS or that came into being after deposit and within one business day of the deposit of the correspondence in the 'Express Mail Post Office to Addressee' service of the USPS." Evidence from the USPS may be, for example, the Express Mail Corporate Account Mailing Statement or a statement by an appropriate official of the USPS that, according to a USPS record, the "date-in" on petitioners' Express Mail receipt is erroneous and accompanied by a copy of the relevant USPS record. Evidence that came into being

within one day after the deposit of the correspondence as Express Mail may be, for example, a log book which contains information such as the Express Mail label number; the application number, attorney docket number or other such file identification number; the place, date and time of deposit; the time of the last scheduled pickup for that date and place of deposit; the depositor's initials or signature; and the date and time of the log book entry.

The petition filed April 12, 2002 is not accompanied by the corroborating evidence required by 37 CFR 1.10(d). In this regard, while the copy of the Express Mail label submitted indicates that the "date-in" appears to be October 23, the only evidence submitted to show a deposit date of October 29, 2001 is the application transmittal letter which is not sufficient evidence. No Express Mail Corporate Account Mailing Statement or a statement by an appropriate official of the USPS that, according to a USPS record, the "date-in" on petitioner's Express Mail receipt is erroneous and accompanied by a copy of the relevant USPS record was. The rule specifically requires that the "date-in" must state the date of actual deposit. Placing the "Date-In" on the Express Mail label by the postal clerk establishes that the package was actually received by the Postal Service. That is the date that verifies that the package was actually mailed. Therefore, the application papers were given the filing date of their receipt in the PTO, i.e., October 23, 2001. Accordingly, the petition must be dismissed.

Any request for reconsideration should be filed within TWO MONTHS of the mail date of this decision in order to be considered timely. See 37 CFR 1.181(f).

Further correspondence with respect to this matter should be addressed as follows:

By mail: Assistant Commissioner for Patents
Box DAC
Washington, D.C. 20231

By FAX: (703) 308-6916
Attn: Office of Petitions

By HAND: Crystal Plaza Four, Suite 3C23
2201 South Clark Place
Arlington, Virginia 22202

Telephone inquiries specific to this decision on petition may be directed to Karen Creasy at (703) 305-8859.

This application is being forwarded to Technology Center AU 2673 for examination in due course.

Brian Hearn
Senior Petitions Examiner
Office of Petitions
Office of the Deputy Commissioner
for Patent Examination Policy

UNITED STATES PATENT AND TRADEMARK OFFICE

Commissioner for Patents
United States Patent and Trademark Office
P.O. Box 1450
Alexandria, VA 22313-1450
www.uspto.gov

ORRICK, HERRINGTON & SUTCLIFFE, LLP
4 PARK PLAZA
SUITE 1600
IRVINE CA 92614-2558

COPY MAILED

AUG 1 3 2004

OFFICE OF PETITIONS

In re Application of	:	
Ostrovsky et al.	:	
Application No. 10/017,534	:	ON PETITION
Filed: October 18, 2001	:	
Attorney Docket No. 701470.19	:	

This is a decision on the petition under 37 CFR 1.137(a), filed June 18, 2004, to revive the above-identified application on the basis of unavoidable delay.

The petition under 37 CFR 1.137(a) is **DISMISSED**.

Any request for reconsideration of this decision must be submitted within **TWO (2) MONTHS** from the mail date of this decision. Extensions of time under 37 CFR 1.136(a) are permitted. The reconsideration request should include a cover letter entitled, "Renewed Petition under 37 CFR 1.137(a)." In the alternative, applicant may wish to file petition under 37 CFR 1.137(b), to revive the application on the basis of unintentional delay.

The above-identified application became abandoned for failure to reply within the meaning of 37 CFR 1.113 to the final Office action mailed November 24, 2003, which set a three (3) month shortened statutory period for reply. By advisory action mailed June 2, 2004, applicant was advised that the amendment submitted in response to the final Office Action had been considered, but the proposed amendment was not entered because it did not place the application in better form for appeal by materially reducing or simplifying the issues for appeal.

Consideration of petition under 1.137(a) (Unavoidable Delay):

A grantable petition under 37 CFR 1.137(a) must be accompanied by: (1) the required reply, unless previously filed; (2) the petition fee as set forth in 37 CFR 1.17(l); (3) a showing to the satisfaction of the Commissioner that the entire delay in filing the required reply from the due date for the reply until the filing of a grantable petition pursuant to 37 CFR 1.137(a) was unavoidable; and (4) any terminal disclaimer (and fee as set forth in 37 CFR 1.20(d)) required pursuant to 37 CFR 1.137(c).

The instant petition does not satisfy requirement (3).

As to requirement (3), decisions on reviving abandoned applications on the basis of "unavoidable" delay have adopted the reasonably prudent person standard in determining if the delay was unavoidable: "The word 'unavoidable' ... is applicable to ordinary human affairs, and requires no more or greater care or diligence than is generally used and observed by prudent and careful men in relation to their most important business."[1]

Moreover, delay resulting from the lack of knowledge or improper application of the patent statutes, rules of practice or the MPEP, however, does not constitute "unavoidable" delay.[2]

37 CFR 1.135(b), the regulation relevant to the abandonment of this application, provides that (A) the admission of, or refusal to admit, any amendment after final rejection, or any related proceedings, will not operate to save the application from abandonment; and (B) the admission of, or refusal to admit, any amendment not responsive to the last action, or any related proceedings, will not operate to save the application from abandonment. It is the applicant's responsibility to take the necessary action in an application under a final Office action to provide a complete reply under 37 CFR 1.113. "A delay is not

---

[1] In re Mattulath, 38 App. D.C. 497, 514-15 (1912)(*quoting* Ex parte Pratt, 1887 Dec. Comm'r Pat. 31, 32-33 (1887)); see also Winkler v. Ladd, 221 F. Supp. 550, 552, 138 U.S.P.Q. 666, 167-68 (D.D.C. 1963), aff'd, 143 U.S.P.Q. 172 (D.C. Cir. 1963); Ex parte Henrich, 1913 Dec. Comm'r Pat. 139, 141 (1913).

[2] See Haines, 673 F. Supp. at 317, 5 U.S.P.Q. 2d at 1132; Vincent v. Mossinghoff, 230 U.S.P.Q. 621, 624 (D.D.C. 1985); Smith v. Diamond, 209 U.S.P.Q. 1091 (D.D.C. 1981); Potter v. Dann, 201 U.S.P.Q. 574 (D.D.C. 1978); Ex parte Murray, 1891 Dec. Comm'r Pat. 130, 131 (1891).

'unavoidable' when the applicant simply permits the maximum extendable statutory period for reply to a final Office action to expire while awaiting a notice of allowance or other action."[3]

Applicant may not rely upon late receipt of an advisory action to establish that the delay was unavoidable. 37 CFR 1.116 and 1.135(b) are manifest that proceedings concerning an amendment after final rejection will not operate to avoid abandonment of the application in the absence of a timely and proper appeal.

Applicant should have ensured that the amendment had been entered or should have filed either an Request for Continued Examination (RCE), continuing application, or Notice of Appeal. An applicant should not wait to take action until receipt of an advisory action which might not even be mailed until more than six months after the mailing of the final Office Action.

In the present petition, Joseph K. Liu, attorney of record, stated that his informal discussions with the Examiner led him to believe that the Amendment after final would have been accepted by the Examiner, when in fact the amendment was rejected.

Attorney Liu's attention is directed to 37 CFR 1.2, which reads, in part:

> All business with the Patent and Trademark Office should be transacted in writing.... The action of the Patent and Trademark Office will be based exclusively on the written record in the Office. **No attention will be paid to any alleged oral promise, stipulation, or understanding in relation to which there is disagreement or doubt.**

Furthermore, inasmuch as Attorney Liu may have relied upon the oral advice of a USPTO employee rather than ascertaining the applicable regulations and procedures, applicant must bear the risk that such advice is inaccurate.[4]

Conclusion:

While the showing of record is not sufficient to establish to the satisfaction of the Commissioner that the delay was unavoidable,

---

[3] MPEP 711.03(c)(III)(C)(2).

[4] See B and B Sales Co. v. Andrew Jergens Co., 7 USPQ2d 1906, 1907 (Comm'r Pat. 1988); In re Sivertz, 227 USPQ 255, 256 (Comm'r Pat. 1985).

applicant is not precluded from obtaining relief by filing a request for reconsideration pursuant to 37 CFR 1.137(b) on the basis of unintentional delay. A grantable petition under 37 CFR 1.137(b) must be accompanied by: (1) the reply required to the outstanding Office action or notice, unless previously filed; (2) the petition fee set forth in 37 CFR 1.17(m); (3) a statement that the entire delay in filing the required reply from the due date for the reply until the filing of a grantable petition pursuant to this paragraph was unintentional; and (4) any terminal disclaimer (and fee as set forth in 37 CFR 1.20(d)) required pursuant to 37 CFR 1.137(d).

The Office finance records indicate that applicants' Deposit Account, No. 15-0665, was mistakenly charge a $1,330.00 petition fee. The $1,330.00 petition fee will be credited to Deposit Account No. 15-0665. The correct petition fee amount of $110.00 will be charged to Deposit Account No. 15-0665.

Further correspondence with respect to this matter should be addressed as follows and to the Attention of Petitions Attorney Christina Tartera Donnell:

By mail: Mail Stop Petition
Commissioner for Patents
P.O. Box 1450
Alexandria, VA 22313-1450

By FAX: (703) 872-9306
Attn: Office of Petitions

By hand: U.S. Patent and Trademark Office
220 20th Street S.
Customer Window, Mail Stop Petition
Crystal Plaza Two, Lobby, Room 1B03
Arlington, VA 22202

Telephone inquiries concerning this decision should be directed to the undersigned at (703) 306-5589.

Christina Tartera Donnell

Christina Tartera Donnell
Petitions Attorney
Office of Petitions

UNITED STATES PATENT AND TRADEMARK OFFICE

Commissioner for Patents
United States Patent and Trademark Office
P.O. Box 1450
Alexandria, VA 22313-1450
www.uspto.gov

ORRICK, HERRINGTON & SUTCLIFFE, LLP
4 PARK PLAZA
SUITE 1600
IRVINE CA 92614-2558

COPY MAILED

SEP 20 2004

OFFICE OF PETITIONS

In re Application of :
Ostrovsky et al. :
Application No. 10/017,534 :
Filed: October 18, 2001 :
Attorney Docket No. 701470.19 :

ON PETITION

This is a decision on the petition under 37 CFR 1.137(b), filed September 2, 2004, to revive the above-identified application on the basis of unintentional delay.

The above-identified application became abandoned for failure to reply within the meaning of 37 CFR 1.113 to the final Office action mailed November 24, 2003, which set a three (3) month shortened statutory period for reply. By advisory action mailed June 2, 2004, applicant was advised that the amendment submitted in response to the final Office Action had been considered, but the proposed amendment was not entered because it did not place the application in better form for appeal by materially reducing or simplifying the issues for appeal. A Notice of Abandonment was mailed on August 24, 2004.

On June 18, 2004, petitioner submitted a petition under 37 CFR 1.137(a), which was dismissed by the decision of August 13, 2004. On September 2, 2004, petitioner submitted the present petition. Petitioner has met the requirements to revive the above-identified application pursuant to 37 CFR 1.137(b). Petitioner submitted the required reply in the form of an RCE and amendment, paid the petition fee, and made the proper statement of unintentional delay.

The application is being referred to Technology Center Art Unit 2877 for further processing.

Telephone inquiries concerning this decision should be directed to the undersigned at (703) 306-5589.

Christina Tartera Donnell

Christina Tartera Donnell
Petitions Attorney
Office of Petitions

UNITED STATES PATENT AND TRADEMARK OFFICE

COMMISSIONER FOR PATENTS
UNITED STATES PATENT AND TRADEMARK OFFICE
P.O. BOX 1450
ALEXANDRIA, VA 22313-1450
www.uspto.gov

Paper No.

J. F. Bryan & Associates, Inc.
P. O. Box 1987
Plano, TX 75086

COPY MAILED
JUN 2 2 2004
OFFICE OF PETITIONS

In re Application of	:	
Carlton Mann	:	
Application No. 10/017,545	:	ON PETITION
Filed: December 14, 2001	:	
Attorney Docket No. N/A	:	

This is a decision on the petition under 37 CFR 1.137(b), filed April 21, 2004, to revive the above-identified application.

The petition is **GRANTED**.

There is no indication that petitioner has submitted an Issue Fee Transmittal Form (PTOL-85b). Accordingly, if petitioner desires to have the information normally found thereon printed on the patent, the attached blank PTOL-85b should be completed and returned to the Publishing Division within **ONE MONTH** from the mail date of this decision.

Telephone inquiries concerning this decision should be directed to the undersigned at (703) 306-3475.

The application file is being forwarded to the Publishing Division.

Marianne E. Morgan
Petitions Examiner
Office of Petitions
Office of the Deputy Commissioner
for Patent Examination Policy

Attachment: Issue Fee Transmittal Form (PTOL-85b)

UNITED STATES PATENT AND TRADEMARK OFFICE

Commissioner for Patents
United States Patent and Trademark Office
P.O. Box 1450
Alexandria, VA 22313-1450
www.uspto.gov

JOHN F. BRYAN
8291 LAKESIDE DRIVE
ENGLEWOOD, FL 34224

COPY MAILED

FEB 02 2009

OFFICE OF PETITIONS

In re Patent No. 6,790,484 :
Issue Date: September 14, 2004 :
Application No. 10/017,545 : ON PETITION
Filed: December 14, 2001 :
Patentee(s): Carlton Mann :

This is a decision on the petition under 37 CFR 1.378(c), filed on November 12, 2008, to accept the delayed payment of a maintenance fee for the above-identified patent.

Since petitioner has demonstrated to the satisfaction of the Commissioner that the delay in timely paying the maintenance fee was unintentional, the petition under 37 CFR 1.378(c) is hereby **GRANTED**.

The maintenance fee is hereby accepted and the above-identified patent is reinstated as of the mail date of this decision.

This patented file is being forwarded to Files Repository.

Telephone inquiries should be directed to the undersigned at (571) 272-3226.

Andrea Smith
Petitions Examiner
Office of Petitions

UNITED STATES PATENT AND TRADEMARK OFFICE

COMMISSIONER FOR PATENTS
UNITED STATES PATENT AND TRADEMARK OFFICE
P.O. BOX 1450
ALEXANDRIA, VA 22313-1450
www.uspto.gov

Paper No. 7

COPY MAILED

MAY 1 7 2004

OFFICE OF PETITIONS

John H. Bouchard
Schlumberger Information Solutions
Suite 1700
5599 San Felipe
Houston, TX 77056-2722

In re Application of	:	
Dmitriy G. Repin, et al.	:	
Application No. 10/017,560	:	ON PETITION
Filed: December 14, 2001	:	
Attorney Docket No. 94.0041	:	

This is a decision on the petition under 37 CFR 1.137(b), filed May 5, 2004, to revive the above-identified application.

The petition is **GRANTED**.

Pursuant to 37 CFR 1.136, an extension of time must be filed prior to the expiration of the maximum period obtainable for reply to avoid abandonment. Since the $950 extension of time fee submitted with the present petition was subsequent to the six-month statutory period for reply, this fee is unnecessary and will be credited to petitioner's deposit account.

Telephone inquiries concerning this decision should be directed to the undersigned at (703) 306-3475.

The application file is being forwarded to Technology Center 2600.

Marianne E. Morgan
Petitions Examiner
Office of Petitions
Office of the Deputy Commissioner
for Patent Examination Policy

SPE RESPONSE FOR CERTIFICATE OF CORRECTION

Paper No.: _____

DATE : 7/16/09

TO SPE OF : ART UNIT 2192 DAM Tuan (spe)

SUBJECT : Request for Certificate of Correction for Appl. No.: 10/017572 Patent No.: 6978450

Please respond to this request for a certificate of correction within 7 days.

FOR IFW FILES:

Please review the requested changes/corrections as shown in the **COCIN** document(s) in the IFW application image. No new matter should be introduced, nor should the scope or meaning of the claims be changed.

Please complete the response (see below) and forward the completed response to scanning using document code **COCX**.

FOR PAPER FILES:

Please review the requested changes/corrections as shown in the attached certificate of correction. Please complete this form (see below) and forward it with the file to:

Certificates of Correction Branch (CofC)
South Tower - 9A22
Palm Location 7580

Certificates of Correction Branch

703-308-9390 ext. _____

Thank You For Your Assistance

The request for issuing the above-identified correction(s) is hereby:
Note your decision on the appropriate box.

- ☒ **Approved** — All changes apply.
- ☐ **Approved in Part** — Specify below which changes **do not** apply.
- ☐ **Denied** — State the reasons for denial below.

Comments: _____

TUAN DAM
SUPERVISORY PATENT EXAMINER
SPE

2192
Art Unit

UNITED STATES PATENT AND TRADEMARK OFFICE

COMMISSIONER FOR PATENTS
UNITED STATES PATENT AND TRADEMARK OFFICE
P.O. BOX 1450
ALEXANDRIA, VA 22313-1450
www.uspto.gov

SCOTT P. ZIMMERMAN PLLC
P. O. BOX 3822
CARY, NC 27519

COPY MAILED

JAN 27 2005

OFFICE OF PETITIONS

In re Application of
William R. Matz, et al.
Application No. 10/017,630
Filed: December 14, 2001
Attorney Docket No. 36968/265389

DECISION GRANTING PETITION
UNDER 37 CFR 1.137(b)

This is a decision on the petition, filed October 18, 2004, under 37 CFR 1.137(b) to revive the instant nonprovisional application for failure to timely notify the U.S. Patent and Trademark (USPTO) of the filing of an application in a foreign country, or under a multinational treaty that requires publication of applications eighteen months after filing. *See* 37 CFR 1.137(f).

The petition is **GRANTED**.

The instant nonprovisional application is the subject of an application filed in an eighteen month publication country on December 10, 2002. However, the USPTO was unintentionally not notified of this filing within 45 days subsequent to the filing of the subject application in an eighteen month publication country.

In view of the above, this application became abandoned pursuant to 35 U.S.C. § 122(b)(2)(B)(iii) and 37 CFR 1.213(c) for failure to timely notify the Office of the filing of an application in a foreign country or under a multilateral international agreement that requires publication of applications 18 months after filing.

A petition to revive an application abandoned pursuant to 35 U.S.C. 122(b)(2)(B)(iii) for failure to notify the USPTO of a foreign filing must be accompanied by:

(1) the required reply which is met by the notification of such filing in a foreign country or under a multinational treaty;
(2) the petition fee as set forth in 37 CFR 1.17(m); and
(3) a statement that the entire delay in filing the required reply from the due date of the reply until the filing of a grantable petition was unintentional.

The instant petition has been found to be in compliance with 37 CFR 1.137(b). Accordingly, the failure to timely notify the USPTO of a foreign or international filing within 45 days after the date of filing of such foreign or international application as provided by 35 U.S.C. § 122(b)(2)(B)(iii) and 37 CFR 1.213(c) is accepted as having been unintentionally delayed.

The previous Request and Certification under 35 U.S.C. § 122(b)(2)(B)(i) has been rescinded. A Notice Regarding Rescission of Nonpublication Request which sets forth the projected publication date of May 5, 2005 accompanies this decision on petition.

Any inquiries concerning this decision may be directed to Sherry D. Brinkley at (571) 272-3204. This application is being referred to Technology Center Art Unit 3629 to await a reply to the non-final Office action mailed December 8, 2004.

Sherry D. Brinkley
Petitions Examiner
Office of Petitions
Office of the Deputy Commissioner
for Patent Examination Policy

ATTACHMENT: Notice Regarding Rescission of Nonpublication Request

UNITED STATES PATENT AND TRADEMARK OFFICE

COMMISSIONER FOR PATENTS
UNITED STATES PATENT AND TRADEMARK OFFICE
P.O. BOX 1450
ALEXANDRIA, VA 22313-1450
www.uspto.gov

Paper No. 3

LERNER AND GREENBERG, P.A.
POST OFFICE BOX 2480
HOLLYWOOD, FL 33022-2480

COPY MAILED

OCT 2 9 2003

OFFICE OF PETITIONS

In re Application of
Chris Ricci
Application No. 10/017,636
Filed: **November 21, 2001**
Attorney Docket No. F-8079

DECISION ON PETITION

This is a decision on the "PETITION UNDER 37 C.F.R. 1.10(c)," filed October 16, 2003, requesting that the above-identified application be accorded a filing date of November 21, 2001, rather than the presently accorded filing date of December 18, 2001. This petition included persuasive evidence that it should be considered timely filed February 15, 2002.

Petitioner maintains that on November 21, 2001, the application was deposited as "Express Mail" in the U.S. Postal Service. In support thereof, applicant submits, *inter alia*, the following documents:

- a copy of the cover sheet accompanying the application papers on original filing; and
- a copy of the Internet Print-Out of the USPS to show that the papers mailed under Express Mail Label No. EL758653362US were accepted at the Post Office on November 21, 2001.

Paragraph (a) of 37 CFR 1.10 states that:

> Any correspondence received by the Patent and Trademark Office (Office) that was delivered by the "Express Mail Post Office to Addressee" service of the United States Postal Service (USPS) will be considered filed in the Office on the date of deposit with the USPS. <u>The date of deposit with the USPS is shown by the "date-in" on the "Express Mail" mailing label or other official USPS notation</u>. If the USPS deposit date cannot be determined, the correspondence will be accorded the Office receipt date as the filing date. See §1.6(a).
>
> (Emphasis supplied).

Paragraph (c) of 37 CFR 1.10 states that:

> Any person filing correspondence under this section that was received by the Office and delivered by the "Express Mail Post Office to Addressee" service of the USPS, who can show that there is a discrepancy between the filing date accorded by the Office to the correspondence and the date of deposit as shown by the "date-in" on the "Express Mail"

mailing label or other official USPS notation, may petition the Commissioner to accord the correspondence a filing date as of the "date-in" on the "Express Mail" mailing label or other official USPS notation, provided that:

(1) The petition is filed promptly after the person becomes aware that the Office has accorded, or will accord, a filing date other than the USPS deposit date;

(2) The number of the "Express Mail" mailing label was placed on the paper(s) or fee(s) that constitute the correspondence prior to the original mailing by "Express Mail;" and

(3) The petition includes a true copy of the "Express Mail" mailing label showing the "date-in," and of any other official notation by the USPS relied upon to show the date of deposit.

The instant petition was filed promptly within the meaning of § 1.10(c)(1). The cover sheet, which itemizes the papers being filed in this application, bears the "Express Mail" mailing label number "EL758653362US" thereon. Thus, petitioner has shown that the number of the Express Mail mailing label was placed on the correspondence prior to the original mailing by Express Mail. Petitioner's assertions are corroborated by the USPS Track and Confirm record. The "Shipment History" submitted notes ACCEPTANCE of the relevant Express Mail mailing at 5:32 pm on November 21, 2001[1]. In this instance, the requirement for a copy of the "Express Mail" mailing label is *sua sponte* waived[2].

In view thereof, the petition is GRANTED.

No petition fee is required.

The application is being forwarded to the Office of Initial Patent Examination (OIPE) for **correction of the filing date to November 21, 2001**.

Telephone inquires related to this decision may be directed to the undersigned at (703) 305-0309.

Nancy Johnson
Senior Petitions Attorney
Office of Petitions

---

[1] It is noted that during this period there was a disruption in Express Mail service to the United States Patent and Trademark Office (USPTO) at the Washington DC address; however, the USPS record supports a conclusion that the USPS nonetheless accepted the instant mailing. *Suspension of the "Express Mail" Service of United States Postal Service for mail addressed to ZIP Codes 202xx through 205xx*, 1254 OG 33 (January 1, 2002).

[2] By telephone inquiry on October 30, 2003, attorney of record Stemer confirmed that they had not received the "Express Mail" mailing label receipt from the USPS. It is further noted that the USPTO's USPS records do not contradict this assertion.

UNITED STATES PATENT AND TRADEMARK OFFICE

UNITED STATES DEPARTMENT OF COMMERCE
United States Patent and Trademark Office
Address: COMMISSIONER FOR PATENTS
P.O. Box 1450
Alexandria, Virginia 22313-1450
www.uspto.gov

APPL NO.	FILING OR 371 (c) DATE	ART UNIT	FIL FEE REC'D	ATTY.DOCKET NO	DRAWINGS	TOT CLMS	IND CLMS
10/017,636	11/21/2001	2152	505	F-8079	5	35	1

LERNER AND GREENBERG, P.A.
POST OFFICE BOX 2480
HOLLYWOOD, FL 33022-2480

CONFIRMATION NO. 6396

CORRECTED FILING RECEIPT

OC000000011288667

Date Mailed: 11/17/2003

Receipt is acknowledged of this regular Patent Application. It will be considered in its order and you will be notified as to the results of the examination. Be sure to provide the U.S. APPLICATION NUMBER, FILING DATE, NAME OF APPLICANT, and TITLE OF INVENTION when inquiring about this application. Fees transmitted by check or draft are subject to collection. Please verify the accuracy of the data presented on this receipt. **If an error is noted on this Filing Receipt, please write to the Office of Initial Patent Examination's Filing Receipt Corrections, facsimile number 703-746-9195. Please provide a copy of this Filing Receipt with the changes noted thereon. If you received a "Notice to File Missing Parts" for this application, please submit any corrections to this Filing Receipt with your reply to the Notice. When the USPTO processes the reply to the Notice, the USPTO will generate another Filing Receipt incorporating the requested corrections (if appropriate).**

Applicant(s)

Chris Ricci, Cookstown, CANADA;

Domestic Priority data as claimed by applicant

This appln claims benefit of 60/252,334 11/22/2000

Foreign Applications

If Required, Foreign Filing License Granted: 01/23/2002

Projected Publication Date: Not Applicable

Non-Publication Request: No

Early Publication Request: No

**** SMALL ENTITY ****

Title

Method for distributing and licensing digital media

Preliminary Class

209

LICENSE FOR FOREIGN FILING UNDER
Title 35, United States Code, Section 184
Title 37, Code of Federal Regulations, 5.11 & 5.15

GRANTED

The applicant has been granted a license under 35 U.S.C. 184, if the phrase "IF REQUIRED, FOREIGN FILING LICENSE GRANTED" followed by a date appears on this form. Such licenses are issued in all applications where the conditions for issuance of a license have been met, regardless of whether or not a license may be required as set forth in 37 CFR 5.15. The scope and limitations of this license are set forth in 37 CFR 5.15(a) unless an earlier license has been issued under 37 CFR 5.15(b). The license is subject to revocation upon written notification. The date indicated is the effective date of the license, unless an earlier license of similar scope has been granted under 37 CFR 5.13 or 5.14.

This license is to be retained by the licensee and may be used at any time on or after the effective date thereof unless it is revoked. This license is automatically transferred to any related applications(s) filed under 37 CFR 1.53(d). This license is not retroactive.

The grant of a license does not in any way lessen the responsibility of a licensee for the security of the subject matter as imposed by any Government contract or the provisions of existing laws relating to espionage and the national security or the export of technical data. Licensees should apprise themselves of current regulations especially with respect to certain countries, of other agencies, particularly the Office of Defense Trade Controls, Department of State (with respect to Arms, Munitions and Implements of War (22 CFR 121-128)); the Office of Export Administration, Department of Commerce (15 CFR 370.10 (j)); the Office of Foreign Assets Control, Department of Treasury (31 CFR Parts 500+) and the Department of Energy.

NOT GRANTED

No license under 35 U.S.C. 184 has been granted at this time, if the phrase "IF REQUIRED, FOREIGN FILING LICENSE GRANTED" DOES NOT appear on this form. Applicant may still petition for a license under 37 CFR 5.12, if a license is desired before the expiration of 6 months from the filing date of the application. If 6 months has lapsed from the filing date of this application and the licensee has not received any indication of a secrecy order under 35 U.S.C. 181, the licensee may foreign file the application pursuant to 37 CFR 5.15(b).

UNITED STATES PATENT AND TRADEMARK OFFICE

COMMISSIONER FOR PATENTS
UNITED STATES PATENT AND TRADEMARK OFFICE
P.O. BOX 1450
ALEXANDRIA, VA 22313-1450
WWW.USPTO.GOV

Paper No.

LERNER AND GREENBERG, P.A.
PATENT ATTORNEYS AND ATTORNEYS AT LAW
Post Office Box 2480
Hollywood, FL 33022-2480

COPY MAILED

APR 13 2004

OFFICE OF PETITIONS

In re Application of	:	
Jorg Schepers	:	
Application No. 10/017,639	:	DECISION GRANTING
Filed: November 21, 2001	:	PETITION
Attorney Docket No. 1999P1897	:	

This is a decision on the "PETITION UNDER 37 C.F.R. 1.10(c)," filed February 26, 2002, requesting that the above-identified application be accorded a filing date of November 21, 2001, rather than the presently accorded filing date of December 18, 2001. The petition was recently forwarded to the undersigned for consideration.

Petitioner maintains that on November 21, 2001, the application was deposited as "Express Mail" in the U.S. Postal Service. In support thereof, applicant submits the following documents:

- a photocopy of the cover letter transmitting the application papers under cover of Express Mail and noting thereon the Express Mail mailing label No. "EL758653362US";
- the official United States Postal Service (USPS) Track and Confirm record for the relevant Express Mail mailing;
- an itemized return postcard receipt, bearing the Express Mail mailing label number, but with a date stamp of receipt by the Office of December 18, 2001 and no notation of non-receipt of any item listed; and
- a declaration by Michael J. Burns of first-hand knowledge that the application was sent by "Express Mail" to the Office on November 21, 2001.

The instant petition was filed promptly within the meaning of § 1.10(c)(1). The cover letter to some extent itemizes[1] the papers received in the Office in the Express Mail mailing <u>and</u> more importantly, was in fact received with the application papers. Thus, petitioner has shown that the "Express Mail"

---

[1] Under the circumstances of this case, the evidence is persuasive that all of the application papers were received with the cover letter. However, it is suggested that either the Express Mail mailing label number be placed on each piece of correspondence (e.g. the specification, the drawings, etc.,) or that the accompanying transmittal, bearing the Express Mail mailing label number, specifically itemize the papers being filed (in the same manner as they are itemized on the return postcard).

papers. Thus, petitioner has shown that the "Express Mail" mailing label number "EL758653362US" was placed on the papers prior to the original mailing.

Petitioner's assertions are corroborated by the USPS Track and Confirm record. The "Delivery Status" submitted notes the relevant "Express Mail" item was accepted at 5:32 pm on November 21, 2001[2]. In this instance, the requirement for a copy of the "Express Mail" mailing label is *sua sponte* waived.

In view thereof, the petition is GRANTED.

It is noted that Office records reveal that the "Express Mail" mailing received December 18, 2001 contained 6 applications. **Petitioner is advised that it is not recommended that separate applications be submitted in the same mailing. See 37 CFR 1.4.** Under certain circumstances, doing so may preclude applicant from being able to later show that an application possibly misplaced by the Office was among the applications present in the "Express Mail" mailing. Further, doing so may result in multiple applications, or papers from different applications, being entered in a single application Image File Wrapper.

No petition fee is required.

The Office of Initial Patent Examination (OIPE) has been directed, pursuant to this decision, to **correct the filing date to November 21, 2001**.

Telephone inquires related to this decision may be directed to the undersigned at (703) 305-0309.

Nancy Johnson

Nancy Johnson
Senior Petitions Attorney
Office of Petitions

---

[2] It is noted that during this period there was a disruption in Express Mail service to the United States Patent and Trademark Office (USPTO) at the Washington DC address; however, the USPS record supports a conclusion that the USPS nonetheless accepted the instant mailing. *Suspension of the "Express Mail" Service of United States Postal Service for mail addressed to ZIP Codes 202xx through 205xx*, 1254 OG 33 (January 1, 2002).

UNITED STATES PATENT AND TRADEMARK OFFICE

Commissioner for Patents
United States Patent and Trademark Office
P.O. Box 1450
Alexandria, VA 22313-1450
www.uspto.gov

DAVIS & BUJOLD, P.L.L.C.
112 PLEASANT STREET
CONCORD, NH 03301

COPY MAILED

MAY 1 4 2007

OFFICE OF PETITIONS

In re Application of	:	
John J. Janas III et al	:	
Application No. 10/017,652	:	ON PETITION
Filed: December 12, 2001	:	
Attorney Docket No. CLCOCO P01AUS	:	

This is a decision on the petition, filed December 12, 2006, under 37 CFR 1.137(b) to revive the above-identified application.

The petition is **DISMISSED.**

Any request for reconsideration of this decision must be submitted within TWO (2) MONTHS from the mail date of this decision. Extensions of time under 37 CFR 1.136(a) are permitted. The reconsideration request should include a cover letter entitled "**Renewed Petition under 37 CFR 1.137(b)**." This is **not** final agency action within the meaning of 5 U.S.C. § 704.

A grantable petition under 37 CFR 1.137(b) must be accompanied by: (1) the required reply, unless previously filed; (2) the petition fee as set forth in 37 CFR 1.17(m); (3) a statement that the entire delay in filing the required reply from the due date for the reply until the filing of a grantable petition pursuant to 37 CFR 1.137(b) was unintentional; and (4) any terminal disclaimer (and fee as set forth in 37 CFR 1.20(d)) required by 37 CFR 1.137(c). Where there is a question as to whether either the abandonment or the delay in filing a petition under 37 CFR 1.137 was unintentional, the Commissioner may require additional information. See MPEP 711.03(c)(III)(C) and (D). The instant petition lack(s) item(s) (1).

The above-identified application became abandoned for failure to reply within the meaning of 37 CFR 1.113 in a timely manner to the final Office action mailed May 23, 2006, which set a shortened statutory period for reply of three (3) months. A reply under 37 CFR 1.113 is limited to an amendment that *prima facie* places the application in condition for allowance or a Notice of Appeal (and appeal fee required by 37 CFR 1.17(b)). No amendment *prima facie* placing the application in condition for allowance or Notice of Appeal (and appeal fee) was timely filed, and no extensions of time under the provisions of 37 CFR 1.136(a) were obtained. Accordingly, the above-identified application became abandoned on August 24, 2006.

It is not apparent whether the person signing the statement of unintentional delay was in a position to have firsthand or direct knowledge of the facts and circumstances of the delay at issue. Nevertheless, such statement is being treated as having been made as the result of a reasonable inquiry into the facts and circumstances of such delay. See 37 CFR 10.18(b) and Changes to Patent Practice and Procedure; Final Rule Notice, 62 Fed. Reg. 53131, 53178 (October 10, 1997), 1203 Off. Gaz. Pat. Office 63, 103 (October 21, 1997). In the event that such an inquiry has not been made, petitioner must make such an inquiry. If such inquiry results in the discovery that it is not correct that the entire delay in filing the required reply

from the due date for the reply until the filing of a grantable petition pursuant to 37 CFR 1.137(b) was unintentional, petitioner must notify the Office.

The person signing the instant petition also requests a change of correspondence address to the address given in the instant petition. There is, however, no indication that the person signing the instant petition was ever given a power of attorney or authorization of agent to prosecute the above-identified application. If the person signing the instant petition desires to receive future correspondence regarding this application, the appropriate power of attorney or authorization of agent must be submitted. While a courtesy copy of this decision is being mailed to the person signing the instant petition, all future correspondence will be directed to the address currently of record until such time as appropriate instructions are received to the contrary.

Further correspondence with respect to this matter should be addressed as follows:

By mail: Mail Stop PETITIONS
Commissioner for Patents
Post Office Box 1450
Alexandria, VA 22313-1450

By hand: Customer Service Window
Randolph Building
401 Dulany Street
Alexandria, VA 22314

By facsimile: (571) 273-8300
ATTN: Office of Petitions

Telephone inquiries concerning this decision should be directed to the undersigned at (571) 272-3210.

Irvin Dingle
Petitions Examiner
Office of Petitions

cc: Christopher N. George
McAndrews Held & Malloy, LTD
500 West Madison Street, Suite 3400
Chicago, IL 60661

Attachment: Advisory Action

Advisory Action Before the Filing of an Appeal Brief	Application No.	Applicant(s)	
	10/017,652	JANAS ET AL.	
	Examiner	Art Unit	
	Mike Tomaszewski	3626	

--The MAILING DATE of this communication appears on the cover sheet with the correspondence address --

THE REPLY FILED 12 December 2006 FAILS TO PLACE THIS APPLICATION IN CONDITION FOR ALLOWANCE.

1. ☒ The reply was filed after a final rejection, but prior to or on the same day as filing a Notice of Appeal. To avoid abandonment of this application, applicant must timely file one of the following replies: (1) an amendment, affidavit, or other evidence, which places the application in condition for allowance; (2) a Notice of Appeal (with appeal fee) in compliance with 37 CFR 41.31; or (3) a Request for Continued Examination (RCE) in compliance with 37 CFR 1.114. The reply must be filed within one of the following time periods:
   a) ☒ The period for reply expires 3 months from the mailing date of the final rejection.
   b) ☐ The period for reply expires on: (1) the mailing date of this Advisory Action, or (2) the date set forth in the final rejection, whichever is later. In no event, however, will the statutory period for reply expire later than SIX MONTHS from the mailing date of the final rejection.

   Examiner Note: If box 1 is checked, check either box (a) or (b). ONLY CHECK BOX (b) WHEN THE FIRST REPLY WAS FILED WITHIN TWO MONTHS OF THE FINAL REJECTION. See MPEP 706.07(f).

Extensions of time may be obtained under 37 CFR 1.136(a). The date on which the petition under 37 CFR 1.136(a) and the appropriate extension fee have been filed is the date for purposes of determining the period of extension and the corresponding amount of the fee. The appropriate extension fee under 37 CFR 1.17(a) is calculated from: (1) the expiration date of the shortened statutory period for reply originally set in the final Office action; or (2) as set forth in (b) above, if checked. Any reply received by the Office later than three months after the mailing date of the final rejection, even if timely filed, may reduce any earned patent term adjustment. See 37 CFR 1.704(b).

NOTICE OF APPEAL

2. ☐ The Notice of Appeal was filed on _____. A brief in compliance with 37 CFR 41.37 must be filed within two months of the date of filing the Notice of Appeal (37 CFR 41.37(a)), or any extension thereof (37 CFR 41.37(e)), to avoid dismissal of the appeal. Since a Notice of Appeal has been filed, any reply must be filed within the time period set forth in 37 CFR 41.37(a).

AMENDMENTS

3. ☒ The proposed amendment(s) filed after a final rejection, but prior to the date of filing a brief, will not be entered because
   (a) ☒ They raise new issues that would require further consideration and/or search (see NOTE below);
   (b) ☒ They raise the issue of new matter (see NOTE below);
   (c) ☒ They are not deemed to place the application in better form for appeal by materially reducing or simplifying the issues for appeal; and/or
   (d) ☐ They present additional claims without canceling a corresponding number of finally rejected claims.

   NOTE: *See Continuation Sheet*. (See 37 CFR 1.116 and 41.33(a)).
4. ☐ The amendments are not in compliance with 37 CFR 1.121. See attached Notice of Non-Compliant Amendment (PTOL-324).
5. ☐ Applicant's reply has overcome the following rejection(s): _____.
6. ☐ Newly proposed or amended claim(s) _____ would be allowable if submitted in a separate, timely filed amendment canceling the non-allowable claim(s).
7. ☐ For purposes of appeal, the proposed amendment(s): a) ☐ will not be entered, or b) ☐ will be entered and an explanation of how the new or amended claims would be rejected is provided below or appended.
   The status of the claim(s) is (or will be) as follows:
   Claim(s) allowed: _____.
   Claim(s) objected to: _____.
   Claim(s) rejected: _____.
   Claim(s) withdrawn from consideration: _____.

AFFIDAVIT OR OTHER EVIDENCE

8. ☐ The affidavit or other evidence filed after a final action, but before or on the date of filing a Notice of Appeal will not be entered because applicant failed to provide a showing of good and sufficient reasons why the affidavit or other evidence is necessary and was not earlier presented. See 37 CFR 1.116(e).
9. ☐ The affidavit or other evidence filed after the date of filing a Notice of Appeal, but prior to the date of filing a brief, will not be entered because the affidavit or other evidence failed to overcome all rejections under appeal and/or appellant fails to provide a showing a good and sufficient reasons why it is necessary and was not earlier presented. See 37 CFR 41.33(d)(1).
10. ☐ The affidavit or other evidence is entered. An explanation of the status of the claims after entry is below or attached.

REQUEST FOR RECONSIDERATION/OTHER

11. ☒ The request for reconsideration has been considered but does NOT place the application in condition for allowance because: See Continuation Sheet.
12. ☐ Note the attached Information Disclosure Statement(s). (PTO/SB/08) Paper No(s). _____
13. ☐ Other: _____.

Continuation of 3. NOTE: Applicant's amendments to the claims are a change in scope from the previous version of the claims and would require further search and consideration.

Continuation of 11. does NOT place the application in condition for allowance because: Applicant argues features that have not been entered as of the present communication. All other arguments rehash issues addressed in the Final Rejection mailed 5/23/06. As such, the rejections are hereby maintained.

UNITED STATES PATENT AND TRADEMARK OFFICE

Commissioner for Patents
United States Patent and Trademark Office
P.O. Box 1450
Alexandria, VA 22313-1450
www.uspto.gov

MCANDREWS HELD & MALLOY, LTD
500 WEST MADISON STREET
SUITE 3400
CHICAGO, IL 60661

COPY MAILED

OCT 26 2007

OFFICE OF PETITIONS

In re Application of :
John J. Janas III et al :
Application No. 10/017,652 : ON PETITION
Filed: December 12, 2001 :
Attorney Docket No. CLCOCO P01AUS :

This is a decision on the renewed petition under 37 CFR 1.137(b), filed July 2, 2007, to revive the above-identified application.

The petition is **GRANTED**.

The above-identified application is being revived solely for purposes of continuity with a Request For Continued Examination (RCE) filed on July 2, 2007.

Telephone inquiries concerning this decision should be directed to Irvin Dingle at (571) 272-3210.

This matter is being referred to Technology Center AU 3626 for further processing.

Irvin Dingle
Petitions Examiner
Office of Petitions

UNITED STATES PATENT AND TRADEMARK OFFICE

UNITED STATES DEPARTMENT OF COMMERCE
United States Patent and Trademark Office
Address: COMMISSIONER FOR PATENTS
P.O. Box 1450
Alexandria, Virginia 22313-1450
www.uspto.gov

HANLEY, FLIGHT & ZIMMERMAN, LLC
150 S. WACKER DRIVE
SUITE 2100
CHICAGO, IL 60606

Mail Date: 04/20/2010

Applicant	: John J. Janas III	: DECISION ON REQUEST FOR
Patent Number	: 7577573	: RECALCULATION of PATENT
Issue Date	: 08/18/2009	: TERM ADJUSTMENT IN VIEW
Appliction No	: 10/017,652	: OF WYETH AND NOTICE OF INTENT TO
Filed	: 12/12/2001	: ISSUE CERTIFICATE OF CORRECTION
		:

The Request for Recalculation is **GRANTED** to the extent indicated.

The patent term adjustment has been determined to be **1641** days. The USPTO will *sua sponte* issue a certificate of correction reflecting the amount of PTA days determined by the recalculation.

Prior to the issuance of the certificate of correction, the USPTO will afford patentee an opportunity to be heard and request reconsideration. Accordingly, patentee has **one month or thirty (30) days**, whichever is longer, to file a request for reconsideration of this patent term adjustment calculation. See 35 U.S.C. 154(b)(3)(B)(ii) and 37 CFR 1.322(a)(4). No extensions of time will be granted under 37 CFR 1.136.

Patentee should use document code PET.OP if electronically filing a request for reconsideration of this patent term adjustment calculation. The patentee must also include the information required by 37 CFR 1.705(b)(2) and the fee required by 37 CFR 1.18(e). If patentee does not file a timely request for reconsideration of this patent term adjustment calculation including the information required by 37 CFR 1.705(b)(2) and the fee required by 37 CFR 1.18(e), the USPTO will issue a certificate of correction reflecting the PTA determination noted above.

Patentee should be aware that in order to preserve the right to review in the United States District Court for the District of Columbia of the USPTO patent term adjustment determination, patentee must ensure that he or she also take the steps required under 35 U.S.C. 154(b)(4)(A) in a timely manner. Nothing in the request for recalculation should be construed as providing an alternative time frame for commencing a civil action under 35 U.S.C. 154(b)(4)(A).

Any questions concerning this decision should be directed to the Office of Patent Legal Administration at 571-272-7702.

UNITED STATES PATENT AND TRADEMARK OFFICE

COMMISSIONER FOR PATENTS
UNITED STATES PATENT AND TRADEMARK OFFICE
P.O. BOX 1450
ALEXANDRIA, VA 22313-1450
www.uspto.gov

RYAN KROMHOLZ & MANION, S.C.
Post Office Box 26618
MILWAUKEE, WI 53226

COPY MAILED
NOV 09 2006
OFFICE OF PETITIONS

In re Application of	:	
Scott West, et. al.	:	
Application No. 10/017,685	:	ON PETITION
Filed: December 14, 2001	:	
Attorney Docket No. 9222.17412-CIP 1	:	

This is a decision on the petition under 37 CFR 1.137(b), filed on August 25, 2006, to revive the above-identified application.

The application became abandoned for failure to timely respond to the Notice of Allowance and Fee(s) Due mailed on May 3, 2006.

37 CFR 1.137(b)(3) requires a statement that the entire delay in filing the required reply from the due date for the reply until the filing of a grantable petition pursuant to 37 CFR 1.137(b) was unintentional. Since the statement contained in the instant petition varies from the language required by 37 CFR 1.137(b)(3), the statement is being construed as the statement required by 37 CFR 1.137(b)(3) and petitioner must notify the Office if this is **not** a correct interpretation of the statement.

The petition satisfies the requirements of 37 CFR 1.137(b) in that petitioner has supplied (1) the reply in the form of $700 for payment of the issue fee and $300 for payment of the publication fee; (2) the petition fee of $750; and (3) an adequate statement of unintentional delay. Therefore, the petition is **GRANTED**.

This application file is being referred to the Office of Publications to be processed into a patent.

Telephone inquiries concerning this decision should be directed to the undersigned at (571) 272-3226.

Andrea Smith
Petitions Examiner
Office of Petitions

UNITED STATES PATENT AND TRADEMARK OFFICE

Commissioner for Patents
United States Patent and Trademark Office
P.O. Box 1450
Alexandria, VA 22313-1450
www.uspto.gov

THOMAS T. AQUILLA
BROWN & MICHAELS, PC
400 M&T BANK BUILDING
118 N. TIOGA ST.
ITHACA, NY 14850

COPY MAILED
JUN 1 8 2004
OFFICE OF PETITIONS

In re Application of :
Santos et al :
Application No. 10/017,697 : NOTICE
Filed: December 7, 2001 :
Attorney Docket No. DIZ-1

This is a notice regarding your request for acceptance of a fee deficiency submission under 37 CFR 1.28. On September 1, 1998, the Court of Appeals for the Federal Circuit held that 37 CFR 1.28(c) is the sole provision governing the time for correction of the erroneous payment of the issue fee as a small entity. **See DH Technology v. Synergystex International, Inc. 154 F.3d 1333, 47 USPQ2d 1865 (Fed. Cir. Sept. 1, 1998).**

The Office no longer investigates or rejects original or reissue applications under 37 CFR 1.56. **1098 Off. Gaz. Pat. Office 502 (January 3, 1989)**. Therefore, nothing in this Notice is intended to imply that an investigation was done.

Your fee deficiency submission under 37 CFR 1.28 is hereby **ACCEPTED**.

Inquiries related to this communication should be directed to the Office of Petitions Staff at (703) 305-9285.

This file is being forwarded to Technology Center AU 1615.

Irvin Dingle
Petitions Examiner
Office of Petitions
Office of the Deputy Commissioner
for Patent Examination Policy

UNITED STATES PATENT AND TRADEMARK OFFICE

COMMISSIONER FOR PATENTS
UNITED STATES PATENT AND TRADEMARK OFFICE
WASHINGTON, D.C. 20231
www.uspto.gov

Paper No. 3

Michael B. McNeil
Liell & McNeil Attorneys, PC
P.O. Box 2417
Bloomington, Indiana 47402

MAILED

MAR 0 7 2002

Technology Center 2100

In re Application of: Larry Scites	)	
Application No.: 10/017,699	)	
Filed: December 7, 2001	)	**DECISION ON REQUEST FOR**
For: SYSTEM AND METHOD FOR	)	**WITHDRAWAL AS ATTORNEY**
MOTIVATING SUBMISSION OF	)	
REAL ESTATE REFERRALS	)	

This is a decision on the Request To Withdraw from Representation filed February 13, 2002.

A grantable request to withdraw as attorney of record should indicate thereon the present mailing addresses of the attorney(s) who is/are withdrawing from the record and of the applicant. The request for withdrawal must be signed by every attorney seeking to withdraw or contain a clear indication that one attorney is signing on behalf of another/others. A request to withdraw will not be approved unless at least 30 (thirty) days would remain between the date of approval and the later of the expiration date of a time to file a response or the expiration date of the maximum time period which can be extended under 37 C.F.R. § 1. 136(a). The effective date of withdrawal being the date of decision and not the date of request. See M.P.E.P. § 402.06. 37 C.F.R. § 1.36 further requires that the applicant or patent owner be notified of the withdrawal of the attorney or agent.

There is no indication that the applicant has been informed of Mr. McNeil's request for withdrawal. Therefore, the request is **DENIED**.

All future communications from the United States Patent and Trademark Office (Office) will continue to be directed to the above-listed address until otherwise notified by applicant. Applicant is reminded of the obligation to promptly notify the Office of any change in correspondence address to ensure receipt of all communications from the Office.

Pinchus M. Laufer
Special Programs Examiner
Technology Center 2100
Computer Architecture, Software, and Electronic Commerce
(703) 306-4160

UNITED STATES PATENT AND TRADEMARK OFFICE

COMMISSIONER FOR PATENTS
UNITED STATES PATENT AND TRADEMARK OFFICE
P.O. BOX 1450
ALEXANDRIA, VA 22313-1450
www.uspto.gov

Paper No. 9

Charles J. Kulas
CARPENTER AND KULAS, LLP
1900 Embarcadero Road
Suite 109
Palo Alto, CA 94303

MAILED

FEB 23 2004

Technology Center 2100

In re Application of:	)	
Li-Wen Chen et al.	)	
Application No. 10/017,701	)	**DECISION ON REQUEST FOR**
Filed: December 14, 2001	)	**WITHDRAWAL AS ATTORNEY**
For: SPATIAL INTELLEGENCE SYSTEM AND METHOD	)	

This is a decision on the Request To Withdraw from Representation filed February 09, 2004.

A grantable request to withdraw as attorney of record should indicate thereon the present mailing addresses of the attorney(s) who is/are withdrawing from the record and of the applicant. The request for withdrawal must be signed by every attorney seeking to withdraw or contain a clear indication that one attorney is signing on behalf of another/others. A request to withdraw will not be approved unless at least 30 (thirty) days would remain between the date of approval and the later of the expiration date of a time to file a response or the expiration date of the maximum time period which can be extended under 37 C.F.R. § 1. 136(a). The effective date of withdrawal being the date of decision and not the date of request. See M.P.E.P. § 402.06. 37 C.F.R. § 1.36 further requires that the applicant or patent owner be notified of the withdrawal of the attorney or agent.

The request filed February 09 2004 meets all the requirements. Accordingly the request is **GRANTED**.

All future communications from the Office will be directed to the below-listed address until otherwise notified by applicant. This correspondence address is provided by the withdrawn attorney(s). Applicant is reminded of the obligation to promptly notify the Patent and Trademark Office (Office) of any change in correspondence address to ensure receipt of all communications from the Office.

For James R. Matthews

Vincent N. Trans
Special Programs Examiner
Technology Center 2100
Computer Architecture and Software
(703) 305-9750

cc: MetaEdge Corporation
5201 Great America Parkway
Suite 238
Santa Clara, CA 95054

SPE RESPONSE FOR CERTIFICATE OF CORRECTION

Paper No.: _____

DATE : 6/26/09

TO SPE OF : ART UNIT 2626

SUBJECT : Request for Certificate of Correction for Appl. No.: 10017702 Patent No.: 6934677 B2

Please respond to this request for a certificate of correction within 7 days.

FOR IFW FILES:

Please review the requested changes/corrections as shown in the **COCIN** document(s) in the IFW application image. No new matter should be introduced, nor should the scope or meaning of the claims be changed.

Please complete the response (see below) and forward the completed response to scanning using document code **COCX**.

FOR PAPER FILES:

Please review the requested changes/corrections as shown in the attached certificate of correction. Please complete this form (see below) and forward it with the file to:

Certificates of Correction Branch (C of C)
Randolph Square 9D40-D
Palm Location 7580

You can fax the Directors/SPE response to 571-270-9990

Lamonte Newsome
Certificates of Correction Branch
703-756-1574

Thank You For Your Assistance

The request for issuing the above-identified correction(s) is hereby:
Note your decision on the appropriate box.

- ☒ **Approved** — All changes apply.
- ☐ **Approved in Part** — Specify below which changes **do not** apply.
- ☐ **Denied** — State the reasons for denial below.

Comments: _____

SPE RESPONSE FOR CERTIFICATE OF CORRECTION

RICHEMOND DORVIL
SUPERVISORY PATENT EXAMINER

2626

SPE Art Unit

SPE RESPONSE FOR CERTIFICATE OF CORRECTION

Paper No.: _____

DATE : 8/20/08

TO SPE OF : ART UNIT 2648 LE, LANA

SUBJECT : Request for Certificate of Correction for Appl. No.: 10/017731 Patent No.: 6640088

Please respond to this request for a certificate of correction within 7 days.

FOR IFW FILES:

Please review the requested changes/corrections as shown in the **COCIN** document(s) in the IFW application image. No new matter should be introduced, nor should the scope or meaning of the claims be changed.

Please complete the response (see below) and forward the completed response to scanning using document code **COCX**.

FOR PAPER FILES:

Please review the requested changes/corrections as shown in the attached certificate of correction. Please complete this form (see below) and forward it with the file to:

Certificates of Correction Branch (CofC)
South Tower - 9A22
Palm Location 7580

_____
Certificates of Correction Branch

703-308-9390 ext. _____

Thank You For Your Assistance

The request for issuing the above-identified correction(s) is hereby:
Note your decision on the appropriate box.

- [x] **Approved** — **All** changes apply.
- [ ] **Approved in Part** — Specify below which changes **do not** apply.
- [ ] **Denied** — State the reasons for denial below.

Comments: _____

/Curtis Kuntz/
SPE

2614
Art Unit

UNITED STATES PATENT AND TRADEMARK OFFICE

Commissioner for Patents
United States Patent and Trademark Office
P.O. Box 1450
Alexandria, VA 22313-1450
www.uspto.gov

NIELDS & LEMACK
176 EAST MAIN ST
SUITE 7
WESTBORO MA 01581

COPY MAILED
DEC 15 2005
OFFICE OF PETITIONS

In re Application of	:
Van Barlow, et al.	: DECISION ON APPLICATION
Application No. 10/017,746	: FOR PATENT TERM ADJUSTMENT
Filed: December 7, 2001	:
Attorney Docket No. 510P004	:

This decision is in response to the "REQUEST FOR REDUCTION OF PATENT TERM ADJUSTMENT", filed October 20, 2005, notifying the Office of an error in Applicants' favor in the initial determination of patent term adjustment under 35 U.S.C. § 154(b).

The request for correction of the initial determination of patent term adjustment (PTA) is **GRANTED**.

The Office has updated the PAIR screen to reflect that the correct Patent Term Adjustment determination at the time of the mailing of the Notice of Allowance was **zero (0)** days. A copy of the updated PAIR screen, showing the correct determination, is enclosed.

On September 30, 2005, the Office mailed the Determination of Patent Term Adjustment under 35 U.S.C. 154(b) in the above-identified application. The Notice stated that the patent term adjustment to date is two (2) days.

The Office initially determined a patent term adjustment of two (2) days based on an adjustment for PTO delay of sixty-one (61) days pursuant to 35 U.S.C. 154(b)(1)(A)(i) and 37 C.F.R. § 1.703(a)(1), and sixty-four (64) days pursuant to 35 U.S.C. 154(b)(1)(A)(ii) and 37 C.F.R. § 1.703(a)(2), reduced by ninety-one (91), thirty (30), and two (2) days of applicant delay pursuant to 35 U.S.C. § 154(b)(2)(C)(ii) and 37 C.F.R. § 1.704(b).

Applicants state that the total PTA should be reduced because they filed an amended Appeal Brief on July 5, 2005. Applicants originally filed an Appeal Brief on March 28, 2005. However, the Office mailed a Notice of Non-Compliant Appeal Brief on June 6, 2005. Applicants filed a proper Appeal Brief on July 5, 2005. Accordingly, applicants should have been assessed additional delay of ninety-nine (99) days pursuant to 37 C.F.R. § 1.704(c)(7).

As the amended Appeal Brief was not filed until July 5, 2005, the Office's mailing of a Notice of Allowance on September 30, 2005 was timely mailed within four months. Accordingly, no PTO delay should have been assessed for the mailing of the Notice of Allowance.

In view thereof, the correct determination of PTA at the time of the mailing of the Notice of Allowance is **zero (0)** days (61 days of PTO delay, reduced by 222 (99+91+30+2) days of applicant delay).

No petition fee was required and none has been charged. The Office thanks Applicants for their good faith and candor in bringing this matter to the attention of the Office.

Telephone inquiries specific to this letter should be directed to Cliff Congo, Petitions Attorney, at (571)272-3207.

Kery A Fries

Kery Fries
Senior Legal Advisor
Office of Patent Legal Administration
Office of Deputy Commissioner
for Patent Examination Policy

Enclosure: Copy of adjusted PAIR calculation

UNITED STATES PATENT AND TRADEMARK OFFICE

COMMISSIONER FOR PATENTS
UNITED STATES PATENT AND TRADEMARK OFFICE
P.O. BOX 1450
ALEXANDRIA, VA 22313-1450
www.uspto.gov

Ashley I. Pezzner, Esquire
CONNOLLY BOVE LODGE & HUTZ LLP
1220 Market Street
P.O. Box 2207
Wilmington DE 19899

COPY MAILED

MAY 18 2005

OFFICE OF PETITIONS

In re Application	:	
Dorr, et al.	:	
Application No. 10/017,804	:	PATENT TERM ADJUSTMENT
Filed: December 14, 2001	:	
Dkt. No.: WI 00005	:	

This is a decision on the "REQUEST FOR PATENT TERM ADJUSTMENT," filed July 1, 2004. This request is being treated under 37 CFR 1.704(b) as an application for patent term adjustment. The required application fee of $200.00 has been charged to Deposit Account No. 03-2775 as authorized.

The application for patent term adjustment ("PTA") under 37 CFR 1.705(b) is **GRANTED**.

The Office will adjust the PAIR screen to reflect that the Patent Term Adjustment (PTA) determination at the time of mailing of the Notice of Allowance and Issue Fee Due reflects an adjustment of 280 days. A copy of the updated PAIR screen showing the correct determination is enclosed.

Applicants request reconsideration of the Patent Term Adjustment zero days as indicated on the Determination of Patent Term Adjustment mailed June 22, 2004.

A review of the application history reveals that an adjustment under 37 CFR 1.702(a)(1) of 41 days can be attributed to the Office. In accordance with 37 CFR 1.703(a)(1), the adjustment began February 16, 2003, the day after the date that is 14 months after the date on which the application was filed, and ended March 27, 2003, the date the non-final Office action was mailed.

The Office errantly entered December 29, 2003 as the date a reply to the non-final Office action was filed rather than June 27, 2003, the date of facsimile transmission of the response. The reply was resubmitted by facsimile on December 27, 2003,

however, applicants have established that the initial reply was timely received by the Office on June 27, 2003 as evidenced by the copy of the facsimile cover sheet indicating that the reply was successfully transmitted to the Office.

A further adjustment under 37 CFR 1.702(a)(2) of 239 days can be attributed to the Office. In accordance with 37 CFR 1.703(a)(2), the adjustment began October 27, 2003, the day after the date that is four months after the date a reply under § 1.111 was filed, and ended June 22, 2004, the date of mailing of Notice of Allowance.

In view thereof, at the time of Notice of Allowance the application is entitled to a patent term adjustment of 280 days.

This application is being forwarded to the Office of Patent Publication for processing into a patent.

Telephone inquiries specific to this matter should be directed to Petitions Attorney Alesia M. Brown at (571) 272-3205.

Karin Ferriter
Senior Legal Advisor
Office of Patent Legal Administration
Office of Deputy Commissioner
for Patent Examination Policy

Enclosure: Copy of Adjustment PAIR Calculation

UNITED STATES PATENT AND TRADEMARK OFFICE

COMMISSIONER FOR PATENTS
UNITED STATES PATENT AND TRADEMARK OFFICE
P.O. BOX 1450
ALEXANDRIA, VA 22313-1450
www.uspto.gov

Paper No. 10

STOUT, UXA, BUYAN & MULLINS LLP
4 VENTURE, SUITE 300
IRVINE CA 92618

COPY MAILED

SEP 3 0 2003

OFFICE OF PETITIONS

In re Application of
James N. Chang and Teresa H. Kuan
Application No. 10/017,817
Filed: December 14, 2001
Attorney Docket No. D-3011
Title: OPHTHALMIC COMPOSITIONS OF LUBRICATING EYES AND METHODS FOR MAKING AND USING SAME

DECISION ON PETITION
UNDER 37 C.F.R. §1.137(f)

This is a decision on the petition filed on August 25, 2003, pursuant to 37 C.F.R. §1.137(f), to revive the above-identified application.

A grantable petition pursuant to 37 CFR 1.137(f) must be accompanied by:

(1) Notification of the filing of an application in a foreign country or under a multinational treaty that requires 18 month publication[1];
(2) The petition fee as set forth in 37 C.F.R. § 1.17(m), and;
(3) A statement that the entire delay in filing the notice from the date that the notice was due under 35 U.S.C. §122(b)(2)(B)(iii) until the date the notice was filed was unintentional. The Commissioner may require additional information where there is a question whether the delay was unintentional.

Petitioner states that the instant nonprovisional application is the subject of an application filed in an international application on December 12, 2002. However, the United States Patent and Trademark Office was unintentionally not notified of this filing within 45 days subsequent to the filing of the subject application in a foreign country.

1 See PTO/SB/36 and paragraph on PTO/SB/64a for further information. Both may be downloaded at http://www.uspto.gov/web/forms/index.html.

On August 25, 2003, a Notice of Rescission of Nonpublication Request was filed with the Office, along with the instant petition.

In view of the above, this application became abandoned pursuant to 35 U.S.C. §1.22(b)(2)(B)(iii) and 37 C.F.R. §1.213(c) for failure to timely notify the Office of the filing of an application under a multilateral international agreement that requires publication of applications 18 months after filing.

The petition under 37 C.F.R. §1.137(f) is **GRANTED**.

Petitioner has submitted the notification of an international filing, paid the petition fee, and has made the proper statement of unintentional delay.

The instant petition has been found to be in compliance with 37 C.F.R. §1.137(f). Accordingly, the failure to timely notify the Office of a foreign or international filing within 45 days after the date of filing of such foreign or international application as provided by 35 U.S.C. §122(b)(2)(B)(iii) and 37 C.F.R. §1.213(c) is accepted as having been unintentionally delayed.

The previous Request and Certification under 35 U.S.C. §122(b)(2)(B)(i), filed with the original application papers, has been rescinded. A Corrected Filing Receipt which sets forth the projected publication date of January 8, 2004 accompanies this decision on petition.

It is noted that the address listed on the petition differs from the address of record. The application file does not indicate a change of correspondence address has been filed in this case, although the address given on the petition differs from the address of record. If petitioner desires to receive future correspondence regarding this application, the change of correspondence address must be submitted. A courtesy copy of this decision will be mailed to petitioner. However, all future correspondence will be directed to the address of record until such time as appropriate instructions are received to the contrary. Petitioner will not receive future correspondence related to maintenance fees unless a Change of Correspondence Address Form (PTO/SB/122) is submitted for the above-identified application. A blank Change of Correspondence Address Form (PTO/SB/122) may be found at http://www.uspto.gov/web/forms/sb0122.pdf.

It is not apparent whether the person signing the statement of unintentional delay was in a position to have firsthand or direct knowledge of the facts and circumstances of the delay at issue. Nevertheless, such statement is being treated as having been made as the result of a reasonable inquiry into the facts and circumstances of such delay2. In the event that such an inquiry has not been made, petitioner must make such an inquiry. If such inquiry results in the discovery that the delay in paying the maintenance fee under 37 CFR 1.378(c) was intentional, petitioner must notify the Office.

---

2 See 37 CFR 10.18(b); cf. Changes to Patent Practice and Procedure; Final Rule Notice, 62 Fed. Reg. 53131, 53178 (October 10, 1997), 1203 Off. Gaz. Pat. Office 63, 103 (October 21, 1997).

After this decision is mailed, the application will be forwarded to Technology Center 1600 for further processing.

Telephone inquiries concerning *this decision* should be directed to Attorney Paul Shanoski at (703) 305-0011.

Paul Shanoski
Attorney
Office of Petitions
United States Patent and Trademark Office

cc: Carlos A. Fisher
Legal Department, T2-7H
Allergan, Inc.
2525 Dupont Drive
Irvine, CA 92612

UNITED STATES PATENT AND TRADEMARK OFFICE

COMMISSIONER FOR PATENTS
UNITED STATES PATENT AND TRADEMARK OFFICE
P.O. BOX 1450
ALEXANDRIA, VA 22313-1450
WWW.USPTO.GOV

Paper No. 10

WOODARD EMHARDT NAUGHTON MORIARTY AND MCNETT
BANK ONE CENTER/TOWER
111 MONUMENT CIRCLE
SUITE 3700
INDIANAPOLIS IN 46204-5137

COPY MAILED

AUG 25 2003

OFFICE OF PETITIONS

In re Application of Brooks, et al. Application No. 10/017,827 Filed: December 7, 2001 Attorney Docket No. 1067-272	: : : : :	DECISION ON PETITION

This is a decision on the petition to revive under 37 CFR 1.137(b), pursuant to 37 CFR 1.137(f), filed August 11, 2003.

The petition is **GRANTED**.

Petitioner states that the instant application is the subject of a PCT international application filed on October 17, 2002. However, the US Patent and Trademark Office was unintentionally not notified of this filing within 45 days subsequent to the filing of the PCT application.

In view of the above, this application became abandoned pursuant to 35 USC 122(b)(2)(B)(iii) and 37 CFR 1.213(c) for failure to timely notify the Office of the filing of an application in a foreign country, or under a multilateral international agreement, that requires publication of applications 18 months after filing.

A petition under 37 CFR 1.137(f) must be accompanied by:

(1) the reply, which is met by the notification of such filing in a foreign country or under a multinational treaty;

(2) the petition fee as set forth in 37 CFR 1.17(m); and

(3) a statement that the entire delay in filing the required reply from the due date of the reply until the filing of a grantable petition was unintentional.

The instant petition has been found to be in compliance with 37 CFR 1.137(f). Accordingly, the failure to timely notify the Office of a foreign or international filing within 45 days after the date of filing of such foreign or international application as provided by 35 USC 122(b)(2)(B)(iii) and 37 CFR 1.213(c) is accepted as having been unintentionally delayed.

The previous Request and Certification under 35 USC 122(b)(2)(B)(i) has been rescinded. A Notice Regarding Rescission of Nonpublication Request and Notice of Foreign Filing, indicating a projected publication date of December 4, 2003 accompanies the decision.

The time period for reply set forth in the last Office communication (April 23, 2003) is hereby restarted to run from the mailing date of this decision.

The application is being returned to Technology Center 2800.

Telephone inquiries regarding this decision should be directed to the undersigned at (703) 305-0272.

Cliff Congo

Cliff Congo
Petitions Attorney
Office of Petitions

Enc: Notice Regarding Rescission of Nonpublication Request and Notice of Foreign Filing (2 pages)

UNITED STATES PATENT AND TRADEMARK OFFICE

COMMISSIONER FOR PATENTS
UNITED STATES PATENT AND TRADEMARK OFFICE
P.O. BOX 1450
ALEXANDRIA, VA 22313-1450
www.uspto.gov

Paper No. 4

MAIL

NOV 26 2003

DIRECTOR OFFICE
TECHNOLOGY CENTER 2100

Salim A. Hasan
LEYDIG, VOIT & MAYER, LTD.
Two Prudential Plaza, Suite 4900
180 North Stetson
Chicago, Illinois 60601-6780

In re Application of:	)	
Ortoleva	)	
Application No. 10/017,829	)	**DECISION ON REQUEST FOR**
Filed: December 8. 2001	)	**WITHDRAWAL AS ATTORNEY**
For: METHOD FOR MODELING MULTI-DIMENSIONAL DOMAINS USING INFORMATION THEORY TO RESOLVE GAPS IN DATA AND IN THEORIES	)	

This is a decision on the Request To Withdraw from Representation filed October 10, 2003.

A grantable request to withdraw as attorney of record should indicate thereon the present mailing addresses of the attorney(s) who is/are withdrawing from the record and of the applicant. The request for withdrawal must be signed by every attorney seeking to withdraw or contain a clear indication that one attorney is signing on behalf of another/others. A request to withdraw will not be approved unless at least 30 (thirty) days would remain between the date of approval and the later of the expiration date of a time to file a response or the expiration date of the maximum time period which can be extended under 37 C.F.R. § 1. 136(a). The effective date of withdrawal being the date of decision and not the date of request. See M.P.E.P. § 402.06. 37 C.F.R. § 1.36 further requires that the applicant or patent owner be notified of the withdrawal of the attorney or agent.

The request filed October 10, 2003 meets all the requirements. Accordingly the request is **GRANTED**.

All future communications from the Office will be directed to the below-listed address until otherwise notified by applicant. This correspondence address is provided by the withdrawn attorney(s). Applicant is reminded of the obligation to promptly notify the Patent and Trademark Office (Office) of any change in correspondence address to ensure receipt of all communications from the Office.

James R. Matthews

For Vincent N. Trans
Special Programs Examiner
Technology Center 2100
Computer Architecture and Software
(703) 305-9750

cc: Peter J. Ortoleva
INDIANA UNIVERSITY
DEPARTMENT OF CHEMISTRY, ROOM C-203
Bloomington, IL 47405

UNITED STATES PATENT AND TRADEMARK OFFICE

Commissioner for Patents
United States Patent and Trademark Office
P.O. Box 1450
Alexandria, VA 22313-1450
www.uspto.gov

CAPITOL PATENT & TRADEMARK LAW FIRM PLLC
PO BOX 1995
VIENNA VA 22183

COPY MAILED

FEB 06 2009

OFFICE OF PETITIONS

In re Application of Solheim, et al. Application No. 10/017,833 Filed: December 12, 2001 Attorney Docket No. 129250-002052/US/CPA	: : : : :	ON PETITION

This is a decision on the "PETITION TO WITHDRAW HOLDING OF ABANDONMENT OR, IN THE ALTERNATIVE TO REVIVE BASED ON UNAVOIDABILITY OR UNINTENTIONAL ABANDONMENT", filed January 18, 2009, which is being treated as a petition to withdraw the holding of abandonment under 37 CFR 1.181, or in the alternative to revive under 37 CFR 1.137(a) or under 37 CFR 1.137(b).

The petition under 37 CFR 1.181 is **DISMISSED**.

The petition under 37 CFR 1.137(a) is **DISMISSED**.

The petition under 37 CFR 1.137(b) is **GRANTED**.

The above-identified application became abandoned for failure to timely file a response to the non-final Office mailed May 14, 2008. This Office action set an extendable period for reply of three (3) months. No reply having been received, the application became abandoned on August 15, 2008. The Office mailed a Notice of Abandonment on January 27, 2009.

Petition Under 37 CFR 1.181:

Petitioner explains that while he did file an Amendment in the instant application on September 13, 2008, the Amendment was directed to another one of petitioner's applications. Petitioner did not realize this error until contacting the Electronic Business Center (EBC), at which time petitioner was informed that the Amendment was removed from the instant application, and properly inserted into the application for which it belonged. Petitioner contends that had the EBC forwarded the Amendment on to the Examiner for the instant application, the Examiner would have recognized the error and informed Applicant, thus giving Applicant time to timely file an Amendment in the instant application, avoiding abandonment.

Petitioner's argument has been considered, but is not persuasive. It has been Office policy that where the Office can determine the correct application file that the papers were actually intended for, the Office will transfer the papers to the correct application file. See MPEP 724.05. The Office properly did so in this instance.

Petition Under 37 CFR 1.137(a):

A grantable petition under 37 CFR 1.137(a) must be accompanied by: (1) the reply required to the outstanding Office action or notice, unless previously filed; (2) the petition fee set forth in 37 CFR 1.17(l); (3) a showing to the satisfaction of the Commissioner that the entire delay in filing the required reply from the due date for the reply until the filing of a grantable petition pursuant to this paragraph was unavoidable; and (4) Any terminal disclaimer (and fee as set forth in § 1.20(d)) required pursuant to paragraph (d) of this section. The instant petition lacks item (3).

Decisions on reviving abandoned applications on the basis of "unavoidable" delay have adopted the reasonably prudent person standard in determining if the delay was unavoidable: "The word 'unavoidable' ... is applicable to ordinary human affairs, and requires no more or greater care or diligence than is generally used and observed by prudent and careful men in relation to their most important business."[1]

---

[1] In re Mattulath, 38 App. D.C. 497, 514-15 (1912)(*quoting* Ex parte Pratt, 1887 Dec. Comm'r Pat. 31, 32-33 (1887)); see also Winkler v. Ladd, 221 F. Supp. 550, 552, 138 U.S.P.Q. 666, 167-68 (D.D.C. 1963), aff'd, 143 U.S.P.Q. 172 (D.C. Cir. 1963); Ex parte Henrich, 1913 Dec. Comm'r Pat. 139, 141 (1913).

Moreover, delay resulting from the lack of knowledge or improper application of the patent statutes, rules of practice or the Manual of Patent Examining Procedure, however, does not constitute "unavoidable" delay.[2]

Here, petitioner has not demonstrated that the cause of the delay at issue, filing an Amendment intended for one application into another an other application, was unavoidable. Rather, it is one that could have been avoided with the reasonable exercise of due care.

The $270 fee for the petition under 37 CFR 1.137(a) has been charged to Deposit Account No. 50-3777, as authorized. The petition fee required for a petition to revive is required for the filing, not merely the grant, of the petition.[3]

Petition Under 37 CFR 1.137(b):

With the instant petition, petitioner has paid the petition fee, made the proper statement of unintentional delay, and submitted the required reply in the form of an Amendment.

The petition fee of $810 has been charged to Deposit Account No. 50-3777, as authorized.

The application is being forwarded to Group Art Unit 2613 for consideration of the Amendment filed January 18, 2009.

Telephone inquiries related to this decision should be directed to the undersigned at (571)272-3207.

Cliff Congo
Petitions Attorney
Office of Petitions

---

[2] See Haines, 673 F. Supp. at 317, 5 U.S.P.Q. 2d at 1132; Vincent v. Mossinghoff, 230 U.S.P.Q. 621, 624 (D.D.C. 1985); Smith v. Diamond, 209 U.S.P.Q. 1091 (D.D.C. 1981); Potter v. Dann, 201 U.S.P.Q. 574 (D.D.C. 1978); Ex parte Murray, 1891 Dec. Comm'r Pat. 130, 131 (1891).

[3] See MPEP 711.03(c)(II)(B).

UNITED STATES PATENT AND TRADEMARK OFFICE

Commissioner for Patents
United States Patent and Trademark Office
Washington, D.C. 20231
www.uspto.gov
DIW 06-02

Paper No. 4

GINGER R. DREGER
KNOBBE MARTENS OLSON & BEAR
SUITE 1150
201 CALIFORNIA STREET
SAN FRANCISCO CA 94111

COPY MAILED

JUN 1 4 2002

OFFICE OF PETITIONS

In re Application of :
Baker et al. :
Application No. 10/017,867 : ON PETITION
Filed: 13 December, 2001 :
Attorney's Docket No. P2830P1C60 :

This is a decision on the petition filed on 30 April, 2002, requesting that the above-identified application, including Figure 246 described in the specification be accorded a filing date of 13 December, 2001.

On 13 December, 2001, the application was filed.

On 26 February, 2002, Initial Patent Examination Division mailed a Notice to Comply With Requirements for Patent Applications Containing Nucleotide Sequence and/or Amino Acid Sequence Disclosures stating, *inter alia*, that the application had been accorded a filing date of 13 December, 2001, but that Figure 246 described in the specification appeared to have been omitted.

In response, on 30 April, 2002 (certificate of mailing date 24 April, 2002), one (1) sheet of drawings containing Figure 246 and the present petition were submitted. Petitioners assert that Figure 246 was filed with the other application papers on 13 December, 2001, but was subsequently misplaced in the U.S. Patent and Trademark Office (Office). In support, a copy of petitioners' postcard receipt was supplied with the present petition. The postcard receipt shows an Office date stamp of 13 December, 2001, and references the above-identified application number. The postcard identifies the application by attorney docket number and first-named inventor's name, and acknowledges receipt, *inter alia*, of 249 sheets of drawings. Petitioners request that the application, including the drawings containing Figure 246, be accorded a filing date of 11 December, 2001.

A review of the record reveals that 248 sheets of drawings, containing Figures 1-110, 111A, 111B, 112-142, 143A, 143B, 144-178, 179A, 179B, 180-245 are located among the application papers deposited on 13 December, 2001. However, the evidence is

convincing that the application papers deposited on 13 December, 2001, included 249 sheets of drawings and that the sheet of drawings containing Figure 246 was subsequently misplaced in the Office. Therefore, the application, including the one (1) sheet of drawing containing Figure 246 as described in the specification, is entitled to a filing date of 13 December, 2001.

The "Notice" mailed on 26 February, 2002, is vacated to the extent that it stated that Figure 246 appeared to have been omitted from the application.

In view of the above, the petition is granted. The $130.00 petition fee paid on 30 April, 2002, will be refunded to counsel's deposit account, No. 11-1410.

The application will be processed, using the application papers filed on 13 December, 2001, and the copy of Figure 246 of the drawings supplied on 30 April, 2002.

The application is being returned to Initial Patent Examination Division for further processing with a filing date of 13 December, 2001, using the application papers filed on 13 December, 2001, and the one (1) sheet of drawing containing Figure 246, supplied on 30 April, 2002, and for an indication on the bib-data sheet that 249 sheets of drawings were present on filing.

Telephone inquires should be directed to Petitions Attorney Douglas I. Wood at 703 308-6918.

D Wood

Douglas I. Wood
Petitions Attorney
Office of Petitions
Office of the Deputy Commissioner
for Patent Examination Policy

Beverly M. Flanagan

Beverly M. Flanagan
Supervisory Petitions Attorney
Office of Petitions
Office of the Deputy Commissioner
for Patent Examination Policy

UNITED STATES PATENT AND TRADEMARK OFFICE

UNITED STATES DEPARTMENT OF COMMERCE
United States Patent and Trademark Office
Address: COMMISSIONER FOR PATENTS
P.O. Box 1450
Alexandria, Virginia 22313-1450
www.uspto.gov

KIMBERLY-CLARK WORLDWIDE, INC.
Tara Pohlkotte
2300 Winchester Rd.
NEENAH, WI 54956

Mail Date: 04/21/2010

Applicant	: Paul Joseph Datta	: DECISION ON REQUEST FOR
Patent Number	: 7578812	: RECALCULATION of PATENT
Issue Date	: 08/25/2009	: TERM ADJUSTMENT IN VIEW
Appliction No	: 10/017,894	: OF WYETH AND NOTICE OF INTENT TO
Filed	: 12/14/2001	: ISSUE CERTIFICATE OF CORRECTION
		:

The Request for Recalculation is **GRANTED** to the extent indicated.

The patent term adjustment has been determined to be **772** days. The USPTO will *sua sponte* issue a certificate of correction reflecting the amount of PTA days determined by the recalculation.

Prior to the issuance of the certificate of correction, the USPTO will afford patentee an opportunity to be heard and request reconsideration. Accordingly, patentee has **one month or thirty (30) days**, whichever is longer, to file a request for reconsideration of this patent term adjustment calculation. See 35 U.S.C. 154(b)(3)(B)(ii) and 37 CFR 1.322(a)(4). No extensions of time will be granted under 37 CFR 1.136.

Patentee should use document code PET.OP if electronically filing a request for reconsideration of this patent term adjustment calculation. The patentee must also include the information required by 37 CFR 1.705(b)(2) and the fee required by 37 CFR 1.18(e). If patentee does not file a timely request for reconsideration of this patent term adjustment calculation including the information required by 37 CFR 1.705(b)(2) and the fee required by 37 CFR 1.18(e), the USPTO will issue a certificate of correction reflecting the PTA determination noted above.

Patentee should be aware that in order to preserve the right to review in the United States District Court for the District of Columbia of the USPTO patent term adjustment determination, patentee must ensure that he or she also take the steps required under 35 U.S.C. 154(b)(4)(A) in a timely manner. Nothing in the request for recalculation should be construed as providing an alternative time frame for commencing a civil action under 35 U.S.C. 154(b)(4)(A).

Any questions concerning this decision should be directed to the Office of Patent Legal Administration at 571-272-7702.

SPE. Mc Dermott

SPE RESPONSE FOR CERTIFICATE OF CORRECTION 10/017,915

Paper No.: _____

DATE : 1/10/06

TO SPE OF : ART UNIT 3738

SUBJECT : Request for Certificate of Correction on Patent No.: 6761737

A response is requested with respect to the accompanying request for a certificate of correction.

Please complete this form and return with file, within 7 days to:
Palm location **7580, Certificates of Correction Branch – South Tower – 9A22**
If response is for an IFW, **return to employee (named below) via PUBSCofC Team in MADRAS.**
With respect to the change(s) requested, correcting Office and/or Applicant's errors, should the patent read as shown in the certificate of correction (COCIN)? No new matter should be introduced, nor should the scope or meaning of the claims be changed.

Lamonte M. Newsome

Thank You For Your Assistance

Certificates of Correction Branch
Tel. No. 703-305-8309

The request for issuing the above-identified correction(s) is hereby:
Note your decision on the appropriate box.

- [x] **Approved** — **All** changes apply.
- [ ] **Approved in Part** — Specify below which changes **do not** apply.
- [ ] **Denied** — State the reasons for denial below.

Comments:

_____

_____

_____

_____

_____

Cmr _____ 2/27/06

SPE **Art Unit**

SPE RESPONSE FOR CERTIFICATE OF CORRECTION

Paper No.: _____

DATE: October 19, 2005

TO SPE OF: ART UNIT 3738

SUBJECT: Request for Certificate of Correction on Patent No. 6,704,511

A response is requested with respect to the accompanying request for a certificate of correction.

Please complete this form and return with file, within 7 days to:
Palm location **7580, Certificates of Correction Branch – South Tower – 9A22**
If response is for an IFW, **return to employee (named below) via PUBSCofC Team in MADRAS.**

With respect to the change(s) requested, correcting Office and/or Applicant's errors, should the patent read as shown in the certificate of correction (COCIN)? No new matter should be introduced, nor should the scope or meaning of the claims be changed.

Magdalene Talley

Thank You For Your Assistance

Certificates of Correction Branch
Tel. No. 703-308-9309 ext. 116

The request for issuing the above-identified correction(s) is hereby:
Note your decision on the appropriate box.

- ☒ **Approved** — **All** changes apply.
- ☐ **Approved in Part** — Specify below which changes **do not** apply.
- ☐ **Denied** — State the reasons for denial below.

Comments:

Cheryl Miller 6/2/09

SPE

3738
Art Unit

PTOL-868 (REV. 7/03)

U.S. DEPARTMENT OF COMMERCE Patent and Trademark Office

UNITED STATES PATENT AND TRADEMARK OFFICE

COMMISSIONER FOR PATENTS
UNITED STATES PATENT AND TRADEMARK OFFICE
P.O. BOX 1450
ALEXANDRIA, VA 22313-1450
www.uspto.gov

Paper No. 6

Michael R. Cammarata
Birch, Stewart, Kolasch & Birch, LLP
8100 Gatehouse Road
Suite 500 East
Falls Church, VA 22042-1210

COPY MAILED

JUL 16 2003

OFFICE OF PETITIONS

In re Application of Jeff Gullicksen Application No. 10/017,919 Filed: October 29, 2001 Attorney Docket No. 4450-0187P	: : : : :	ON PETITION

This is a decision on the petition under 37 CFR 1.137(b), filed June 24, 2003, to revive the above-identified application.

The petition is GRANTED.

The above-identified application became abandoned for failure to submit an oath/declaration and substitute drawings in a timely manner in reply to the Notice To File Missing Parts of NonProvisional Application mailed January 24, 2002, which set a shortened statutory period for reply of two(2) months. Accordingly, the application became abandoned on March 25, 2002.

The file does not indicate a change of address has been submitted, although the address given on the petition slightly differs from the address of record. If appropriate, a change of address should be filed in accordance with MPEP 601.03.

Telephone inquiries concerning this decision should be directed to Cheryl Gibson-Baylor at (703)308-5111, or in her absence, Sherry D. Brinkley at (703)305-9220.

The application file is being forwarded to Office of Initial Patent Examination for further processing.

Cheryl Gibson-Baylor
Petitions Examiner
Office of Petitions
Office of the Deputy Commissioner
for Patent Examination Policy

Sherry D. Brinkley
Petitions Examiner

UNITED STATES PATENT AND TRADEMARK OFFICE

Commissioner for Patents
United States Patent and Trademark Office
P.O. Box 1450
Alexandria, VA 22313-1450
www.uspto.gov

JAN 13 2005

Mark A. Hollingsworth
Crawford Maunu, PLLC
1270 Northland Drive, Suite 390
Medota Heights, MN 55120

Paper No. 9

In re Application of Steven Girouard Serial No. : 10/017,941 Filed : December 12, 2001 For : System and Method for Treating an Adverse Cardiac Condition Using Combined Pacing and Drug Delivery	: DECISION ON PETITION TO WITHDRAW HOLDING OF ABANDONMENT

This is a decision on petitioner's request filed November 12, 2004, to review the holding of abandonment mailed October 19, 2004 for failure to respond to the Office action mailed August 26, 2003. There is no fee required for this petition.

In support of the request, petitioner has submitted a copy of a response, the response bearing a certificate of facsimile transmission dated November 25, 2003. Petitioner has also included a copy of a receipt of facsimile transmission confirmation confirming transmission of the papers in question on November 25, 2003, and a statement from the person who facsimiled the response attesting to the submission of the response.

In view of the above, the Notice of Abandonment mailed October 19, 2004 is in error and is hereby vacated. The holding of abandonment is withdrawn. Upon the mailing of this decision, the application will be forwarded to the Examiner via the Legal Instruments Examiner for entry and consideration of the response filed November 25, 2003.

Summary: Holding of Abandonment Withdrawn.

John E. Kittle, Director
Groups 3730 and 3760
Phone: (571) 272-2975

ak/12/13/04

UNITED STATES PATENT AND TRADEMARK OFFICE

COMMISSIONER FOR PATENTS
UNITED STATES PATENT AND TRADEMARK OFFICE
P.O. BOX 1450
ALEXANDRIA, VA 22313-1450
www.uspto.gov

COPY MAILED

JUN 1 6 2004

OFFICE OF PETITIONS

GEORGE O. SAILE & ASSOCIATES
28 DAVIS AVENUE
POUGHKEEPSIE, NY 12603

In re Application of	:	
Harry Chuang	:	DECISION GRANTING PETITION
Application No. 10/017,955	:	UNDER 37 CFR 1.137(b)
Filed: December 14, 2001	:	
Attorney Docket No. TS01-1372C	:	

This is a decision on the petition under 37 CFR 1.137(f), filed May 11, 2004, which is being treated as a petition under 37 CFR 1.137(b) to accept an unintentionally delayed notification of the filing in a foreign country of an application directed to the invention disclosed in the subject application.

The petition under 37 CFR 1.137(b) is **GRANTED**.

Petitioner indicates that the instant nonprovisional application became the subject of an application filed in a foreign country on June 14, 2002. However, the U.S. Patent and Trademark Office was unintentionally not notified of this filing within 45 days subsequent to the filing of the subject application in a foreign country.

In view of the above, this application became abandoned pursuant to 35 U.S.C. §122(b)(2)(B)(iii) and 37 CFR 1.213(c) for failure to timely notify the Office of the filing of an application in a foreign country or under a multilateral international agreement that requires publication of applications 18 months after filing.

A petition to revive an application abandoned pursuant to 35 U.S.C. § 122(b)(2)(B)(iii) for failure to notify the USPTO of a foreign filing must be accompanied by:

(1) the required reply which is met by the notification of such filing in a foreign country or under a multinational treaty;
(2) the petition fee as set forth in 37 CFR 1.17(m); and
(3) a statement that the entire delay in filing the required reply from the due date of the reply until the filing of a grantable petition was unintentional.

The instant petition has been found to be in compliance with 37 CFR 1.137(b). Accordingly, the failure to timely notify the USPTO of a foreign or international filing within 45 days after the date of filing of such foreign or international application as provided by 35 U.S.C. § 122(b)(2)(B)(iii) and 37 CFR 1.213(c) is accepted as having been unintentionally delayed.

The previous Request and Certification under 35 U.S.C. § 122(b)(2)(B)(i) has been rescinded. A Notice Regarding Rescission of Nonpublication Request which sets forth the projected publication date of September 23, 2004 accompanies this decision on petition.

Applicant is reminded that in view of this decision, the $300 publication fee must also be submitted upon payment of the issue fee.

Any inquiries concerning this decision may be directed to Sherry D. Brinkley at (703) 305-9220.

Sherry D. Brinkley
Petitions Examiner
Office of Petitions
Office of the Deputy Commissioner
for Patent Examination Policy

ATTACHMENT: Notice Regarding Rescission of Nonpublication Request

UNITED STATES PATENT AND TRADEMARK OFFICE

UNITED STATES DEPARTMENT OF COMMERCE
United States Patent and Trademark Office
Address: COMMISSIONER FOR PATENTS
P.O. Box 1450
Alexandria, Virginia 22313-1450
www.uspto.gov

Allan Ratner
Ratner & Prestia
P.O. Box 980
Valley Forge, PA 19482

Mail Date: 06/01/2010

Applicant	: Mitsuaki Oshima	: DECISION ON REQUEST FOR
Patent Number	: RE40969	: RECALCULATION of PATENT
Issue Date	: 11/10/2009	: TERM ADJUSTMENT IN VIEW
Application No	: 10/017,965	: OF WYETH
Filed	: 12/07/2001	:
		:

The Patentee's Request for Recalculation is **DISMISSED.**

This Request is deemed ineligible for consideration for one or more of the following reasons:

(A). The patent for which PTA recalculation is requested is either a design or reissue application or is a reexamination proceeding;

(B). The patent for which PTA recalculation is requested resulted from a utility or plant application filed under 35 USC 111(a) before May 29, 2000 and no CPA filed in the application on/after May 29, 2000;

(C). The patent for which PTA recalculation is requested resulted from an international application in which the international filing date was before May 29, 2000 and no CPA filed in the application on/after May 29, 2000;

(D). The patent for which PTA recalculation is requested issued on/after March 2, 2010;

(E). The Request for Recalculation was filed more than 180 days after the grant date of the patent and the request was not filed within two months of a dismissal of a request for reconsideration of the of the patent term under 37 CFR 1.705(d);

(F). The Request for Recalculation is not solely limited to USPTO pre-Wyeth interpretation of 35 U.S.C. 154(b)(2)(A);

or

(G). A civil action was filed pursuant to 35 U.S.C. 154(b)(4)(A)concerning the same patent at issue in this request.

Patentee may file a reply to this decision dismissing the Request for Recalculation. Patentee must file such reply within one month or thirty days, whichever is longer, of the mail date of the decision dismissing the Request for Recalculation. No fee is required if patentee is asserting in the reply that the dismissal for ineligibility is improper.

Patentee should use document code PET.OP if electronically filing a reply to this dismissal. If the USPTO finds that the request was improperly deemed ineligible, the USPTO will mail applicant a recalculation determination.

Patentee should be aware that in order to preserve the right to review in the United States District Court for the District of Columbia of the USPTO patent term adjustment determination, patentee must ensure that he or she also take the steps required under 35 U.S.C. 154(b)(4)(A). Nothing in the request for recalculation should be construed as providing an alternative time frame for commencing a civil action under 35 U.S.C. 154 (b)(4)(A).

Any questions concerning this decision should be directed to the Office of Patent Legal Administration at 571-272-7702.

UNITED STATES PATENT AND TRADEMARK OFFICE

UNITED STATES DEPARTMENT OF COMMERCE
United States Patent and Trademark Office
Address: COMMISSIONER FOR PATENTS
P.O. Box 1450
Alexandria, Virginia 22313-1450
www.uspto.gov

APPLICATION NO.	FILING DATE	FIRST NAMED INVENTOR	ATTORNEY DOCKET NO.	CONFIRMATION NO.
10/017,973	12/07/2001	Mitsuaki Oshima	MTS-520US5	9590

7590 03/04/2009

Allan Ratner
Ratner & Prestia
P.O. Box 980
Valley Forge, CA 19482

EXAMINER
CALLAHAN, PAUL E

ART UNIT	PAPER NUMBER
2137	

MAIL DATE	DELIVERY MODE
03/04/2009	PAPER

Please find below and/or attached an Office communication concerning this application or proceeding.

The time period for reply, if any, is set in the attached communication.

UNITED STATES PATENT AND TRADEMARK OFFICE

Commissioner for Patents
United States Patent and Trademark Office
P.O. Box 1450
Alexandria, VA 22313-1450
www.uspto.gov

MAILED

MAR 03 2009

TECHNOLOGY CENTER 2100

Allan Ratner
Ratner & Prestia
P.O. Box 980
Valley Forge CA 19482

In re Application of:
Oshima et al.
Application No. 10/017973
Filed: December 7 2001
For: Mark Forming Apparatus, Method of Forming Laser Mark on Optical Disk Reproducing Apparatus, Optical Disk and Method of Producing Optical Disk

DECISION ON PETITION UNDER 37 C.F.R. § 1.181

This is a decision on the petition filed January 07, 2009 under 37 CFR § 1.181 to have the examiner consider the Information Disclosure Statement (IDS) filed on April 24, 2008.

A review of the record reveals that the examiner upon seeing the Petition considered all of the references and returned an initialed signed copy of the 1449 on January 21, 2009 to petitioner.

As petitioner's relief has already occurred, the petition is **DISMISSED AS MOOT.**

Any inquiry concerning this decision should be directed to the undersigned whose telephone number is (571) 272-3612.

Tod Swann
Workgroup Quality Assurance Specialist
Technology Center 2400

UNITED STATES PATENT AND TRADEMARK OFFICE

Commissioner for Patents
United States Patent and Trademark Office
P.O. Box 1450
Alexandria, VA 22313-1450
www.uspto.gov

FASSE PATENT ATTORNEYS, P.A.
P.O. BOX 726
HAMPDEN, ME 04444-0726

In re Application of	:	
Masaaki Harasawa et al	:	
Application No. 10/017,983	:	ON PETITION
Filed: December 13, 2001	:	
Attorney Docket No. 4293		

RECEIVED
SEP -8 2004
TECHNOLOGY CENTER 2800

This is a decision on the petition, filed September 3, 2004, under 37 CFR 1.313(c)(2) to withdraw the above-identified application from issue after payment of the issue fee.

The petition is **GRANTED**.

The above-identified application is withdrawn from issue for consideration of a submission under 37 CFR 1.114 (request for continued examination). See 37 CFR 1.313(c)(2).

Petitioner is advised that the issue fee paid on July 22, 2004 in the above-identified application cannot be refunded. If, however, the above-identified application is again allowed, petitioner may request that it be applied towards the issue fee required by the new Notice of Allowance.[1]

Telephone inquiries should be directed to Irvin Dingle at (703) 306-5684.

This matter will be forwarded to Technology Center AU 2839 for processing of the request for continued examination under 37 CFR 1.114 and for consideration of the concurrently filed Information Disclosure Statement.

Irvin Dingle
Petitions Examiner
Office of Petitions
Office of the Deputy Commissioner
for Patent Examination Policy

---

[1] The request to apply the issue fee to the new Notice may be satisfied by completing and returning the new Issue Fee Transmittal Form PTOL-85(b), which includes the following language thereon: Commissioner for Patents is requested to apply the Issue Fee and Publication Fee (if any) or re-apply any previously paid issue fee to the application identified above. Petitioner is advised that, whether a fee is indicated as being due or not, the Issue Fee Transmittal Form **must** be completed and timely submitted to avoid abandonment. Note the language in bold text on the first page of the Notice of Allowance and Fee(s) Due (PTOL-85).

UNITED STATES PATENT AND TRADEMARK OFFICE

Commissioner for Patents
United States Patent and Trademark Office
P.O. Box 1450
Alexandria, VA 22313-1450
www.uspto.gov

FASSE PATENT ATTORNEYS, P.A.
P.O. BOX 726
HAMPDEN, ME 04444-0726

COPY MAILED

SEP 07 2004

OFFICE OF PETITIONS

ON PETITION

In re Application of :
Masaaki Harasawa et al :
Application No. 10/017,983 :
Filed: December 13, 2001 :
Attorney Docket No. 4293

This is a decision on the petition, filed September 3, 2004, under 37 CFR 1.313(c)(2) to withdraw the above-identified application from issue after payment of the issue fee.

The petition is **GRANTED**.

The above-identified application is withdrawn from issue for consideration of a submission under 37 CFR 1.114 (request for continued examination). See 37 CFR 1.313(c)(2).

Petitioner is advised that the issue fee paid on July 22, 2004 in the above-identified application cannot be refunded. If, however, the above-identified application is again allowed, petitioner may request that it be applied towards the issue fee required by the new Notice of Allowance.[1]

Telephone inquiries should be directed to Irvin Dingle at (703) 306-5684.

This matter will be forwarded to Technology Center AU 2839 for processing of the request for continued examination under 37 CFR 1.114 and for consideration of the concurrently filed Information Disclosure Statement.

Irvin Dingle
Petitions Examiner
Office of Petitions
Office of the Deputy Commissioner
for Patent Examination Policy

---

[1] The request to apply the issue fee to the new Notice may be satisfied by completing and returning the new Issue Fee Transmittal Form PTOL-85(b), which includes the following language thereon: Commissioner for Patents is requested to apply the Issue Fee and Publication Fee (if any) or re-apply any previously paid issue fee to the application identified above. Petitioner is advised that, whether a fee is indicated as being due or not, the Issue Fee Transmittal Form **must** be completed and timely submitted to avoid abandonment. Note the language in bold text on the first page of the Notice of Allowance and Fee(s) Due (PTOL-85).

UNITED STATES PATENT AND TRADEMARK OFFICE

Commissioner for Patents
United States Patent and Trademark Office
P.O. Box 1450
Alexandria, VA 22313-1450
www.uspto.gov

FASSE PATENT ATTORNEYS PA
P O BOX 726
HAMPDEN, ME 04444-0726

COPY MAILED
DEC 13 2005
OFFICE OF PETITIONS

In re Application of	:
Masaaki Harasawa et al	:
Application No. 10/017,983	: DECISION GRANTING PETITION
Filed: December 13, 2001	: UNDER 37 CFR 1.313(c)(2)
Attorney Docket No. 4293	:

This is a decision on the petition, filed December 7, 2005, under 37 CFR 1.313(c)(2) to withdraw the above-identified application from issue after payment of the issue fee.

The petition is **GRANTED**.

The above-identified application is withdrawn from issue for consideration of a submission under 37 CFR 1.114 (request for continued examination). See 37 CFR 1.313(c)(2).

Petitioner is advised that the issue fee paid on November 9, 2005 in the above-identified application cannot be refunded. If, however, the above-identified application is again allowed, petitioner may request that it be applied towards the issue fee required by the new Notice of Allowance.[1]

Telephone inquiries should be directed to the undersigned at (571) 272-3218.

This matter is being referred to Technology Center AU 2839 for processing of the request for continued examination under 37 CFR 1.114 and for consideration of the Information Disclosure Statement.

Frances Hicks
Petitions Examiner
Office of Petitions

---

[1] *The request to apply the issue fee to the new Notice may be satisfied by completing and returning the new Issue Fee Transmittal Form PTOL-85(b) (along with any balance due at the time of payment), which includes the following language thereon: "Commissioner for Patents is requested to apply the Issue Fee and Publication Fee (if any) or re-apply any previously paid issue fee to the application identified above." Petitioner is advised that, whether a fee is indicated as being due or not, the Issue Fee Transmittal Form* ***must*** *be completed and timely submitted to avoid abandonment. Note the language in bold text on the first page of the Notice of Allowance and Fee(s) Due (PTOL-85).*

UNITED STATES PATENT AND TRADEMARK OFFICE

Commissioner for Patents
United States Patent and Trademark Office
P.O. Box 1450
Alexandria, VA 22313-1450
www.uspto.gov

FASSE PATENT ATTORNEYS PC
P O BOX 726
HAMPDEN, ME 04444-0726

COPY MAILED
MAR 23 2006
OFFICE OF PETITIONS

In re Application of	:
Masaaki Harasawa et al	:
Application No. 10/017,983	: DECISION GRANTING PETITION
Filed: December 13, 2001	: UNDER 37 CFR 1.313(c)(2)
Attorney Docket No. 4293	:

This is a decision on the petition, filed March 21, 2006, under 37 CFR 1.313(c)(2) to withdraw the above-identified application from issue after payment of the issue fee.

The petition is **GRANTED**.

The above-identified application is withdrawn from issue for consideration of a submission under 37 CFR 1.114 (request for continued examination). See 37 CFR 1.313(c)(2).

Petitioner is advised that the issue fee paid on November 9, 2005 in the above-identified application cannot be refunded. If, however, the above-identified application is again allowed, petitioner may request that it be applied towards the issue fee required by the new Notice of Allowance.[1]

Telephone inquiries should be directed to the undersigned at (571) 272-3218.

This matter is being referred to Technology Center AU 2839 for processing of the request for continued examination under 37 CFR 1.114 and for consideration of the Information Disclosure Statement.

Frances Hicks
Petitions Examiner
Office of Petitions

C:\Documents and Settings\FHicks\My Documents\470\Mar9\017983.wpd

---

[1] *The request to apply the issue fee to the new Notice may be satisfied by completing and returning the new Part B – Fee(s) Transmittal Form (along with any balance due at the time of submission), which includes the following language thereon: "The Director of the USPTO is requested to apply the Issue Fee and Publication Fee (if any) or to re-apply any previously paid issue fee in the application identified above. Petitioner is advised that, whether a fee is indicated as being due or not, the Issue Fee Transmittal Form* ***must*** *be completed and timely submitted to avoid abandonment. Note the language in bold text on the first page of the Notice of Allowance and Fee(s) Due (PTOL-85).*

UNITED STATES PATENT AND TRADEMARK OFFICE

Commissioner for Patents
United States Patent and Trademark Office
P.O. Box 1450
Alexandria, VA 22313-1450
www.uspto.gov

Hahn Loeser & Parks LLP
Twin Oaks Estate
1225 West Market Street
Akron, OH 44313-7188

COPY MAILED

JUN 16 2005

OFFICE OF PETITIONS

In re Application of
Thong et al.
Application No. 10/017,998
Filed: December 13, 2001
Attorney Docket No. 7163-033

: DECISION GRANTING PETITION

This is a decision on the "APPLICATION FOR PATENT TERM ADJUSTMENT UNDER 37 CFR § 1.705(b)," filed August 19, 2004. Patentees request that the initial determination of patent term adjustment be corrected from three hundred and twenty six (326) to three hundred and fifty-one (351) days.

The application for patent term adjustment is **GRANTED**. The Office will adjust the PAIR calculation to reflect a determination of three hundred and fifty-one (351) days.

On June 23, 2004, the Office mailed the Determination of Patent Term Adjustment under 35 U.S.C. 154(b) in the above-identified application. The Notice stated that the patent term adjustment (PTA) to date is 326 days. On August 23, 2004, patentees timely[1] submitted an application for patent term adjustment (with required fee). Patentees dispute the reduction of 25 days attributed to applicants for failing to respond within three months to the Notice to File Missing Parts of Application mailed January 28, 2002. Patentees state that they timely responded to the Notice on March 14, 2002.

The record supports a conclusion that the patent issuing from the application is not subject to a terminal disclaimer.

A review of the application file reveals that applicants' response to the Notice to File Missing Parts of Application mailed January 28, 2002 is of record in the application with a date of receipt by the Office of March 14, 2002. Moreover, the response is complete and proper. As this response was filed within the three-month period under 37 CFR § 1.704(b), there was no applicant delay for the submission of the response to missing parts.

Accordingly, the correct determination of patent term adjustment at the time of the mailing of the Notice of Allowance is three hundred and fifty-one(351) days. The Office notes that the Office failed to initially act upon the application within fourteen months of the filing date, a three hundred and fifty-four day (354) delay. See 37 CFR 1.702(a)(2) Applicants failed to reply to the

[1] PALM records show that the Issue Fee payment was also received in the Office on September 21, 2004.

Office action dated February 2, 2004 until May 5, 2004, a three day delay. See 37 CFR 1.704(b).

The Office acknowledges submission of the $200.00 fee set forth in 37 CFR 1.18(e). No additional fees are required.

After the mailing of this Office action, the Office will forward such file to the Office of Patent Publications for a prompt issuance of the patent.

The Office apologizes for any delay in issuance of the patent and notes that application will receive additional PTA at the time of the issuance of the patent for failure to issue the application within four months of the payment of the issue fee and other requirements being satisfied. See 37 CFR 1.702(a)(4).

Telephone inquiries specific to this matter should be directed to Kery Fries, Senior Legal Advisor, Office of Patent Legal Administration at (571) 272-7757.

Kery A. Fries
for

Karin Ferriter
Senior Legal Advisor
Office of Patent Legal Administration
Office of Deputy Commissioner
for Patent Examination Policy

Enclosure: Copy of DRAFT C~~ertificate of Correction~~ PAIR determination

UNITED STATES PATENT AND TRADEMARK OFFICE

Commissioner for Patents
United States Patent and Trademark Office
P.O. Box 1450
Alexandria, VA 22313-1450
www.uspto.gov

OBLON, SPIVAK, MCCLELLAND, MAIER & NEUSTADT, P.C.
1940 DUKE STREET
ALEXANDRIA VA 22314

COPY MAILED

FEB 2 6 2007

OFFICE OF PETITIONS

ON PETITION

In re Application of :
Hijin Sato et al :
Application No. 10/018,005 :
Filed: March 25, 2002 :
Attorney Docket No. 217204US2PCT :

This is a decision on the petition, filed February 23, 2007, under 37 CFR 1.313(c)(2) to withdraw the above-identified application from issue after payment of the issue fee.

The petition is **GRANTED.**

The above-identified application is withdrawn from issue for consideration of a submission under 37 CFR 1.114 (request for continued examination). See 37 CFR 1.313(c)(2).

Petitioner is advised that the issue fee paid on November 17, 2006 in the above-identified application cannot be refunded. If, however, the above-identified application is again allowed, petitioner may request that it be applied towards the issue fee required by the new Notice of Allowance.[1]

Telephone inquiries should be directed to the undersigned at (571) 272-3208.

The examiner of Technology Center AU 2618 will consider the request for continued examination under 37 CFR 1.114.

Karen Creasy

Karen Creasy
Petitions Examiner
Office of Petitions

---

[1] The request to apply the issue fee to the new Notice may be satisfied by completing and returning the new Issue Fee Transmittal Form PTOL-85(b), which includes the following language thereon: "Commissioner for Patents is requested to apply the Issue Fee and Publication Fee (if any) or re-apply any previously paid issue fee to the application identified above." Petitioner is advised that, whether a fee is indicated as being due or not, the Issue Fee Transmittal Form **must** be completed and timely submitted to avoid abandonment. Note the language in bold text on the first page of the Notice of Allowance and Fee(s) Due (PTOL-85).

18 DEC 2002

UNITED STATES PATENT AND TRADEMARK OFFICE

COMMISSIONER FOR PATENTS
UNITED STATES PATENT AND TRADEMARK OFFICE
WASHINGTON, D.C. 20231
www.uspto.gov

Ranking, Hill, Porter & Clark LLP
700 Huntington Building
925 Euclid Avenue
Cleveland, OH 44115-1405

In re Application of KLEINHÄNI, Arno, et al. Application No.: 10/018,060 PCT No.: PCT/CH01/00207 Int. Filing Date: 02 April 2001 Priority Date: 11 April 2000 Attorney Docket No.: FRR-12782 For: SECURITY REVERSIBLE KEY AND LOCKING SYSTEM	DECISION ON PETITION UNDER 37 CFR 1.47(a)

This decision is in response to applicants' "Request for Reconsideration," filed 17 September 2002.

BACKGROUND

On 02 April 2001, applicants filed international application PCT/CH01/00207. A copy of the international application was transmitted to the United States Patent and Trademark Office from the International Bureau (IB) on 18 October 2001. Accordingly, the thirty-month period to comply with the requirements for entry into the national stage in the United States expired at midnight on 11 December 2001.

On 10 December 2001, applicants filed a transmittal letter for entry into the national stage in the United States which was accompanied by, *inter alia*, the requisite basic national fee.

On 26 February 2002, the United States Designated/Elected Office mailed a Notification of Missing Requirements (Form PCT/DO/EO/905) indicating that an oath or declaration in compliance with 37 CFR 1.497(a)-(b) was required.

On 02 July 2002, applicants filed a "Petition and Statement Under 37 CFR §1.47," accompanied by, *inter alia*, a declaration executed by one inventor.

On 14 August 2002, the Office mailed a Notification of Defective Reply indicating that inventor Roman Mathiuet's around the world trip was considered a vacation and was not an acceptable reason for a petition under 37 CFR 1.47(a).

On 17 September 2002, applicants submitted the instant renewed petition.

DISCUSSION

A petition under 37 CFR 1.47 must be accompanied by: (1) the fee under 37 CFR 1.17(h), (2) proof of pertinent facts, namely that the inventor refuses to sign or cannot be reached after diligent effort, (3) a statement of the last known address of the inventor, and (4) an oath or declaration by the 37 CFR 1.47(a) applicant on behalf of himself or herself and the nonsigning applicant.

Items (1), (2), (3) and (4) have been met. The fee has been paid. Applicants have demonstrated that the nonsigning inventor could not be reached after a diligent effort. Applicants list the last known address of Roman Mathiuet as Kiesweid 17, 8340 Hadlikon, Switzerland. The declaration of the inventors complies with 37 CFR 1.497(a)-(b).

CONCLUSION

For the above reasons, applicants' petition under 37 CFR 1.47(a) is **GRANTED**.

Any further correspondence with respect to this matter should be addressed to the Assistant Commissioner for Patents, Box PCT, Washington, D.C. 20231, with the contents of the letter marked to the attention of the Office of PCT Legal Administration.

As provided in 37 CFR 1.47(a), a notice of the filing of this application will be forwarded to the nonsigning inventor at his last known address of record.

A notice of the filing of the application under 37 CFR 1.47(a) will be published in the Official Gazette.

This application is being forwarded to the National Stage Processing Branch of the Office of PCT Operations to continue national stage processing of the application, including accordation of a 35 U.S.C. date of **02 July 2002**.

Richard Cole
PCT Legal Examiner
PCT Legal Administration

Erin M. Pender
Attorney Advisor
PCT Legal Administration

Telephone: (703) 305-0455
Facsimile: (703) 308-6459

31 MAY 2002

UNITED STATES PATENT AND TRADEMARK OFFICE

Commissioner for Patents
United States Patent and Trademark Office
Washington, D.C. 20231
www.uspto.gov

HARNESS, DICKEY & PIERCE, P.L.C.
Customer No. 30596
P.O. Box 10395
Chicago, IL 60610

In re Application of
JØRGENSEN, Martin Bondo *et al*
U.S. Application No.: 10/018,065
PCT No.: PCT/DK00/00298
Int. Filing Date: 31 May 2000
Priority Date: 10 June 1999
Attorney Docket No.: 45900-000713
For: ENCODER

DECISION ON PETITION FOR REVIVAL UNDER 37 CFR 1.137(b)

Applicants' "Petition to Revive an Unintentionally Abandoned Application Under 37 CFR §1.137(b)" filed on 01 April 2002 in the above-captioned application is hereby **GRANTED** as follows:

The appropriate basic national fee and the petition fee have been paid. Applicants state that "[t]he entire delay in filing the required reply from the due date for the reply until the filing of a grantable petition under 37 CFR 1.137(b) was unintentional" as required by 37 CFR 1.137(b)(3). A terminal disclaimer is not required. Accordingly, all requirements under 37 CFR 1.137(b) have been satisfied.

A signed oath or declaration was not included with any of the papers submitted.

Accordingly, this application is being forwarded to the United States Designated/Elected Office for further processing including mailing a Notification of Missing Requirements indicating that the declaration in compliance with 37 CFR 1.497(a) and (b) and a surcharge fee pursuant to 37 CFR 1.492(e) is required.

James Thomson
Attorney Advisor
PCT Legal Office

Tel.: (703) 308-6457

10/018192 JC13 Rec'd PCT/PTO 01 NOV 2001

59138-B-PCT

UNITED STATES DEPARTMENT OF COMMERCE
Patent and Trademark Office

Patent Cooperation Treaty —
Legal Office

Address: Assistant Commissioner for Patents
Box PCT
Washington, D.C. 20231

RECEIVED
COOPER & DUNHAM
AUG 25 2000
DOCKET CLERK

received

18 AUG 2000

John P. White
COOPER & DUNHAM LLP
1185 Avenue of the Americas
New York, NY 10036

In re Application of SYNAPTIC PHARMACEUTICAL CORPORATION PCT No.: PCT/US00/12065 Int. Filing Date: 03 MAY 2000 Priority Date: 03 MAY 1999 For: DNA ENCODING SNORF36a AND SNORF36b RECEPTORS	DECISION ON PETITION UNDER 37 CFR 1.181

The "Communication In Response To June 7, 2000 Invitation To Correct Defects In The International Application" filed 26 JUN 2000 is being treated as a petition under 37 C.F.R. 1.181 for acceptance of drawing sheet 14/35 (figure 7A) filed with the response as being filed on 03 MAY 2000. The petition is **DISMISSED** as follows:

No petition fee is necessary.

MPEP at section 503 states, in part:

> *"A postcard receipt which itemizes and properly identifies the papers which are being filed serves as prima facie evidence of receipt in the PTO of all the items listed thereon on the date stamped thereon by the PTO."*

The evidence submitted by the applicants, which includes a return receipt postcard itemizing all the papers filed on 26 JUN 2000 in connection with international application serial number PCT/US00/12065, is sufficient to establish that drawing sheet no. 14/35 (fig. 7A) was received in the Office on 03 MAY 2000. The postcard indicated that 35 sheets of drawings were included.

8/18/2000 JPW
Request for Reconsid.: 9/18/2000 59138-B-PCT
Ext. Response: 10/18/2000
: 11/18/2000
: 12/18/2000
Ext. Deadline: 1/18/2001
: 2/18/2001 SMB

However, applicant has not filed a copy of sheet no. 14/35 as originally filed. Accordingly, applicant's petition cannot be granted.

CONCLUSION

The petition under 37 CFR 1.181 is **DISMISSED** without prejudice.

If reconsideration on the merits of this petition is desired, a proper response must be filed within ONE (1) MONTH from the mail date of this decision. Any reconsideration request should include a cover letter entitled "Renewed Petition Under 37 CFR 1.181." No petition fee is required. Extensions of time may be obtained under 37 CFR 1.136 (a).

1/2000 SMB

Any further correspondence with respect to this matter should be addressed to the Assistant Commissioner for Patents, Box PCT, Washington, D.C. 20231, with the contents of the letter marked to the attention of the PCT Legal Office.

Leonard Smith
PCT Legal Examiner
PCT Legal Office

Jeremy Fleming
Paralegal Specialist
PCT Legal Office

JSF/LS:jf

(703)308-6154

Applicant Synaptic Pharmaceutical Corporation

Client Synaptic (1795) File No. 59138-B-PCT Atty. JPW/PC

Date May 3, 2000 PCT/US 00/12065

Kindly acknowledge receipt of the accompanying

RECEIVED
COOPER & DUNHAM
MAY 22 2000
DOCKET CLERK

New PCT International Application Under the Patent Cooperation Treaty on behalf of Synaptic Pharmaceutical Corporation entitled DNA ENCODING SNORF36a AND SNORF36b RECEPTORS, claiming priority of Beth E. Borowsky, et al., U.S. Serial No. 09/518,914, filed March 3, 2000, a continuation-in-part of U.S. Serial No. 09/303,598, filed May 3, 1999, designating all countries available including the United States (continuation-in-part), including description (113pp), claims (27pp), abstract (1p), drawings (35pp), PCT Request Form (6pp), Transmittal letter, Attachment A to Transmittal Letter, Fee Calculation Sheet, diskette containing computer-readable form of sequence listing, Statement of Compliance Under 37 C.F.R. §1.821(f), Sequence Listing (20pp) attached to Statement of Compliance as **Exhibit A**, a check for $3,766.00, and Express Mail Certificate of Mailing dated May 3, 2000 bearing Express Mail Label [illegible]

527 Rec'd PCT/PTO 03 MAY 2000

By placing your receipt date stamp hereon and returning to us.

DUE DATE: May 3, 2000

20 SEP 2002
UNITED STATES PATENT AND TRADEMARK OFFICE

COMMISSIONER FOR PATENTS
UNITED STATES PATENT AND TRADEMARK OFFICE
WASHINGTON, D.C. 20231
www.uspto.gov

FRISHAUF, HOLTZ, GOODMAN, LANGER & CHICK
767 Third Avenue, 25th Floor
New York, NY 10017-2023

In re Application of	:	
HATTORI, et al.	:	DECISION ON PETITION
Application No.: 10/018,210	:	
PCT No.: PCT/JP01/02240	:	
Int. Filing Date: 21 March 2001	:	
Priority Date: 31 March 2000	:	
Attorney Docket No.: 01685/LH	:	
For: AUTOCORRELATION BIT ERROR DETECTION DEVICE AND METHOD FOR OPTICAL SIGNAL BY OPTICAL BRANCHING METHOD	:	

This decision is issued in response to applicants' "Request For Corrected Form PCT/DO/EO/903 And Corrected Filing Receipt" filed 03 May 2002, treated herein as a petition under 37 CFR 1.10(c). No petition fee is required.

BACKGROUND

On 31 March 2001, applicants filed international application PCT/JP01/02240 which claimed a priority date of 31 March 2000 and which designated the United States. On 11 October 2001, a copy of the international application was transmitted to the United States Patent And Trademark Office ("USPTO") by the International Bureau ("IB").

A Demand was not filed with the International Preliminary Examining Authority electing the United States prior to the expiration of 19 months from the priority date. As a result, the deadline for submission of the basic national fee was twenty months from the priority date, i.e., 30 November 2001.

Applicants filed a transmittal letter for entry into the national stage in the United States accompanied by, among other materials, payment of the basic national fee, an executed declaration, and a translation of the international application into English.

On 12 April 2002, the DO/EO/US mailed a Notification Of Acceptance indicating 30 November 2001 as the 35 U.S.C. 371 date. Also on 12 April 2002, a filing receipt was issued which identified 30 November 2001 as the filing date.

On 18 June 2002, applicants filed the "Request For Corrected Form PCT/DO/EO/903 And Corrected Filing Receipt" considered herein. In the petition, applicants assert that the materials filed to initiate the present national stage application were filed on 30 October 2001

and that this date, rather than 30 November 2001, is the proper 35 U.S.C. 371 date for the present application.

DISCUSSION

A review of the application file reveals that the transmittal letter filed with the present application materials contains an "Express Mail" mail certification identifying the "Express Mail" label number as EV044466140US. This specifically identified "Express Mail" envelope is present in the application file and bears a USPS stamp dated 30 October 2001. The "date in" is not legible on the envelope in the file, but applicants have attached to the present request a copy of this "Express Mail" label on which the "date in" is "10/30/01." Based on the USPS date stamp on the "Express Mail" envelope and the "date in" on the copy of the "Express Mail" label submitted by applicants, it is concluded that the "Express Mail" envelope containing the national stage materials filed herein was deposited with the USPS on 30 October 2001. This submission included all the requirements for entering the national stage under 35 U.S.C. 371. Pursuant to 37 CFR 1.10(c), the proper 35 U.S.C. 371 date for this application is therefore 30 October 2001.

CONCLUSION

Applicants' petition under 37 CFR 1.10(c) is **GRANTED**.

The Notification Of Acceptance mailed 12 April 2002 is **VACATED**.

This application is being returned to the National Stage Processing Branch of the Office of PCT Operations for further processing, including the mailing of a corrected Notification Of Acceptance identifying 30 October 2001 as the 35 U.S.C. 371 date and for processing applicant's request for a corrected filing receipt.

Boris Milef
PCT Legal Examiner
PCT Legal Office

Richard M. Ross
PCT Petitions Attorney
PCT Legal Office
Telephone: (703) 308-6155
Facsimile: (703) 308-6459

RMR/BM:rmr

#5

UNITED STATES PATENT AND TRADEMARK OFFICE

COMMISSIONER FOR PATENTS
UNITED STATES PATENT AND TRADEMARK OFFICE
P.O. BOX 1450
ALEXANDRIA, VA 22313-1450
www.uspto.gov

01 JUL 2003

James Earl Lowe, Jr.
15417 W. National Ave., #300
New Berlin, WI 53151

In re Application of	:	
BABIJ, Alex	:	
U.S. Application No.: 10/018,234	:	DECISION ON PETITION
PCT No.: PCT/AU00/00676	:	UNDER 37 CFR 1.182
International Filing Date: 16 June 2000	:	
Priority Date: 17 June 1999	:	
Attorney's Docket No.: 15475	:	
For: A SCREW GUIDE	:	

This decision is issued in response to the petition filed by applicant on 18 June 2003, which requests that applicant's 14 December 2001 submission be treated as a national stage submission for the above captioned international application and not for the international application indicated on the originally filed Transmittal Letter. Applicant has paid the required petition fee.

BACKGROUND

On 16 June 2000, applicant filed international application PCT/AU00/00676 which claimed a priority date of 17 June 1999 and which designated the United States. On 28 December 2000, a copy of the international application was communicated to the United States Patent and Trademark Office ("USPTO") by the International Bureau ("IB").

A Demand was filed with the International Preliminary Examining Authority electing the United States prior to the expiration of 19 months from the priority date. As a result, the deadline for submission of the basic national fee was extended to expire thirty months from the priority date, i.e., 17 December 2001.

On 14 December 2001, applicant filed a Transmittal Letter for entry into the national stage in the United States accompanied by, among other materials, a copy of international application PCT/AU00/00676, payment of the basic national fee, and an executed declaration in compliance with 37 CFR 1.497. However, the Transmittal Letter submitted by applicants misidentified the international application number as PCT/AU99/00676; the Transmittal Letter otherwise properly identifies the title, international filing date, and priority date for the intended application, PCT/AU00/00676.

Based on the erroneous international application number listed on the Transmittal Letter, the present national stage application file was created for PCT/AU99/000676, rather than for PCT/AU00/00676.

On 05 March 2002, the DO/EO/US mailed a Notification Of Acceptance indicating that the 35 U.S.C. 371 date for the present application was 14 December 2001. However, the Notification Of Acceptance identified the application as a national stage of PCT/AU99/00676, as did the filing receipt mailed on the same date (the filing receipt also listed the priority information and title of PCT/AU99/00676).

On 01 April 2002, applicant filed a "Request For Corrected Filing Receipt" seeking a correction of the international application, priority information, and title listed on the filing receipt.

On 18 June 2003, applicants filed the petition considered herein. This petition was accompanied by a corrected Transmittal Letter identifying the international application as PCT/AU00/00676.

DISCUSSION

In the present petition, applicants confirms that the listing of PCT/AU99/00676 in the original Transmittal Letter was an error, and that it was applicant's intent for the Transmittal Letter to refer to PCT/AU00/00676, the application attached to the original Transmittal Letter and the application referenced in the executed declaration filed with the original application materials. The petition included payment of the $130 petition fee and a corrected copy of the Transmittal Letter. Accordingly, applicant's petition to correct the Transmittal Letter is granted. This national stage file (10/018,234) is the national stage of PCT/AU00/00676.

Based on the above, the Notification Of Acceptance mailed 05 March 2002 and the corresponding filing receipt (both of which reference PCT/AU99/00676 rather than PCT/AU00/00676), are appropriately vacated.

CONCLUSION

The petition under 37 CFR 1.182 **GRANTED**.

This application is the national stage of PCT/AU00/00676 with a 35 U.S.C. 371 date of 14 December 2001.

The Notification Of Acceptance mailed 05 March 2002 and the corresponding filing receipt are hereby **VACATED** based on their incorrect reference to PCT/AU99/00676.

This application is being returned to the National Stage Processing Branch of the Office Of PCT Operations for processing in accord with this decision, including the issuing of a corrected Notification Of Acceptance and corrected filing receipt which refer to the proper international application number (PCT/AU00/00676), priority information and title.

Richard M. Ross
PCT Petitions Attorney
PCT Legal Office
Telephone: (703) 308-6155
Facsimile: (703) 308-6459

MAR 1 5 2002

UNITED STATES PATENT AND TRADEMARK OFFICE

Commissioner for Patents
United States Patent and Trademark Office
Washington, D.C. 20231
www.uspto.gov

STRIKER, STRIKER & STENBY
103 EAST NECK ROAD
HUNTINGTON, NEW YORK 11743

In re Application of	:
Emilio TALMON	:
Application No.: 10/018,241	: DECISION ON
PCT No.: PCT/IT99/00358	:
Int. Filing Date: 16 December 1999	:
Priority Date: 12 February 1999	: PETITION UNDER
Attorney's Docket No.: 1926	:
For: LID APPLIED BY PRESSURE TO	:
CANS CONTAINING DRINKS	: 37 CFR 1.137(b)

This is in response to "Petition to Revive" filed on 07 December 2001.

BACKGROUND

On 16 December 1999, this international application was filed, which claimed an earliest priority date of 12 February 1999.

A Demand was filed on 15 June 2000 for the above international application. Accordingly, the deadline for paying the basic national fee in the United States under 35 U.S.C. 371 and 37 CFR 1.495 was 12 August 2001. This international application became abandoned with respect to the United States at midnight on 12 August 2001 for failure pay the basic national fee.

On 07 December 2001, applicant filed in the United States Patent and Trademark Office (PTO) the instant petition, and a transmittal letter for entry into the national stage in the U.S. under 35 U.S.C. 371, which was accompanied by, *inter alia*, the U.S. basic national fee, and an executed declaration.

DISCUSSION

A grantable petition to revive an abandoned application under 37 CFR 1.137(b) must be accompanied by (1) the required reply, unless previously filed; (2) the petition fee as set forth in § 1.17(m); and (3) a statement that the entire delay in filing the required reply from the due date for the reply until the filing of a grantable petition pursuant to this paragraph was unintentional; and (4) any terminal disclaimer (and fee as set forth in § 1.20 (d)) required pursuant to paragraph (c) of this section.

Petitioner has provided: (1) the proper reply by submitting the basic national filing fee, (2) the petition fee set forth in §1.17(m).and (3) the proper statement under 137(b)(3). In this application, no terminal disclaimer is required.

Accordingly, the petition is deemed to satisfy requirements (1), (2), (3), and (4) under 37 CFR 1.137(b).

DECISION

The petition under 37 CFR 1.137(b) is **GRANTED**.

The required fees of $65.00 (the surcharge under 1.492(e) for late filing of the declaration), and $130.00 (the surcharge under 1.492(f) for an English translation after thirty months) has been charged to Deposit Account No. 19-4675 as authorized in the petition.

This application is being returned to the United States Designated/Elected Office (DO/EO/US) for continued processing. The 35 USC 371 date of this application is **07 December 2001**.

Rafael Bacares
PCT Legal Examiner
PCT Legal Office
Tel: (703) 308-6312
Fax: (703) 308-6459

06 SEP 2002

UNITED STATES PATENT AND TRADEMARK OFFICE

COMMISSIONER FOR PATENTS
UNITED STATES PATENT AND TRADEMARK OFFICE
WASHINGTON, D.C. 20231
www.uspto.gov

Benoit Castel
Young & Thompson
745 23rd Street
Arlington, VA 22202

In re Application of	:	
ASLIN et al.	:	
Application No.:10/018,242	:	
PCT No.: PCT/SE00/01278	:	DECISION ON
Int. Filing Date: 16 June 2000	:	PAPERS UNDER 37 CFR 1.42
Priority Date: 18 June 1999	:	
Attorney Docket No.: P4811US00/EB/MR	:	
For: INHALER		

This is a response to the declaration filed 01 July 2002 which is being treated as a request under 37 CFR 1.42. No petition fee is required.

BACKGROUND

On 16 June 2000, applicants filed international application PCT/SE00/01278, which claimed a priority date of 18 June 1999. A copy of the international application was communicated to the United States Patent and Trademark Office from the International Bureau on 28 December 2000. A proper Demand was filed with the International Preliminary Examining Authority electing the United States. The election was made prior to the expiration of nineteen months from the priority date. As a result, the deadline for payment of the basic national fee was extended to expire on 11 December 2001.

On 18 December 2001, applicants filed a transmittal letter for entry into the national stage in the United States accompanied, inter alia, by: the basic national fee and a preliminary amendment.

On 01 March 2002, the United States Designated/Elected Office (DO/EO/US) mailed a Notification of Missing Requirements (Form PCT/DO/EO/905) requiring an oath or declaration in compliance with 37 CFR 1.497 and the surcharge fee required under 37 CFR 1.492(e). The notification set a two-month time limit in which to respond.

On 01 July 2002, applicants filed an declaration executed by: Goran Aslin; Oscar Alexandersson; Lennart Burnnberg; and Nikolaus Blomqvist, on behalf of deceased inventor, Nils Blomqvist.

DISCUSSION

37 CFR 1.42 *When the Inventor is Dead*, states, in part:

> In case of the death of the inventor, the legal representative (executor, administrator, etc.) of the deceased inventor may make the necessary oath or declaration, and apply for and obtain the patent.

The declaration filed 01 July 2002 is executed by: Goran Aslin; Oscar Alexandersson; Lennart Burnnberg; and Nikolaus Blomqvist, as the "legal representative" of the deceased inventor, Nils Blomqvist. The declaration submitted appears to have been executed by the proper party under 37 CFR 1.42, however, the declaration does not satisfy the requirements under 37 CFR 1.497(b)(2).

37 CFR 1.497(b)(2) states the following:

> (2) If the person making the oath or declaration or any supplemental oath or declaration is not the inventor (§§ 1.42, 1.43, or § 1.47) the oath or declaration shall state the relationship of the person to the inventor, and, upon information and belief, the facts which the inventor would have been required to state. If the person signing is the legal representative of a deceased inventor, the oath or declaration shall also state that the person is a legal representative and the citizenship, residence, and mailing address of the legal representative.

Pursuant to revised 37 CFR 1.497(b)(2), in addition to the citizenship and former residence and post office address of the deceased inventor referenced under 37 CFR 1.497(b)(2), the declaration must also provide residence, citizenship, and post office address for the legal representative. The declaration filed on 01 July 2002 provides this information with respect to the deceased inventor, but <u>not</u> the legal representative. Accordingly, the declaration is not in compliance with 37 CFR 1.497(b)(2).

CONCLUSION

For the above reasons, the request for status under 37 CFR 1.42 is **<u>REFUSED</u>**.

Applicants are required to provide an oath/declaration in compliance with 37 CFR 1.497(a)-(b) within **TWO (2) MONTHS** from the mail date of this Decision. Failure to respond will result in the abandonment of the application. Any reconsideration request should include a cover letter entitled "Renewed Submission Under 37 CFR 1.42."

Any further correspondence with respect to this matter should include a cover letter entitled "Renewed Submission Under 37 CFR 1.42" and be addressed to the Assistant Commissioner for Patents, Box PCT, Washington, D.C. 20231, with the contents of the letter marked to the attention of the PCT Legal Office.

Richard Cole
PCT Legal Examiner
PCT Legal Office

Anthony Smith
Attorney-Advisor
PCT Legal Office
Tel: (703) 308-6314
Fax: (703) 308-6459

21 NOV 2002

UNITED STATES PATENT AND TRADEMARK OFFICE

COMMISSIONER FOR PATENTS
UNITED STATES PATENT AND TRADEMARK OFFICE
WASHINGTON, D.C. 20231
www.uspto.gov

Benoit Castel
Young & Thompson
745 23rd Street
Arlington, VA 22202

In re Application of	:	
ASLIN et al.	:	
Application No.: 10/018,242	:	
PCT No.: PCT/SE00/01278	:	DECISION
Int. Filing Date: 16 June 2000	:	
Priority Date: 18 June 1999	:	
Attorney Docket No.: P4811US00/EB/MR	:	
For: INHALER		

This decision is in response to applicants' "Renewed Submission under 37 CFR 1.42" filed on 01 October 2002. In a decision dated 06 September 2002, applicants' request filed 01 July 2002 was dismissed because the declaration was defective under 37 CFR 497(b).

On 01 October 2002, applicants filed the present renewed request accompanied by an declaration/power of attorney executed by Rigmor Blomqvist and Nikolaus Blomqvist as the "legal representative" of the deceased inventor, Nils Blomqvist.

DISCUSSION

Pursuant to 37 CFR 1.42, first sentence:

> "In case of the death of the inventor, the legal representative (executor, administrator, etc.) of the deceased inventor may make the necessary oath or declaration, and apply for and obtain a patent."

The declaration filed 01 October 2002 is executed by Rigmor Blomqvist and Nikolaus Blomqvist as the "legal representative" of the deceased inventor, Nils Blomqvist. The declaration is acceptable under 37 CFR 1.42 and complies with 37 CFR 1.497(a)-(b). Accordingly, the requirements for entry into national stage under 35 U.S.C. 371(c) were completed as of 01 October 2002.

CONCLUSION

The papers filed under 37 CFR 1.42 are ACCEPTED.

The application has an international filing date of 16 June 2000, under 35 U.S.C. 363, and a 35 U.S.C. 371(c) date of **01 October 2002**.

This application is being forwarded to the National Stage Processing Branch of the International Division for continued national stage processing.

Anthony Smith

Anthony Smith
Attorney-Advisor
Office of PCT Legal Administration
Tel: (703) 308-6314
Fax: (703) 308-6459

UNITED STATES PATENT AND TRADEMARK OFFICE

Commissioner for Patents
United States Patent and Trademark Office
P.O. Box 1450
Alexandria, VA 22313-1450
www.uspto.gov

Paper No.

Barnes & Thornburg
11 South Meridian Street
Indianapolis IN 46204

COPY MAILED
MAR 1 1 2005
OFFICE OF PETITIONS

In re Application of :
George Eustace Joannou :
Application No. 10/018,308 : DECISION ON PETITION
Filed: January 24, 2002 :
Attorney Docket No. JOANNOU :

This is a decision on the petition filed September 24, 2003, pursuant to 37 CFR 1.137(b), to revive the above-identified application.

The petition is **GRANTED**.

The above-identified application became abandoned for failure to time pay the Issue Fee within the statutory period of three months from the mailing date, June 16, 2003, of the Notice of Allowance. This period is not extendable. No Issue Fee having been paid, the above-identified application became abandoned effective September 17, 2003, by operation of law. As the abandonment was not made of record, no Notice of Abandonment was mailed.

On instant petition, petitioner paid the petition fee and made the required statement of unintentional delay. In addition, petitioners submitted a Request for Continued Examination (RCE), the RCE fee, an Information Disclosure Statement and authorization to charge any required fees to their Deposit Account. As stated in MPEP 711.03(c)IIA1:

> While the revival of applications abandoned for failure to timely prosecute and for failure to timely pay the issue fee are incorporated together in 37 CFR 1.137, the statutory provisions for the revival of an application abandoned for failure to timely prosecute and for failure to timely submit

the issue fee are mutually exclusive. See Brenner v. Ebbert, 398 F.2d 762, 157 USPQ 609 (D.C. Cir. 1968). 35 U.S.C. 41(a)(7) authorizes the acceptance of an "unintentionally delayed payment of the fee for issuing each patent." Thus, 35 U.S.C. 41(a)(7) and 151 each require payment of the issue fee as a condition of reviving an application abandoned or patent lapsed for failure to pay the issue fee. Therefore, the filing of a continuing application (or request for continued examination) without payment of the issue fee or any outstanding balance thereof is not an acceptable reply in an application abandoned or patent lapsed for failure to pay the issue fee or any portion thereof.

Accordingly, to satisfy the required reply requirement of § 1.137(b), the Issue Fee (at the amount in effect on September 24, 2003) has been charged to Deposit Account No. 10-0435, as authorized. Petitioners have met all requirements for a grantable petition under 37 CFR 1.137(b).

Petitioner is advised that the issue fee cannot be refunded. If, however, the above-identified application is again allowed, petitioner may request that it be applied towards the issue fee required by the new Notice of Allowance[1]

As petitioner is aware, prosecution of this application has continued. This petition is being granted to close the gap in prosecution.

Technology Center AU 1625 has been advised of this decision reviving the application. The application has thereby been forwarded to TC 1625 for appropriate action.

Telephone inquiries related to this decision should be directed to the undersigned at (571) 272-3219.

Nancy Johnson
Senior Petitions Attorney
Office of Petitions

---

[1] The request to apply the issue fee to the new Notice may be satisfied by completing and returning the new Issue Fee Transmittal Form PTOL-85(b), which includes language to the effect that: "Commissioner for Patents is requested to apply the Issue Fee and Publication Fee (if any) or re-apply any previously paid Issue Fee to the application identified above." Petitioner is advised that, whether a fee is indicated as being due or not, the Issue Fee Transmittal Form **must** be completed and timely submitted to avoid abandonment. Note the language in bold text on the first page of the Notice of Allowance and Fee(s) Due (PTOL-85).

03 DEC 2002

UNITED STATES PATENT AND TRADEMARK OFFICE

COMMISSIONER FOR PATENTS
UNITED STATES PATENT AND TRADEMARK OFFICE
WASHINGTON, D.C. 20231
www.uspto.gov

Michael K. Mutter
Birch, Stewart, Kolasch & Birch, LLP
P.O. Box 747
Falls Church, VA 22040-0747

In re Application of WHITAKER Serial No.: 10/018,316 PCT No.: PCT/SE00/01302 Int. Filing Date: 19 June 2000 Priority Date: 24 June 1999 Atty Docket No.: 0091-0207P For: SHAPE CONFORMING SURFACE COVERING	DECISION ON PETITION UNDER 37 CFR 1.47(b)

This decision is in response to the petition under 37 CFR 1.47(b) filed 10 April 2002 to accept the application without the signature of inventor Derek Whitaker.

BACKGROUND

On 19 June 2000, applicant filed international application PCT/SE00/01302. A copy of the international application was communicated to the United States Patent and Trademark Office from the International Bureau on 04 January 2001. A Demand for international preliminary examination, in which the United States was elected was filed prior to the expiration of nineteen months from the priority date. Accordingly, the thirty-month period for paying the basic national fee in the United States expired at midnight on 24 December 2001.

On 18 December 2001, applicant filed a transmittal letter for entry into the national stage in the United States, which was accompanied by the requisite basic national fee as required by 35 U.S.C. 371(c)(1); an Information Disclosure Statement and a FIRST preliminary amendment. An oath or declaration as required by 35 U.S.C. 371 (c)(4) was not filed.

On 14 February 2002, applicant was mailed a NOTIFICATION OF MISSING REQUIREMENTS UNDER 35 U.S.C. 371 (Form PCT/DO/EO/905) informing applicant of the need to provide an oath or declaration of the inventors, in compliance with 37 CFR 1.497(a) and (b), identifying the application by the International application number and international filing date. Applicant was given two months to respond and advised that this time period could be extended with a proper petition and payment of fees.

On 10 April 2001, applicant responded with the present petition under 37 CFR 1.47(b) to accept the application without the signature of inventor Derek Whitaker.

DISCUSSION

A petition under 37 CFR 1.47(b) must be accompanied by: (1) the requisite petition fee under 37 CFR 1.17(I); (2) factual proof that the inventor refuses to execute the application or cannot be reached after diligent effort; (3) a statement of the last known address of the non-signing inventor; (4) an oath or declaration executed by the 37 CFR 1.47(b) applicant on behalf of and as an agent for the non-signing inventor; (5) proof of proprietary interest in the application; and, (6) a showing that such action is necessary to preserve the rights of the parties or to prevent irreparable damages. With the filing of the present petition and papers, applicant has satisfied items (1), (3), (4) and (5).

Regarding item (2) above, petitioner has not provided any evidence to show that Mr. Whitaker has been provided with a complete set of the application papers as required under the Manual of Patent Examining Procedure (MPEP) section 409.03 (d). Applicant has merely alleged that Mr. Whitaker refuses to execute the declaration, however, nowhere in the petition nor accompanying papers, is it stated that a complete set of papers (namely, specification, including claims, drawings and oath or declaration) was presented to Mr. Whitaker. In view of the above, item (2) has not been satisfied. In order to satisfy this requirement, such a statement must be signed by someone with first hand knowledge and must set forth specific facts as to the attempts to obtain Mr. Whitaker's signature, including presenting him with a complete set of application papers and his subsequent refusal.

As to item (6), applicant has not made a showing nor provided a statement that such action is necessary to preserve the rights of the parties or to prevent irreparable damages.

CONCLUSION

For the reasons stated above, applicant's petition under 37 CFR 1.47(b) is **DISMISSED without prejudice**.

If reconsideration on the merits of this petition is desired, a proper response must be filed within **TWO (2) MONTHS** from the mailing date of this decision. Any reconsideration request should include a cover letter entitled, "Renewed Petition Under 37 CFR 1.47(b)." No additional petition fee is required. Extensions of time may be obtained under 37 CFR 1.136(a).

Should status under 37 CFR 1.47(b) not be successfully completed, the international application will be viewed as having become abandoned with respect to the United States of America.

Any further correspondence with respect to this matter should be directed to the Assistant Commissioner for Patents, Box PCT, Washington, D.C. 20231, with the contents of the letter directed to the attention of the PCT Legal Office.

Richard Cole
Legal Examiner
PCT Legal Office

Derek A. Putonen
Petitions Attorney
PCT Legal Office
Tel: (703) 305-0130
Fax: (703) 308-6459

05 JUN 2003

UNITED STATES PATENT AND TRADEMARK OFFICE

COMMISSIONER FOR PATENTS
UNITED STATES PATENT AND TRADEMARK OFFICE
P.O. BOX 1450
ALEXANDRIA, VA 22313-1450
www.uspto.gov

05 JUN 2003

#7

Michael K. Mutter
Birch, Stewart, Kolasch & Birch, LLP
P.O. Box 747
Falls Church, VA 22040-0747

In re Application of	:	
WHITAKER	:	DECISION ON RENEWED
Serial No.: 10/018,316	:	
PCT No.: PCT/SE00/01302	:	PETITION UNDER
Int. Filing Date: 19 June 2000	:	
Priority Date: 24 June 1999	:	37 CFR 1.47(b)
Atty Docket No.: 0091-0207P	:	
For: SHAPE CONFORMING SURFACE	:	
COVERING	:	

This decision is in response to applicant's "Renewed Petition Under 37 CFR 1.47(b)" filed 10 April 2002 in the United States Patent and Trademark Office (USPTO).

BACKGROUND

On 03 December 2002, applicant was mailed a decision dismissing applicant's petition under 37 CFR 1.47(b) to accept the application without the signature of inventor Derek Whitaker. Applicant was afforded two months to file any request for reconsideration and advised that the period for reply could be extended with a proper petition and payment of the extension of time fee.

On 03 March 2003, applicant responded with the present renewed petition accompanied by a petition for an one-month extension of time and payment of the extension of time fee. With the filing of the petition and payment of the extension fee the renewed petition is considered timely filed.

DISCUSSION

As detailed in the decision mailed 03 December 2003, a petition under 37 CFR 1.47(b) must be accompanied by: (1) the requisite petition fee under 37 CFR 1.17(I); (2) factual proof that the inventor refuses to execute the application or cannot be reached after diligent effort; (3) a statement of the last known address of the non-signing inventor; (4) an oath or declaration executed by the 37 CFR 1.47(b) applicant on behalf of and as an agent for the non-signing inventor; (5) proof of proprietary interest in the application; and, (6) a showing that such action is necessary to preserve the rights of the parties or to prevent irreparable damages. Applicant previously satisfied items (1), (3), (4) and (5).

Regarding item (2) above, petitioner has provided a declaration from an individual with first-hand knowledge that Mr. Whitaker was present with a complete set of application papers prior to his refusal to execute the oath/declaration.

As to item (6), applicant has now provided a statement that such action is necessary to preserve the rights of the parties or to prevent irreparable damages.

It is noted that applicant was previously advised that the declaration filed 10 April 2002 was compliant. However, a closer review of the document finds this not to be the case. Specifically, the filing date for the international application is 19 June 2000; but it is listed on the filed declaration as 18 December 2001. In addition, the declaration does not provide the citizenship of the non-signing inventor.

As such, it is not possible to grant applicant's renewed petition at this time.

CONCLUSION

For the reasons stated above, applicant's petition under 37 CFR 1.47(b) is **DISMISSED**.

If reconsideration of this decision is desired, a proper response must be filed within **TWO (2) MONTHS** from the mail date of this decision. A proper response must include a compliant oath or declaration remedying the faults detailed above. Extensions of time may be obtained under 37 CFR 1.136(a).

Any further correspondence with respect to this matter should be directed to Mail Stop PCT, Commissioner for Patents, Office of PCT Legal Administration, P.O. Box 1450, Alexandria, Virginia 22313-1450, with the contents of the letter marked to the attention of the Office of PCT Legal Administration.

Boris Milef
PCT Legal Examiner
Office of PCT Legal Administration

Derek A. Putonen
Attorney Advisor
Office of PCT Legal Administration
Tel: (703) 305-0130
Fax: (703) 308-6459

UNITED STATES PATENT AND TRADEMARK OFFICE

COMMISSIONER FOR PATENTS
UNITED STATES PATENT AND TRADEMARK OFFICE
P.O. BOX 1450
ALEXANDRIA, VA 22313-1450
www.uspto.gov

17 SEP 2003

Michael K. Mutter
Birch, Stewart, Kolasch & Birch, LLP
P.O. Box 747
Falls Church, VA 22040-0747

In re Application of WHITAKER U.S. Serial No.: 10/018,316 PCT No.: PCT/SE00/01302 Int. Filing Date: 19 June 2000 Priority Date: 24 June 1999 Atty Docket No.: 0091-0207P For: SHAPE CONFORMING SURFACE COVERING	DECISION ON RENEWED PETITION UNDER 37 CFR 1.47(b)

This decision is in response to applicant's "Renewed Petition Under 37 CFR 1.47(b)" filed 05 August 2003 in the United States Patent and Trademark Office (USPTO).

BACKGROUND

On 05 June 2003, applicant was mailed a decision dismissing applicant's petition under 37 CFR 1.47(b) to accept the application without the signature of inventor Derek Whitaker. Applicant was afforded two months to file a compliant declaration under 37 CFR 1.497(a)-(b) and advised that the period for reply could be extended with a proper petition and payment of the extension of time fee.

On 05 August 2003, applicant responded with the present renewed petition accompanied by a newly executed combined declaration and power of attorney executed by Anders Wilhelmsen on behalf of the non-signing inventor Derek Whitaker and as Chairman of the corporate applicant, Flexiteek, International A/S.

DISCUSSION

As detailed in the decision mailed 05 June 2003, a review of the previously filed combined declaration and power of attorney found that while the filing date for the international application is 19 June 2000, the international filing date was listed on the filed declaration as 18 December 2001. In addition, the declaration did not provide the citizenship of the non-signing inventor. A review of the presently filed combined declaration and power of attorney finds that both defects have been cured and the filed document is in compliance with 37 CFR 1.497(a)-(b).

As such, it is proper to grant applicant's renewed petition at this time.

CONCLUSION

For the reasons stated above, applicant's renewed petition under 37 CFR 1.47(b) is **GRANTED**.

As provided in 37 CFR 1.47(b), a notice of the filing of this application will be forwarded to the non-signing inventor at his last known address of record.

A notice of the filing of the application under 37 CFR 1.47(b) will be published in the Official Gazette.

This application will be given an international application filing date of 19 June 2000 and a date of **05 August 2003** under 35 U.S.C. 371.

This application is being returned to the DO/EO/US for processing in accordance with this decision, namely, the mailing of a NOTIFICATION OF ACCEPTANCE UNDER 35 U.S.C. 371 (Form PCT/DO/EO/903).

Derek A. Putonen
Attorney Advisor
Office of PCT Legal Administration
Tel: (703) 305-0130
Fax: (703) 308-6459

UNITED STATES PATENT AND TRADEMARK OFFICE

COMMISSIONER FOR PATENTS
UNITED STATES PATENT AND TRADEMARK OFFICE
P.O. BOX 1450
ALEXANDRIA, VA 22313-1450
www.uspto.gov

17 SEP 2003

Mr. Derek Gordon Whitaker
29 Welwick Road, Patrington
East Yorkshire, HU12 Orp
ENGLAND

In re Application of
WHITAKER
U.S. Serial No.: 10/018,316
PCT No.: PCT/SE00/01302
Int. Filing Date: 19 June 2000
Priority Date: 24 June 1999
Atty Docket No.: 0091-0207P
For: SHAPE CONFORMING SURFACE COVERING

Dear Mr. Whitaker:

You are named as an inventor in the above identified United States patent application, filed under the provisions of 37 CFR 1.47(a) and 35 U.S.C. 116. Should a patent be granted, you will be designated as an inventor.

As a named inventor, you are entitled to inspect any paper in the file wrapper of the application, order copies of all or any part thereof (at a prepaid cost per 37 CFR 1.19) or to make your position of record in the application. Alternately, you may arrange to do any of the preceding through a registered patent agent or attorney presenting written authorization from you. If you care to join in the application, counsel of record (see below) would presumably assist you. Joining in the application would entail the filing of the appropriate oath or declaration by you pursuant to 37 CFR 1.63.

Derek A. Putonen
Attorney Advisor
Office of PCT Legal Administration

Michael K. Mutter
Birch, Stewart, Kolasch & Birch, LLP
P.O. Box 747
Falls Church, VA USA 22040-0747

UNITED STATES PATENT AND TRADEMARK OFFICE

Commissioner for Patents
United States Patent and Trademark Office
P.O. Box 1450
Alexandria, VA 22313-1450
www.uspto.gov

Date : September 23, 2009

Patent No: :7171354
Inventor(s) :Koji YOSHIDA et al.
Issued :January 30, 2007
Title :SPEECH DECODER AND CODE ERROR COMPENSATION

Re: Request for Certificate of Correction

Consideration has been given your request for the issuance of a certificate of correction for the above-identified patent under the provisions of 37 CFR 1.322 and/or 1.323.

Assignees' names and addresses (assignment data) printed in a patent are based *solely* on information supplied in the appropriate space for identifying the assignment data, i.e., item 3 of the Fee(s) Transmittal Form PTOL-85B. After payment of the issue fee, correction of assignment data submitted on the PTOL-85B can only be done by Certificate of Correction under 37 CFR 1.323, with a request under 37 CFR 3.81(b).

A request for a patent to be corrected to state the name of the assignee must:

A. state that the assignment was submitted for recordation as set forth in 37 CFR 3.11 before issuance of the patent;

B. include a request for a certificate of correction under 37 CFR 1.323 along with the fee set forth in 37 CFR 1.20(a); and

C. include the processing fee set forth in 37 CFR 1.17(i).

If the request is granted, Certificates of Correction Branch will be notified that a Certificate of Correction may be issued.

See Manual of Patent Examining Procedure, Section 1481.01 (Rev. 3) (Oct. 2005).

Applicant has not included items A and or C above, accordingly, the request for Certificate of Correction to add or change the assignee data is dismissed.

Any request under 37 CFR 3.81(b) should be directed to the following address or facsimile number:

By mail: Mail Stop PETITIONS
Commissioner for Patents
Post Office Box 1450
Alexandria, VA 22313-1450

By hand: Customer Service Window
Randolph Building
401 Dulany Street
Alexandria, VA 22314

By fax: 571-273-8300
ATTN: Office of Petitions

EFS web uspto.gov/ebc/index.html
(must be registered as an e-filer to submit responses)
Technical Support 1-866-217-9197

Any inquiry concerning this communication should be directed to Ms. A. Green at (703) 756-1541.

A. Green

Mary Diggs, Supervisor
Decisions & Certificates
of Correction Branch
(703) 756-1580 or (703) 756- 1541

Dickinson Wright, PLLC
1901 L. Street, N.W. Suite 800
Washington, DC 20036-3506

/arg

UNITED STATES PATENT AND TRADEMARK OFFICE

Commissioner for Patents
United States Patent and Trademark Office
Washington, D.C. 20231
www.uspto.gov

DICKINSON WRIGHT PLLC
JAMES E. LEDBETTER, ESQ.
INTERNATIONAL SQUARE
1875 EYE STREET, NW., SUITE 1200
WASHINGTON DC 20006

COPY MAILED

DEC 2 2 2009

OFFICE OF PETITIONS

In re Patent No. 7,171,354	:	
Issue Date: 30 January, 2007	:	
Application No. 10/018,317	:	ON PETITION
Filed: 18 December, 2001	:	
Attorney Docket No. 009289-01226	:	

This is a decision on the petition filed 31 August, 2009, to waive the rules pursuant to 37 C.F.R. §1.183 and accept the correction of the assignee on the front page of the above-identified patent pursuant to 37 C.F.R. §1.323 and §3.81(a).

Petitioner refers in is petition of 31 August, 2009, to a conversation averred to have taken place with a member of the staff of the Office.

Petitioner—as one registered to practice before the Office—is aware that such a reference is inappropriate.

Petitioner is aware that all practice before the Office is in writing (see: 37 C.F.R. §1.2[1]) and the proper authority for action on any matter in this regard are the statutes (35 U.S.C.), regulations (37 C.F.R.) and the commentary on policy (MPEP).

Therefore, no telephone discussion may be controlling or considered authority for Petitioner's action(s)—nor may it provide suggestion as to a result to follow.

[1] The regulations at 37 C.F.R. §1.2 provide:
§1.2 Business to be transacted in writing.
All business with the Patent and Trademark Office should be transacted in writing. The personal attendance of Petitioners or their attorneys or agents at the Patent and Trademark Office is unnecessary. The action of the Patent and Trademark Office will be based exclusively on the written record in the Office. No attention will be paid to any alleged oral promise, stipulation, or understanding in relation to which there is disagreement or doubt.

Patent No. 7,171,354
Application No. 10/018,317

The requirements of the instant matter are set forth in in the Commentary at MPEP §307—Petitioner must provide not only the statement and showings, but also the proper fees, which requirement Petitioner has not fully satisfied with payment and/or authorization of charge.

The petition is **DISMISSED**.

Petitioner requests issuance of a certificate of correction adding the name of "NEC Corporation."

The regulations at 37 C.F.R. §3.81(a) permits the patent to issue to the assignee, provided that, at the time the issue fee is paid, the name of an assignee is provided. The regulations at 37 C.F.R. §3.81 (b) permits the patent to issue in the name of an assignee if the assignment was submitted after payment of the issue fee but prior to issuance of a patent.

The guidance in the Commentary at MPEP §307 provides:

> **307 Issue to Assignee [R-3]**
>
> *35 U.S.C. §152. Issue of patent to assignee.*
> Patents may be granted to the assignee of the inventor of record in the Patent and Trademark Office, upon the application made and the specification sworn to by the inventor, except as otherwise provided in this title.
>
> **>
> *37 C.F.R. §3.81. Issue of patent to assignee.*
> (a)*With payment of the issue fee*: An application may issue in the name of the assignee consistent with the application's assignment where a request for such issuance is submitted with payment of the issue fee, provided the assignment has been previously recorded in the Office. If the assignment has not been previously recorded, the request must state that the document has been filed for recordation as set forth in §3.11.
> (b)*After payment of the issue fee*: Any request for issuance of an application in the name of the assignee submitted after the date of payment of the issue fee, and any request for a patent to be corrected to state the name of the assignee, must state that the assignment was submitted for recordation as set forth in § 3.11before issuance of the patent, and must include a request for a certificate of correction under §1.323 of this chapter (accompanied by the fee set forth in § 1.20(a)) and the processing fee set forth in §1.17 (i) of this chapter.

Patent No. 7,171,354
Application No. 10/018,317

(c)*Partial assignees*. (1) If one or more assignee, together with one or more inventor, holds the entire right, title, and interest in the application, the patent may issue in the names of the assignee and the inventor.

(2)If multiple assignees hold the entire right, title, and interest to the exclusion of all the inventors, the patent may issue in the names of the multiple assignees.<

Normally, for a patent to issue to an assignee, a request for issuance of the application in the name* of the assignee* must be filed in the United States Patent and Trademark Office (Office) at a date not later than the day on which the issue fee is paid. **>Such a request must indicate that the assignment has been previously recorded in the Office. If the assignment has not been previously recorded in the Office, the request must state that the document has been filed for recordation as set forth in 37 C.F.R. §3.11. See 37 C.F.R. §3.81(a).

If a request for issuance to an assignee pursuant to 37 C.F.R. §3.81(b) is submitted after the day on which the issue fee is paid, the request under 37 C.F.R. §3.81(b) must include a request for a certificate of correction under 37 C.F.R. §1.323 (accompanied by the fee set forth in 37 C.F.R. §1.20(a)) and the processing fee set forth in 37 C.F.R. §1.17(i). The request under 37 C.F.R. §3.81(b) must state that the assignment was submitted for recordation as set forth in 37 C.F.R. §3.11 before issuance of the patent. The Office will issue a certificate of correction to reflect that the patent issued to the assignee provided the requirements of 37 C.F.R. §3.81(b) and 37 C.F.Rz. §1.323 are complied with.<

Only the first appearing name of an assignee will be printed on the patent where multiple names for the same party are identified on the **>Fee(s)< Transmittal form, PTOL-85B. Such multiple names may occur when both a legal name and an "also known as" or "doing business as" name is also included. This printing practice will not, however, affect the existing practice of recording assignments with the Office in the Assignment Division. The assignee entry on form PTOL-85B should still be completed to indicate the assignment data as recorded in the Office. For example, the assignment filed in the Office and, therefore, the PTOL-85B assignee entry might read "Smith Company doing business as (d.b.a.) Jones Company." The assignee entry on the printed patent will read "Smith Company."

Irrespective of whether the assignee participates in the prosecution of the application, the patent issues to the assignee if so indicated on the **>Fee(s)< Transmittal form PTOL-85B. Unless an assignee's name and address are identified Transmittal form PTOL-the applicant. Assignment will be based solely on >Assignment information updated after a patent is reflective of the assignment subsequent to the issuance assignment information an assignment search on and by inspecting the documents.<

A request for a certificate 37 CFR 1.323 (see MPEP from incomplete or erroneous furnished >, or a missing PTOL-85B will not be under 37 CFR 3.81(b) assignment was submitted in 37 CFR 3.11 before request under 37 CFR the Office of Petitions

(A)the *>processing< 1.17(*>i<);
(B)a request **>for the name of the assignee, corrected to state the name
(C)a statement that submitted for recordation 3.11before the issuance of the
(D)a **>request under 37 CFR 1.323 accompanied in 37 CFR 1.20(a).<

The regulations at 37 C.F.R. §3.81(b), effective June 25, 2004, provide:

> *After payment of the issue fee:* Any request for issuance of an application in the name of the assignee submitted after the date of payment of the issue fee, and any request for a patent to be corrected to state the name of the assignee, must state that the assignment was submitted for recordation as set forth in § 3.11 before issuance of the patent, and must include a request for a certificate of correction under § 1.323 of this chapter (accompanied by the fee set forth in .§1.20(a) and the processing fee set forth in §1.17(i) of this chapter.

On any renewed petition, Petitioner must satisfy all showing and fee requirements.

Out of an abundance of caution, Petitioners always are reminded that those registered to practice and all others who make representations before the Office are reminded to inquire into the underlying facts of representations made to the Office and support averments with the appropriate documentation–since all owe to the Office the continuing duty to disclose.[2]

The availability of applications and application papers online to applicants/practitioners who diligently associate their Customer Number with the respective application(s) now provides an applicant/practitioner on-demand information as to events/transactions in an application.

CONCLUSION

Accordingly, the petition under 37 C.F.R. 37 C.F.R. §1.183, §1.323 and §3.81 is **dismissed**.

Further correspondence with respect to this matter should be addressed as follows:

---

[2] See supplement of 17 June, 1999. The Patent and Trademark Office is relying on Petitioner's duty of candor and good faith and accepting a statement made by Petitioner. See Changes to Patent Practice and Procedure, 62 Fed. Reg. at 53160 and 53178, 1203 Off. Gaz. Pat. Office at 88 and 103 (responses to comments 64 and 109)(applicant obligated under 37 C.F.R. §10.18 to inquire into the underlying facts and circumstances when providing statements to the Patent and Trademark Office).

Patent No. 7,373,686
Application No. 11/385,413

By Mail: Mail Stop PETITION
Commissioner for Patents
P. O. Box 1450
Alexandria, VA 22313-1450

By hand: U. S. Patent and Trademark Office
Customer Service Window, Mail Stop Petitions
Randolph Building
401 Dulany Street
Alexandria, VA 22314

By facsimile: **(571) 273-8300**
Attn: Office of Petitions

Telephone inquiries regarding this decision may be directed to the undersigned at (571) 272-3214—it is noted, however, that all practice before the Office is in writing (see: 37 C.F.R. §1.2[3]) and the proper authority for action on any matter in this regard are the statutes (35 U.S.C.), regulations (37 C.F.R.) and the commentary on policy (MPEP). Therefore, no telephone discussion may be controlling or considered authority for Petitioner's action(s).

/John J. Gillon, Jr./
John J. Gillon, Jr.
Senior Attorney
Office of Petitions

---

[3] The regulations at 37 C.F.R. §1.2 provide:
§1.2 Business to be transacted in writing.
All business with the Patent and Trademark Office should be transacted in writing. The personal attendance of Petitioners or their attorneys or agents at the Patent and Trademark Office is unnecessary. The action of the Patent and Trademark Office will be based exclusively on the written record in the Office. No attention will be paid to any alleged oral promise, stipulation, or understanding in relation to which there is disagreement or doubt.

17 JUN 2003

UNITED STATES PATENT AND TRADEMARK OFFICE

COMMISSIONER FOR PATENTS
UNITED STATES PATENT AND TRADEMARK OFFICE
P.O. BOX 1450
ALEXANDRIA, VA 22313-1450
www.uspto.gov

Patterson, Thuente, Skaar & Christensen, L.L.C.
US Bank Building, Suite 2000
777 East Wisconsin Avenue
Milwaukee, WI 53202

In re Application of LAMBERT	:	
U.S. Application No.: 10/018,318	:	
PCT Application No.: PCT/FR01/01002	:	
Int. Filing Date: 04 April 2001	:	DECISION
Priority Date Claimed: 14 April 2000	:	
Attorney Docket No.: W1028.152-US-01 (136.167)	:	
For: CHECK LIST SYSTEM FOR FEEDBACK	:	
DATA CONCERNING DELIVERY OF	:	
POSTAL OBJECTS OR MESSAGES	:	

This is in response to applicant's "Petition Under 37 CFR 1.182 to Correct the Identification of an International Application That Has Entered the National Phase" filed 18 March 2003.

BACKGROUND

On 04 April 2001, applicant filed international application PCT/FR01/01002, which claimed priority of an earlier France application filed 14 April 2000. A copy of the international application was communicated to the USPTO from the International Bureau on 25 October 2001. The twenty-month period for paying the basic national fee in the United States expired on 14 December 2001.

On 13 December 2001, applicant filed national stage papers in the United States Designated/Elected Office (DO/EO/US). The submission was accompanied by, *inter alia*, the basic national fee required by 35 U.S.C. 371(c)(1).

On 18 March 2002, the DO/EO/US mailed a Notification of Acceptance of Application Under 35 U.S.C. 371 (Form PCT/DO/EO/903).

On 18 March 2003, applicant filed the present petition under 37 CFR 1.182, which is being treated as a petition to correct the Transmittal Letter.

DISCUSSION

The petition states that the Transmittal Letter erroneously listed PCT/FR00/01002 as the International Application Number and that the correct International Application Number is PCT/FR01/01002. The petition further states that the error was made by inadvertent mistake. Applicant's explanation for the discrepancy is accepted.

CONCLUSION

For the reasons above, the petition under 37 CFR 1.182 is GRANTED.

This application is being forwarded to the United States Designated/Elected Office (DO/EO/US) for further processing in accordance with this decision.

Bryan Tung
PCT Legal Examiner
PCT Legal Office

Telephone: 703-308-6614
Facsimile: 703-308-6459

UNITED STATES PATENT AND TRADEMARK OFFICE

COMMISSIONER FOR PATENTS
UNITED STATES PATENT AND TRADEMARK OFFICE
P.O. BOX 1450
ALEXANDRIA, VA 22313-1450
www.uspto.gov

#5

12 AUG 2003

David S. Harper
McDonnell Boehnen Hulbert & Berghoff
300 South Wacker Drive
Suite 3200
Chicago, IL 60606

In re Application of KREBSFANGER, Niels et al. Application No.: 10/018,320 PCT No.: PCT/DE01/00597 Int. Filing Date: 15 February 2001 Priority Date: 14 March 2000 Attorney Docket No.: 01-1637 For: STABLE EXPRESSION OF POLYMORPHIC FORMS OF HUMAN CYTOCHROME	DECISION ON PETITION UNDER 37 CFR 1.181

This decision is in response to "Petition Under 37 C.F.R. 1.137(a)," filed with the United States Patent and Trademark Office on 31 January 2003.

BACKGROUND

On 15 February 2001, applicant filed international application PCT/DE01/00597. A copy of the international application was communicated to the United States Patent and Trademark Office (USPTO) from the International Bureau on 20 September 2001. Accordingly, the twenty month period for paying the basic national fee in the United States expired on 14 November 2001.

On 12 November 2001, applicant filed a submission for entry into the national stage in the United States which was accompanied by, *inter alia*, the U.S. Basic National Fee.

On 31 January 2002, the Office mailed Notification of Missing Requirements (Form PCT/DO/EO/905) indicating that an oath or declaration in compliance with 37 CFR 1.497(a)-(b) was required and that the sequence listing contained in the application did not comply with 37 CFR 1.821-1.825.

On 09 January 2003, the Office mailed Notification of Abandonment (Form PCT/DO/EO/909) indicating that the application went abandoned.

On 31 January 2003, applicants submitted the instant petition.

DISCUSSION

The showing required to establish nonreceipt of an Office communication is set forth in the notice entitled *Withdrawing the Holding of Abandonment When Office Actions Are Not Received*, 1156 O.G. 53 (Nov. 16, 1993). The showing must include: (1) a statement by the practitioner that the Office action was not received by the practitioner; (2) a statement attesting that a search of the file jacket and docket records indicates that the Office action was not received; and (3) a copy of the docket record where the non-received Office action would have been entered had it been received (the docket record must also be referenced in practitioner's statement).

Practitioner indicates that he did not receive the Notification of Missing Requirements. Applicants assert that they have searched the docket records and there is no indication that the Notification was received.

However, applicants have not supplied the docket records for the firm on the day on which a response to the Notification would have been docketed. Rather, applicants have supplied the firm's correspondence log and the docket record for the individual application. Neither is acceptable.

CONCLUSION

For the reasons set forth above, the petition under 37 CFR 1.181 is **DISMISSED** without prejudice.

If reconsideration on the merits of this petition is desired, a proper reply must be filed within TWO (2) MONTHS from the mail date of this decision. Any reconsideration request should include a cover letter entitled "Renewed Petition Under 37 CFR 1.181."

Application remains **ABANDONED**.

Any further correspondence with respect to this matter should be addressed to the Mail Stop PCT, Commissioner for Patents, Office of PCT Legal Administration, P.O. Box 1450, Alexandria, Virginia 22313-1450, with the contents of the letter marked to the attention of the Office of PCT Legal Administration.

Leonard E. Smith
PCT Legal Examiner
PCT Legal Administration

Erin M. Pender
Attorney Advisor
PCT Legal Administration

Telephone: 703-305-0455
Facsimile: 703-308-6459

19 MAY 2004

UNITED STATES PATENT AND TRADEMARK OFFICE

#7

COMMISSIONER FOR PATENTS
UNITED STATES PATENT AND TRADEMARK OFFICE
P.O. BOX 1450
ALEXANDRIA, VA 22313-1450
www.uspto.gov

David S. Harper
McDonnell Boehnen Hulbert & Berghoff
300 South Wacker Drive
Suite 3200
Chicago, IL 60606

In re Application of KREBSFANGER, Niels et al. Application No.: 10/018,320 PCT No.: PCT/DE01/00597 Int. Filing Date: 15 February 2001 Priority Date: 14 March 2000 Attorney Docket No.: 01-1637 For: STABLE EXPRESSION OF POLYMORPHIC FORMS OF HUMAN CYTOCHROME	DECISION ON PETITION UNDER 37 CFR 1.181

This decision is in response to "Second Petition Under 37 C.F.R. 1.137(a)," filed with the United States Patent and Trademark Office on 05 September 2003. It has been treated as a petition under 37 CFR 1.181.

BACKGROUND

On 15 February 2001, applicants filed international application PCT/DE01/00597. A copy of the international application was communicated to the United States Patent and Trademark Office (USPTO) from the International Bureau on 20 September 2001. Accordingly, the twenty month period for paying the basic national fee in the United States expired on 14 November 2001.

On 12 November 2001, applicants filed a submission for entry into the national stage in the United States which was accompanied by, *inter alia*, the U.S. Basic National Fee.

On 31 January 2002, the Office mailed Notification of Missing Requirements (Form PCT/DO/EO/905) indicating that an oath or declaration in compliance with 37 CFR 1.497(a)-(b) was required and that the sequence listing contained in the application did not comply with 37 CFR 1.821-1.825.

On 09 January 2003, the Office mailed Notification of Abandonment (Form PCT/DO/EO/909) indicating that the application went abandoned.

On 31 January 2003, applicants submitted a petition.

On 12 August 2003, the Office mailed Decision On Petition Under 37 CFR 1.181, dismissing applicants' petition without prejudice.

On 05 September 2003, applicants submitted the instant renewed petition.

DISCUSSION

The showing required to establish nonreceipt of an Office communication is set forth in the notice entitled *Withdrawing the Holding of Abandonment When Office Actions Are Not Received*, 1156 O.G. 53 (Nov. 16, 1993). The showing must include: (1) a statement by the practitioner that the Office action was not received by the practitioner; (2) a statement attesting that a search of the file jacket and docket records indicates that the Office action was not received; and (3) a copy of the docket record where the non-received Office action would have been entered had it been received (the docket record must also be referenced in practitioner's statement).

Items (1) and (2) were previously satisfied.

Item (3) has now been satisfied.

CONCLUSION

For the reasons set forth above, the petition under 37 CFR 1.181 is **GRANTED**.

The Notification of Missing Requirements (Form PCT/DO/EO/905) mailed 31 January 2002 is **VACATED**.

The Notification of Abandonment (Form PCT/DO/EO/909) mailed 09 January 2003 is **VACATED**.

This application is being forwarded to the National Stage Processing Division of the Office of the PCT Operations for continued processing, including mailing of a new Notification of Missing Requirements (Form PCT/DO/EO/905).

Erin M Pender

Erin M. Pender
Attorney Advisor
PCT Legal Administration

Telephone: 703-305-0455
Facsimile: 703-308-6459

10/018,323

SPE RESPONSE FOR CERTIFICATE OF CORRECTION

Paper No.:20050510

DATE : May 10, 2005

TO SPE OF : ART UNIT 2834

SUBJECT : Request for Certificate of Correction on Patent No.: 6,809,434

A response is requested with respect to the accompanying request for a certificate of correction.

Please complete this form and return with file, within **7** days to:
Certificates of Correction Branch - PK 3-910
Palm location **7590** - Tel. No. 305-8201

With respect to the change(s) requested, correcting Office and/or Applicant's errors, should the patent read as shown in the certificate of correction? No new matter should be introduced, nor should the scope or meaning of the claims be changed.

Thank You For Your Assistance **Certificates of Correction Branch**

The request for issuing the above-identified correction(s) is hereby:
Note your decision on the appropriate box.

☒ **Approved** All changes apply.

☐ **Approved in Part** Specify below which changes **do not** apply.

☐ **Denied** State the reasons for denial below.

Comments:

SPE: Darren E. Schuberg **Art Unit** 2834

UNITED STATES PATENT AND TRADEMARK OFFICE

Commissioner for Patents
United States Patent and Trademark Office
P.O. Box 1450
Alexandria, VA 22313-1450
www.uspto.gov

Paper No. 20

JONES DAY
222 EAST 41ST ST
NEW YORK NY 10017

COPY MAILED
SEP 07 2004
OFFICE OF PETITIONS

In re Application of Langley, et al. Application No. 10/018,324 Filed: March 29, 2002 Attorney Docket No. H0681.0006	: : : : :	ON PETITION

This is a decision on the petition under 37 CFR 1.137(b), filed June 16, 2004, to revive the above-identified application.

The petition under 37 CFR 1.137(b) is **GRANTED**.

The above-identified application became abandoned for failure to timely file a response to the final Office action mailed October 31, 2003. This Office action set a shortened statutory period for reply of three months. No extensions of time under 37 CFR 1.136(a) were obtained. Accordingly, the above-identified application became abandoned on February 1, 2004. The mailing of this decision precedes the mailing of a Notice of Abandonment.

With the instant petition, petitioner paid the petition fee, filed a reply in the form of an amendment, and made the proper statement of unintentional delay.

Pursuant to 37 CFR 1.136, an extension of time must be filed prior to the expiration of the maximum period obtainable for reply to avoid abandonment. Accordingly, since the $950.00 extension of time fee submitted with the petition on June 16, 2004 was subsequent to the maximum period obtainable for reply (April 30, 2004), this fee has been refunded to petitioner's Deposit Account 50-2215. In addition, the $330 fee for the Notice of Appeal has also been refunded to Deposit Account No. 50-2215.

The person signing the instant petition (Robert G. Gingher) requests a change of correspondence address to the address given in the instant petition. There is, however, no indication that the person signing the instant petition was ever given a power of attorney or authorization of agent to prosecute the above-identified application. If the person signing the instant petition desires to receive future correspondence regarding this application, the appropriate power of attorney or authorization of agent must be submitted. While a courtesy copy of this decision is being mailed to the person signing the instant petition, all future correspondence will be directed to the address currently of record until such time as appropriate instructions are received to the contrary.

The application file is being forwarded to Group Art Unit 2821 for consideration of the amendment filed June 16, 2004.

Telephone inquiries concerning this decision should be directed to the undersigned at (703) 305-0272.

Cliff Congo

Cliff Congo
Petitions Attorney
Office of Petitions

cc: Dickstein Shapiro Morin & Oshinsky LLP
1177 Avenue of the Americas
41st Floor
New York, NY 10036-2714

UNITED STATES PATENT AND TRADEMARK OFFICE

Commissioner for Patents
United States Patent and Trademark Office
P.O. Box 1450
Alexandria, VA 22313-1450
www.uspto.gov

DEC 14 2004

MUSERLIAN AND LUCAS AND MERCANTI, LLP
475 PARK AVENUE SOUTH
NEW YOURK, NY 10016

In re Application of	:
Laurent Heux et al	:
Serial No.: 10/018,326	: PETITION DECISION
Filed: December 10, 2001	:
Attorney Docket No.: 410.019	:

This is in response to the petition under 37 CFR 1.181, filed August 4, 2004, for withdrawal of abandonment of the above identified application based on failure to receive an Office action. The delay in acting on this petition is regretted.

A review of the file history shows that the examiner mailed an Office action to applicants on November 4, 2003, setting a three month shortened statutory period for reply. Upon failure to receive a reply the Office mailed a Notice of Abandonment to applicants on July 6, 2004. Applicants state that the Office action was never received and provide a statement and copies of mail received records establishing that the Office action was never received. In view of the evidence presented the Notice of Abandonment is withdrawn and the application is restored to pending status with the mailing of this decision.

The petition is **GRANTED**.

The application will be forwarded to a new examiner (the previous examiner has resigned from the Office) for mailing of a new Office action.

Should there be any questions about this decision please contact William R. Dixon, Jr., by letter addressed to Director, TC 1600, P.O. Box 1450, Alexandria, VA 22313-1450, or by telephone at 571-272-0519 or by facsimile sent to the general Office facsimile number.

Bruce M. Kisliuk
Director, Technology Center 1600

UNITED STATES PATENT AND TRADEMARK OFFICE

Commissioner for Patents
United States Patent and Trademark Office
P.O. Box 1450
Alexandria, VA 22313-1450
www.uspto.gov

NOVAK DRUCE DELUCA & QUIGG, LLP
1300 EYE STREET NW
SUITE 400 EAST
WASHINGTON, DC 20036

COPY MAILED

MAR 2 5 2005

OFFICE OF PETITIONS

In re Application of	:	
Harz et al.	:	
Application No. 10/018,339	:	ON PETITION
Filed: December 19, 2001	:	
Attorney Docket No. 50091	:	

This is a decision on the petition under 37 C.F.R. § 1.137(b), filed March 17, 2005, to revive the above-identified application.

The petition is **GRANTED.**

This application became abandoned for failure to timely reply to the no-final Office action mailed June 24, 2004. No extensions of time under the provisions of 37 CFR 1.136(a) were obtained. Accordingly, this application became abandoned on September 25, 2004. A Notice of Abandonment was mailed January 13, 2005.

Petitioner has met the requirements to revive the above-identified application pursuant to 37 CFR 1.137(b).

This matter is being referred to Technology Center 1600 for further examination on the merits.

Telephone inquiries regarding this decision should be directed to the undersigned at (571) 272-3282.

Liana Chase
Petitions Examiner
Office of Petitions
Office of the Deputy Commissioner
for Patent Examination Policy

14 DEC 2004

UNITED STATES PATENT AND TRADEMARK OFFICE

COMMISSIONER FOR PATENTS
UNITED STATES PATENT AND TRADEMARK OFFICE
P.O. BOX 1450
ALEXANDRIA, VA 22313-1450
www.uspto.gov

BASF CORPORATION
ANNE GERRY SABOURIN
26701 TELEGRAPH ROAD
SOUTHFIELD, MI 48034-2442

In re Application of BREMSER, Wolfgang Application No.: 10/018,350 PCT No.: PCT/EP00/05825 Int. Filing Date: 23 June 2000 Priority Date: 30 June 1999 Attorney Docket No.: IN-5544 For: COLORING EFFECT ... AND ITS USE	DECISION ON PETITION UNDER 37 CFR 1.181

This decision is in response to "Petition For Reconsideration of the Notification of Missing Requirements Under 35 U.S.C. 371," filed with the United States Patent and Trademark Office on 28 April 2003.

BACKGROUND

On 23 June 2000, applicant filed international application PCT/EP00/05825, claiming a priority date of 30 June 1999. A copy of the international application was communicated to the United States Patent and Trademark Office (USPTO) from the International Bureau on 11 January 2001. On 08 January 2001, applicant filed a Demand for international preliminary examination, prior to the expiration of nineteen months from the priority date. Accordingly, the thirty month period for paying the basic national fee in the United States expired on 31 December 2001 (30 December 2001 was a Sunday).

On 07 December 2001, applicant filed a submission for entry into the national stage in the United States which was accompanied by, *inter alia*, the U.S. Basic National Fee and a declaration of the inventor.

On 20 March 2002, the Office mailed Notification of Missing Requirements (Form PCT/DO/EO/905) indicating that an oath or declaration of the inventors was required as the current one did not properly identify the application to which it was directed.

On 28 April 2003, applicant submitted the instant petition to the Office.

On 27 October 2004, applicant submitted a second copy of the instant petition and a request for a corrected filing receipt.

DISCUSSION

The declaration correctly identified the application to which it was directed. The Notification of Missing Requirements (Form PCT/DO/EO/905) issued in error.

A corrected filing receipt is being sent under separate cover.

CONCLUSION

For the reasons set forth above, the petition under 37 CFR 1.181 is **GRANTED**.

The Notification of Missing Requirements with a mail date of 20 March 2002 is **VACATED**.

This application is being forwarded to the National Stage Processing Division of the Office of the PCT Operations for continued processing.

Erin M. Pender

Erin M. Pender
Attorney Advisor
PCT Legal Administration

Telephone: 571-272-3292
Facsimile: 571-273-0459

UNITED STATES PATENT AND TRADEMARK OFFICE

Commissioner for Patents
United States Patent and Trademark Office
P.O. Box 1450
Alexandria, VA 22313-1450
www.uspto.gov

FLEIT KAIN GIBBONS GUTMAN BONGINI & BIANCO
21355 EAST DIXIE HIGHWAY
SUITE 115
MIAMI, FL 33180

COPY MAILED

FEB 0 9 2007

OFFICE OF PETITIONS

In re Application of	:	
Menz et al.	:	
Application No. 10/018372	:	DECISION
Filing or 371(c) Date: 12/12/2001	:	ON PETITION
Patent No.: 7101564	:	
Issue Date: 09/05/2006	:	
Attorney Docket No.	:	
740-X01-004	:	

This is a decision on the correspondence entitled "Petition to Correction Assignee Name in Patent Under 37 CFR 3.81(b)", filed October 16, 2006. The delay in treating this petition is regretted.

The Petition is **granted**.

Telephone inquiries concerning this matter should be directed to the undersigned at (571) 272-3232. Any questions concerning the issuance of the Certificate of Correction should be directed to the Certificate of Correction Branch at (703) 305-8309.

The application is being referred to the Certificate of Corrections Branch for issuance of the requested Certificate of Correction.

Derek L. Woods
Attorney
Office of Petitions

1 9 AUG 2002

UNITED STATES PATENT AND TRADEMARK OFFICE

#3

COMMISSIONER FOR PATENTS
UNITED STATES PATENT AND TRADEMARK OFFICE
WASHINGTON, D.C. 20231
www.uspto.gov

William M. Lee, Jr.
Lee, Mann, Smith, McWilliams, Sweeney & Ohlson
P.O. Box 2786
Chicago, IL 60690-2786

In re Application of	:	
RUSHBROOKE, et al.	:	
U.S. Application No.: 10/,018,387	:	DECISION ON PAPERS
PCT No.: PCT/GB00/01576	:	
Int. Filing Date: 20 April 2000	:	UNDER 37 CFR 1.43
Priority Date: 26 June 1999	:	
Attorney's Docket No.: 602-1551	:	
For: MICROPLATE READER	:	

This decision is in response to applicant's "Response to Communication From PCT Legal Office Dated April 16, 2002" filed 05 June 2002 in the United States Patent and Trademark Office (USPTO) which are being treated as a request for acknowledgment of status under 37 CFR 1.43.

BACKGROUND

On 16 April 2002, applicant was mailed a communication informing applicant that the combined declaration and power of attorney filed on 13 December 2001 did not comply with 37 CFR 1.497 (a)-(b). Specifically, the first named inventor, John Gordan RUSHBROOKE, did execute the filed declaration. Applicant was afforded two months to file a reply.

On 05 June 2002, applicant filed the present papers which included a newly executed declaration executed by Claire HOOPER as joint inventor and as the legal representative to the second joint inventor, John RUSHBROOKE.

DISCUSSION

Pursuant to 37 CFR 1.43:

"In case where an inventor is insane or otherwise legally incapacitated, the legal representative (guardian, conservator, etc.) of such inventor may make the necessary oath or declaration, and apply for and obtain the patent."

The filed declaration is executed by Claire HOOPER as the legal representative to the second joint inventor, John RUSHBROOKE. As evident by page 4 of the declaration, the information under the signature line for inventor RUSHBROOKE sets forth the residence, post office address and country of citizenship for Claire HOOPER but not John RUSHBROOKE as required under 37 CFR 1.497 and 1.63. This information must be provided for John

RUSHBROOKE.

CONCLUSION

Applicant's request under 37 CFR 1.43 is **DISMISSED, without prejudice**.

Applicants are hereby afforded **TWO (2) MONTHS** from the mail date of this decision to file an oath or declaration in compliance with 37 CFR 1.497 (a)-(b). Any reconsideration request should include a cover letter entitled, "Renewed Request Under 37 CFR 1.43." No additional petition fee is required. Extensions of time may be obtained under 37 CFR 1.136(a).

Any further correspondence with respect to this matter should be directed to the Assistant Commissioner for Patents, Box PCT, Washington, D.C. 20231, with the contents of the letter directed to the attention of the PCT Legal Office.

Boris Milef
Legal Examiner
PCT Legal Office

Derek A. Putonen
Petitions Attorney
PCT Legal Office
Tel: (703) 305-0130
Fax: (703) 308-6459

25 OCT 2002

#5

UNITED STATES PATENT AND TRADEMARK OFFICE

COMMISSIONER FOR PATENTS
UNITED STATES PATENT AND TRADEMARK OFFICE
WASHINGTON, D.C. 20231
www.uspto.gov

William M. Lee, Jr.
Lee, Mann, Smith, McWilliams, Sweeney & Ohlson
P.O. Box 2786
Chicago, IL 60690-2786

In re Application of
RUSHBROOKE, et al.
U.S. Application No.: 10/,018,387
PCT No.: PCT/GB00/01576
Int. Filing Date: 20 April 2000
Priority Date: 26 June 1999
Attorney's Docket No.: 602-1551
For: MICROPLATE READER

DECISION ON PAPERS

UNDER 37 CFR 1.43

This decision is in response to applicant's "Renewed Request Under 37 C.F.R. § 1.43" filed 10 September 2002 in the United States Patent and Trademark Office (USPTO).

BACKGROUND

On 15 August 2002, applicant was mailed a decision dismissing applicant's request under 37 CFR 1.43. Applicant was afforded two months in which to file any request for reconsideration.

On 10 September 2002, applicant filed the present renewed request under 37 CFR 1.43.

DISCUSSION

As stated in the decision mailed 15 August 2002, the declaration filed 05 June 2002 appeared to set forth the residence, post office address and country of citizenship for the legal representative, Claire HOOPER in the portion of the declaration provided for the incapacitated inventor, John RUSHBROOKE. Counsel has presently filed a signed statement that the "petitions attorney incorrectly concluded that the address in the declaration is that for Dr. Hooper, and not for Dr. Rushbrook." However, counsel has not certified that the citizenship listed on the filed declaration in the signature box for inventor RUSHBROOKE is indeed that of Mr. RUSHBROOKE.

CONCLUSION

Applicant's response of 10 September 2002 appears to be a bona fide response to the decision mailed 15 August 2002. Applicant is hereby accorded **ONE (1) MONTH** from the mail date of this decision or time remaining from the decision mailed 15 August 2002, which ever is greater, to either 1) confirm that the citizenship listed on the declaration filed 05 June 2002 under

Application No.: 10/018,387

inventor RUSHBROOKE is indeed that of Mr. RUSHBROOKE or 2) submit a new oath or declaration identifying the correct citizenship of the incapacitated inventor.

Any further correspondence with respect to this matter should be directed to the Assistant Commissioner for Patents, Box PCT, Washington, D.C. 20231, with the contents of the letter directed to the attention of the PCT Legal Office.

Boris Milef
Legal Examiner
PCT Legal Office

Derek A. Putonen
Petitions Attorney
PCT Legal Office
Tel: (703) 305-0130
Fax: (703) 308-6459

0 9 DEC 2002
UNITED STATES PATENT AND TRADEMARK OFFICE

#7

COMMISSIONER FOR PATENTS
UNITED STATES PATENT AND TRADEMARK OFFICE
WASHINGTON, D.C. 20231
www.uspto.gov

William M. Lee, Jr.
Lee, Mann, Smith, McWilliams, Sweeney & Ohlson
P.O. Box 2786
Chicago, IL 60690-2786

In re Application of	:	
RUSHBROOKE, et al.	:	
U.S. Application No.: 10/,018,387	:	DECISION ON PAPERS
PCT No.: PCT/GB00/01576	:	
Int. Filing Date: 20 April 2000	:	UNDER 37 CFR 1.43
Priority Date: 26 June 1999	:	
Attorney's Docket No.: 602-1551	:	
For: MICROPLATE READER	:	

This decision is in response to applicant's "Renewed Request Under 37 C.F.R. § 1.43" filed 18 November 2002 in the United States Patent and Trademark Office (USPTO).

BACKGROUND

On 25 October 2002, applicant was mailed a decision dismissing applicant's request under 37 CFR 1.43. Applicant was afforded one month in which to file any request for reconsideration.

On 18 November 2002, applicant filed the present renewed request under 37 CFR 1.43.

DISCUSSION

As stated in the decision mailed 25 October 2002, the signed statement filed by counsel on 10 September 2002 did not certify that the citizenship listed on the filed declaration in the signature box for inventor RUSHBROOKE is indeed that of Mr. RUSHBROOKE. Counsel has presently filed a statement to that effect. As such it is proper to grant applicant's petition at this time.

CONCLUSION

Applicant's renewed petition under 37 CFR 1.43 is **GRANTED**.

This application will be given an international application filing date of 20 April 2000 and a date of **05 June 2002** under 35 U.S.C. 371.

This application is being returned to the DO/EO/US for processing in accordance with this decision.

Boris Milef
Legal Examiner
PCT Legal Office

Derek A. Putonen
Petitions Attorney
PCT Legal Office
Tel: (703) 305-0130
Fax: (703) 308-6459

#13

UNITED STATES PATENT AND TRADEMARK OFFICE

Commissioner for Patents
United States Patent and Trademark Office
PO Box 1450
Alexandria, VA 22313-1450
www.uspto.gov

15 SEP 2003

John S. Pratt, Esq.
Kilpatrick Stockton LLP
1100 Peachtree Street, Suite 2800
Atlanta, GA 30309-454530

In re Application of	:	
Topaloglou et al.	:	
US Application No.: 10/018,461	:	DECISION ON PETITION
PCT Application No.: PCT/IB00/00863	:	UNDER 37 CFR 1.137(b)
International Filing Date: 28 June 2000	:	AND REQUEST UNDER
Priority Date: 29 June 1999	:	37 CFR 1.497(d)
Attorney's Docket No.: GLC0007-US	:	
For: BIOLOGICAL DATA PROCESSING	:	

This decision is in response to the petition to revive the above-referenced application under 37 CFR 1.137(b), filed on 09 June 2003; and the "Petition for Correction of Inventorship under 37 CFR 1.48(a)" filed on 16 December 2002, which is being properly treated as a request under 37 CFR 1.497(d). As discussed below, the §1.137(b) petition is **DISMISSED**, however, the §1.497(d) request is **GRANTED**.

BACKGROUND

On 28 June 2000, Applicant Thodoros TOPALOGLOU filed international application PCT/IB00/00863, which claimed priority of an earlier application filed on 29 June 1999. A copy of the international application was communicated from the International Bureau to the USPTO on 04 January 2001. A demand for international preliminary examination, in which the United States was elected, was filed on 28 January 2001, prior to 29 January 2001, the end of the 19-month period from the 29 June 1999 priority date. The period for paying the basic national fee is thus 30 months and ended at midnight on 29 December 2001.

On 19 December 2001, a transmittal letter for entry into the national stage in the United States (Form PTO-1390), along with, *inter alia*, a $430 check for payment toward the $445 basic national fee (small entity) required by 35 U.S.C. 371(c)(1) and 37 CFR 1.492(a)(5), an authorization for the USPTO to charge the $15 deficiency to Deposit Account No. 50-1458, and an unexecuted declaration identifying an additional inventor, Anthony KOSKY, without stating his country of citizenship.

On 08 March 2002, a "Notification of Missing Requirements under 37 CFR 371 in the United States Designated/Elected Office (DO/EO/US)" (Form PCT/DO/EO/905) was mailed, stating that the unexecuted declaration did not comply with 37 CFR 1.497(a) and (b), and

requesting submission of a proper oath or declaration within the later of 2 months from the mailing date of the notification (i.e., 08 May 2002), or, 32 months from the priority date (i.e., 28 February 2002). The reply period was extendable under 37 CFR 1.136(a). In other words, a proper response to the 08 March 2002 Notification of Missing Requirements must be filed, at the latest, on or before **08 October 2002** with the 5-month maximum extension of time and the requisite fee.

On 29 July 2002, 2 executed declarations, to be discussed below, were filed along with a request for a 3-month extension of time, the requisite extension-of-time fee, and the $65 surcharge (small entity) for lacking a proper declaration before commencement of the national stage. These declarations do not indicate Anthony KOSKY's country of citizenship.

On 14 November 2002, a "Notification of Defective Response" (Form PCT/DO/EO/916) was mailed, pointing out that the 29 July 2002 declarations indicate an additional inventor not identified in the published international application. This notification in effect required submission of an oath or declaration, in compliance with 37 CFR 1.497(a) and (b), within an unextendable 1 month of the mailing date of this notification (i.e., on or before **16 December 2002** (Monday)), since the maximum extendable reply period under the 08 March 2002 Notification of Missing Requirements had expired by then.

On 16 December 2002, a response was timely filed along with a petition to add Anthony KOSKY as an inventor. This petition did not enclose a supplemental declaration adding Anthony KOSKY's country of citizenship.

On 08 April 2003, a second "Notification of Defective Response" (Form PCT/DO/EO/916) was mailed, stating that the filed declarations did not identify Anthony KOSKY's country of citizenship. This second Form PCT/DO/EO/916 in effect requested submission of an oath or declaration, in compliance with 37 CFR 1.497(a) and (b), within an unextendable 1 month of the mailing date of this notification, i.e., on or before **08 May 2003**.

A response was not filed on or before 08 May 2003. The international application became abandoned as to the United States on 09 May 2003.

DISCUSSION

Petition under 37 CFR 1.137(b)

The petition encloses the $650 petition fee (small entity), and a statement to the effect that the entire delay in supplying an oath or declaration in compliance with 37 CFR 1.497(a) and (b) from its due date until the filing of the instant §1.137(b) petition was unintentional. In addition, a terminal disclaimer is not applicable in the instant case.

However, the supplemental declaration submitted with the instant petition, though identifying Anthony KOSKY's country of citizenship and signed by him, is nevertheless defective for showing Anthony KOSKY as the "sole or first inventor" without also listing Thodoros TOPALOGLOU as the joint inventor. 37 CFR 1.497(a)(3).

Consequently, the §1.137(b) petition is **DISMISSED** for lacking the "reply" required by 37 CFR 1.137(b)(1). MPEP 711.02(a) (Rev. 1, Feb. 2003).

Request under 37 CFR 1.497(d)

As stated above, the 19 December 2001 Form PTO-1390 was accompanied by a declaration that included a second inventor, Anthony KOSKY, not shown as an inventor in the published international application. The instant request specifically seeks to add Anthony KOSKY as an inventor for this application.

Under 37 CFR 1.497(d), an inventor may be added or deleted from the inventive entity named in the international application provided that an oath or declaration naming the new inventive entity is filed, accompanied by: (1) a statement from the person being added or deleted, that any error in inventorship in the international application occurred without deceptive intention on his/her part; (2) the processing fee set forth in 37 CFR 1.17(i); (3) the assignee's written consent, if an assignment has been executed by any of the original named-inventors.

The instant request encloses, *inter alia*:

(1) A statement from Anthony KOSKY that the error in omitting his name as an inventor from the international application occurred without deceptive intention on his part;

(2) The $130 processing fee; and

(3) A written consent by the assignee of record, along with a copy of the assignment evidencing this assignee's ownership of the entire interest in this application.

Moreover, 2 supplemental declarations were filed on 29 July 2002, each indicating both Thodoros TOPALOGLOU and Anthony KOSKY as inventors. Of the 2 supplemental declarations, 1 was signed by Thodoros TOPALOGLOU and the other by Anthony KOSKY.

The request under 37 CFR 1.497(d) is thus **GRANTED.** Anthony KOSKY is added as an inventor in this application.

CONCLUSION

The §1.137(b) petition is **DISMISSED without prejudice.** A renewed §1.137(b) petition must be filed within **TWO MONTHS** of the mailing date of this decision. The period is extendable under 37 CFR 1.136(a).

The §1.497(d) request to add a second inventor is **GRANTED.**

Any further correspondence should be addressed to:

Mail Stop PCT
Commissioner for Patents
Office of PCT Legal Administration
PO Box 1450
Alexandria, VA 22313-1450

Boris Milef
PCT Legal Examiner
PCT Legal Office

RC Tang
Petitions Attorney
PCT Legal Office
Telephone: 703-308-1315
Facsimile: 703-308-6459

05 JAN 2004

#15

UNITED STATES PATENT and TRADEMARK OFFICE

COMMISSIONER FOR PATENTS
UNITED STATES PATENT AND TRADEMARK OFFICE
P.O BOX 1450
ALEXANDRIA, VA 22313-1450
www.uspto.gov

John S. Pratt, Esq.
Kilpatrick Stockton LLP
1100 Peachtree Street, Suite 2800
Atlanta, GA 30309

In re Application of	:	
Topaloglou et al	:	DECISION ON
Application No.: 10/018,461	:	
PCT No.: PCT/IB00/00863	:	
Int. Filing Date: 28 June 2000	:	RENEWED PETITION
Priority Date: 29 June 1999	:	
Attorney's Docket No.: GLC0007-US	:	
For: BIOLOGICAL DATA PROCESSING	:	UNDER 37 CFR 1.137(b)

This decision is in response to applicants' "Renewed Petition For Revival Of An Application For Patent Abandoned Unintentionally Under 37 CFR 1.137(b)," filed on 14 October 2003.

BACKGROUND

In a decision from this Office on 15 September 2003, the petition filed on 09 June 2003 was dismissed. The decision stated that applicant's submitted declaration was defective because it showed Anthony KOSKY as the "sole or first inventor" without also listing Thodoros TOPALOGLOU as a joint inventor. 37 CFR 1.497(a)(3).

On 14 October 2003, applicants filed the instant renewed petition under 37 CFR 1.137(b).

DISCUSSION

A grantable petition to revive an abandoned application under 37 CFR 1.137(b) must be accompanied by (1) the required reply, unless previously filed. In a nonprovisional application abandoned for failure to prosecute, the required reply may be met by the filing of a continuing application; (2) the petition fee as set forth in § 1.17(m); and (3) a statement that the entire delay in filing the required reply from the due date for the reply until the filing of a grantable petition pursuant to this paragraph was unintentional. The Commissioner may require additional information where there is a question whether the delay was unintentional; and (4) any terminal disclaimer (and fee as set forth in § 1.20 (d)) required pursuant to paragraph (c) of this section.

Petitioner has provided: (1) the proper reply by submitting a proper declaration, (2) the petition fee set forth in §1.17(m) and (3) the proper statement under 137(b)(3). In this application, no terminal disclaimer is required.

Accordingly, the petition is deemed to satisfy requirements (1), (2), (3), and (4) under 37 CFR 1.137(b).

DECISION

The petition under 37 CFR 1.137(b) is **GRANTED**.

This application is being returned to the United States Designated/Elected Office (DO/EO/US) for continued processing. The 35 USC 371 date of this application is **14 October 2003.**

Rafael Bacares
PCT Legal Examiner
PCT Legal Office

Telephone: (703) 308-6312
Facsimile: (703) 308-6459

UNITED STATES PATENT AND TRADEMARK OFFICE

Commissioner for Patents
United States Patent and Trademark Office
P.O. Box 1450
Alexandria, VA 22313-1450
www.uspto.gov

MAIL

MAY 6 2005

DIRECTOR OFFICE
TECHNOLOGY CENTER 2600

Michael C Stuart
Cohen Pontani Lieberman & Pavane
551 Fifth Avenue
Suite 1210
New York NY 10176

In re Application of
Kimmo NARKILAHTI, et al.
Application No. 10/018,502
Filed: October 30, 2001
For: **METHOD AND SYSTEM FOR DETERMINING OF OPERATING MODELS OF USERS OF A TELECOMMUNICATION SYSTEM**

DECISION ON PETITION

This is a decision on the Petition to Withdraw Holding of Abandonment filed April 15, 2005 pursuant to 37 C.F.R. § 1.181(a).

The application was held abandoned for failure to respond in a timely manner and effective manner to the Office action mailed August 26, 2004. A Notice of Abandonment was mailed March 14, 2005.

Petitioner alleges to have timely filed a response to said Office action on February 28, 2005. In support thereof, Petitioner provided evidence in the way of a copy of the response filed February 28, 2005. The petition also includes a date stamped post card receipt itemizing the receipt of an amendment on February 28, 2005.

A review of the file records reveals that the original amendment filed on February 28, 2005 has been located and matched with the file.

In view of the above stated reason, the Notice of Abandonment is hereby vacated and the holding of abandonment withdrawn. Any inconvenience caused petitioner is regretted.

The petition is **GRANTED.**

The application file is being forwarded to the Technology Center's technical support staff for entry of the February 28, 2005 response. From there, the file will be forwarded to the examiner for further action in due course.

Kenneth A. Wieder
Special Program Examiner
Technology Center 2600
Communications

UNITED STATES PATENT AND TRADEMARK OFFICE

Commissioner for Patents
United States Patent and Trademark Office
P.O. Box 1450
Alexandria, VA 22313-1450
www.uspto.gov

August 16, 2006

FILE COPY

Patent No. : 7,041,799 B1
Ser. No. : 10/018529
Inventor(s) : Gawryl, et al.
Issued : May 9, 2006
Title : **PRESERVING A HEMOGLOBIN BLOOD SUBSTITUTE WITH A TRANSPARENT OVERWRAP**
Docket No. : 1161.1027-072

Re: Request for Certificate of Correction

Consideration has been given your request for the issuance of a certificate of correction for the above-identified patent under the provisions of Rule(s) 1.322 and/or 1.323.

Inspection of the patent application file reveals, that the alleged error(s) in **column 26**, **line 21**, the patent is printed in accordance with the record in the Patent and Trademark Office of the application as passed to issue by the examiner. Therefore, being no fault on the part of the Patent and Trademark Office, is has no authority to issue a certificate of correction under the provisions of 35 U.S.C. 254 and Rule 1.322 of the rules of Practice of the United States Patent and Trademark Office in Patent Cases.

The statutory fee for consideration of applicant's error(s), did not accompany your request under 37 CFR Rule 323. Therefore, before action may be taken on your request under the noted rule, the statutory fee of $100 will have to be submitted by you.

In view of the foregoing, your request is hereby denied.

Future correspondence concerning this matter should be filed and directed to Decisions & Certificates of Correction Branch.

Elisha Evans
For Cecelia Newman
Decisions & Certificates
of Correction Branch
(703) 308-9390 ext. 110 or (703) 308-8309

HAMILTON, BROOK, SMITH & REYNOLDS, P.C.
530 VIRGINIA ROAD
P.O. BOX 9133
CONCORD MA 01742-9133

03 APR 2003

UNITED STATES PATENT AND TRADEMARK OFFICE

COMMISSIONER FOR PATENTS
UNITED STATES PATENT AND TRADEMARK OFFICE
WASHINGTON, D.C. 20231
www.uspto.gov

William R. Majarian
GlaxoSmithKline Corporation
Corporate Intellectual Property - UW2220
P.O. Box 1539
King of Prussia, PA 19406-0939

In re Application of CAMILLERI, et al. Application No.: 10/018,547 PCT No.: PCT/GB00/02364 Int. Filing Date: 16 June 2000 Priority Date: 16 June 1999 Attorney Docket No.: P32328 For: NOVEL COMPOUNDS	DECISION ON PETITION UNDER 37 CFR 1.181

This decision is in response to applicant's "Petition Under 37 CFR §1.181(a) to Withdraw Holding of Abandonment" filed in the United States Patent and Trademark Office (USPTO) on 10 February 2003.

BACKGROUND

On 16 June 2000, applicant filed international application PCT/GB00/02364, which claimed priority of an earlier application filed 16 June 1999. A copy of the international application was communicated to the United States Patent and Trademark Office from the International Bureau on 21 December 2000. A Demand for international preliminary examination, in which the United States was elected, was filed on prior to the expiration of nineteen months from the priority date. Accordingly, the thirty-month period for paying the basic national fee in the United States expired at midnight on 16 December 2001.

On 12 December 2001, applicant filed a transmittal letter for entry into the national stage in the United States, which was accompanied by, *inter alia:* the requisite basic national fee as required by 35 U.S.C. 371(c)(1); an Information Disclosure Statement and a First Preliminary Amendment. A signed oath or declaration as required by 35 U.S.C. 371 (c)(4) was not filed.

On 26 February 2002, applicant was mailed a NOTIFICATION OF MISSING REQUIREMENTS UNDER 35 U.S.C. 371 (Form PCT/DO/EO/905) informing applicant of the need to provide a signed oath or declaration of the inventors, in compliance with 37 CFR 1.497(a) and (b), identifying the application by the International application number and international filing date and payment of the $130.00 surcharge for providing the executed oath or declaration later than thirty months from the priority date. Applicant was given two months to respond and advised that this time period could be extended with a proper petition and payment of fees.

On 06 January 2003, applicant was mailed a NOTIFICATION OF ABANDONMENT (Form PCT/DO/EO/909) informing applicant that the reply received on 12/12/2001 was improper and that the application was abandoned as to the United States.

On 10 February 2002, applicant responded with the present petition accompanied by an executed combined declaration and power of attorney; a copy of a return postcard, a copy of a previously filed transmittal letter and a copy of an Express Mail receipt.

DISCUSSION

The best evidence of what was actually received by the Office is a postcard receipt containing a specific itemization of all the items being submitted. See MPEP 503. Here, applicant has provided a copy of the date-stamped postcard receipt. The postcard identifies the application by applicant, title of invention, and the docket number. The receipt identifies the application number as "10,018,547." Among the items listed on the receipt is "Dec. & Power of Atty (3 pages.)" The receipt is stamped "533 Rec'd PCT/PTO 19 JUL 2002" across its face. Thus, it is clear that applicant filed an executed combined declaration and power of attorney on 19 July 2002. In addition, the postcard and transmittal letter authorize the deduction of appropriate funds from Deposit Account No.: 19-2570. As such, applicant's filing is considered to include a petition for a three-month extension of time accompanied by the appropriate petition fee. For the reasons stated above, it is proper to grant applicant's petition at this time and accept the copy of the combined declaration and power of attorney filed 10 February 2003 as a substitute for the combined declaration and power of attorney originally filed 19 July 2002. Further, a review of the application file reveals that all of the requirements of 35 U.S.C. 371 for entry into the national stage in the United States have now been satisfied.

CONCLUSION

For the reasons above, the petition under 37 CFR 1.181 is **GRANTED**.

As authorized $1050.00 will be deducted from Deposit Account No.: 19-2570 ($920.00 as payment of the three-month extension of time fee and $130.00 as payment of the surcharge for providing an executed oath or declaration of the inventors later than thirty months from the priority date.)

The "NOTIFICATION OF ABANDONMENT (Form PCT/DO/EO/909)" mailed on 06 January 2003 is hereby **VACATED**.

The application has an international filing date of 16 June 2000 under 35 U.S.C. 363 and will be given a date of **19 July 2002** under 35 U.S.C. 371(c).

This application is being returned to the United States Designated/Elected Office (DO/EO/US) for treatment in accordance with this decision.

Derek A. Putonen
Attorney Advisor
Office of PCT Legal Administration
Tel: (703) 305-0130
Fax: (703) 308-6459

07 MAR 2003

UNITED STATES PATENT AND TRADEMARK OFFICE

COMMISSIONER FOR PATENTS
UNITED STATES PATENT AND TRADEMARK OFFICE
WASHINGTON, D.C. 20231
www.uspto.gov

Thomas A. Ward
Fliesler Dubb Meyer and Lovejoy
Four Embarcadero Center-Suite 400
San Francisco, CA 94111-4156

In re Application of	:	DECISION
LEE	:	
Application No.: 10/018,549	:	
PCT No.: PCT/GB00/02267	:	
Int. Filing Date: 12 June 2000	:	
Priority Date: 14 June 1999	:	
Attorney Docket No.: ANRUK01000US0	:	
For: APPARATUS FOR TESTING MOBILE PHONES	:	

This is a decision on applicants' "REQUEST UNDER 37 CFR § 1.182 TO CORRECT SERIAL NUMBER ON PAPERS FILED" filed 06 February 2003 and "REQUEST TO ACCEPT LOST PAPER CONTAINING CERTIFICATE OF MAILING UNDER 37 C.F.R. §1.8(b)" filed 26 November 2002.

BACKGROUND

On 12 June 2000, applicants filed international application PCT/GB00/02267, which claimed a priority date of 14 June 1999. A copy of the international application was communicated to the United States Patent and Trademark Office (USPTO) from the International Bureau on 21 December 2000. A Demand for international preliminary examination, in which the United States was elected, was filed on 04 January 2001, prior to the expiration of nineteen months from the priority date. Accordingly, the thirty-month period for paying the basic national fee in the United States expired at midnight on 14 December 2001.

On 14 December 2001, applicants filed a Transmittal Letter (Form PTO-1390) for entry into the national stage under 35 U.S.C. 371 accompanied by, *inter alia*, the basic national fee, and the surcharge under 37 CFR 1.492(e) for providing the oath or declaration later than thirty months from the priority date.

On 20 March 2002, the United States Designated/Elected Office (DO/EO/US) mailed a NOTIFICATION OF MISSING REQUIREMENTS UNDER 35 U.S.C. 371 (Form PCT/DO/EO/905) indicating that an oath or declaration in compliance with 37 CFR 1.497(a)-(b) was required. The NOTIFICATION OF MISSING REQUIREMENTS set a two-month extendable time period.

On 26 November 2002, applicant submitted via facsimile transmission a "REQUEST TO ACCEPT LOST PAPER CONTAINING CERTIFICATE OF MAILING UNDER 37 C.F.R. §1.8(b)", which was accompanied by, *inter alia*, a declaration of inventors, a copy of the Assignment and the Assignment Recordation Form Cover Sheet, and a copy of an Information Disclosure Statement and references. The request asks that the papers accompanying the submission be accepted as having been received in the USPTO on 20 May 2002. This request has been treated as a petition under 37 CFR 1.181.

On 06 February 2003, applicant submitted via facsimile transmission a "REQUEST UNDER 37 C.F.R §1.182 TO CORRECT SERIAL NUMBER ON PAPERS FILED". The requisite petition fee has been paid.

DISCUSSION

Petition Under 37 CFR 1.181

The original application papers filed 20 May 2002 have been located. Accordingly, the petition under 37 CFR 1.181 is moot.

Petition Under 37 CFR 1.182

Applicant requests that the documents filed on 20 May 2002 which indicated the application number as 10/016,549 be accepted in application number 10/018,549. A review of the application file including counsel's statements in the present petition reveals that the indication of application number 10/016,549 was incorrect and that, on petition, the acceptance of these documents in the above-identified application is appropriate.

Regarding the assignment document, the fee has been charged but the assignment has not been recorded. Applicant must submit a new assignment document for recording. The fee paid on 20 May 2002 will be credited to Deposit Account 06-1325. Also, applicant included the surcharge under 37 CFR 1.492(e) for providing the oath or declaration later than thirty months from the priority date in the submission filed 20 May 2002. However, that fee was previously paid on 14 December 2001. Accordingly, Deposit Account 06-1325 will be credited this amount as well.

CONCLUSION

The petition under 37 CFR 1.181 is **DISMISSED** as **MOOT** for the reasons set forth above.

The petition under 37 CFR 1.182 is **GRANTED** for the reasons set forth above.

Please direct any further correspondence with respect to this matter to the Commissioner

of Patents and Trademarks, Box PCT, Washington, D.C. 20231, and address the contents of the letter to the attention of the Office of PCT Legal Administration.

This application is being forwarded to the National Stage Processing Branch of the Office of PCT Operations to continue national stage processing of the application including according the application a 35 U.S.C. 371(c) date of **20 May 2002**.

Daniel Stemmer
PCT Legal Examiner
PCT Legal Affairs
Office of Patent Cooperation Treaty
Legal Administration
Telephone: (703) 308-2066
Facsimile: (703) 308-6459

25 JUL 2002

UNITED STATES PATENT AND TRADEMARK OFFICE

#4

COMMISSIONER FOR PATENTS
UNITED STATES PATENT AND TRADEMARK OFFICE
WASHINGTON, D.C. 20231
www.uspto.gov

William C. Rowland
Burns, Doane, Swecker & Mathis, L.L.P.
P.O. Box 1404
Alexandria, Virginia 22313-1404

In re Application of	:	
PERSSON, et al.	:	
Application No.: 10/018,577	:	DECISION ON PETITION
PCT No.: PCT/SE00/01207	:	
Int. Filing Date: 09 June 2000	:	UNDER 37 CFR 1.181
Priority Date: 11 June 1999	:	
Attorney Docket No.: 000500-327	:	
For: THE USE OF MOISTURE IMPERVIOUS	:	
PACKAGING UNITS AND PACKAGE FOR	:	
ABSORBENT ARTICLES COMPRISING	:	
MOISTURE-SENSITIVE ADDITIVES	:	

This decision is in response to applicant's "Request to Withdraw The Holding of Abandonment" filed 12 March 2002. The request is being treated as a petition under 37 CFR 1.181. No petition fee is due.

BACKGROUND

On 09 June 2000, applicant filed international application PCT/SE00/01207, which claimed priority of an earlier application filed 11 June 1999. A copy of the international application was communicated to the United States Patent and Trademark Office from the International Bureau on 21 December 2000. A Demand for international preliminary examination, in which the United States was elected, was filed on prior to the expiration of nineteen months from the priority date. Accordingly, the thirty-month period for paying the basic national fee in the United States expired at midnight on 11 December 2001.

On 11 December 2001, applicant filed a transmittal letter for entry into the national stage in the United States, which was accompanied by, *inter alia:* the requisite basic national fee as required by 35 U.S.C. 371(c)(1); an unexecuted declaration of the inventors; a First Preliminary Amendment; an Information Disclosure Statement; an International Preliminary Examination Report and a copy of the International Search Report.

On 15 February 2002, applicant was mailed a "Notification of Abandonment" (Form PCT/DO/EO/909) informing applicant that the application was abandoned as to the United States for failure to pay the full, U.S. basic national fee within thirty months of the priority date.

On 12 March 2002, applicant filed the present petition accompanied by a stamped

postcard.

DISCUSSION

Applicant has provided a legible copy of the receipt postcard which shows a USPTO date stamp, "OIPE JC48 Patent and Trademark Office DEC 11 2001" and clearly identifies, "Check for $1,040.00" as well as listing applicant, application number and attorney docket number. The evidence is sufficient to establish that the application and payment of the full, U.S. basic national fee were received in the USPTO on 11 December 2001. As such, it is proper to **GRANT** applicant's petition at this time.

CONCLUSION

Applicant's petition under 37 CFR 1.181 is **GRANTED**.

The "Notification of Abandonment" (Form PCT/DO/EO/909) mailed 15 February 2002 is hereby **VACATED**.

This application is being returned to the United States Designated/Elected Office (US/DO/EO) for the issuance of a "Notification of Missing Requirements" (Form PCT/DO/EO/905) indicating that an executed declaration of the inventors and payment of the surcharge for providing an executed oath or declaration later than thirty months from the earliest claimed priority date are still required.

Richard Cole
Legal Examiner
PCT Legal Office

Derek A. Putonen
Petitions Attorney
PCT Legal Office
Tel: (703) 305-0130
Fax: (703) 308-6459

14 OCT 2003

#12

UNITED STATES PATENT AND TRADEMARK OFFICE

COMMISSIONER FOR PATENTS
UNITED STATES PATENT AND TRADEMARK OFFICE
P.O. BOX 1450
ALEXANDRIA, VA 22313-1450
www.uspto.gov

Stephan A Pendorf
Pendorf & Cutliff
PO Box 20445
Tampa, FL 33622-0445

In re Application of	:	
FRITZ et al.	:	
Application No.: 10/018,623	:	DECISION
PCT No.: PCT/EP00/05632	:	
Int. Filing Date: 19 June 2000	:	
Priority Date: 18 June 1999	:	
Attorney's Docket No.: 3993.003	:	
For: RADIATION SOURCE FOR	:	
ENDOVASCULAR RADIATION TREATMENT	:	

This decision is in response to applicant's "PETITION UNDER 37 C.F.R. §1.181 TO WITHDRAW A HOLDING OF ABANDONMENT AND, ALTERNATIVELY, PETITION UNDER 37 C.F.R. §1.137(b) TO REVIVE ABANDONED APPLICATION" filed on 08 April 2003.

BACKGROUND

On 19 June 2000, applicant filed international application PCT/EP00/05632, which designated the United States and claimed a priority date of 18 June 1999 (18 June 2000 was a Sunday). A copy of the international application was communicated to the United States Patent and Trademark Office from the International Bureau on 28 December 2000. A Demand for international preliminary examination, in which the United States was elected, was filed on 06 December 2000. Accordingly, the thirty-month period for paying the basic national fee in the United States expires at midnight on 18 December 2001.

On 18 December 2001, applicants filed, *inter alia*, a submission for entry into the national stage in the United States which was accompanied by, *inter alia*, an assertion of small entity status, the U.S. Basic National Fee for a small entity, and the surcharge for a small entity under 37 CFR 1.492(e) for providing the oath or declaration later than thirty months from the priority date.

On 21 February 2002, the United States Designated/Elected Office (DO/EO/US) mailed a NOTIFICATION OF MISSING REQUIREMENTS UNDER 35 U.S.C. 371 (FORM PCT/DO/EO/905) indicating, *inter alia*, that an oath or declaration of the inventors in compliance with 37 CFR 1.497(a)-(b) was required.

On 22 March 2002, applicants filed a "RESPONSE TO NOTIFICATION OF MISSING REQUIREMENTS UNDER 35 U.S.C. 371 IN THE UNITED STATES

DESIGNATED/ELECTED OFFICE", which was accompanied by an executed declaration of inventors.

On 04 April 2002, the DO/EO/US mailed a NOTICE OF ACCEPTANCE OF APPLICATION UNDER 35 U.S.C. 371 indicating a 35 U.S.C. 371(c) date of 22 March 2002.

On 08 April 2003, applicants filed the instant "PETITION UNDER 37 C.F.R. §1.181 TO WITHDRAW A HOLDING OF ABANDONMENT AND, ALTERNATIVELY, PETITION UNDER 37 C.F.R. §1.137(b) TO REVIVE ABANDONED APPLICATION," which was accompanied by, *inter alia*, a copy of a "RESPONSE TO NOTIFICATION OF MISSING REQUIREMENTS UNDER 35 U.S.C. 371 IN THE UNITED STATES DESIGNATED/ELECTED OFFICE", a copy of a declaration of inventors, a copy of a date-stamped postcard receipt, and a copy of a NOTIFICATION OF ABANDONMENT (FORM PCT/DO/EO/909).

DISCUSSION

The petition filed 08 April 2003 is directed to application number 10/018,623, titled "RADIATION SOURCE FOR ENDOVASCULAR TREATMENT", attorney docket number 3993.03, and inventors Eberhard Fritz and Gerd Phillipps.

The copy of the NOTIFICATION OF ABANDONMENT accompanying the petition filed 08 April 2003 indicates the application number as 10/018,619, the first-named applicant as Eberhard Fritz, the attorney docket number as 3993.003 and indicates a mailing date for a NOTIFICATION OF MISSING REQUIREMENTS as 15 February 2002. The copy of the "RESPONSE TO NOTIFICATION OF MISSING REQUIREMENTS UNDER 35 U.S.C. 371 IN THE UNITED STATES DESIGNATED/ELECTED OFFICE" filed 08 April 2003 contains the same identifying information as the petition but refers to a NOTIFICATION OF MISSING REQUIREMENTS mailed 21 February 2002.

The copy of the declaration of inventors filed 22 March 2002 identifies the application number as 10/018,623.

The postcard receipt date-stamped 22 March 2002 identifies the application number as 10/018,623, the inventors as E. Fritz and G. Phillips, the title as "RADIATION SOURCE FOR ENDOVASCULAR RADIATION TREATMENT", and the attorney docket number as 3993.03.

Petition Under 37 CFR 1.181

The petition under 37 CFR 1.181 is moot; as noted above, the submission filed 22 March 2002 was entered and processed in application number 10/018,623.

Petition Under 37 CFR 1.137(b)

The petition under 37 CFR 1.137(b) is also moot; application number 10/018,623 has not

yet gone abandoned.

If applicant intends to revive application number 10/018,619 (the application number on the copy of the NOTIFICATION OF ABANDONMENT accompanying the petition), a petition must be filed for that application which properly identifies that application. A comparison of the Transmittal Letter for 10/018,619 and the Transmittal Letter for 10/018,623 show that for the two applications, the title, inventors, and attorney docket number are the same. Given the situation, **applicants should use great care to indicate the correct application number as it is the only reliable indicator used by applicant which is different in the two applications.** (Applicant has indicated different dates in the indication for the identifier "Filed" for application number 10/018,623. For example, the "RESPONSE TO NOTIFICATION OF MISSING REQUIREMENTS UNDER 35 U.S.C. 371 IN THE UNITED STATES DESIGNATED/ELECTED OFFICE" filed 22 March 2002 indicates the application as having been filed on 17 December 2001. Note that this response seems to have been directed to the 10/018,623 application since it refers to the NOTIFICATION OF MISSING REQUIREMENTS mailed 21 February 2002. The Information Disclosure Statement filed 30 May 2002 in application number 10/018,623 indicates the application as having been filed on 18 December 2001. Thus, the "Filed" field is not a reliable indicator.)

The declaration of inventors filed 22 March 2002 is not in compliance with 37 CFR 1.497(a)-(b) because it fails to properly identify the application being executed. The declaration identifies the application being executed as 10/018,623 filed 17 December 2001. However, the request to enter the national stage for application 10/018,623 was filed 18 December 2001. Accordingly, the requirements of 35 U.S.C. 371(c) for entry into the national stage in the United States of America were not completed as of the 35 U.S.C. 102(e) and 371 dates indicated in the NOTIFICATION OF ACCEPTANCE mailed 04 April 2002. Accordingly, the 04 April 2002 NOTIFICATION OF ACCEPTANCE is hereby VACATED. (Also, the declaration filed 22 March 2002 includes a claim to a European priority application 9911099.0 filed 18 June 1999. However, the PCT application which application number 10/018,623 is a national stage of claims priority to European priority application 99111100.6 filed 18 June 1999.)

CONCLUSION

For the reasons set forth above, the petition under 37 CFR 1.181 is **DISMISSED** as **MOOT**.

For the reasons set forth above, the petition under 37 CFR 1.137(b) is also **DISMISSED** as **MOOT**.

Applicants are required to file in application number 10/018,623 a declaration of inventors in compliance with 37 CFR 1.497(a)-(b) within **ONE (1) MONTH** from the date of mailing of this decision. *Failure to timely file a proper reply will result in abandonment of the application.* **Note that the Final Office Action mailed 03 June 2003 remains in effect.** Consequently, two

time periods are running against the above-mentioned application. See MPEP § 710.04.

Any further correspondence with respect to this matter should be addressed to the Assistant Commissioner for Patents, Box PCT, Washington, D.C. 20231, with the contents of the letter marked to the attention of the Office of PCT Legal Administration.

This application is being forwarded to Art Unit 3736 for consideration of the proposed After Final Amendment filed 05 September 2003.

Daniel Stemmer
PCT Legal Examiner
PCT Legal Affairs
Office of Patent Cooperation Treaty
Legal Administration
Telephone: (703) 308-2066
Facsimile: (703) 308-6459

UNITED STATES PATENT AND TRADEMARK OFFICE

COMMISSIONER FOR PATENTS
UNITED STATES PATENT AND TRADEMARK OFFICE
P.O. BOX 1450
ALEXANDRIA, VA 22313-1450
www.uspto.gov

AKERMAN SENTERFITT
P.O. BOX 3188
WEST PALM BEACH, FL 33402-3188

COPY MAILED

MAY 09 2007

OFFICE OF PETITIONS

In re Application of	:	
Eberhard, Fritz, et al.	:	
Application No. 10/018,623	:	DECISION ON PETITION
Filed: March 22, 2002	:	
Attorney Docket No. 3993-002	:	

This is a decision on the petition, filed December 21, 2006, which is being treated as a petition under 37 CFR 1.8(b), requesting withdrawal of the holding of abandonment in the above-identified application.

The petition is **GRANTED**.

This application was held abandoned for failure to timely respond to a Notice of Allowance and Fees Due on or before May 10, 2006. A Notice of Abandonment was mailed on August 3, 2006. In response, on December 21, 2006, the present petition was filed. While petitioner request that the abandonment be withdrawn, a petition under 37 CFR 1.137(b) was also filed.

Petitioner indicates that the issue fee was timely filed using a certificate of mailing dated May 10, 2006. In support petitioner provides a copy of the Issue Fee transmittal letter, which bears a certificate of mailing dated May 10, 2006, and a copy of the facsimile transmission receipt therefor.

The file record does not include the originally submitted paper. Failure to receive correspondence which includes a certificate of mailing or certificate of facsimile transmission is addressed in 37 CFR 1.8(b), reproduced below:

> In the event that correspondence is considered timely filed by being mailed or transmitted in accordance with paragraph (a) of this section, but not received in the U.S. Patent and Trademark Office after a reasonable amount of time

has elapsed from the time of mailing or transmitting of the correspondence, or after the application is held to be abandoned, or after the proceeding is dismissed, terminated, or decided with prejudice, the correspondence will be considered timely if the party who forwarded such correspondence:

(1) Informs the Office of the previous mailing or transmission of the correspondence promptly after becoming aware that the Office has no evidence of receipt of the correspondence;

(2) Supplies an additional copy of the previously mailed or transmitted correspondence and certificate; and

(3) Includes a statement which attests on a personal knowledge basis or to the satisfaction of the Director to the previous timely mailing or transmission. If the correspondence was sent by facsimile transmission, a copy of the sending unit's report confirming transmission may be used to support this statement.

The petition satisfies the above requirements of 37 CFR 1.8(b). Accordingly, the holding of abandonment for failure to timely file a reply to the Notice of Allowance and Fee Due is hereby withdrawn and the application restored to pending status.

The petition under 1.137(b) is dismissed as moot. Under the circumstance, no petition fee was charged to counsel's deposit account.

The copy of the reply received with the petition will be accepted in place of the reply shown to have transmitted by facsimile on May 10, 2006.

The application is being referred to the Office of Publications to be processed into a patent.

Telephone inquires related to this decision should be directed to the undersigned at (571) 272-3204. Telephone inquiries related to processing at Publishing Division should be directed to (571) 272-4200.

Sherry D. Brinkley
Petitions Examiner
Office of Petitions

UNITED STATES PATENT AND TRADEMARK OFFICE

COMMISSIONER FOR PATENTS
UNITED STATES PATENT AND TRADEMARK OFFICE
P.O. BOX 1450
ALEXANDRIA, VA 22313-1450
www.uspto.gov

Paper No. 16

Basf Corporation
Patent Department
1419 Biddle Avenue
Wyandotte, MI 48192-3736

COPY MAILED

NOV 0 6 2003

OFFICE OF PETITIONS

In re Application of
Reif et al.
Application No. 10/018,636
Filed: December 13, 2001
Attorney Docket No. IN-12101

DECISION ON PETITION

This is a decision on the "PETITION FOR REVIVAL OF AN APPLICATION FOR PATENT ABANDONED UNINTENTIONALLY UNDER 37 CFR 1.137(b)," filed September 2, 2003 in the above-identified application.

For the reasons set forth herein, the petition under § 1.137(b) is **GRANTED**.

The above-identified application became abandoned for failure to file a timely and proper reply to the final Office action mailed February 25, 2003. This Office action set forth a shortened statutory period for reply of three (3) months, with extensions of time obtainable under § 1.136(a). On April 30, 2003, applicants filed an amendment. On May 12, 2003, applicants filed a supplemental amendment. However, these amendments were determined by the examiner not to place the application in condition for allowance (Advisory Action mailed May 25, 2003). No proper reply having been filed and no extensions of time obtained, the above-identified application became abandoned effective August 26, 2003. The present petition precedes the mailing of a Notice of Abandonment.

The instant petition includes the required reply in the form of the filing of a Notice of Appeal (and appeal fee); payment of the petition fee; and a statement that the "entire delay in filing the required reply from the due date for the reply until the filing of a grantable petition pursuant to this paragraph was unintentional." No terminal disclaimer is required on petition.

A petition for three-month extension of time (and fee) accompanied the instant petition. However, an extension of time under 37 CFR 1.136 must be filed prior to the expiration of the maximum extendable period for reply. See In re Application of S., 8 USPQ2d 1630, 1631 (Comm'r Pats. 1988). Accordingly, since the $930.00 extension of time submitted with the petition on September 2, 2003 was subsequent to the maximum extendable period for reply, this fee is unnecessary and will be credited to petitioner's deposit account.

The application file is being forwarded to Technology Center 1621 in light of the filing of the Notice of Appeal.

Telephone inquiries regarding this decision should be directed to the undersigned at (703) 305-0309.

Nancy Johnson
Senior Petitions Attorney
Office of Petitions

UNITED STATES PATENT AND TRADEMARK OFFICE

COMMISSIONER FOR PATENTS
UNITED STATES PATENT AND TRADEMARK OFFICE
P.O. BOX 1450
ALEXANDRIA, VA 22313-1450
www.uspto.gov

Paper No. 17

Basf Corporation
Patent Department
1419 Biddle Avenue
Wyandotte, MI 48192-3736

COPY MAILED

DEC 1 2 2003

OFFICE OF PETITIONS

In re Application of
Reif et al. :
Application No. 10/018,636 :
Filed: December 13, 2001 :
Attorney Docket No. IN-12101 :

CORRECTED DECISION ON PETITION

This is a decision on the "PETITION FOR REVIVAL OF AN APPLICATION FOR PATENT ABANDONED UNINTENTIONALLY UNDER 37 CFR 1.137(b)," filed September 2, 2003 in the above-identified application.

For the reasons set forth herein, the petition under § 1.137(b) is **GRANTED**.

The above-identified application became abandoned for failure to file a timely and proper reply to the final Office action mailed February 25, 2003. This Office action set forth a shortened statutory period for reply of three (3) months, with extensions of time obtainable under § 1.136(a). On April 30, 2003, applicants filed an amendment. On May 12, 2003, applicants filed a supplemental amendment. However, these amendments were determined by the examiner not to place the application in condition for allowance (Advisory Action mailed May 25, 2003). No proper reply having been filed and no extensions of time obtained, the above-identified application became abandoned effective August 26, 2003. The present petition precedes the mailing of a Notice of Abandonment.

The instant petition includes the required reply in the form of the filing of a Notice of Appeal (and appeal fee); payment of the petition fee; and a statement that the "entire delay in filing the required reply from the due date for the reply until the filing of a grantable petition pursuant to this paragraph was unintentional." No terminal disclaimer is required on petition.

The two-month period for filing an appeal brief in triplicate (accompanied by the fee required by 37 CFR 1.17(c)), runs from the date of this decision.

A petition for three-month extension of time (and fee) accompanied the instant petition. However, an extension of time under 37 CFR 1.136 must be filed prior to the expiration of the maximum extendable period for reply. See In re Application of S., 8 USPQ2d 1630, 1631 (Comm'r Pats. 1988). Accordingly, since the $930.00 extension of time submitted with the petition on September 2, 2003 was subsequent to the maximum extendable period

for reply, this fee is unnecessary and will be credited to petitioner's deposit account.

The application file is being forwarded to Technology Center 1621 in light of the filing of the Notice of Appeal.

Telephone inquiries regarding this decision should be directed to the undersigned at (703) 305-0309.

Nancy Johnson
Senior Petitions Attorney
Office of Petitions

SPE RESPONSE FOR CERTIFICATE OF CORRECTION

Paper No.: X

DATE : **September 18,2007**

TO SPE OF : ART UNIT **1636**

SUBJECT : Request for Certificate of Correction for Appl. No.: **10/018,638** Patent No.: **7227013 B1**

A response is requested with respect to a request for a certificate of correction.

With respect to the change(s) requested to correct Office and/or Applicant's errors, should the patent read as shown in the certificate of correction attached herewith or the COCIN document(s), in IFW images for the above-identified patented application? No new matter should be introduced, nor should the scope or meaning of the claims be changed.

If the response is for an IFW, within **7** days, please complete and forward the response, to the employee (named below) via scanning into application images, using document code **COCX**.

DO NOT SENT TO ATTORNEY

If the response is for a paper file wrapper, please complete the response and forward the response with the paper file wrapper, to the employee (named below), within **7** days, to:

Certificates of Correction Branch (CofC)
South Tower - 9A22
Palm Location 7580

LAMONTE NEWSOME
Certificates of Correction Branch
703-308-9390 ext. 112

Thank You For Your Assistance

The request for issuing the above-identified correction(s) is hereby:
Note your decision on the appropriate box.

- ☒ **Approved** — **All** changes apply.
- ☐ **Approved in Part** — Specify below which changes **do not** apply.
- ☐ **Denied** — State the reasons for denial below.

Comments: Okay to enter since document is US Provisional and consistent with PCT Filing

Joe Woitach
SPE

1636
Art Unit

23 AUG 2004

#6

UNITED STATES PATENT AND TRADEMARK OFFICE

COMMISSIONER FOR PATENTS
UNITED STATES PATENT AND TRADEMARK OFFICE
P.O. BOX 1450
ALEXANDRIA, VA 22313-1450
www.uspto.gov

Charles R Hoffmann
Hoffmann & Baron
6900 Jericho Turnpike
Syosset NY 11791

In re Application of	:	
RANKÓ et al.	:	
Application No.: 10/018,639	:	DECISION
PCT No.: PCT/EP01/04776	:	
Int. Filing Date: 27 April 2001	:	
Priority Date: 03 May 2000	:	
Attorney's Docket No.: 442-134 PCT/US	:	
For: CONNECTING DEVICE FOR FLUIDS	:	

This decision is in response to applicant's "PETITION UNDER 37 C.F.R. 1.181 TO WITHDRAW HOLDING OF ABANDONMENT-OFFICE ACTION NOT RECEIVED" filed 15 March 2004.

BACKGROUND

On 27 April 2001, applicant filed international application PCT/EP01/04776, which designated the United States and claimed a priority date of 03 May 2000. A copy of the international application was communicated to the United States Patent and Trademark Office from the International Bureau on 08 November 2001. The twenty-month period for paying the basic national fee in the United States expires at midnight on 03 January 2002.

On 19 December 2001, applicants filed a submission for entry into the national stage in the United States which was accompanied by, *inter alia*, the U.S. Basic National Fee.

On 06 February 2002, the United States Designated/Elected Office (DO/EO/US) mailed a NOTIFICATION OF MISSING REQUIREMENTS UNDER 35 U.S.C. 371 (FORM PCT/DO/EO/905) indicating, *inter alia*, that an oath or declaration of the inventors in compliance with 37 CFR 1.497(a)-(b) was required.

On 01 March 2004, the DO/EO/US mailed a NOTICE OF ABANDONMENT indicating that the application was abandoned for failure to timely respond to the Notification mailed 06 February 2002.

On 15 March 2004, applicants filed the instant "PETITION UNDER 37 C.F.R. 1.181 TO WITHDRAW HOLDING OF ABANDONMENT-OFFICE ACTION NOT RECEIVED", which was accompanied by, *inter alia*, a declaration of inventors, an incoming mail log list from 06

February 2002 to 08 March 2002, a computer generated docket page for Hoffmann & Baron File No. 442-134 PCT/US, and a hand-written docket sheet for 06 April 2002.

DISCUSSION

If applicants can establish nonreceipt of the NOTIFICATION OF MISSING REQUIREMENTS, then the application was never abandoned. In such case, the holding of abandonment will be withdrawn pursuant to 37 CFR 1.181. See MPEP § 711.03(c), para. I.A. The showing must include: (1) a statement by the practitioner that the Office action was not received by the practitioner; (2) a statement attesting that a search of the file jacket and docket records indicates that the Office action was not received; and (3) a copy of the docket record where the non-received Office action would have been entered had it been received (the docket record must also be referenced in practitioner's statement).

As to (1), practitioner states that "Applicants hereby state that the subject Notification was not received by Applicants' attorneys of record". However, this is not a statement by the practitioner that the Office action was not received by the practitioner. Thus, item (1) has not been met.

As to (2), practitioner states that "Applicants' attorneys have searched through the contents of the file jacket of Hoffmann & Baron File No. 442-134 PCT/US, pertaining to the above-identified patent application, and I have not found the subject Notification dated February 6, 2002" and that "no docketing entries were made with respect to Hoffmann & Baron File No. 442-134 PCT/US". These statements are construed as meaning that a search of the file jacket and docket records indicates that the Office action was not received. If this interpretation is incorrect, practitioner must notify the Office of PCT Legal Affairs immediately. Accordingly, item (2) has been satisfied.

As to (3), applicants have provided a copy of the docket records for the date on which the response was due (06 April 2002) showing all cases for the practitioner's law firm that had a response due on that date. This docket record is also referenced in practitioner's statement. Accordingly, item (3) has been satisfied.

Declaration of Inventors

The declaration of inventors filed 15 March 2004 is not in compliance with 37 CFR 1.497(a)-(b). The international application lists the first named inventor as Dezs Rankó while the declaration of inventors filed 15 March 2004 lists the first named inventor as Dezső Rankó.

CONCLUSION

For the reasons set forth above, the petition under 37 CFR 1.181 is **DISMISSED** without prejudice.

As indicated in the NOTICE OF ABANDONMENT mailed 01 March 2004, the

application is abandoned as to the United States of America.

Applicant is hereby given the time limit of **TWO (2) MONTHS** from the mail date of this communication in order to file a proper response. Regarding the name of Mr. Rankó, a proper response would be a new oath(s) or declaration(s) properly identifying the inventor and signed by the inventor, or an acceptable explanation of any typographical or transliteration error in the middle name of the inventor as indicated in the international application if this is the case, or a petition under 37 CFR 1.182 (see MPEP § 605.04(c)) if the inventor has changed his name, or a petition under 37 CFR 1.497(d) if a change of inventorship is being made from the inventorship of the application as indicated in the international application. Extensions of time under 37 CFR 1.136(a) are available.

Any further correspondence with respect to this matter should be addressed to the Assistant Commissioner for Patents, Box PCT, Washington, D.C. 20231, with the contents of the letter marked to the attention of the Office of PCT Legal Administration.

Daniel Stemmer
PCT Legal Examiner
PCT Legal Affairs
Office of Patent Cooperation Treaty
Legal Administration
Telephone: (703) 308-2066
Facsimile: (703) 308-6459

3 0 NOV 2004

#8

UNITED STATES PATENT AND TRADEMARK OFFICE

COMMISSIONER FOR PATENTS
UNITED STATES PATENT AND TRADEMARK OFFICE
P.O. BOX 1450
ALEXANDRIA, VA 22313-1450
www.uspto.gov

Charles R Hoffmann
Hoffmann & Baron
6900 Jericho Turnpike
Syosset NY 11791

In re Application of	:	
DEZSO et al.	:	
Application No.: 10/018,639	:	DECISION
PCT No.: PCT/EP01/04776	:	
Int. Filing Date: 27 April 2001	:	
Priority Date: 03 May 2000	:	
Attorney's Docket No.: 442-134 PCT/US	:	
For: CONNECTING DEVICE FOR FLUIDS	:	

This decision is in response to applicant's "REQUEST FOR RECONSIDERATION OF PETITION UNDER 37 CFR § 1.181" filed 15 September 2004.

BACKGROUND

On 27 April 2001, applicant filed international application PCT/EP01/04776, which designated the United States and claimed a priority date of 03 May 2000. A copy of the international application was communicated to the United States Patent and Trademark Office from the International Bureau on 08 November 2001. The twenty-month period for paying the basic national fee in the United States expires at midnight on 03 January 2002.

On 19 December 2001, applicants filed a submission for entry into the national stage in the United States which was accompanied by, *inter alia*, the U.S. Basic National Fee.

On 06 February 2002, the United States Designated/Elected Office (DO/EO/US) mailed a NOTIFICATION OF MISSING REQUIREMENTS UNDER 35 U.S.C. 371 (FORM PCT/DO/EO/905) indicating, *inter alia*, that an oath or declaration of the inventors in compliance with 37 CFR 1.497(a)-(b) was required.

On 01 March 2004, the DO/EO/US mailed a NOTICE OF ABANDONMENT indicating that the application was abandoned for failure to timely respond to the Notification mailed 06 February 2002.

On 15 March 2004, applicants filed the instant "PETITION UNDER 37 C.F.R. 1.181 TO WITHDRAW HOLDING OF ABANDONMENT-OFFICE ACTION NOT RECEIVED", which was accompanied by, *inter alia*, a declaration of inventors, an incoming mail log list from 06 February 2002 to 08 March 2002, a computer generated docket page for Hoffmann & Baron File

No. 442-134 PCT/US, and a hand-written docket sheet for 06 April 2002.

On 23 August 2004, a decision was mailed dismissing applicants' petition under 37 CFR 1.181 for failure to provide a statement by the practitioner that the Office action was not received by the practitioner. The decision also noted that the declaration of inventors filed 15 March 2004 was not in compliance with 37 CFR 1.497(a)-(b) because the international application listed the first named inventor as Dezs Ranko while the declaration of inventors filed 15 March 2004 listed the first named inventor as Dezso Ranko.

On 15 September 2004, applicants submitted the instant "REQUEST FOR RECONSIDERATION OF PETITION UNDER 37 CFR § 1.181".

DISCUSSION

If applicants can establish nonreceipt of the NOTIFICATION OF MISSING REQUIREMENTS, then the application was never abandoned. In such case, the holding of abandonment will be withdrawn pursuant to 37 CFR 1.181. See MPEP § 711.03(c), para. I.A. The showing must include: (1) a statement by the practitioner that the Office action was not received by the practitioner; (2) a statement attesting that a search of the file jacket and docket records indicates that the Office action was not received; and (3) a copy of the docket record where the non-received Office action would have been entered had it been received (the docket record must also be referenced in practitioner's statement).

As noted in the decision mailed 23 August 2004, items (2) and (3) have been met.

As to (1), practitioner has provided the required statement in the submission filed 15 September 2004.

Declaration of Inventors

Regarding the difference in names of the first-named inventor in the international application and the declaration of inventors, the response filed 15 September 2004 indicates that the correct name of the first named inventor is **Ranko Dezso** (rather than Dezso Ranko as suggested in the decision mailed 23 August 2004) as indicated in the declaration of inventors filed 15 March 2004 rather than Dezs Ranko as indicated in the international application. The response explains that the international application contained an incorrect spelling concerning the name of Mr. Dezso and transposed Mr. Dezso's first and last names.

Applicants' explanation of the difference in the name of Mr. Dezso is accepted and noted for the record.

As to the name of the second-named inventor, applicant has not provided an explanation as to why the declaration of inventors filed 15 March 2004 indicates the name as Jozsef Istvan while the international application indicates the name as Istvan Jozsef. However, it has been

construed that the correct name of the inventor is Jozsef Istvan and that the international application transposed Mr. Istvan's first and last names. If this interpretation of the correct name of the inventor and/or the reason why this is the correct name of the inventor are/is incorrect, applicant is required to notify the Office of PCT Legal Affairs *immediately*.

The response filed 15 September 2004 is a proper reply to the decision mailed 23 August 2004. The declaration of inventors filed 15 March 2004 is in compliance with 37 CFR 1.497(a)-(b).

CONCLUSION

For the reasons set forth above, the petition under 37 CFR 1.181 is **GRANTED**.

Any further correspondence with respect to this matter should be addressed to the Assistant Commissioner for Patents, Box PCT, Washington, D.C. 20231, with the contents of the letter marked to the attention of the Office of PCT Legal Administration.

This application is being forwarded to the National Stage Processing Branch of the Office of PCT Operations to continue national stage processing of the application including (1) correction of the applicant's name in PALM from Ranko, Dezs to **DEZSO, Ranko** and indicating the second-named inventor as **ISTVAN, Jozsef** and (2) according the application a 35 U.S.C. 371(c)(1), (c)(2), and (c)(4) date of **15 March 2004**.

Daniel Stemmer
PCT Legal Examiner
PCT Legal Affairs
Office of Patent Cooperation Treaty
Legal Administration
Telephone: (703) 308-2066
Facsimile: (703) 308-6459

UNITED STATES PATENT AND TRADEMARK OFFICE

Commissioner for Patents
United States Patent and Trademark Office
P.O. Box 1450
Alexandria, VA 22313-1450
www.uspto.gov

STRIKER STRIKER & STENBY
103 EAST NECK ROAD
HUNTINGTON, NY 11743

COPY MAILED

MAR 0 9 2005

OFFICE OF PETITIONS

In re Application of	:	
Wilfried Merkel et al	:	
Application No. 10/018,651	:	DECISION ON PETITION
Filed: March 1, 2002	:	UNDER 37 CFR 1.78(a)(3)
Attorney Docket No. 1914		

This is a decision on the petition under 37 CFR 1.78(a)(3), filed September 23, 2004, to accept an unintentionally delayed claim under 35 U.S.C. § 120 for the benefit of priority to the prior-filed nonprovisional application.

The petition is **DISMISSED**.

A petition for acceptance of a claim for late priority under 37 CFR 1.78(a)(3) is only applicable to those applications filed on or after November 29, 2000. Further, the petition is appropriate only after the expiration of the period specified in 37 CFR 1.78(a)(2)(ii). In addition, the petition under 37 CFR 1.78(a)(3) must be accompanied by:

> **(1)** the reference required by 35 U.S.C. § 120 and 37 CFR 1.78(a)(2)(i) of the prior-filed application, unless previously submitted;
> **(2)** the surcharge set forth in § 1.17(t); and
> **(3)** a statement that the entire delay between the date the claim was due under 37 CFR 1.78(a)(2)(ii) and the date the claim was filed was unintentional. The Commissioner may require additional information where there is a question whether the delay was unintentional.

The instant petition does not comply with item (1) above.

37 CFR 1.78(a)(2)(i) requires that any nonprovisional application claiming the benefit of one or more prior-filed copending nonprovisional applications must contain or be amended to contain a reference to each such prior-filed application, identifying it by application number (consisting of the series code and serial number) and indicating the relationship of the applications. The relationship between the applications is whether the subject application is a continuation, divisional, or continuation-in-part of a prior-filed nonprovisional application. An example of a proper benefit claim is: "This application is a continuation of Application No. 10/---, filed---." A benefit claim that merely states: "This application claims the benefit of Application No. 10/---, filed---," does not comply with 37 CFR 1.72(a)(2)(i) since the proper relationship, which includes the type of continuing application, is not stated. Also, the status of each nonprovisional

parent application (if it is patented or abandoned) should also be indicated, following the filing date of the parent nonprovisional application. See Manual of Patent Examining Procedure, 8th ed., (August 2001), Section 201.11, Reference to First Application. No amendment was received to clearly state the relationship of the prior-filed application to the instant application.

Accordingly, before the petition under 37 CFR § 1.78(a)(3) can be granted, a renewed petition under 37 CFR § 1.78(a)(3) and a substitute amendment[1] which sets forth the relationship of the prior-filed application(s) is required.

37 CFR § 1.78(a)(3) requires a statement that the entire delay between the date the claim was due under 37 CFR § 1.78(a)(2)(ii) and the date the claim was filed was unintentional. Since the statement contained in the instant petition varies from the language required by 37 CFR 1.78(a)(3), the statement contained in the instant petition is being construed as the statement required by 37 CFR 1.78(a)(3).

Further correspondence with respect to this matter should be addressed as follows:

By mail: Mail Stop PETITIONS
Commissioner for Patents
Post Office Box 1450
Alexandria, VA 22313-1450

By hand: Customer Service Window
Randolph Building
401 Dulany Street
Alexandria, VA 22314

By fax: (703) 872-9306
ATTN: Office of Petitions

Telephone inquiries concerning this decision should be directed to Irvin Dingle at (571) 272-3210.

Frances Hicks

Frances Hicks
Lead Petitions Examiner
Office of Petitions
Office of the Deputy Commissioner
for Patent Examination Policy

---

[1] *Note* 37 CFR 1.121

UNITED STATES PATENT AND TRADEMARK OFFICE

Commissioner for Patents
United States Patent and Trademark Office
P.O. Box 1450
Alexandria, VA 22313-1450
www.uspto.gov

STRIKER STRIKER & STENBY
103 EAST NECK ROAD
HUNTINGTON, NY 11743

COPY MAILED

NOV 02 2005

OFFICE OF PETITIONS

In re Application of	:	
Wilfreid W. Merkel et al	:	
Application No. 10/018,651	:	DECISION ON PETITION
Filed: March 1, 2002	:	UNDER 37 CFR 1.78(a)(3)
Attorney Docket No. 1914		

This is a decision on the renewed petition filed March 28, 2005 under 37 CFR 1.78(a)(3), to accept an unintentionally delayed claim under 35 U.S.C. § 120 for the benefit of priority to prior-filed nonprovisional Application No. 09/284,399, as set forth in the concurrently filed amendment.[1]

The petition is **GRANTED**.

A petition for acceptance of a claim for late priority under 37 CFR 1.78(a)(3) is only applicable to those applications filed on or after November 29, 2000. Further, the petition is appropriate only after the expiration of the period specified in 37 CFR 1.78(a)(2)(ii). In addition, the petition under 37 CFR 1.78(a)(3) must be accompanied by:

> **(1)** the reference required by 35 U.S.C. § 120 and 37 CFR 1.78(a)(2)(i) of the prior-filed application, unless previously submitted;
> **(2)** the surcharge set forth in § 1.17(t); and
> **(3)** a statement that the entire delay between the date the claim was due under 37 CFR 1.78(a)(2)(ii) and the date the claim was filed was unintentional. The Commissioner may require additional information where there is a question whether the delay was unintentional.

The instant pending application was filed on March 1, 2002, and was pending at the time of filing of the instant petition. A reference to the above-noted prior-filed nonprovisional application has been included in an amendment to the first sentence of the specification following the title as required by 37 CFR 1.78(a)(2)(iii).

---

[1] Note 37 CFR 1.4(c).

The instant nonprovisional application was filed after November 29, 2000, and the claim herein for the benefit of priority to the prior-filed nonprovisional application is submitted after expiration of the period specified in 37 CFR 1.78(a)(2)(ii). Also, the reference to the prior-filed nonprovisional application was submitted during the pendency of the instant nonprovisional application, for which the claim for benefit of priority is sought. *See* 35 U.S.C. § 120. Accordingly, having found that the instant petition for acceptance of an unintentionally delayed claim for the benefit of priority under 35 U.S.C. § 120 to the prior-filed nonprovisional application satisfies the conditions of 37 CFR 1.78(a)(3), the petition is granted.

The granting of the petition to accept the delayed benefit claim to the prior-filed application under 37 CFR 1.78(a)(3) should not be construed as meaning that the instant application is entitled to the benefit of the prior-filed application. In order for the instant application to be entitled to the benefit of the prior-filed application, all other requirements under 35 U.S.C. § 120 and 37 CFR 1.78(a)(1) and (a)(2) must be met. Similarly, the fact that the corrected Filing Receipt accompanying this decision on petition includes the prior-filed application should not be construed as meaning that applicant is entitled to the claim for benefit of priority to the prior-filed application noted thereon. Accordingly, the examiner will, in due course, consider this benefit claim and determine whether the instant application is entitled to the benefit of the earlier filing date.

Any inquiries concerning this decision may be directed to Irvin Dingle at (571) 272-3210.

This matter is being referred to Technology Center Art Unit 1744.

Frances Hicks

Frances Hicks
Petitions Examiner
Office of Petitions

Attachment: Corrected Filing Receipt

UNITED STATES PATENT AND TRADEMARK OFFICE

COMMISSIONER FOR PATENTS
UNITED STATES PATENT AND TRADEMARK OFFICE
P.O. BOX 1450
ALEXANDRIA, VA 22313-1450
www.uspto.gov

RECEIVED
FEB 1 0 2004
Technology Center 2100

Paper No. 10

STEVENS DAVIS MILLER & MOSHER, LLP
1615 L STREET, NW
SUITE 850
WASHINGTON DC 20036

In re Application of: KUNIJUKI KAJITA
Application No.: 10/018,658
Filed: December 21, 2001
For: **ENCODING/DECODING DEVICE AND ENCODING/DECODING METHOD**

DECISION ON PETITION FOR ACCELERATED EXAMINATION UNDER M.P.E.P. §708.02(VIII)

This is a decision on the petition, filed January 20, 2004 under 37 C.F.R. §1.102(d) and M.P.E.P. §708.02(VIII), which requests the Accelerated Examination of the above-identified application.

The petition is **DISMISSED**.

M.P.E.P. §708.02, Section VIII, which sets out the prerequisites for a grantable petition for Accelerated Examination under 37 C.F.R. §1.102(d), states in relevant part:

> A new application (one which has not received any examination by the examiner) may be granted special status provided that applicant (and this term includes applicant's attorney or agent) complies with each of the following items:
>
> (A) Submits a petition to make special accompanied by the fee set forth in 37 CFR 1.17(h);
> (B) Presents all claims directed to a single invention, or if the Office determines that all the claims presented are not obviously directed to a single invention, will make an election without traverse as a prerequisite to the grant of special status;
> (C) Submits a statement(s) that a pre - examination search was made, listing the field of search by class and subclass, publication, Chemical Abstracts, foreign patents, etc. A search made by a foreign patent office satisfies this requirement;
> (D) Submits one copy each of the references deemed most closely related to the subject matter encompassed by the claims if said references are not already of record; and
> (E) Submits a detailed discussion of the references, which **discussion points out, with the particularity required by 37 CFR 1.111(b) and (c), how** the claimed subject matter is patentable over the references.
>
> In those instances where the request for this special status does not meet all the prerequisites set forth above, applicant will be notified and the defects in the request will be stated. The application will remain in the status of a new application awaiting action in its regular turn. In those instances where a request is defective in one or more respects, applicant will be given one opportunity to perfect the request in a renewed petition to make special. If perfected, the request will then be granted. If not perfected in the first renewed petition, any additional renewed petitions to make special may or may not be considered at the discretion of the Group Special Program Examiner (emphasis added).

Petitioner's submission is deficient in that it does not comply with item (E) above:

Petitioner's submission does not provide a detailed discussion of the references, which points out, with the particularity required by 37 CFR 1.111(b) and (c), how the claimed subject

matter is patentable over the references. To be able to particularly point out how the claimed invention is patentable over the references as required by item (E) above, at least, a submission should include: (1) with respect to anticipation under 35 USC 102, a comparison between each claim and each of the references (limitation by limitation); and (2) with respect to obviousness under 35 USC 103, a showing of how and why one of ordinary skilled in the art would not have been able to combine the references to come up with the claimed invention.

In the instant petition, Petitioner's submission generally includes three following parts:

-Part 1: a discussion of all the references;

-Part 2: a discussion of the claimed subject matter (claims 17-33) without (1) a comparison between the claimed invention and each of the references, and (2) a showing of how and why one of ordinary skilled in the art would not have been able to combine the references; and

-Part 3: a general conclusion to the effect that "[t]he references cited above, either alone or in combination, fail to discloses or suggest at least the above-noted features of the present claims including any of, *inter alia*, ..."

Petitioner's general conclusion with respect to the patentability of the claimed subject matter over the references without (1) a comparison between each claim and each of the references (limitation by limitation), and (2) a showing of how and why one of ordinary skilled in the art would not have been able to combine the references to come up with the claimed invention does not comply with item (E) above.

Accordingly, the Petition is **DISMISSED**. The application file will be forwarded to the Central Files of Technology Center 2100 to await examination in its proper turn based on its effective filing date. Any request for reconsideration must be filed within TWO MONTHS of the mailing date of this decision.

Bot LeDynh, J.D., Ph.D.
Special Programs Examiner
Technology Center 2100
Computer Architecture, Software, and Information Security
(703) 305-0651

UNITED STATES PATENT AND TRADEMARK OFFICE

COMMISSIONER FOR PATENTS
UNITED STATES PATENT AND TRADEMARK OFFICE
P.O. BOX 1450
ALEXANDRIA, VA 22313-1450
www.uspto.gov

Paper No. 12

MAILED

MAR 0 4 2004

Technology Center 2100

James E. Ledbetter
Stevens, Davis, Miller & Mosher, L.L.P.
1615 L Street, N.W.
Suite 850
Washington, D.C. 20036

In re Application of: Kajita Kunijuki	)	
Application No. 10/018,658	)	**DECISION ON PETITION**
Filed: December 21, 2001	)	**FOR ACCELERATED**
For: ENCODING/DECODING DEVICE	)	**EXAMINATION UNDER**
AND ENCODING/DECODING	)	**M.P.E.P. §708.02(VIII)**
METHOD	)	

This is a decision on the request for reconsideration, filed March 2, 2004 of the decision mailed January 20, 2004 denying the grant of special status based on M.P.E.P. §708.02, Section VIII.

M.P.E.P. §708.02, Section VIII which sets out the prerequisites for a grantable petition for Accelerated Examination under 37 C.F.R. §1.102(d) states in relevant part:

> A new application (one which has not received any examination by the examiner) may be granted special status provided that applicant (and this term includes applicant's attorney or agent) complies with each of the following items:
>
> (a) Submits a petition to make special accompanied by the fee set forth in 37 CFR 1.17(h);
>
> (b) Presents all claims directed to a single invention, or if the Office determines that all the claims presented are not obviously directed to a single invention, will make an election without traverse as a prerequisite to the grant of special status.
>
> (c) Submits a statement(s) that a pre - examination search was made, listing the field of search by class and subclass, publication, Chemical Abstracts, foreign patents, etc. A search made by a foreign patent office satisfies this requirement;
>
> (d) Submits one copy each of the references deemed most closely related to the subject matter encompassed by the claims if said references are not already of record; and
>
> (e) Submits a detailed discussion of the references, which discussion points out, with the particularity required by 37 CFR 1.111(b) and (c), how the claimed subject matter is patentable over the references.

Applicant's submission filed February 24, 2004, corrects the deficiencies noted in the previous

decision of mail date January 20, 2004. The combined submissions now meet all the criteria set out above, accordingly, the Petition is **GRANTED**.

The application file is being forwarded to the Examiner of Record for accelerated examination according to the procedures set forth in M.P.E.P. §708.02, Section VIII.

Pinchus M. Laufer
Special Programs Examiner
Technology Center 2100
Computer Architecture, Software, and Information Security
(703) 306-4160

SPE B. Utech

SPE RESPONSE FOR CERTIFICATE OF CORRECTION 10/018,673

Paper No.: _____

DATE : 6/21/05

TO SPE OF : ART UNIT 1722

SUBJECT : Request for Certificate of Correction on Patent No.: 6722872

A response is requested with respect to the accompanying request for a certificate of correction.

Please complete this form and return with file, within 7 days to:
Palm location **7580, Certificates of Correction Branch – South Tower – 9A22**
If response is for an IFW, **return to employee (named below) via PUBSCofC Team in MADRAS.**
With respect to the change(s) requested, correcting Office and/or Applicant's errors, should the patent read as shown in the certificate of correction (COCIN)? No new matter should be introduced, nor should the scope or meaning of the claims be changed.

Lamonte M. Newsome

Thank You For Your Assistance

Certificates of Correction Branch
Tel. No. 703-305-8309

The request for issuing the above-identified correction(s) is hereby:
Note your decision on the appropriate box.

- ☐ **Approved** — **All** changes apply.
- ☒ **Approved in Part** — Specify below which changes **do not** apply.
- ☐ **Denied** — State the reasons for denial below.

Comments:

Changes to col. 1, col. 6 and col. 8 approved.
Change to title page denied as form PTO/SB/44 contained typographical error. "by days. days." should be "by 249 days."

DUANE SMITH
SUPERVISORY PATENT EXAMINER

SPE — **Art Unit** 1724

PTO/SB/44 (04-05)
Approved for use through 04/30/2007. OMB 0651-0033
U.S. Patent and Trademark Office; U.S. DEPARTMENT OF COMMERCE
Under the Paperwork Reduction Act of 1995, no persons are required to respond to a collection of information unless it displays a valid OMB control number.
(Also Form PTO-1050)

UNITED STATES PATENT AND TRADEMARK OFFICE
CERTIFICATE OF CORRECTION

PATENT NO. : 6,722,872 B1

APPLICATION NO.: 10/018,673

ISSUE DATE : April 20, 2004

INVENTOR(S) : William J. Swanson et al.

It is certified that an error appears or errors appear in the above-identified patent and that said Letters Patent is hereby corrected as shown below:

Title Page, (*) Notice:
Line 3, delete "~~bydays.days~~.", insert -- by 224 days. -- X
"by 299 days",

Col. 1,
Line 40, delete "base", insert -- base. -- ok

Col. 6,
Line 41, delete "96.", insert -- 96, -- ok

Col. 8,
Line 15, delete "pace", insert -- place -- ok
Line 19, delete "alterative,", insert -- alternative, -- ok

MAILING ADDRESS OF SENDER (Please do not use customer number below):
DAVID R FAIRBAIRN
KINNEY & LANGE PA
312 SOUTH THIRD STREET
MINNEAPOLIS MINNESOTA 55415 1002

This collection of information is required by 37 CFR 1.322, 1.323, and 1.324. The information is required to obtain or retain a benefit by the public which is to file (and by the USPTO to process) an application. Confidentiality is governed by 35 U.S.C. 122 and 37 CFR 1.14. This collection is estimated to take 1.0 hour to complete, including gathering, preparing, and submitting the completed application form to the USPTO. Time will vary depending upon the individual case. Any comments on the amount of time you require to complete this form and/or suggestions for reducing this burden, should be sent to the Chief Information Officer, U.S. Patent and Trademark Office, U.S. Department of Commerce, P.O. Box 1450, Alexandria, VA 22313-1450. DO NOT SEND FEES OR COMPLETED FORMS TO THIS ADDRESS. SEND TO: **Attention Certificate of Corrections Branch, Commissioner for Patents, P.O. Box 1450, Alexandria, VA 22313-1450.**

If you need assistance in completing the form, call 1-800-PTO-9199 and select option 2.

MAY 24 2005

US006722872B1

(12) **United States Patent**
Swanson et al.

(10) **Patent No.: US 6,722,872 B1**
(45) **Date of Patent: Apr. 20, 2004**

(54) **HIGH TEMPERATURE MODELING APPARATUS**

(75) Inventors: **William J. Swanson**, St. Paul, MN (US); **Patrick W. Turley**, Eden Prairie, MN (US); **Paul J. Leavitt**, Minneapolis, MN (US); **Peter J. Karwoski**, Circle Pines, MN (US); **Joseph E. LaBossiere**, Lino Lakes, MN (US); **Robert L. Skubic**, Chanhassen, MN (US)

(73) Assignee: **Stratasys, Inc.**, Eden Prairie, MN (US)

(*) Notice: Subject to any disclaimer, the term of this ~~patent is extended or adjusted~~ under 35 U.S.C. 154(b) by 249 days.

(21) Appl. No.: **10/018,673** 224

(22) PCT Filed: **Jun. 23, 2000**

(86) PCT No.: **PCT/US00/17363**

§ 371 (c)(1),
(2), (4) Date: **Dec. 13, 2001**

(87) PCT Pub. No.: **WO00/78519**

PCT Pub. Date: **Dec. 28, 2000**

Related U.S. Application Data

(60) Provisional application No. 60/140,613, filed on Jun. 23, 1999.

(51) **Int. Cl.**[7] **B29C 41/02**; B29C 41/36

(52) **U.S. Cl.** **425/225**; 425/226; 425/375

(58) **Field of Search** 425/225, 226, 425/375

(56) **References Cited**

U.S. PATENT DOCUMENTS

4,749,347 A * 6/1988 Valavaara 425/135
5,121,329 A * 6/1992 Crump 425/174.4
5,402,351 A * 3/1995 Batchelder et al. 364/468
5,764,521 A * 6/1998 Batchelder et al. 425/375
5,866,058 A * 2/1999 Batchelder et al. 264/308
5,939,008 A * 8/1999 Comb et al. 264/308
6,261,077 B1 * 7/2001 Bishop et al. 425/174.4

OTHER PUBLICATIONS

Paper entitled "High Temperature Fused Deposition Modelling: An Experimental Study Focusing on Modelling Materials", by F.K. Feenstra, from Time–Compression Technologies '98 Conference (Oct. 13–14, 1998, Nottingham, U.K.).*

* cited by examiner

Primary Examiner—Robert B. Davis
(74) *Attorney, Agent, or Firm*—Kinney & Lange, P.A.

(57) **ABSTRACT**

Disclosed is a three-dimensional modeling apparatus (**10**) that builds up three-dimensional objects in a heated build chamber (**24**) by dispensing modeling material from a dispensing head (**14**) onto a base (**16**) in a pattern determined by control signals from a controller (**140**). The motion control components (**18, 20**) of the apparatus (**10**) are external to and thermally isolated from the build chamber (**24**). A deformable thermal insulator (**132**) forms a ceiling of the building chamber, allowing motion control of the dispensing head (**14**) in an x, y plane by an x-y gantry (**18**) located outside of and insulated from the build chamber (**24**). In the preferred embodiment, a material dispensing outlet (**66**) of the dispensing head is inside the chamber. Thermal isolation of the motion control components from the build chamber allows the chamber to be maintained at a high temperature.

22 Claims, 7 Drawing Sheets

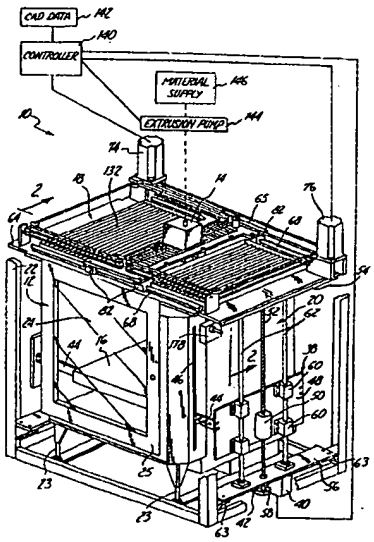

UNITED STATES PATENT AND TRADEMARK OFFICE

Commissioner for Patents
United States Patent and Trademark Office
P.O. Box 1450
Alexandria, VA 22313-1450
www.uspto.gov

WILLIAM J. HALLIHAN
HALLIHAN INTELLECTUAL PROPERTY, LTD.
125 SOUTH WACKER DRIVE.
SUITE 2080
CHICAGO IL 60606

COPY MAILED

APR 2 7 2005

OFFICE OF PETITIONS

In re Application of	:	
Leonard Reiffel	:	
Application No. 10/018,713	:	ON PETITION
Filed: December 12, 2001	:	
Attorney Docket No. TEMP2US	:	

This is a decision on the petition, filed April 19, 2005, under 37 CFR 1.313(c)(1) to withdraw the above-identified application from issue after payment of the issue fee.

The petition is **GRANTED**.

The above-identified application is withdrawn from issue due to unpatentability of one or more claims. See 37 CFR 1.313(c)(1). See also, 37 CFR 1.4(c).

The application is hereby withdrawn from issue.

Telephone inquiries should be directed to the undersigned at (571) 272-3208.

This matter is being referred to Technology Center AU 3736.

Karen Creasy

Karen Creasy
Petitions Examiner
Office of Petitions
Office of the Deputy Commissioner
for Patent Examination Policy

UNITED STATES PATENT AND TRADEMARK OFFICE

COMMISSIONER FOR PATENTS
UNITED STATES PATENT AND TRADEMARK OFFICE
P.O. BOX 1450
ALEXANDRIA, VA 22313-1450
www.uspto.gov

MAIL

JUL 2 9 2005

DIRECTOR OFFICE
TECHNOLOGY CENTER 2100

M. Robert Kestenbaum
11011 Bermuda Dunes NE
Albuquerque, NM 87111

In re Application of: Meyer-Grafe, et al. Application No. 10/018,721 Attorney Docket No. (H)01PH0419USP Filed: December 14, 2001 For: SECURITY-RELATED BUS AUTOMATION SYSTEM	)))))))	**DECISION ON PETITION TO WITHDRAW HOLDING OF ABANDONMENT UNDER 37 CFR §1.181**

This is a decision on the petition, filed March 23, 2005 requesting the Withdrawal of the Holding of Abandonment of the above-identified application, under 37 CFR §1.181. The instant application was held abandoned for failure to timely pay the issue fee due in response to the Notice of Allowance and Fee(s) Due (PTOL-85) mailed September 30, 2004. A Notice of Abandonment was mailed on February 2, 2005.

According to the MPEP §711.03(c), the showing required to establish non-receipt of an Office action includes the following:

1) a statement from practitioner that the Office action was not received,
2) a statement from practitioner that the file jacket and docket records were searched,
3) a copy of the docket record at the address of record, and
4) a reference to the docket record in the practitioner's statement.

In support of the petition, applicants' representative provides a statement that the Notice of Allowance and Fee(s) Due, mailed September 30, 2004, was not received and that a search of the file jacket and document records has been performed. Petitioner has also submitted a copy of the docket record at the address of record, a statement by docket clerk Heidi M. Ortiz as well as a reference to the docket record in practitioner's statement.

Petitioner has established non-receipt of the Office action according to the requirements set forth above. Accordingly, the petition is **GRANTED**.

The application is being forwarded to the Supervisory Legal Instruments Examiner with instructions to **WITHDRAW** the holding of abandonment and restore the instant application to pending status. Since the Issue Fee has already been paid (March 23, 2005 - $1,400.00), the instant application will then be forwarded to the Office of Patent Publications for further processing.

Any questions regarding this decision may be directed to the undersigned at 571-272-3595.

Brian L. Johnson
Special Programs Examiner
Technology Center 2100
Computer Architecture, Software, and Information Security

7/20/05

UNITED STATES PATENT AND TRADEMARK OFFICE

Commissioner for Patents
United States Patent and Trademark Office
P.O. Box 1450
Alexandria, VA 22313-1450
www.uspto.gov

MORGAN & FINNEGAN, L.L.P.
3 WORLD FINANCIAL CENTER
NEW YORK NY 10281-2101

COPY MAILED

SEP 2 5 2007

OFFICE OF PETITIONS

In re Application of	:	
Kajiyama et al.	:	
Application No. 10/018,732	:	ON PETITION
Filed: March 8, 2002	:	
Attorney Docket No. 3620-4014	:	

This is a decision on the petition under 37 C.F.R. § 1.137(b), filed August 27, 2007, to revive the above-identified application.

The petition is **GRANTED.**

The petition satisfies the conditions for revival pursuant to the provisions of 37 CFR 1.137(b) in that (1) the reply in the form of an Amendment; (2) the petition fee; and (3) the required statement of unintentional delay have been received. Accordingly, the response has been accepted as having been unintentionally delayed.

This matter is being referred to Technology Center 1700 for further examination on the merits.

Telephone inquiries regarding this decision should be directed to the undersigned at (571) 272-3206.

Liana Walsh
Petitions Examiner
Office of Petitions

26 FEB 2003

UNITED STATES PATENT AND TRADEMARK OFFICE

COMMISSIONER FOR PATENT
UNITED STATES PATENT AND TRADEMARK OFFIC
WASHINGTON, D.C. 20231
www.uspto.go

GOTTLIEB, RACKMAN & REISMAN, P.C.
270 MADISON AVENUE
NEW YORK, NEW YORK 10016

In re Application of	:	
CAPLYGIN	:	
Application No.: 10/018,733	:	
PCT No.: PCT/AU00/00661	:	
Int. Filing Date: 15 June 2000	:	DECISION ON PETITION
Priority Date: 15 June 1999	:	
Attorney's Docket No.:4402-003	:	UNDER 37 CFR 1.10(d)
For: SYSTEM FOR ENHANCEMENT OF	:	
NEUROLOGICAL PROCESSES	:	

This decision is in response to applicant's "Petition to Correct US National Phase Filing Date Under PCT Rules 82.1(b) and 48(2) and in view of 37 CFR 1.10(d)" in the above reference application, filed 10 April 2002 in the United States Patent and Trademark Office (USPTO). Applicants request that a filing date of 17 December 2001 be accorded to the U.S. national stage papers. No petition fee is required.

BACKGROUND

On 15 June 2000, applicant filed international application No. PCT/AU00/00661 which claimed a priority date of 15 June 1999, and which designated the United States.

A Demand was filed with the International Preliminary Examining Authority electing the United States. The election was made prior to the expiration of 19 months from the priority date, and as a result the deadline for entry into the national stage in the U.S. was extended and expired 30 months from the priority date, i.e. 17 December 2001 (15 December 2001 was a Saturday and 16 December 2001 was a Sunday.)

On 18 December 2001, one day after the expiration of the 30 month period, applicant filed a transmittal letter for entry into the national stage in the United States which was accompanied by, *inter alia*,: the basic national fee.

On 31 January 2002, a Notification of Missing Requirements (Form PCT/DO/EO/905) was erroneously mailed to applicant indicating that an oath or declaration executed by the inventor and the surcharge for filing the oath or declaration after the thirty month period ($65 for a small entity) was required. The notice set a response deadline of two months from the mail date of the notice or by 31 March 2002.

On 28 March 2002, applicant responded to the Notification of Missing Requirements with an executed declaration and $65 surcharge.

On 10 April 2002, applicant filed the present request to correct the filing date of the above referenced U.S. national stage application, accompanied by (1) Customer Copy of the Express Mail label #EL803336252US, (2) the law firm's Express Mail log and (3) the verified statements of Indra Moller, the law firm's receptionist, who keeps the log; Juan Colon, the law firm's mailroom attendant who delivers packages to the post office; and Trevis Evans, United States Postal Service employee. The original Express mail envelope bearing #EL803336252US and a "Date-In" of 18 December 2001 is located in the application file.

On 10 July 2002, a Notice of Acceptance (Form PCT/DO/EO/903) was erroneously mailed to applicants.

DISCUSSION

At the outset it is noted that applicant does not argue that there was any interruption in the mail service or unavoidable loss or delay in the mail as expressed in PCT Article 48 or Rule 82.2. Applicant acknowledges that the interruption in mail service from the period November 16, 2001 through November 29, 2001 as set forth in "Termination of the Suspension of the 'Express Mail' Service of the United States Postal Service for mail addressed to ZIP Codes 202xx through 205xx" found on the USPTO website is not applicable to his situation.

Applicant claims that the Express Mailing bearing number #EL803336252US was deposited on 17 December 2001, however #EL803336252US was marked by the United States Postal Service (USPS) with the date "18 December 2001".

Where applicant alleges that the USPS incorrectly entered the "date-in" on the Express Mail label, 37 CFR 1.10(d) is applicable. 37 CFR 1.10(d) provides as follows:

> Any person filing correspondence under this section that was received by the Office and delivered by the "Express Mail Post Office to Addressee" service of the USPS, who can show that the "date-in" on the "Express Mail" mailing label or other official notation entered by the USPS was incorrectly entered or omitted by the USPS, may petition the Commissioner to accord the correspondence a filing date as of the date the correspondence is shown to have been deposited with the USPS, provided that:
>
> (1) The petition is filed promptly after the person becomes aware that the Office has accorded, or will accord, a filing date based upon an incorrect entry by the USPS;

(2) The number of the "Express Mail" mailing label was placed on the paper(s) or fee(s) that constitute the correspondence prior to the original mailing by "Express Mail";

(3) The petition includes a showing which establishes, to the satisfaction of the Commissioner, that the requested filing date was the date the correspondence was deposited in "Express Mail Post Office to Addressee" service prior to the last scheduled pickup for that day. Any showing pursuant to this paragraph must be corroborated by evidence from the USPS or that came into being after deposit and within one business day of the correspondence in the "Express Mail Post Office to Addressee" service of the USPS.

Petitioner has satisfied (1) above as the petition is considered promptly filed.

Subsection (d)(2) above is not satisfied since it does not appear that the number of the "Express Mail" mailing "EL803336252US" was placed a transmittal letter, certificate of mailing or the like prior to the original mailing by "Express Mail". The application file does not contain any papers bearing the Express Mail number "EL803336252US". Applicant has not provided a copy of any papers or fees that constitute the correspondence on which the "Express Mail" mailing label number was associated with, prior to the original mailing by "Express Mail". Thus, subsection (2) of 37 CFR 1.10(d) is not satisfied.

With regard to 37 CFR 1.10(d) (3), applicant submitted the statement of Indra Moller, receptionist at Gottlieb, Rackman and Reisman. Ms. Moller states that she is responsible for "making the daily entries in the firm's outgoing Express Mail Log prior to the delivery of express mail packages to the United States Post Office at Grand Central Station [USPS-GC] located at 450 Lexington Avenue Front, New York, NY 10017." Ms. Moller further states that on Monday December 17, 2001, she recorded in the firm's outgoing Express Mail Log express mail label EL803336252US" prior to its deposit with the USPS. Furthermore, the log kept by Ms. Moller indicates the "Express Mail" number but does not contain (1) the place, date and time of deposit; (2) the time of the last scheduled pick-up for that date and place of deposit; (3) the depositor's initials or signature; and (4) the date and time of entry in the log. The evidence of record (Ms. Moller's declaration) establishes that the log entry was created *prior to deposit*, rather than after the deposit was made with the USPS and within one business day. Thus, the evidence provided is insufficient to establish that the correspondence was deposited with the USPS on 17 December 2001. *See* MPEP 513, p.500-47 (Rev.1, Feb 2000).

Juan Colon, the firm's mailroom attendant, indicates in his declaration that on 17 December 2001, between 5:00 p.m. and 5:30 p.m., he "personally delivered a small batch of express mail packages from the firm to USPS-GC", including one package bearing express mail label EL803336252US in the Express Mail Depository Box prior to the last scheduled pickup for December 17, 2001 (which is 8:00 p.m.). However, Mr. Colon's statement was made nearly 4 months after the alleged Express Mail deposit, not within the requisite "one business day" of deposit.

The declaration of Ms. Trevis Evans, administrative assistant with the USPS of New York City in the Expedited Services Department, indicates that she conducted an internal

investigation of the USPS-NYC records for express mail label EL803336252US. Ms. Evans does not state that she has first hand knowledge that the envelope bearing Express Mail no. EL803336252US was deposited on December 17, 2001 between 5:00 p.m. and 5:30 p.m. and prior to the last scheduled pickup at Grand Central station. She states that "said express mail label received a handwritten "Date-In" of December 18, 2002 [sic] by a postal employee and was indicated as having been received by the Franklin D. Roosevelt post office ... in zipcode "10150" which differs from the applicant's claimed deposit date of December 17, 2001 in USPS-GC in zipcode 10017." Ms. Evans concludes that "[t]he differences between these dates and originating zip codes was due to receipt of a high volume of express mail package from a collections depositories after 5:00 p.m. at the USPS-GC on December 17, 2001 which affected normal post office handling procedures." Ms. Evans, however, does not explain how she knows that the express mail package was taken to the Roosevelt station or why it received a date-in of 18 December 2001 nor does her statement prove that the package was deposited at USPS-GC on December 17, 2001. Thus, the declaration of Ms. Evans, while coming from a presumably disinterested third party, does not provide evidence of the deposit of the Express Mail envelope on December 17, 2001 and thus, does not satisfy 37 CFR 1.10(d).

Petitioner has clearly not provided a satisfactory showing under 37 CFR 1.10(d)(2) and (3). Accordingly, it is inappropriate, on the present record, to accord the national stage papers a date of 17 December 2001. Thus, it is concluded that the records of the USPTO that indicate that the national stage application papers were received by the USPTO on 18 December 2001 (the date stamped on the application papers and shown on the addressee's copy of the "Express Mail" mailing label) should control.

For the reasons stated above, subsections (2) and (3) of 37 CFR 1.10(d) are not satisfied. Because the basic national fee was not paid by the thirty month deadline or by midnight December 17, 2001, the application was abandoned.

The Notification of Acceptance (Form PCT/DO/EO/903) erroneously mailed on 10 July 2002 is hereby **VACATED**. A Notification of Abandonment (Form PCT/DO/EO/909) will be issued indicating that the basic national fee was not paid by the 30 month period.

OPTIONS

To revive the abandoned application, applicant may wish to consider filing a petition to the Commissioner under 37 CFR 1.137(a) or (b) requesting that the application be revived. Any petition filed under 37 CFR 1.137(a) and/or a petition under 37 CFR 1.137(b) requesting that the application be revived must meet the criteria indicated in the revision of 37 CFR 1.137. See 62 Fed. Reg. 53131 (October 10, 1997); 1203 Off. Gaz. Pat. Office 63 (October 21, 1997) (Effective Date: 01 December 1997). This suggestion should not be construed as an indication as to whether or not any such petition(s) will be favorably considered.

CONCLUSION

Applicant's request that the national stage filing of PCT/AU00/00661 as 10/018,733 be accorded a filing date of 17 December 2001 is **DISMISSED WITHOUT PREJUDICE**.

The application will be forwarded to the United States Designated/Elected Office for further processing in accord with this decision including vacating the Notification of Acceptance (Form PCT/DO/EO/903) erroneously mailed on 10 July 2002 and issuing a Notification of Abandonment (Form PCT/DO/EO/909) indicating that the basic national fee was not paid by the 30 month period and that the application is abandoned.

Any reconsideration on the merits of this petition must be filed within TWO (2) MONTHS from the mail date of this decision. Any reconsideration request should include a cover letter entitled " Renewed Petition Under 37 CFR 1.10." Extensions of time may be obtained under 37 CFR 1.136(a).

Any further correspondence with respect to this matter should be addressed to the Assistant Commissioner for Patents, Box PCT, Washington, D.C. 20231, with the contents of the letter marked to the attention of the PCT Legal Office.

Cynthia M. Kratz

Cynthia M. Kratz
Attorney Advisor
PCT Legal Office

Telephone: 703-306-5467
Facsimile: 703-308-6459

UNITED STATES PATENT AND TRADEMARK OFFICE

05 MAY 2003

COMMISSIONER FOR PATENT
UNITED STATES PATENT AND TRADEMARK OFFIC
WASHINGTON, D.C. 20231
www.uspto.go

GOTTLIEB, RACKMAN & REISMAN, P.C.
270 MADISON AVENUE
NEW YORK, NEW YORK 10016

In re Application of CAPLYGIN Application No.: 10/018,733 PCT No.: PCT/AU00/00661 Int. Filing Date: 15 June 2000 Priority Date: 15 June 1999 Attorney's Docket No.:4402-003 For: SYSTEM FOR ENHANCEMENT OF NEUROLOGICAL PROCESSES	DECISION ON PETITION UNDER 37 CFR 1.137(b)

This decision is in response to applicant's "Petition For Revival of An Application for Patent Abandoned Unintentionally Under 37 CFR 1.137(b)" in the above reference application, filed 11 March 2003 in the United States Patent and Trademark Office (USPTO).

BACKGROUND

On 18 December 2001, one day after the expiration of the 30 month period, applicant filed a transmittal letter for entry into the national stage in the United States which was accompanied by, *inter alia*,: the basic national fee.

On 31 January 2002, a Notification of Missing Requirements (Form PCT/DO/EO/905) was erroneously mailed to applicant indicating that an oath or declaration executed by the inventor and the surcharge for filing the oath or declaration after the thirty month period ($65 for a small entity) was required. The notice set a response deadline of two months from the mail date of the notice or by 31 March 2002. On 28 March 2002, applicant responded to the Notification of Missing Requirements with an executed declaration and $65 surcharge.

On 10 April 2002, applicant filed a request to correct the filing date of the above referenced U.S. national stage application under 37 CFR 1.10(d).

On 10 July 2002, a Notice of Acceptance (Form PCT/DO/EO/903) was erroneously mailed to applicants.

On 26 February 2003, a decision was mailed to applicant indicating that the application was abandoned for failure to pay the basic national fee by the thirty month deadline.

On 11 March 2003, applicant filed the instant petition to revive the application under 37 CFR 1.137(b).

DISCUSSION

A petition under 37 CFR 1.137(b) requesting that the application be revived on the grounds of unintentional abandonment must be accompanied by (1) the required reply, (2) the petition fee required by law, (3) a statement that the "entire delay in filing the required reply from the due date for the reply until the filing of a grantable petition was unintentional," and (4) any terminal disclaimer and fee required pursuant to 37 CFR 1.137(c).

With regard to Item (1), the required reply is the filing of the petition to revive and payment of the basic national fee of $520, which has been paid. As to Item (4), the terminal disclaimer is not required since this application was filed after 08 June 1995.

As to Item (2), the appropriate petition fee for petition for revival under 37 CFR 1.137(b) as of January 1, 2003, is $650 for a small entity as required by 37 CFR 1.17(m). Applicant submitted an insufficient fee in the amount of $640; the difference of $10 will be charged to applicant's deposit account per their authorization.

Item (3) is satisfied with applicant's statement that "entire delay in filing the required reply from the due date for the required reply until the filing of a grantable petition under 37 CFR 1.137(b) was unintentional". Thus, the requirements of 37 CFR 1.137(b) have been satisfied. Therefore, the request to revive the application abandoned under 35 U.S.C. 371(d) is granted as to the National stage in the United States of America.

CONCLUSION

The petition to revive under 37 CFR 1.137(b) is **GRANTED.**

This application is being forwarded to the National Stage Processing Division of the Office of PCT Operations for further processing. The 35 U.S.C. 371 date is **11 March 2003.**

Applicant is advised that effective May 1, 2003, correspondence with respect to this matter should be addressed to the Mail Stop PCT, Commissioner for Patents, Office of PCT Legal Administration, P.O. Box 1450, Alexandria, Virginia 22313-1450, with the contents of the letter marked to the attention of the Office of PCT Legal Administration.

Cynthia M. Kratz

Cynthia M. Kratz
Attorney Advisor
Office of PCT Legal Administration

Telephone: 703-306-5467
Facsimile: 703-308-6459

22 MAR 2005

#8

UNITED STATES PATENT AND TRADEMARK OFFICE

COMMISSIONER FOR PATENTS
UNITED STATES PATENT AND TRADEMARK OFFICE
P.O. BOX 1450
ALEXANDRIA, VA 22313-1450
www.uspto.gov

John T Callahan
Sughrue Mion
2100 Pennsylvania Avenue NW
Washington DC 20037-3213

In re Application of STRATFORD et al. Application No.: 10/018,783 PCT No.: PCT/GB00/02485 Int. Filing: 26 June 2000 Priority Date: 24 July 1999 Attorney Docket No.: Q67462 For: BALLOON EXPANDABLE STENT	DECISION ON PETITION UNDER 37 CFR 1.181

This is a decision on applicants' "Petition For Withdrawal of Holding of Abandonment under MPEP Section 711.03(c)(I)(B)" filed in the United States Patent and Trademark Office (USPTO) on 03 November 2004. The communication is being treated as a petition under 37 CFR 1.181. No petition fee is required.

BACKGROUND

On 21 December 2001, applicant filed a Transmittal Letter to the United States Designated/Elected Office (DO/EO/US) Concerning a Filing Under 35 U.S.C. 371 (Form PTO 1390) along with, *inter alia*, the basic national fee.

On 20 February 2002, a Notification of Missing Requirements (Form PCT/DO/EO/905) was mailed to applicants indicating that an oath or declaration, in compliance with 37 CFR 1.497(a) & (b), and the surcharge for filing oath or declaration after the thirty month period, were required.

On 19 March 2002, applicant filed a response to the Notification along with a declaration.

On 01 April 2002, a Notification of Defective Response was mailed to applicant indicating that the declaration did not respond to the Notification because the declaration did not comply with the requirements of 37 CFR 1.497(a) & (b) since the declaration did not identify the typed or printed name of each inventor or their citizenship. The Notification set a one month time period within which to respond. No extensions of time were available but the period for response set in the Notification of Missing Requirements could be extended under 37 CFR 1.136(a).

On 07 October 2004, a Notification of Defective Response Abandonment was mailed to applicant indicating that applicant had failed to properly respond to the Notification of Missing Requirements mailed on 20 February 2002 and thus, the application was abandoned.

On 03 November 2004, in response to the Notification of Defective Response Abandonment, applicant filed the instant response with, *inter alia*, a copy of the 12 June 2002 "Response to Notification of Defective Response", a copy of the executed declaration and an itemized USPTO date-stamped postcard indicating that an executed declaration and a request for

a two-month extension of time was filed on 12 June 2002.

DISCUSSION

The original declaration filed on 12 June 2002 is not located in the application file. A review of the finance records for 10/018,783 indicates that on 19 March 2002, the $130 surcharge for filing the declaration after the thirty month period was paid. The fees for a two month extension of time were not paid and will be charged to applicant's deposit account per his authorization.

As stated in section 503 of the Manual of Patent Examining Procedure (Rev. 2, May 2004)(MPEP):

> A postcard receipt which itemizes and properly identifies the papers which are being filed serves as *prima facie* evidence of receipt in the USPTO of all the items listed thereon on the date stamped thereon by the USPTO.

A review of the USPTO date-stamped, itemized postcard receipt indicates that the combined declaration and power of attorney was deposited with the USPTO on 12 June 2002 along with a petition for a two month extension of time.

The evidence submitted is sufficient to establish that a declaration for this application was received in the USPTO on 12 June 2002. The communication filed 03 November 2004 includes a copy of the executed declaration. Accordingly, it is appropriate to accept the copy of the declaration as a replacement for the missing original declaration with a deposit date of 12 June 2002. The evidence submitted by applicant, the postcard receipt date stamped by the USPTO, is sufficient to overcome the *prima facie* evidence of the application file itself.

A review of the declaration reveals that the declaration identifies the inventors, and states the citizenship and mailing address of the inventors. Thus, the declaration is acceptable and the requirements of 37 CFR 1.497 are met.

CONCLUSION

The petition under 37 CFR 1.181 is **GRANTED**. The request for a two month extension of time is granted.

The copy of the declaration originally submitted on 12 June 2002 and resubmitted on 03 November 2004 is acceptable and meets the requirements of 37 CFR 1.497(a) & (b).

The application will be forwarded to the United States Designated/Elected Office for further processing. The 35 U.S.C. 371(c)(1), (c)(2) & (c)(4) date is **12 June 2002**.

Cynthia M. Kratz

Cynthia M. Kratz
Attorney Advisor
PCT Legal Office

Telephone: (571) 272-3286
Facsimile: (571) 273-0459

UNITED STATES PATENT AND TRADEMARK OFFICE

UNITED STATES DEPARTMENT OF COMMERCE
United States Patent and Trademark Office
Address: COMMISSIONER FOR PATENTS
P.O. Box 1450
Alexandria, Virginia 22313-1450
www.uspto.gov

William S Frommer
Frommer Lawrence & Haug
745 Fifth Avenue
New York, NY 10151

Mail Date: 07/14/2010

Applicant	: Motoki Kato	: DECISION ON REQUEST FOR
Patent Number	: 7646967	: RECALCULATION of PATENT
Issue Date	: 01/12/2010	: TERM ADJUSTMENT IN VIEW
Application No	: 10/018,823	: OF WYETH AND NOTICE OF INTENT TO
Filed	: 04/24/2002	: ISSUE CERTIFICATE OF CORRECTION
		:

The Request for Recalculation is **GRANTED** to the extent indicated.

The patent term adjustment has been determined to be **2355** days. The USPTO will *sua sponte* issue a certificate of correction reflecting the amount of PTA days determined by the recalculation.

Prior to the issuance of the certificate of correction, the USPTO will afford patentee an opportunity to be heard and request reconsideration. Accordingly, patentee has **one month or thirty (30) days**, whichever is longer, to file a request for reconsideration of this patent term adjustment calculation. See 35 U.S.C. 154(b)(3)(B)(ii) and 37 CFR 1.322(a)(4). No extensions of time will be granted under 37 CFR 1.136.

Patentee should use document code PET.OP if electronically filing a request for reconsideration of this patent term adjustment calculation. The patentee must also include the information required by 37 CFR 1.705(b)(2) and the fee required by 37 CFR 1.18(e). If patentee does not file a timely request for reconsideration of this patent term adjustment calculation including the information required by 37 CFR 1.705(b)(2) and the fee required by 37 CFR 1.18(e), the USPTO will issue a certificate of correction reflecting the PTA determination noted above.

Patentee should be aware that in order to preserve the right to review in the United States District Court for the District of Columbia of the USPTO patent term adjustment determination, patentee must ensure that he or she also take the steps required under 35 U.S.C. 154(b)(4)(A) in a timely manner. Nothing in the request for recalculation should be construed as providing an alternative time frame for commencing a civil action under 35 U.S.C. 154(b)(4)(A).

Any questions concerning this decision should be directed to the Office of Patent Legal Administration at 571-272-7702.

UNITED STATES PATENT AND TRADEMARK OFFICE

COMMISSIONER FOR PATENTS
UNITED STATES PATENT AND TRADEMARK OFFICE
P.O. BOX 1450
ALEXANDRIA, VA 22313-1450
www.uspto.gov

Paper No.

NIELDS & LEMACK
176 EAST MAIN STREET, SUITE 7
WESTBORO, MA 01581

COPY MAILED

APR 2 6 2005

OFFICE OF PETITIONS

In re Patent No. 6,790,490	:	
Oiso et al.	:	DECISION ON REQUEST
Application No. 10/018,851	:	FOR RECONSIDERATION OF
Filed: December 17, 2001	:	PATENT TERM ADJUSTMENT
Attorney Docket No. 576P043	:	and
	:	NOTICE OF INTENT TO ISSUE
	:	CERTIFICATE OF CORRECTION

This is a decision on the "REQUEST FOR RECONSIDERATION OF PATENT TERM ADJUSTMENT," filed September 10, 2004. Patentees request that the patent term adjustment indicated on the Notice of Issuance (and in the patent) be corrected from zero (0) days to sixty-one (61) days.

The request for reconsideration of the patent term adjustment indicated in the patent is **GRANTED** to the extent indicated herein.

The patent term adjustment indicated in the patent is to be corrected by issuance of a certificate of correction showing a revised Patent Term Adjustment of **thirteen (13)** days.

On September 14, 2004, the above-identified application matured into U.S. Patent No. 6,790,490. The instant request for reconsideration filed September 10, 2004 was timely filed within 2 months of the date the patent issued. See § 1.705(d). The patent issued with a revised Patent Term Adjustment (PTA) of 0 days. The initial determination of PTA of 61 days was reduced by 93 days for applicants' submission of a paper styled

"STATEMENT OF SUBSTANCE OF INTERVIEW" filed June 14, 2004. Patentees dispute this reduction.

Patentees' arguments are well-taken. By Official Gazette Notice dated June 26, 2001, the Director has advised applicants and patentees that the filing after the mailing of a Notice of Allowance of a response to the examiner's reasons for allowance will not be considered a "failure to engage in reasonable efforts" to conclude processing or examination of an application and will not result in reduction of a patent term adjustment pursuant to 37 CFR 1.704(c)(10) *Clarification of 37 CFR 1.704(c)(10) - Reduction of Patent Term Adjustment for Certain Types of Papers Filed After a Notice of Allowance*, 1247 OG 111 (June 26, 2001). A review of the application record reveals that the reduction of 93 days was based on the filing of a paper styled "STATEMENT OF SUBSTANCE OF INTERVIEW." This paper is not identified as one of the papers the filing of which the Director has specifically deemed not to be a failure to engage in reasonable efforts within the meaning of § 1.704(c)(10). Nonetheless, under the circumstances of this case, it is concluded that applicants' filing of an Interview Summary after an Examiner's Interview Summary first mailed with the notice of allowance is not a failure to engage within the meaning of § 1.704(c)(10). Thus, it is concluded that the reduction of 93 days is not warranted.

However, a review of the record reveals that the period of reduction of 28 days entered for applicant delay in filing a response to the final Office action mailed December 3, 2003 is incorrect. As the amendment filed March 31, 2004 was not in compliance with § 1.113(c)[1], the period for reply to the final rejection continued to run. The proper reply, a Notice of Appeal, was not received in the Office until May 18, 2004. Pursuant to § 1.704(b), the patent term adjustment should have been reduced by 76 days for applicant delay from March 4, 2004 to May 18, 2004 in filing a proper reply to the final rejection.

In view thereof, the patent term adjustment indicated in the patent should have been thirteen **(13)** days.

The Office acknowledges submission of the $200.00 fee set forth in 37 CFR 1.18(e). No additional fees are required.

---

[1] See Advisory Action mailed April 26, 2004.

The application file is being forwarded to the Certificates of Correction Branch for issuance of a certificate of correction in order to rectify this error. The Office will issue a certificate of correction indicating that the term of the above-identified patent is extended or adjusted by **THIRTEEN (13)** days.

Telephone inquiries specific to this decision should be directed to Nancy Johnson, Senior Petitions Attorney, at (571) 272-3219.

Karin Ferriter
Senior Legal Advisor
Office of Patent Legal Administration
Office of Deputy Commissioner
for Patent Examination Policy

Enclosure: DRAFT certificate of correction

UNITED STATES PATENT AND TRADEMARK OFFICE

Commissioner for Patents
United States Patent and Trademark Office
P.O. Box 1450
Alexandria, VA 22313-1450
www.uspto.gov

ARKEMA INC
PATENT DEPARTMENT - 26TH FLOOR
2000 MARKET STREET
PHILADELPHIA, PA 19103-3222

COPY MAILED

MAY 19 2005

OFFICE OF PETITIONS

In re Application of	:	
Michel Devic	:	
Application No. 10/018,868	:	ON PETITION
Filed: March 7, 2002	:	
Attorney Docket No. 2988-694	:	

This is a decision on the petition under 37 CFR 1.173(b), filed April 25, 2005, to revive the above-identified application.

The petition is **GRANTED.**

The above-identified application became abandoned for failure to reply in a timely manner to the Notice of Non-Compliant Amendment (37 CFR 1.121(Notice)) mailed July 19, 2004. The Notice set a period for reply of one (1) month from the mail date of the Notice. No extensions of time under the provisions of 37 CFR 1.136(a) were obtained. Accordingly, the above-identified application became abandoned on August 20, 2004.

Telephone inquiries concerning this decision should be directed to Wan Laymon at (571) 272-3220.

This matter is being referred to Technology Center AU 1754.

Wan Laymon
Wan Laymon
Petitions Examiner
Office of Petitions
Office of the Deputy Commissioner
for Patent Examination Policy

MAR 2 5 2002

UNITED STATES PATENT AND TRADEMARK OFFICE

#3

COMMISSIONER FOR PATENTS
UNITED STATES PATENT AND TRADEMARK OFFICE
WASHINGTON, D.C. 20231
www.uspto.gov

David G. Parkhurst
Fulwider Patton Lee & Utecht, LLP
Howard Hughes Center
6060 Center Drive, 10th Floor
Los Angeles, CA 90045

In re Application of FINI et al. Application No.: 10/018,899 PCT No.: PCT/US00/06164 Int. Filing Date: 09 March 2000 Priority Date: 12 March 1999 Attorney Docket No.: MALCC 59155 For: FACE OR NOSE MASK FOR NON-INVASIVE VENTILATION OF PATIENTS IN GENERAL	DECISION ON PETITION UNDER 37 CFR 1.137(b)

This decision is in response to applicant's "PETITION FOR REVIVAL OF AN APPLICATION FOR PATENT ABANDONED UNINTENTIONALLY UNDER 37 C.F.R. § 1.137(b)" filed 17 December 2001.

BACKGROUND

On 09 March 2000, applicants filed international application PCT/US00/06164, which claimed a priority date of 12 March 1999. A copy of the international application was communicated to the United States Patent and Trademark Office (USPTO) from the International Bureau on 14 September 2000. A Demand for international preliminary examination, in which the United States was elected, was filed on 22 September 2000, which was within nineteen months from the priority date. Accordingly, the thirty-month period for paying the basic national fee in the United States expired at midnight on 12 September 2001.

On 17 December 2001, applicants filed a submission for entry into the national stage in the United States which was accompanied by, *inter alia*, the U.S. Basic National Fee, the surcharge under 37 CFR 1.492(e) for providing the oath or declaration later than thirty months from the priority date, and the instant "PETITION FOR REVIVAL OF AN APPLICATION FOR PATENT ABANDONED UNINTENTIONALLY UNDER 37 C.F.R. § 1.137(b)".

DISCUSSION

A petition to revive the present application under 37 CFR 1.137(b) must include:

(1) The required reply;

(2) The petition fee;
(3) A statement that the entire delay in filing the required reply from the due date for the reply until the filing of a grantable petition was unintentional.

As to item (1), applicants submitted the basic national fee on 17 December 2001.

As to item (2), applicants submitted the petition fee of $1,280.00 on 17 December 2001.

With regard to item (3), petitioner has provided the required statement.

A review of the application file reveals that, with the filing of the present petition and accompanying papers, a proper response has been submitted and all of the requirements of 37 CFR 1.137(b) for revival have been satisfied and revival is therefore appropriate.

CONCLUSION

The petition under 37 CFR 1.137(b) is **GRANTED** for the reasons set forth above.

Please direct any further correspondence with respect to this matter to the Commissioner of Patents and Trademarks, Box PCT, Washington, D.C. 20231, and address the contents of the letter to the attention of the Office of PCT Legal Administration.

This application is being forwarded to the National Stage Processing Branch of the Office of PCT Operations to continue national stage processing of the application including preparing and mailing a NOTIFICATION OF MISSING REQUIREMENTS (Form PCT/DO/EO/905) requiring an oath or declaration in compliance with 37 CFR 1.497(a)-(b).

Daniel Stemmer
Legal Examiner
PCT Legal Affairs
Office of Patent Cooperation Treaty
Legal Administration
Telephone: (703) 308-2066
Facsimile: (703) 308-6459

SPE RESPONSE FOR CERTIFICATE OF CORRECTION

Paper No.: _____

DATE : 10-24-07

TO SPE OF : ART UNIT 1615

SUBJECT : Request for Certificate of Correction for Appl. No.: 10/018 933 Patent No.: 7083810

Please respond to this request for a certificate of correction within 7 days.

Please review the requested changes/corrections as shown in the **COCIN** document(s) in the IFW application image. No new matter should be introduced, nor should the scope or meaning of the claims be changed.

Please Check Inventors

Please complete the response (see below) and forward the completed response to scanning using document code **COCX**.

Ennis Young

Certificates of Correction Branch

703-308-9390 ext. 117

Thank You For Your Assistance

The request for issuing the above-identified correction(s) is hereby:

Note your decision on the appropriate box.

- ☐ Approved — All changes apply.
- ☐ Approved in Part — Specify below which changes do not apply.
- ☐ Denied — State the reasons for denial below.

Comments: _____

MICHAEL P. WOODWARD
SUPERVISORY PATENT EXAMINER
TECHNOLOGY CENTER 1600

SPE

1615
Art Unit

MAR 1 2 2002
UNITED STATES PATENT AND TRADEMARK OFFICE

COMMISSIONER FOR PATENTS
UNITED STATES PATENT AND TRADEMARK OFFICE
WASHINGTON, D.C. 20231
www.uspto.gov

#3

Birch Stewart Kolasch & Birch LLP
P.O. Box 747
Falls Church, VA 22040-0747

In re Application of FUKUNAGA, Katsuaki, et al. Application No.: 10/018,956 PCT No.: PCT/JP00/04672 Int. Filing Date: 12 July 2000 Priority Date: 14 July 1999 Attorney's Docket No.: 0425-0871P For: COOLANT FOR AIRBAG INFLATOR PROCESS FOR PROVIDING THE SAME	DECISION ON PAPERS UNDER 37 C.F.R. 1.42

On 27 December 2001, applicants filed papers for entry into the national stage in the United States. The declaration indicated that one inventor is deceased. This has been treated as a request for status under 37 CFR 1.42.

BACKGROUND

On 12 July 2000, applicants filed international application PCT/JP00/04672, which claimed a priority date of 14 July 1999 and which designated the United States. A copy of the international application was communicated to the United States Patent and Trademark Office (USPTO) from the International Bureau on 25 January 2001.

A Demand electing the United States was filed with the International Preliminary Examining Authority on 17 January 2001. The election was made prior to the expiration of the nineteen months from the priority date. As a result, the deadline for payment of the basic national fee was extended to expire thirty months from the priority date, i.e., 14 January 2002.

On 27 December 2001, applicants filed a submission for entry into the national stage in the United States which was accompanied by, *inter alia*, the U.S. Basic National Fee and a declaration.

DISCUSSION

Under 37 CFR 1.42, in case of the death of the inventor, the legal representative (executor, administrator, etc.) of the deceased inventor may make the necessary oath or declaration, and apply for and obtain the patent.

The declaration is signed by inventors Katsuaki Fukunaga, Satoshi Yagi, and Mitsunori Ota and provides their citizenships, residences and mailing addresses. Additionally, the

declaration identifies Emiko Chiba as the sole heir of deceased inventor Masahiro Chiba and provides the citizenship, residence and mailing address of the sole heir in addition to the citizenship, and last known mailing address and residence of Masahiro Chiba.

This submission signed by Emiko Chiba as "sole heir" is construed as an indication that a legal representative has not been appointed nor is one required to be appointed by applicable law, and thus, the heir is signing as the legal representative of the estate. See MPEP 409.01(d). If this interpretation is incorrect, applicants are required to promptly notify the Office of such and to submit a declaration properly executed by the legal representative of the deceased inventor in response to the decision.

CONCLUSION

For the above reasons, the request for status under 37 C.F.R. 1.42 is **GRANTED**.

The application has an international filing date of 12 July 2000 under 35 U.S.C. §363 and a date of 27 December 2001 under 35 U.S.C. §371. This application is being forwarded to the National Stage Processing Division of the Office of the PCT Operations for continued processing.

Boris Milef
PCT Legal Examiner
PCT Legal Administration

Erin M. Pender
Erin M. Pender
Attorney Advisor
PCT Legal Administration

Telephone: 703-305-0455
Facsimile: 703-308-6459

#8

OIPE JC184
JUN 0 4 2002
PATENT & TRADEMARK OFFICE

COPY OF PAPERS
ORIGINALLY FILED

IN THE UNITED STATES PATENT AND TRADEMARK OFFICE

In re Patent Application of:	)	
Malcolm Bruce GRAY et al.	)	Group Art Unit:
Serial No. 10/018,958	)	Examiner:
Filed: December 27, 2001	)	
For: INTERFEROMETER CONTROL AND LASER FREQUENCY LOCKING	)	Date: May 23, 2002

CERTIFICATE OF MAILING

I hereby certify that this correspondence is being deposited with the United States Postal Service with sufficient postage as First Class Mail in an envelope addressed to: Commissioner for Patents, Washington, D.C. 20231, on May 23, 2002.

Jeannie Saxton

PETITION UNDER RULE 37 C.F.R. §1.182

Commissioner for Patents
Washington, D.C. 20231

Sir:

Please change the listing of the inventors to now read as follows.

Malcolm Bruce GRAY and Daniel Anthony SHADDOCK

The above fee is covered by the attached check in the amount of $130.00.

Respectfully submitted,

Donald R. Studebaker
Registration No. 32,815

Nixon Peabody LLP
8180 Greensboro Drive
Suite 800
McLean, Virginia 22102
(703) 770-9300

06/10/2002 SDENBOB1 00000026 10018958
01 FC:122 130.00 OP

RECEIVED
JUN 1 3 2002
OFFICE OF PETITIONS

NVA227201.1

UNITED STATES PATENT AND TRADEMARK OFFICE

COMMISSIONER FOR PATENTS
UNITED STATES PATENT AND TRADEMARK OFFICE
WASHINGTON, D.C. 20231
www.uspto.gov

356/ 450+

Paper No. 10

NIXON PEABODY, LLP
8180 GREENSBORO DRIVE
SUITE 800
MCLEAN VA 22102

COPY MAILED

FEB 2 8 2003

OFFICE OF PETITIONS

In re Application of
Gray and Shaddock
Application No. 10/018,958
Filed: May 29, 2002
Attorney Docket No. 743414-0008

ON PETITION

This is a decision on the petition under 37 CFR 1.182, filed November 13, 2002, to change the order of the names of the inventors.

The petition is **granted**.

The order of the names of the inventors will be changed as follows:

1. Malcolm Bruce Gray
2. Daniel Anthony Shaddock

The Office records have been corrected to reflect the change of the order of inventorship as indicated above.

The application file is being forwarded to the Office of Initial Patent Examination for review of the request for a corrected filing receipt submitted on August 14, 2002.

Telephone inquiries concerning this matter may be directed to the undersigned at (703) 306-5589.

Christina Tartera Donnell

Christina Tartera Donnell
Senior Petitions Attorney
Office of Petitions

SPE RESPONSE FOR CERTIFICATE OF CORRECTION

Paper No.: X

DATE : **October 02,2007**

TO SPE OF : ART UNIT **1623**

SUBJECT : Request for Certificate of Correction for Appl. No.: **10/018,963** Patent No.: **7078403 B1**

A response is requested with respect to a request for a certificate of correction.

With respect to the change(s) requested to correct Office and/or Applicant's errors, should the patent read as shown in the certificate of correction attached herewith or the COCIN document(s), in IFW images for the above-identified patented application? No new matter should be introduced, nor should the scope or meaning of the claims be changed.

If the response is for an IFW, within **7** days, please complete and forward the response, to the employee (named below) via scanning into application images, using document code **COCX**.

DO NOT SENT TO ATTORNEY

If the response is for a paper file wrapper, please complete the response and forward the response with the paper file wrapper, to the employee (named below), within **7** days, to:

Certificates of Correction Branch (CofC)
South Tower - 9A22
Palm Location 7580

LAMONTE NEWSOME
Certificates of Correction Branch
703-308-9390 ext. 112

Thank You For Your Assistance

The request for issuing the above-identified correction(s) is hereby:
Note your decision on the appropriate box.

☐ **Approved**	**All** changes apply.
☒ **Approved in Part**	Specify below which changes **do not** apply.
☐ **Denied**	State the reasons for denial below.

Comments: The correction of Claim 25 at column 47, line 58 is incorrect. The claim presently has proper dependence and cannot be a method of treatment claim depending from a pharmaceutical composition claim as suggested by the proposed change.

LECRANE:lec

SPE

1623
Art Unit

PTOL-306 (REV. 7/03)

U.S. DEPARTMENT OF COMMERCE Patent and Trademark Office

UNITED STATES PATENT AND TRADEMARK OFFICE

UNITED STATES DEPARTMENT OF COMMERCE
United States Patent and Trademark Office
Address: COMMISSIONER FOR PATENTS
P.O. Box 1450
Alexandria, Virginia 22313-1450
www.uspto.gov

JENKINS, WILSON, TAYLOR & HUNT, P. A.
Suite 1200 UNIVERSITY TOWER
3100 TOWER BLVD.,
DURHAM, NC 27707

Mail Date: 04/21/2010

Applicant	: Manfred Kogler	: DECISION ON REQUEST FOR
Patent Number	: 7639744	: RECALCULATION of PATENT
Issue Date	: 12/29/2009	: TERM ADJUSTMENT IN VIEW
Appliction No	: 10/018,976	: OF WYETH AND NOTICE OF INTENT TO
Filed	: 03/14/2002	: ISSUE CERTIFICATE OF CORRECTION
		:

The Request for Recalculation is **GRANTED** to the extent indicated.

The patent term adjustment has been determined to be **1013** days. The USPTO will *sua sponte* issue a certificate of correction reflecting the amount of PTA days determined by the recalculation.

Prior to the issuance of the certificate of correction, the USPTO will afford patentee an opportunity to be heard and request reconsideration. Accordingly, patentee has **one month or thirty (30) days**, whichever is longer, to file a request for reconsideration of this patent term adjustment calculation. See 35 U.S.C. 154(b)(3)(B)(ii) and 37 CFR 1.322(a)(4). No extensions of time will be granted under 37 CFR 1.136.

Patentee should use document code PET.OP if electronically filing a request for reconsideration of this patent term adjustment calculation. The patentee must also include the information required by 37 CFR 1.705(b)(2) and the fee required by 37 CFR 1.18(e). If patentee does not file a timely request for reconsideration of this patent term adjustment calculation including the information required by 37 CFR 1.705(b)(2) and the fee required by 37 CFR 1.18(e), the USPTO will issue a certificate of correction reflecting the PTA determination noted above.

Patentee should be aware that in order to preserve the right to review in the United States District Court for the District of Columbia of the USPTO patent term adjustment determination, patentee must ensure that he or she also take the steps required under 35 U.S.C. 154(b)(4)(A) in a timely manner. Nothing in the request for recalculation should be construed as providing an alternative time frame for commencing a civil action under 35 U.S.C. 154(b)(4)(A).

Any questions concerning this decision should be directed to the Office of Patent Legal Administration at 571-272-7702.

UNITED STATES PATENT AND TRADEMARK OFFICE

Commissioner for Patents
United States Patent and Trademark Office
P.O. Box 1450
Alexandria, VA 22313-1450
www.uspto.gov

042005

M. Robert Kestenbaum
11011 Bermuda Dunes NE
Albuquerque NM 87111

APR 25 2005

In re Application of:
Herbert Schumacher
Serial No.: 10/018,979
Filed: December 18, 2001
For: AUTOMOTIVE EXHAUST SILENCER SYSTEM WITH VARIABLE DAMPING CHARACTERISTICS

DECISION ON PETITION TO WITHDRAW HOLDING OF ABANDONMENT

This is a decision on the petition filed February 8, 2005, to withdraw the holding of abandonment of the above-identified application.

The petition is GRANTED.

A non-final Office action was mailed June 17, 2004, setting a three-month shortened statutory period for filing a reply. In the apparent absence of a response, a Notice of Abandonment was mailed on January 26, 2005.

Petitioner asserts that a reply was timely filed. In support of the assertion that a reply was timely filed, petitioner submitted the following papers as evidence of timely submission: 1) a copy of a response which bears on of the last page and after the signature a Certificate of Mailing under 37 C.F.R. § 1.8(a) dated December 17, 2004, 2) a copy of an authorization to charge a credit card, 3) a statement in support of the petition under 37 C.F.R. § 1.8(b) signed by petitioner attesting to his personal knowledge that the reply was submitted to the PTO on December 17, 2004, and 4) a statement that a postcard receipt was not returned to petitioner.

The file record does not include the originally submitted papers.

The petition satisfies the conditions for accepting a reply filed via the certificate of mailing procedure under 37 C.F.R. § 1.8(a) but not received by the USPTO. Accordingly, the petition is granted.

The Notice of Abandonment mailed January 26, 2005 is hereby vacated and the holding of abandonment withdrawn.

The copy of the reply filed with the petition is hereby accepted since the Office has apparently lost the originally filed reply.

Any inquiry regarding this decision should be directed to Hien H. Phan, Special Program Examiner, at (571) 272-1606.

An Office action will be issued in due course.

Richard K. Seidel, Group Director
Technology Center 2800
Semiconductors, Electrical and Optical
Systems and Components

UNITED STATES PATENT AND TRADEMARK OFFICE

Commissioner for Patents
United States Patent and Trademark Office
P.O. Box 1450
Alexandria, VA 22313-1450
www.uspto.gov

MICHAEL C. STUART
COHEN PONTANI LIEBERMAN & PAVANE LLP
551 FIFTH AVENUE, SUITE 1210
NEW YORK, NY 10176

COPY MAILED

JUN 20 2006

OFFICE OF PETITIONS

In re Application of :
Jan Kall et al :
Application No. 10/018,983 : ON PETITION
Filed: February 21, 2002 :
Attorney Docket No. 4925-185PUS

This is a decision on the petition filed, June 12, 2006 under 37 CFR 1.313(c)(2) to withdraw the above-identified application from issue after payment of the issue fee.

The petition is **GRANTED**.

The above-identified application is withdrawn from issue for consideration of a submission under 37 CFR 1.114 (request for continued examination). See 37 CFR 1.313(c)(2).

Petitioner is advised that the issue fee paid on February 28, 2005 in the above-identified application cannot be refunded. If, however, the above-identified application is again allowed, petitioner may request that it be applied towards the issue fee required by the new Notice of Allowance.[1]

Telephone inquiries should be directed to Irvin Dingle at (571) 272-3210.

This matter is being referred to Technology Center AU 2617 for processing of the request for continued examination under 37 CFR 1.114 and for consideration of the concurrently filed Information Disclosure Statement.

Irvin Dingle
Petitions Examiner
Office of Petitions

---

[1] The request to apply the issue fee to the new Notice may be satisfied by completing and returning the new Issue Fee Transmittal Form PTOL-85(b), which includes the following language thereon: Commissioner for Patents is requested to apply the Issue Fee and Publication Fee (if any) or re-apply any previously paid issue fee to the application identified above. Petitioner is advised that, whether a fee is indicated as being due or not, the Issue Fee Transmittal Form **must** be completed and timely submitted to avoid abandonment. Note the language in bold text on the first page of the Notice of Allowance and Fee(s) Due (PTOL-85).

SPE RESPONSE FOR CERTIFICATE OF CORRECTION

Paper No.: X

DATE : June 17, 2008

TO SPE OF : ART UNIT 3731

SUBJECT : Request for Certificate of Correction for Appl. No.: 10/018985 Patent No.: 7331969 B1

A response is requested with respect to a request for a certificate of correction.

With respect to the change(s) requested to correct Office and/or Applicant's errors, should the patent read as shown in the certificate of correction attached herewith or the COCIN document(s), in IFW images for the above-identified patented application? No new matter should be introduced, nor should the scope or meaning of the claims be changed.

If the response is for an IFW, within **7** days, please complete and forward the response, to the employee (named below) via scanning into application images, using document code **COCX**.

DO NOT SENT TO ATTORNEY

If the response is for a paper file wrapper, please complete the response and forward the response with the paper file wrapper, to the employee (named below), within **7** days, to:

Certificates of Correction Branch (CofC)
South Tower - 9A22
Palm Location 7580

You can fax the Directors/SPE response to 571-270-9990

LAMONTE NEWSOME
Certificates of Correction Branch
703-308-9390 ext. 112

Thank You For Your Assistance

The request for issuing the above-identified correction(s) is hereby:
Note your decision on the appropriate box.

- ☒ **Approved** — **All** changes apply.
- ☐ **Approved in Part** — Specify below which changes **do not** apply.
- ☐ **Denied** — State the reasons for denial below.

Comments: _____

TODD E. MANAHAN
SUPERVISORY PATENT EXAMINER

SPE

3731
Art Unit

30 AUG 2002

UNITED STATES PATENT AND TRADEMARK OFFICE

COMMISSIONER FOR PATENTS
UNITED STATES PATENT AND TRADEMARK OFFICE
WASHINGTON, D.C. 20231
www.uspto.gov

Dr. D. Graeser
c/0 The Polkinghorns
9003 Florin Way
Upper Marlboro, Maryland 20772

In re Application of	:	
LAHAV et al.	:	DECISION ON
Application No.: 10/018,992	:	PAPERS UNDER 37 CFR 1.42
PCT No.: PCT/IL00/00364	:	
Int. Filing Date: 21 June 2000	:	
Priority Date: 22 June 1999	:	
Attorney Docket No.: DO1/2000	:	
For: STABLE BENZIMIDAZOLE FORMULATION		

This is a response to the declaration filed 27 June 2002 which is being treated as a request under 37 CFR 1.42. A two-month extension of time fee under 37 CFR 1.136(a) has been charged to Deposit Account no. 50-2090. No petition fee is required.

BACKGROUND

On 21 June 2000, applicants filed international application PCT/IL00/00364, which claimed a priority date of 22 June 1999. A copy of the international application was communicated to the United States Patent and Trademark Office from the International Bureau on 28 December 2000. A proper Demand was filed with the International Preliminary Examining Authority electing the United States. The election was made prior to the expiration of nineteen months from the priority date. As a result, the deadline for payment of the basic national fee was extended to expire on 26 December 2001.

On 26 December 2001, applicants filed a transmittal letter for entry into the national stage in the United States accompanied, inter alia, by: the basic national fee and a copy of the international application.

On 27 February 2002, the United States Designated/Elected Office (DO/EO/US) mailed a Notification of Missing Requirements (Form PCT/DO/EO/905) requiring an oath or declaration in compliance with 37 CFR 1.497 and the surcharge fee required under 37 CFR 1.492(e). The notification set a two-month time period to respond.

On 27 June 2002, applicants filed a declaration and power of attorney executed by Valerie Azoulay as inventor and Erica Lahav on behalf of deceased inventor, Raffael Lahav.

DISCUSSION

A. Request under 37 CFR 1.42

37 CFR 1.42 *When the Inventor is Dead,* states, in part:

> In case of the death of the inventor, the legal representative (executor, administrator, etc.) of the deceased inventor may make the necessary oath or declaration, and apply for and obtain the patent.

The declaration submitted on 27 June 2002 was executed by Erica Lahav as "executrix" of the deceased inventor, Raffael Lahav. The declaration submitted appears to have been executed by the proper party under 37 CFR 1.42, however, the declaration does not satisfy the requirements under 37 CFR 1.497(b)(2).

In addition, it is noted that revised 37 CFR 1.497(b)(2) states the following:

> (2) If the person making the oath or declaration or any supplemental oath or declaration is not the inventor (§§ 1.42, 1.43, or § 1.47) the oath or declaration shall state the relationship of the person to the inventor, and, upon information and belief, the facts which the inventor would have been required to state. If the person signing is the legal representative of a deceased inventor, the oath or declaration shall also state that the person is a legal representative and the citizenship, residence, and mailing address of the legal representative.

Pursuant to revised 37 CFR 1.497(b)(2), in addition to the citizenship and former residence and post office address of the deceased inventor referenced under 37 CFR 1.497(a)(3), the declaration must also provide residence, citizenship, and post office address for the executrix. The declaration filed on 27 June 2002 provides the residence, citizenship, and post office address for only one individual and it is unclear whether this information is for the executrix or the deceased inventor. Accordingly, the declaration is not in compliance with 37 CFR 1.497(b)(2).

CONCLUSION

For the above reasons, the request for status under 37 CFR 1.42 is REFUSED.

Applicant is required to provide an oath/declaration in compliance with 37 CFR 1.497(a)-(b) within **TWO (2) MONTH** from the mail date of this Decision. Failure to respond will result in the abandonment of the application. Any reconsideration request should include a cover letter entitled "Renewed Submission Under 37 CFR 1.42" and must include an acceptable declaration under 37 CFR 1.497 which has been executed by the either the legal representative of the deceased inventor or, if no legal representative has been appointed, all of the heirs of the deceased inventor.

Any further correspondence with respect to this matter should include a cover letter entitled "Renewed Submission Under 37 CFR 1.42" and be addressed to the Assistant Commissioner for Patents, Box PCT, Washington, D.C. 20231, with the contents of the letter marked to the attention of the PCT Legal Office.

Leonard Smith
PCT Legal Examiner
Office of PCT Legal Administration

Anthony Smith
Attorney-Advisor
Office of PCT Legal Administration
Tel: (703) 308-6314
Fax: (703) 308-6459

19 DEC 2002

UNITED STATES PATENT AND TRADEMARK OFFICE

COMMISSIONER FOR PATENTS
UNITED STATES PATENT AND TRADEMARK OFFICE
WASHINGTON, D.C. 20231
www.uspto.gov

Dr. D. Graeser
c/0 The Polkinghorns
9003 Florin Way
Upper Marlboro, Maryland 20772

In re Application of LAHAV et al. Application No.: 10/018,992 PCT No.: PCT/IL00/00364 Int. Filing Date: 21 June 2000 Priority Date: 22 June 1999 Attorney Docket No.: DO1/2000 For: STABLE BENZIMIDAZOLE FORMULATION	: : : : : : : :	DECISION ON PAPERS UNDER 37 CFR 1.42

This is a response to the "Renewed Submission under 37 CFR 1.42" filed 18 October 2002. No petition fee is required.

BACKGROUND

On 21 June 2000, applicants filed international application PCT/IL00/00364, which claimed a priority date of 22 June 1999. A copy of the international application was communicated to the United States Patent and Trademark Office from the International Bureau on 28 December 2000. A proper Demand was filed with the International Preliminary Examining Authority electing the United States. The election was made prior to the expiration of nineteen months from the priority date. As a result, the deadline for payment of the basic national fee was extended to expire on 26 December 2001.

On 26 December 2001, applicants filed a transmittal letter for entry into the national stage in the United States accompanied, inter alia, by: the basic national fee and a copy of the international application.

On 27 February 2002, the United States Designated/Elected Office (DO/EO/US) mailed a Notification of Missing Requirements (Form PCT/DO/EO/905) requiring an oath or declaration in compliance with 37 CFR 1.497 and the surcharge fee required under 37 CFR 1.492(e). The notification set a two-month time period to respond.

On 27 June 2002, applicants filed a declaration and power of attorney executed by Valerie Azoulay as inventor and Erica Lahav on behalf of deceased inventor, Raffael Lahav. In a decision dated 30 August 2002, applicants' request was dismissed because the declaration was defective under 37 CFR 497(b).

On 18 October 2002, applicants filed the present renewed request accompanied by a declaration/power of attorney executed by Erica Lahav as the "executrix" of the deceased inventor, Raffael Lahav.

DISCUSSION

Pursuant to 37 CFR 1.42, first sentence:

"In case of the death of the inventor, the legal representative (executor, administrator, etc.) of the deceased inventor may make the necessary oath or declaration, and apply for and obtain a patent."

The declaration filed 18 October 2002 is executed by Erica Lahav as the "executrix" of the deceased inventor, Raffael Lahav. However, a review of the declaration filed on 18 October 2002 reveals that the declaration executed by Erica Lahav is not in compliance with 37 CFR 1.497(a)(3). 37 CFR 1.497(a)(3) requires that the declaration must "identify each inventor and the residence and country of citizenship of each inventor." In this instance, the declaration executed by Erica Lahav does not identify the second inventor, Valerie Azoulay. Therefore, a new declaration executed by Erica Lahav, with the second inventor listed thereon, must be filed in order to fulfill the declaration requirement under 35 U.S.C. 371.

CONCLUSION

For the above reasons, the request for status under 37 CFR 1.42 is REFUSED.

Applicant is required to provide an oath/declaration in compliance with 37 CFR 1.497(a)-(b) within **TWO (2) MONTH** from the mail date of this Decision. Failure to respond will result in the abandonment of the application. Any reconsideration request should include a cover letter entitled "Renewed Submission Under 37 CFR 1.42" and must include an acceptable declaration under 37 CFR 1.497 which has been executed by the "executrix" of the deceased inventor.

Any further correspondence with respect to this matter should include a cover letter entitled "Renewed Submission Under 37 CFR 1.42" and be addressed to the Assistant Commissioner for Patents, Box PCT, Washington, D.C. 20231, with the contents of the letter marked to the attention of the PCT Legal Office.

Anthony Smith
Attorney-Advisor
Office of PCT Legal Administration
Tel: (703) 308-6314
Fax: (703) 308-6459

Leonard Smith
PCT Legal Examiner
Office of PCT Legal Administration

2 8 FEB 2003

UNITED STATES PATENT AND TRADEMARK OFFICE

COMMISSIONER FOR PATENTS
UNITED STATES PATENT AND TRADEMARK OFFICE
WASHINGTON, D.C. 20231
www.uspto.gov

Dr. D. Graeser
c/0 The Polkinghorns
9003 Florin Way
Upper Marlboro, Maryland 20772

In re Application of LAHAV et al. Application No.: 10/018,992 PCT No.: PCT/IL00/00364 Int. Filing Date: 21 June 2000 Priority Date: 22 June 1999 Attorney Docket No.: DO1/2000 For: STABLE BENZIMIDAZOLE FORMULATION	DECISION ON PAPERS UNDER 37 CFR 1.42

This is a response to the "Renewed Submission under 37 CFR 1.42" filed 19 February 2003. No petition fee is required.

BACKGROUND

On 21 June 2000, applicants filed international application PCT/IL00/00364, which claimed a priority date of 22 June 1999. A copy of the international application was communicated to the United States Patent and Trademark Office from the International Bureau on 28 December 2000. A proper Demand was filed with the International Preliminary Examining Authority electing the United States. The election was made prior to the expiration of nineteen months from the priority date. As a result, the deadline for payment of the basic national fee was extended to expire on 26 December 2001.

On 26 December 2001, applicants filed a transmittal letter for entry into the national stage in the United States accompanied, inter alia, by: the basic national fee and a copy of the international application.

On 27 February 2002, the United States Designated/Elected Office (DO/EO/US) mailed a Notification of Missing Requirements (Form PCT/DO/EO/905) requiring an oath or declaration in compliance with 37 CFR 1.497 and the surcharge fee required under 37 CFR 1.492(e). The notification set a two-month time period to respond.

On 27 June 2002, applicants filed a declaration and power of attorney executed by Valerie Azoulay as inventor and Erica Lahav on behalf of deceased inventor, Raffael Lahav. In a decision dated 30 August 2002, applicants' request was dismissed because the declaration was defective under 37 CFR 497(b).

On 18 October 2002, applicants filed "Renewed Submission under 37 CFR 1.42." In a decision dated 19 December 2002, applicants' request was dismissed because the declaration

was defective under 37 CFR 497.

On 19 February 2003, applicants the present renewed request under 37 CFR 1.42.

DISCUSSION

Pursuant to 37 CFR 1.42, first sentence:

"In case of the death of the inventor, the legal representative (executor, administrator, etc.) of the deceased inventor may make the necessary oath or declaration, and apply for and obtain a patent."

The declaration filed 19 February 2003 is executed by: Valerie Azoulay as inventor and Erica Lahav as the "executrix" of the deceased inventor. The declaration is acceptable under 37 CFR 1.42 and complies with 37 CFR 1.497(a)-(b). Accordingly, the requirements for entry into national stage under 35 U.S.C. 371(c) were completed as of 19 February 2003.

CONCLUSION

The papers filed under 37 CFR 1.42 are **ACCEPTED**.

The application has an international filing date of 21 June 2000, under 35 U.S.C. 363, and a 35 U.S.C. 371(c) date of 19 February 2003.

This application is being forwarded to the National Stage Processing Branch of the International Division for continued national stage processing.

Anthony Smith

Anthony Smith
Attorney-Advisor
Office of PCT Legal Administration
Tel: (703) 308-6314
Fax: (703) 308-6459

UNITED STATES PATENT AND TRADEMARK OFFICE

Commissioner for Patents
United States Patent and Trademark Office
P.O. Box 1450
Alexandria, VA 22313-1450
www.uspto.gov

December 2004

Young & Thompson
745 South 23rd Street
2nd Floor
Arlington, VA 22202

DEC 20 2004

In re Application of:
Albert Kohen et al.
Serial No.: 10/018,993
Filed: May 17, 2002
Attorney Docket No.: BIF 103907/US

DECISION ON PETITION TO WITHDRAW THE HOLDING OF ABANDONMENT

This is a decision on the petition to withdraw the holding of abandonment under 37 C.F.R. § 1.181(a) filed on July 12, 2004. There is no fee for this petition.

The petition is **GRANTED**.

Although a notice of abandonment was never mailed, this application was noted to be abandoned in PALM on September 3, 2004. An Office action was mailed on December 17, 2003. The application was presumably abandoned for failure to file a proper reply to the Office action mailed on December 17, 2003.

Petitioner asserts that the Office action was never received. It is clear that the Office action was never received because it was mailed to an incorrect address. On January 12, 2004, the Office action was returned to the USPTO from the law firm located at the incorrect address. It was returned with a note stating "(e)nclosed please find document listed below that was mailed to our firm which **does not** appear to belong to us." A review of the present file indicated that the correspondence address was improperly changed due to some documents that were inappropriately matched with the present file. The wrong inventors were also incorrectly listed due to these inappropriately matched documents. These documents have been removed from the present file and matched with their correct file. The correspondence address and the inventors associated with the present file have been corrected.

For the above stated reason, the petition is granted and the holding of abandonment is **WITHDRAWN**.

The Office action of December 17, 2003 will be remailed to the correct correspondence

address restarting the time period for response. The facsimile and telephone numbers as well as other contact information on the Office action has been updated in ink.

Any inquiries regarding this decision should be directed to Edward Westin at (571) 272-1638.

Richard K. Seidel, Director
Technology Center 2800
Semiconductors, Electrical and Optical
Systems and Components

UNITED STATES PATENT AND TRADEMARK OFFICE

Commissioner for Patents
United States Patent and Trademark Office
P.O. Box 1450
Alexandria, VA 22313-1450
www.uspto.gov

Paper No. 21

LEONTARIDIS ATHANASIOS
DIPILING V MANTZIKAS
68 SOLONOS STREET
ATHENS 106 8-0 GR GREECE

MAILED

FEB 17 2009

OFFICE OF PETITIONS

In re Application of	:	
Leontaridis Athanasios	:	
Application No. 10/018,998	:	ON PETITION
Filed: December 26, 2001	:	
Attorney Docket No. 214	:	

This is a decision on the renewed petition under the unintentional provisions of 37 CFR 1.137(b), filed November 12, 2008, to revive the above-identified application.

The petition is **DISMISSED**.

This application became abandoned for failure to timely respond to the Notice of Allowance and Fee(s) Due and the Notice of Allowability, mailed November 19, 2003. On June 11, 2007 a petition under 1.137(b) was filed. The petition was dismissed in a decision mailed October 31, 2007. In response on December 3, 2007 the present petition was filed. The petition was dismissed again in a decision mailed on February 15, 2008. In response on April 15, 2008 this petition was filed.

A grantable petition under 37 CFR 1.137(b) must be accompanied by: (1) the required reply, unless previously filed; (2) the petition fee as set forth in 37 CFR 1.17(m); (3) a statement that the entire delay in filing the required reply from the due date for the reply until the filing of a grantable petition pursuant to 37 CFR 1.137(b) was unintentional; and (4) any terminal disclaimer (and fee as set forth in 37 CFR 1.20(d)) required by 37 CFR 1.137(d). Where there is a question as to whether either the abandonment or the delay in filing a petition under 37 CFR 1.137 was unintentional, the Director may require additional information. See MPEP 711.03(c)(II)(C) and (D). The instant petition lacks item(s) (3).

Although petitioner supplied the required statement of unintentional, the petition filed November 12, 2008 is lacking the required signature of the petitioner or appointed attorney.

There is no indication that the person signing the instant petition was ever given power of attorney or authorization of agent to prosecute the above-identified application. In accordance with 37 CFR 1.34(a), the signature appearing on the petition shall constitute a representation to the United states Patent and Trademark Office that he/she is authorized to represent the particular party on whose behalf he/she acts. However, if petitioner desires to receive future correspondence regarding this application, the appropriate power of attorney or authorization of agent must be submitted. A courtesy copy of this decision is being mailed to petitioner. Nevertheless, all future correspondence regarding this application file will be directed solely to the address of record until otherwise instructed.

The application file does not indicate a change of address has been filed in this case, although the address given on the petition differs from the address of record. If appropriate, a change of address should be filed in this case in accordance with MPEP 601.03.

The petition has been reconsidered however petitioner has not yet proven unintentional delay.

Any request for reconsideration of this decision must be submitted within **TWO (2) MONTHS** from the mail date of this decision. Extensions of time under 37 CFR 1.136(a) are permitted. The reconsideration request should include a cover letter entitled "Renewed Petition under 37 CFR 1.137(b)." This is **not** a final agency action within the meaning of 5 U.S.C. § 704.

Further correspondence with respect to this matter should be addressed as follows:

By Mail: Mail Stop PETITION
Commissioner for Patents
P. O. Box 1450
Alexandria, VA 22313-1450

By hand: U. S. Patent and Trademark Office
Customer Service Window, Mail Stop Petitions
Randolph Building
401 Dulany Street
Alexandria, VA 22314

The centralized facsimile number is **(571) 273-8300.**

Telephone inquiries concerning this decision should be directed to the undersigned at (571) 272-1642.

April M. Wise
Petitions Examiner
Office of Petitions

cc: ATHANASIOS LEONTARIDIS
BOSPOROU 61
ATHENS, 171 24 NEA SMIMI, GREECE

cc: WENDY M. SLADE
DOWELL & DOWELL, PC
2111 EISENHOWER AVENUE
SUITE 406
ALEXANDRIA, VA 22314

UNITED STATES PATENT AND TRADEMARK OFFICE

Commissioner for Patents
United States Patent and Trademark Office
P.O. Box 1450
Alexandria, VA 22313-1450
www.uspto.gov

Paper No. 15

LEONTARIDIS ATHANASIOS
DIPILING V MANTZIKAS
68 SOLONOS STREET
ATHENS 106 8-0 GR GREECE

COPY MAILED

OCT 3 1 2007

OFFICE OF PETITIONS

In re Application of	:	
Leontaridis Athanasios	:	
Application No. 10/018,998	:	DECISION ON PETITION
Filed: December 26, 2001	:	
Attorney Docket No. 214	:	

This is a decision on the petition under the unintentional provisions of 37 CFR 1.137(b), filed June 11, 2007, to revive the above-identified application.

The petition is **DISMISSED**.

This application became abandoned for failure to timely pay the issue fee and to submit corrected formal drawings on or before February 19, 2004, as required by the Notice of Allowance and Fee(s) Due and the Notice of Allowability, mailed November 19, 2003. Accordingly, the date of abandonment of this application is February 20, 2004. A Notice of Abandonment was mailed on March 25, 2004.

A grantable petition under 37 CFR 1.137(b) must be accompanied by: (1) the required reply, unless previously filed; (2) the petition fee as set forth in 37 CFR 1.17(m); (3) a statement that the entire delay in filing the required reply from the due date for the reply until the filing of a grantable petition pursuant to 37 CFR 1.137(b) was unintentional; and (4) any terminal disclaimer (and fee as set forth in 37 CFR 1.20(d)) required by 37 CFR 1.137(d). Where there is a question as to whether either the abandonment or the delay in filing a petition under 37 CFR 1.137 was unintentional, the Director may require additional information. *See* MPEP 711.03(c)(II)(C) and (D). The instant petition lacks item (3).

There are three periods to be considered during the evaluation of a petition under 37 CFR 1.137(b):

(1) the delay in reply that originally resulted in the abandonment;

(2) the delay in filing an initial petition pursuant to 37 CFR 1.137(b) to revive the application; and

(3) the delay in filing a grantable petition pursuant to 37 CFR 1.137(b) to revive the application.

Currently, the delay has not been shown to the satisfaction of the Director to be unintentional for periods (1) and (2).

As to Period (1):

The patent statute at 35 U.S.C. § 41(a)(7) authorizes the Director to revive an "unintentionally abandoned application." The legislative history of Public Law 97-247 reveals that the purpose of 35 U.S.C. § 41(a)(7) is to permit the Office to have more discretion than in 35 U.S.C. §§ 133 or 151 to revive abandoned applications in appropriate circumstances, but places a limit on this discretion, stating that "[u]nder this section a petition accompanied by either a fee of $500 or a fee of $50 **would not be granted where the abandonment** or the failure to pay the fee for issuing the patent **was intentional** as opposed to being unintentional or unavoidable." [emphasis added]. See H.R. Rep. No. 542, 97th Cong., 2d Sess. 6-7 (1982), *reprinted in* 1982 U.S.C.C.A.N. 770-71. The revival of an intentionally abandoned application is antithetical to the meaning and intent of the statute and regulation.

35 U.S.C. § 41(a)(7) authorizes the Director to accept a petition "for the revival of an unintentionally abandoned application for a patent." As amended December 1, 1997, 37 CFR 1.137(b)(3) provides that a petition under 37 CFR 1.137(b) must be accompanied by a statement that the delay was unintentional, but provides that "[t]he Commissioner may require additional information where there is a question whether the delay was unintentional." Where, as here, there is a question whether the initial delay was unintentional, the petitioner must meet the burden of establishing that the delay was unintentional within the meaning of 35 U.S.C. § 41(a)(7) and 37 CFR 1.137(b). *See* In re Application of G, 11 USPQ2d 1378, 1380 (Comm'r Pats. 1989); 37 CFR 1.137(b). Here, in view of the inordinate delay in resuming prosecution, there is a question whether the entire delay was unintentional. Petitioner should note that the issue is not whether some of the delay was unintentional by any party; rather, the issue is whether the entire delay has been shown to the satisfaction of the Director to be unintentional.

The question under 37 CFR 1.137(b) for period (1) is whether the delay on the part of the party having the right or authority to reply to avoid abandonment (or not reply) was unintentional. Accordingly, any renewed petition must state what efforts were made by applicant to timely reply to the outstanding Notices of November 19, 2003. If no effort was made to further reply, then applicant must explain why the delay in this application does not result from a deliberate course of action (or inaction). As the courts have made clear, it is pointless for the USPTO to revive a long abandoned application without an adequate showing that the delay did not result from a deliberate course of action. *See* Lawman Armor v. Simon, 2005 U.S. Dist. LEXIS 10843, 74 USPQ2d 1633 (DC EMich 2005); Field Hybrids, LLC v.

Toyota Motor Corp., 2005 U.S. Dist. LEXIS 1159 (D. Minn Jan. 27, 2005); Lumenyte Int'l Corp. v. Cable Lite Corp., Nos. 96-1011, 96-1077, 1996 U.S. App. LEXIS 16400, 1996 WL 383927 (Fed. Cir. July 9, 1996) (unpublished) (patents held unenforceable due to a finding of inequitable conduct in submitting an inappropriate statement that the abandonment was unintentional).

As to Period (2):

Further, where the applicant deliberately chooses not to seek or persist in seeking the revival of an abandoned application, or where the applicant deliberately chooses to delay seeking the revival of an abandoned application, the resulting delay in seeking revival of the abandoned application cannot be considered as "unintentional" within the meaning of 37 CFR 1.137(b). *See* MPEP 711.03(c).

The language of both 35 U.S.C. § 41(a)(7) and 37 CFR 1.137(b) are clear and unambiguous, and, furthermore, without qualification. That is, the delay in filing the reply during prosecution, as well as in filing the petition seeking revival, must have been, without qualification, "unintentional" for the reply to now be accepted on petition. The Office requires that the entire delay be at least unintentional as a prerequisite to revival of an abandoned application to prevent abuse and injury to the public. *See* H.R. Rep. No. 542, 97th Cong., 2d Sess. 7 (1982), reprinted in 1982 U.S.C.C.A.N. 771 ("[i]n order to prevent abuse and injury to the public the Commissioner . . . could require applicants to act promptly after becoming aware of the abandonment"). The December 1997 change to 37 CFR 1.137 did not create any new right to overcome an intentional delay in seeking revival, or in renewing an attempt at seeking revival, of an abandoned application. *See* Changes to Patent Practice and Procedure; Final Rule Notice, 62 Fed. Reg. 53131, 53160 (October 10, 1997), 1203 Off. Gaz. Pat. Office 63, 87 (October 21, 1997), which clearly stated that any protracted delay (here, over 3 years) could trigger, as here, a request for additional information. As the courts have since made clear, a protracted delay in seeking revival, as here, requires a petitioner's detailed explanation seeking to excuse the delay as opposed to USPTO acceptance of a general allegation of unintentional delay. *See* Lawman Armor v. Simon, 2005 U.S. Dist. LEXIS 10843, 74 USPQ2d 1633, at 1637-8 (DC EMich 2005); Field Hybrids, LLC v. Toyota Motor Corp., 2005 U.S. Dist. LEXIS 1159 (D. Minn Jan. 27, 2005) at *21-*23. Statements are required from applicant regarding the circumstances surrounding the protracted delay, after the abandonment date, in seeking revival.

As noted in MPEP 711.03(c)(II), subsection D, in instances in which such petition was not filed within 1 year of the date of abandonment of the application, applicants should include:

> (A) the date that the applicant first became aware of the abandonment of the application; and
> (B) a showing as to how the delay in discovering the abandoned status of the application occurred despite the exercise of due care or diligence on the part of the applicant.

In either instance, applicant's failure to carry the burden of proof to establish that the "entire" delay was "unavoidable" or "unintentional" may lead to the denial of a petition under 37 CFR 1.137(b), regardless of the circumstances that originally resulted in the abandonment of the application. *See also* New York University v. Autodesk, 2007 U.S. DIST LEXIS, U.S.District LEXIS 50832, *10 -*12 (S.D.N.Y. 2007)(protracted delay in seeking revival undercuts assertion of unintentional delay).

A further review of the record shows that applicant filed a "Power of Attorney to Inspect, Make Copies and Sign Documents" on December 28, 2005 for the purpose of filing a petition to revive this application. While the petition to revive by applicant received on June 11, 2007 has a date of execution thereon of December 15, 2005, the file record fails to disclose receipt of any such petition. There is also no indication or proof that petitioner made any attempt to pay the issue fee and submit drawings promptly after an inspection of the file was conducted. Therefore, applicant must provide an explanation surrounding the delay in promptly filing a petition to revive this application promptly after becoming aware of the abandoned status of this application, which should have been shortly after the filing of the December 28, 2005 power to inspect.

Any request for reconsideration of this decision must be submitted within TWO (2) MONTHS from the mail date of this decision. Extensions of time under 37 CFR 1.136(a) are permitted. The reconsideration request should include a cover letter entitled "Renewed Petition under 37 CFR 1.137(b)." This is **not** a final agency action within the meaning of 5 U.S.C. § 704.

The application file does not indicate a change of address has been filed in this case, although the address given on the petition differs from the address of record. If appropriate, a change of address should be filed in this case in accordance with MPEP 601.03. A courtesy copy of this decision is being mailed to the address noted on the petition. However, until otherwise instructed, all future correspondence regarding this application will be mailed solely to the address of record.

Any renewed petition may be addressed as follows:

By Mail:
Mail Stop PETITION
Commissioner for Patents
P. O. Box 1450
Alexandria, VA 22313-1450

By hand:
U. S. Patent and Trademark Office
Customer Service Window, Mail Stop Petitions
Randolph Building
401 Dulany Street
Alexandria, VA 22314

The centralized facsimile number is **(571) 273-8300.**

Correspondence regarding this decision may also be filed through the electronic filing system of the USPTO.

Telephone inquiries concerning this decision should be directed to the undersigned at (571) 272-1642.

April M. Wise
Petitions Examiner
Office of Petitions

cc:

Athanasios Leontaridis
Vosporou 61
Athens, 171 24 Nea Smimi, Greece

UNITED STATES PATENT AND TRADEMARK OFFICE

Commissioner for Patents
United States Patent and Trademark Office
P.O. Box 1450
Alexandria, VA 22313-1450
www.uspto.gov

Paper No. 17

LEONTARIDIS ATHANASIOS
DIPILING V MANTZIKAS
68 SOLONOS STREET
ATHENS 106 8-0 GR GREECE

COPY MAILED

FEB 15 2008

In re Application of	:	
Leontaridis Athanasios	:	
Application No. 10/018,998	:	ON PETITION
Filed: December 26, 2001	:	
Attorney Docket No. 214	:	

This is a decision on the renewed petition under the unintentional provisions of 37 CFR 1.137(b), filed December 3, 2007, to revive the above-identified application.

The petition is **DISMISSED**.

This application became abandoned for failure to timely respond to the Notice of Allowance and Fee(s) Due and the Notice of Allowability, mailed November 19, 2003. On June 11, 2007 a petition under 1.137(b) was filed. The petition was dismissed in a decision mailed October 31, 2007. In response on December 3, 2007 the present petition was filed.

A grantable petition under 37 CFR 1.137(b) must be accompanied by: (1) the required reply, unless previously filed; (2) the petition fee as set forth in 37 CFR 1.17(m); (3) a statement that the entire delay in filing the required reply from the due date for the reply until the filing of a grantable petition pursuant to 37 CFR 1.137(b) was unintentional; and (4) any terminal disclaimer (and fee as set forth in 37 CFR 1.20(d)) required by 37 CFR 1.137(d). Where there is a question as to whether either the abandonment or the delay in filing a petition under 37 CFR 1.137 was unintentional, the Director may require additional information. *See* MPEP 711.03(c)(II)(C) and (D). The instant petition lacks item (3).

35 U.S.C. § 41(a)(7) authorizes the Director to accept a petition "for the revival of an unintentionally abandoned application for a patent." As amended December 1, 1997, 37 CFR 1.137(b)(3) provides that a petition under 37 CFR 1.137(b) must be accompanied by a statement that the delay was unintentional, but provides that "[t]he Commissioner may require additional

information where there is a question whether the delay was unintentional." Where, as here, there is a question whether the initial delay was unintentional, the petitioner must meet the burden of establishing that the delay was unintentional within the meaning of 35 U.S.C. § 41(a)(7) and 37 CFR 1.137(b). *See* In re Application of G, 11 USPQ2d 1378, 1380 (Comm'r Pats. 1989); 37 CFR 1.137(b). Here, in view of the inordinate delay (almost 3 ½ years) in resuming prosecution, there is a question whether the entire delay was unintentional.

Accordingly, any renewed petition must clearly identify the party having the right to reply to avoid abandonment on February 20, 2004. That party, in turn must explain what effort(s) was made to further reply to the outstanding Office action and, further, why no reply was filed. If no effort was made to further reply, then that party must explain why the delay in this application does not result from a deliberate course of action (or inaction). Likewise, as Mr. Athanasios was responsible for the application at the time of abandonment, he should explain why this application became abandoned while it was under his control and what efforts were made to reply and with whom this matter was discussed outside of all parties involved. Applicant also states that there was a foreign representative associated with this application. Copies of any correspondence relating to the filing, or not filing a further reply to the outstanding Office action are required from responsible person(s), Mr. Athanasios and whoever else was involved with this application at the time of abandonment. Statements are required from any and all persons responsible and having firsthand knowledge of the circumstances surrounding the lack of a reply to the outstanding Office action. As the courts have made clear, it is pointless for the USPTO to revive a long abandoned application without an adequate showing that the delay did not result from a deliberate course of action. See Lawman Armor v. Simon, 2005 U.S. Dist. LEXIS 10843, 74 USPQ2d 1633 (DC EMich 2005); Field Hybrids, LLC v. Toyota Motor Corp., 2005 U.S. Dist. LEXIS 1159 (D. Minn Jan. 27, 2005); Lumenyte Int'l Corp. v. Cable Lite Corp., Nos. 96-1011, 96-1077, 1996 U.S. App. LEXIS 16400, 1996 WL 383927 (Fed. Cir. July 9, 1996) (unpublished) (patents held unenforceable due to a finding of inequitable conduct in submitting an inappropriate statement that the abandonment was unintentional).

The language of both 35 U.S.C. § 41(a)(7) and 37 CFR 1.137(b) are clear and unambiguous, and, furthermore, without qualification. That is, the delay in filing the reply during prosecution, as well as in filing the petition seeking revival, must have been, without qualification, "unintentional" for the reply to now be accepted on petition. The Office requires that the entire delay be at least unintentional as a prerequisite to revival of an abandoned application to prevent abuse and injury to the public. *See* H.R. Rep. No. 542, 97th Cong., 2d Sess. 7 (1982), reprinted in 1982 U.S.C.C.A.N. 771 ("[i]n order to prevent abuse and injury to the public the Commissioner . . . could require applicants to act promptly after becoming aware of the abandonment"). As noted previously, the December 1997 change to 37 CFR 1.137 did not create any new right to overcome an intentional delay in seeking revival, or in renewing an attempt at seeking revival, of an abandoned application. *See* Changes to Patent Practice and Procedure; Final Rule Notice, 62 Fed. Reg. 53131, 53160 (October 10, 1997), 1203 Off. Gaz. Pat. Office 63, 87 (October 21, 1997). Statements are required from any and all persons having firsthand knowledge of the circumstances surrounding the protracted delay, after the abandonment date, in seeking revival. Petitioner asserts that an agent made several attempts to determine the status of the application. However, a review of the records shows that a Power to inspect and make copies was filed on

December 28, 2005. Therefore, petitioner must explain what actions were taken from December 28, 2005 up until the date the petition was filed on June 11, 2007. Petitioner must provide specific dates as to when any and all attempts were made to contact the Office about the status of the application.

There is no indication that the person signing the instant petition was ever given power of attorney or authorization of agent to prosecute the above-identified application. In accordance with 37 CFR 1.34(a), the signature appearing on the petition shall constitute a representation to the United states Patent and Trademark Office that he/she is authorized to represent the particular party on whose behalf he/she acts. However, if petitioner desires to receive future correspondence regarding this application, the appropriate power of attorney or authorization of agent must be submitted. A courtesy copy of this decision is being mailed to petitioner. Nevertheless, all future correspondence regarding this application file will be directed solely to the address of record until otherwise instructed.

The application file does not indicate a change of address has been filed in this case, although the address given on the petition differs from the address of record. If appropriate, a change of address should be filed in this case in accordance with MPEP 601.03.

The petition has been reconsidered, but the results are the same.

Any further request for reconsideration of this decision must be submitted within **TWO (2) MONTHS** from the mail date of this decision. Extensions of time under 37 CFR 1.136(a) are permitted. The reconsideration request should include a cover letter entitled "Renewed Petition under 37 CFR 1.137(b)." This is **not** a final agency action within the meaning of 5 U.S.C. § 704.

Any renewed petition may be addressed as follows:

By Mail: Mail Stop PETITION
Commissioner for Patents
P. O. Box 1450
Alexandria, VA 22313-1450

By hand: U. S. Patent and Trademark Office
Customer Service Window, Mail Stop Petitions
Randolph Building
401 Dulany Street
Alexandria, VA 22314

The centralized facsimile number is **(571) 273-8300.**

Correspondence regarding this decision may also be filed through the electronic filing system of the USPTO.

To expedite consideration, petitioner may wish to contact the undersigned regarding the filing of the renewed petition under 37 CFR 1.137(b).

Telephone inquiries concerning this decision should be directed to the undersigned at (571) 272-1642.

April M. Wise
Petitions Examiner
Office of Petitions

cc: ATHANASIOS LEONTARIDIS
BOSPOROU 61
ATHENS, 171 24 NEA SMIMI, GREECE

cc: WENDY M. SLADE
DOWELL & DOWELL, PC
2111 EISENHOWER AVENUE
SUITE 406
ALEXANDRIA, VA 22314

UNITED STATES PATENT AND TRADEMARK OFFICE

Commissioner for Patents
United States Patent and Trademark Office
P.O. Box 1450
Alexandria, VA 22313-1450
www.uspto.gov

Paper No. 19

LEONTARIDIS ATHANASIOS
DIPILING V MANTZIKAS
68 SOLONOS STREET
ATHENS 106 8-0 GR GREECE

COPY MAILED
SEP 11 2008

In re Application of	:	
Leontaridis Athanasios	:	
Application No. 10/018,998	:	ON PETITION
Filed: December 26, 2001	:	
Attorney Docket No. 214	:	

This is a decision on the renewed petition under the unintentional provisions of 37 CFR 1.137(b), filed April 15, 2008, to revive the above-identified application.

The petition is **DISMISSED**.

This application became abandoned for failure to timely respond to the Notice of Allowance and Fee(s) Due and the Notice of Allowability, mailed November 19, 2003. On June 11, 2007 a petition under 1.137(b) was filed. The petition was dismissed in a decision mailed October 31, 2007. In response on December 3, 2007 the present petition was filed. The petition was dismissed again in a decision mailed on February 15, 2008. In response on April 15, 2008 this petition was filed.

A grantable petition under 37 CFR 1.137(b) must be accompanied by: (1) the required reply, unless previously filed; (2) the petition fee as set forth in 37 CFR 1.17(m); (3) a statement that the entire delay in filing the required reply from the due date for the reply until the filing of a grantable petition pursuant to 37 CFR 1.137(b) was unintentional; and (4) any terminal disclaimer (and fee as set forth in 37 CFR 1.20(d)) required by 37 CFR 1.137(d). Where there is a question as to whether either the abandonment or the delay in filing a petition under 37 CFR 1.137 was unintentional, the Director may require additional information. See MPEP 711.03(c)(II)(C) and (D). The instant petition lacks item(s) (3).

When did applicant first become aware of the abandoned status of the instant application? Petition must provide copies of any correspondence between applicant and themselves so the Office may ascertain whether or not there was any intentional delay.

There is no indication that the person signing the instant petition was ever given power of attorney or authorization of agent to prosecute the above-identified application. In accordance with 37 CFR 1.34(a), the signature appearing on the petition shall constitute a representation to the United states Patent and Trademark Office that he/she is authorized to represent the particular party on whose behalf he/she acts. However, if petitioner desires to receive future correspondence regarding this application, the appropriate power of attorney or authorization of agent must be submitted. A courtesy copy of this decision is being mailed to petitioner. Nevertheless, all future correspondence regarding this application file will be directed solely to the address of record until otherwise instructed.

The application file does not indicate a change of address has been filed in this case, although the address given on the petition differs from the address of record. If appropriate, a change of address should be filed in this case in accordance with MPEP 601.03.

The petition has been reconsidered however, petitioner has not yet proven unintentional delay.

Any request for reconsideration of this decision must be submitted within **TWO (2) MONTHS** from the mail date of this decision. Extensions of time under 37 CFR 1.136(a) are permitted. The reconsideration request should include a cover letter entitled "Renewed Petition under 37 CFR 1.137(b)." This is **not** a final agency action within the meaning of 5 U.S.C. § 704.

Further correspondence with respect to this matter should be addressed as follows:

By Mail: Mail Stop PETITION
Commissioner for Patents
P. O. Box 1450
Alexandria, VA 22313-1450

By hand: U. S. Patent and Trademark Office
Customer Service Window, Mail Stop Petitions
Randolph Building
401 Dulany Street
Alexandria, VA 22314

The centralized facsimile number is **(571) 273-8300.**

Telephone inquiries concerning this decision should be directed to the undersigned at (571) 272-1642.

April M. Wise
Petitions Examiner
Office of Petitions

cc: ATHANASIOS LEONTARIDIS
BOSPOROU 61
ATHENS, 171 24 NEA SMIMI, GREECE

cc: WENDY M. SLADE
DOWELL & DOWELL, PC
2111 EISENHOWER AVENUE
SUITE 406
ALEXANDRIA, VA 22314

UNITED STATES PATENT AND TRADEMARK OFFICE

2-13-09

Commissioner for Patents
United States Patent and Trademark Office
P.O. Box 1450
Alexandria, VA 22313-1450
www.uspto.gov

Paper No. 21

LEONTARIDIS ATHANASIOS
DIPILING V MANTZIKAS
68 SOLONOS STREET
ATHENS 106 8-0 GR GREECE

In re Application of	:	
Leontaridis Athanasios	:	
Application No. 10/018,998	:	ON PETITION
Filed: December 26, 2001	:	
Attorney Docket No. 214	:	

This is a decision on the renewed petition under the unintentional provisions of 37 CFR 1.137(b), filed November 12, 2008, to revive the above-identified application.

The petition is **DISMISSED**.

This application became abandoned for failure to timely respond to the Notice of Allowance and Fee(s) Due and the Notice of Allowability, mailed November 19, 2003. On June 11, 2007 a petition under 1.137(b) was filed. The petition was dismissed in a decision mailed October 31, 2007. In response on December 3, 2007 the present petition was filed. The petition was dismissed again in a decision mailed on February 15, 2008. In response on April 15, 2008 this petition was filed.

A grantable petition under 37 CFR 1.137(b) must be accompanied by: (1) the required reply, unless previously filed; (2) the petition fee as set forth in 37 CFR 1.17(m); (3) a statement that the entire delay in filing the required reply from the due date for the reply until the filing of a grantable petition pursuant to 37 CFR 1.137(b) was unintentional; and (4) any terminal disclaimer (and fee as set forth in 37 CFR 1.20(d)) required by 37 CFR 1.137(d). Where there is a question as to whether either the abandonment or the delay in filing a petition under 37 CFR 1.137 was unintentional, the Director may require additional information. See MPEP 711.03(c)(II)(C) and (D). The instant petition lacks item(s) (3).

Although petitioner supplied the required statement of unintentional, the petition filed November 12, 2008 is lacking the required signature of the petitioner or appointed attorney.

There is no indication that the person signing the instant petition was ever given power of attorney or authorization of agent to prosecute the above-identified application. In accordance with 37 CFR 1.34(a), the signature appearing on the petition shall constitute a representation to the United states Patent and Trademark Office that he/she is authorized to represent the particular party on whose behalf he/she acts. However, if petitioner desires to receive future correspondence regarding this application, the appropriate power of attorney or authorization of agent must be submitted. A courtesy copy of this decision is being mailed to petitioner. Nevertheless, all future correspondence regarding this application file will be directed solely to the address of record until otherwise instructed.

The application file does not indicate a change of address has been filed in this case, although the address given on the petition differs from the address of record. If appropriate, a change of address should be filed in this case in accordance with MPEP 601.03.

The petition has been reconsidered however petitioner has not yet proven unintentional delay.

Any request for reconsideration of this decision must be submitted within **TWO (2) MONTHS** from the mail date of this decision. Extensions of time under 37 CFR 1.136(a) are permitted. The reconsideration request should include a cover letter entitled "Renewed Petition under 37 CFR 1.137(b)." This is **not** a final agency action within the meaning of 5 U.S.C. § 704.

Further correspondence with respect to this matter should be addressed as follows:

By Mail: Mail Stop PETITION
Commissioner for Patents
P. O. Box 1450
Alexandria, VA 22313-1450

By hand: U. S. Patent and Trademark Office
Customer Service Window, Mail Stop Petitions
Randolph Building
401 Dulany Street
Alexandria, VA 22314

The centralized facsimile number is **(571) 273-8300.**

Telephone inquiries concerning this decision should be directed to the undersigned at (571) 272-1642.

April M. Wise
Petitions Examiner
Office of Petitions

cc: ATHANASIOS LEONTARIDIS
BOSPOROU 61
ATHENS, 171 24 NEA SMIMI, GREECE

cc: WENDY M. SLADE
DOWELL & DOWELL, PC
2111 EISENHOWER AVENUE
SUITE 406
ALEXANDRIA, VA 22314

UNITED STATES PATENT AND TRADEMARK OFFICE

Commissioner for Patents
United States Patent and Trademark Office
P.O. Box 1450
Alexandria, VA 22313-1450
www.uspto.gov

Paper No. 24

RALPH A. DOWELL OF
DOWELL & DOWELL, PC
2111 EISENHOWER AVE
SUITE 406
ALEXANDRIA, VA 22314

COPY MAILED

MAY 29 2009

OFFICE OF PETITIONS

In re Application of	:	
Leontaridis Athanasios	:	
Application No. 10/018,998	:	DECISION ON PETITION
Filed: December 26, 2001	:	
Attorney Docket No. LEONAPP	:	

This is a decision on the renewed petition under the unintentional provisions of 37 CFR 1.137(b), filed April 17, 2009, to revive the above-identified application.

It is not apparent whether the statement of unintentional delay was signed by a person who would have been in a position of knowing that the entire delay in filing the required reply from the due date for the reply until the filing of a grantable petition pursuant to 37 CFR 1.137(b) was unintentional. Nevertheless, in accordance with 37 CFR 10.18, the statement is accepted as constituting a certification of unintentional delay. However, in the event that petitioner has no knowledge that the delay was unintentional, petitioner must make such an inquiry to ascertain that, in fact, the delay was unintentional. If petitioner discovers that the delay was intentional, petitioner must so notify the Office.

This application became abandoned for failure to timely pay the issue and publication fees and to submit corrected formal drawings on or before February 19, 2004, as required by the Notice of Allowance and Fee(s) Due and the Notice of Allowability, mailed November 19, 2003. On June 11, 2007 a petition under 1.137(b) was filed. The petition was dismissed in a decision mailed October 31, 2007. In response, on December 3, 2007 a second petition was filed. The petition was dismissed again in a decision mailed on February 15, 2008. In response, on April 15, 2008 a third petition was filed and again dismissed in a decision mailed September 11, 2008. In response on November 12, 2008 a fourth petition was filed. The petition was dismissed in a decision mailed February 13, 2009. In response, on April 17, 2009 this petition was filed.

The petition satisfies the requirements of 37 CFR 1.137(b) in that petitioner has supplied (1) the reply in the form of payment of the issue fee of $700 , the publication fee of $300, and corrected formal drawings , (2) the petition fee of $750; and (3) a proper statement of unintentional delay.

The petition is **GRANTED**.

The drawings have been approved by the USPTO draftsperson.

Telephone inquiries concerning this decision should be directed to undersigned at (571) 272-1642. All other inquiries concerning this application should be directed to the Office of Data Management at their hotline 571-272-4200.

This application is being referred to Office of Data Management for processing into a patent.

April M. Wise
Petitions Examiner
Office of Petitions

UNITED STATES PATENT AND TRADEMARK OFFICE

COMMISSIONER FOR PATENTS
UNITED STATES PATENT AND TRADEMARK OFFICE
WASHINGTON, D.C. 20231
www.uspto.gov

Paper No. 8

OBLON, SPIVAK, MCCLELLAND, MAIER & NEUSTADT, P.C.
1940 DUKE STREET
ALEXANDRIA, VA 22314

MAILED

JUN 10 2003

Director's Office
Group 3700

In re Application of
IRITANI ET AL.
Application No.: 10/019,019
Filed: December 26, 2001

: DECISION ON
: PETITION UNDER
: 37 CFR 1.181
:

This is a decision on the petition filed May 28, 2003 to invoke supervisory authority under 37 CFR 1.181. Accompanying the petition is a stamped post card receipt with a receipt in filing date of January 15, 2003, comments on statement of reasons for allowance and an amendment after allowance under 37 CFR 1.312.

The petition is dismissed as moot.

Since a Notice of Withdrawal from Issue under 37 CFR 1.313 was mailed on June 3, 2003, reconsideration of the reasons for allowance is moot. Since the prosecution of this application is being reopened, the amendment after allowance under 37 CFR 1.312 will be entered as a matter of right.

The application is being forwarded to the examiner for action.

Richard A. Bertsch
Director
Technology Center 3700

#15

UNITED STATES PATENT AND TRADEMARK OFFICE

COMMISSIONER FOR PATENTS
UNITED STATES PATENT AND TRADEMARK OFFICE
P.O. BOX 1450
ALEXANDRIA, VA 22313-1450
www.uspto.gov

OBLON, SPIVAK, MCCLELLAND, MAIER & NEUSTADT, P.C.
1940 DUKE STREET
ALEXANDRIA, VA 22314

COPY MAILED

MAY 2 0 2004

OFFICE OF PETITIONS

ON PETITION

In re Application of
Yoichiro Iritani, et al. :
Application No. 10/019,019 :
Filed: December 26, 2001 :
Attorney Docket No. 21683$5US3PCT :

This is a decision on the petition under 37 CFR 1.313(c)(2) to withdraw the above-identified application from issue after payment of the issue fee, filed May 19, 2004.

The petition is **GRANTED.**

The above-identified application is withdrawn from issue for consideration of a submission under 37 CFR 1.114 (request for continued examination). See 37 CFR 1.313(c)(2).

Petitioner is advised that the issue fee paid, December 24, 2003, in the above-identified application cannot be refunded. If, however, the above-identified application is again allowed, petitioner may request that it be applied towards the issue fee required by the new Notice of Allowance. [1]

Telephone inquiries relating to this decision should be directed to the undersigned at (703) 305-9220.

The application is being forwarded to Technology Center 3744 for further processing of the request for continued examination under 37 CFR 1.114.

Sherry D. Brinkley
Sherry D. Brinkley
Petitions Examiner
Office of Petitions
Office of the Deputy Commissioner
for Patent Examination Policy

RECEIVED: 5-21-04
OBLON, SPIVAK, McCLELLAND
MAIER & NEUSTADT, P.C.
DOCKETING DEPT
Initials/Date Docketed: 5-21-04
Type of Resp(s): _____
Due Date(s): _____

[1] The request to apply the issue fee to the new Notice may be satisfied by completing and returning the new Issue Fee Transmittal Form PTOL-85(b), which includes the following language thereon: "Commissioner for Patents is requested to apply the Issue Fee and Publication Fee (if any) or re-apply any previously paid issue fee to the application identified above." Petitioner is advised that, whether a fee is indicated as being due or not, the Issue Fee Transmittal Form must be completed and timely submitted to avoid abandonment. Note the language in bold text on the first page of the Notice of Allowance and Fee(s) Due (PTOL-85).

COPY

Dept.: E/M

OSMM&N File No. 216835US3PCT By: GJM:RTP:MOM:psn

Serial No. 10/019,019

In the matter of the Application of: Yoichiro IRITANI, et al.

For: EVAPORATOR AND REFRIGERATOR

Due Date: N/A

The following has been received in the U.S. Patent Office on the date stamped hereon:

- ■ Dep. Acct. Order Form
- ■ Credit Card form for $ 900.00
- ■ Information Disclosure Statement ■ PTO-1449
- ■ Cited References 5
- ■ Petition to Withdraw from Issue Under 37 C.F.R. §1.313(c)(2)
- ■ Japanese Office Action w/ English translation
- ■ Request for Continued Examination (RCE) Transmittal

I:\ATTY\MOM\219\216835US\RCE FR.DOC

RECEIVED
MAY 1 9 2004
OFFICE OF PETITIONS

PC

COPY

OBLON
SPIVAK
McCLELLAND
MAIER
&
NEUSTADT
P.C.

ATTORNEYS AT LAW

1940 DUKE STREET
ALEXANDRIA, VIRGINIA 22314
USA

(703) 413-3000
(703) 413-2220 FACSIMILE

OBLONPAT@OBLON.COM

PATENT, TRADEMARK AND COPYRIGHT LAW
AND RELATED FEDERAL AND ITC LITIGATION

WWW.OBLON.COM

FACSIMILE

PLEASE CALL US AT (703) 413-3000 IF THE MESSAGE YOU RECEIVE IS INCOMPLETE OR NOT LEGIBLE

TO	NAME: Examiner Look	DATE: June 17, 2004
	COMPANY/FIRM: U. S. Patent & Trademark Office	FAX #: 703-746-4519
	NUMBER OF PAGES INCLUDING COVER: 8	CONFIRM FAX: ☐ YES ☐ NO
FROM	NAME: Serene Nacey	OUR REFERENCE: 216835US-3 PCT
	DIRECT PHONE #: 703-412-4537	YOUR REFERENCE: 10/019,019

MESSAGE

Pursuant to our telephone conversation today, please find attached signed copies of the papers filed on May 19, 2004 as well as the Statement that the Petition to Withdraw from Issue is Granted. If I can be of any further help, please do not hesitate to contact me.

Unless otherwise indicated or obvious from the nature of the transmittal, the information contained in this facsimile message is attorney privileged and confidential information intended for the use of the individual or entity named above. If the reader of this message is not the intended recipient or the employee or agent responsible to deliver it to the intended recipient, you are hereby notified that any dissemination, distribution or copying of this communication is strictly prohibited. If you have received this communication in error or are not sure whether it is privileged, please immediately notify us by telephone and return the original message to us at the above address via the U.S. Postal Service at our Expense. Thank You.

UNITED STATES PATENT AND TRADEMARK OFFICE

COMMISSIONER FOR PATENTS
UNITED STATES PATENT AND TRADEMARK OFFICE
P.O. BOX 1450
ALEXANDRIA, VA 22313-1450
www.uspto.gov

OIPE JC25
JUL 11 2005
PATENT & TRADEMARK OFFICE

OBLON, SPIVAK, MCCLELLAND, MAIER & NEUSTADT, P.C.
1940 DUKE STREET
ALEXANDRIA, VA 22314

COPY MAILED

MAY 2 0 2004

OFFICE OF PETITIONS

ON PETITION

In re Application of
Yoichiro Iritani, et al. :
Application No. 10/019,019 :
Filed: December 26, 2001 :
Attorney Docket No. 2168385US3PCT :

This is a decision on the petition under 37 CFR 1.313(c)(2) to withdraw the above-identified application from issue after payment of the issue fee, filed May 19, 2004.

The petition is **GRANTED**.

The above-identified application is withdrawn from issue for consideration of a submission under 37 CFR 1.114 (request for continued examination). See 37 CFR 1.313(c)(2).

Petitioner is advised that the issue fee paid, December 24, 2003, in the above-identified application cannot be refunded. If, however, the above-identified application is again allowed, petitioner may request that it be applied towards the issue fee required by the new Notice of Allowance. [1]

Telephone inquiries relating to this decision should be directed to the undersigned at (703) 305-9220.

The application is being forwarded to Technology Center 3744 for further processing of the request for continued examination under 37 CFR 1.114.

Sherry D. Brinkley
Petitions Examiner
Office of Petitions
Office of the Deputy Commissioner
for Patent Examination Policy

RECEIVED: 5/2/04
OBLON, SPIVAK, McCLELLAND
MAIER & NEUSTADT, P.C.
DOCKETING DEPT
Initials/Date Docketed: 5/2/04
Type of Resp(s): _____
Due Date(s): _____

[1] The request to apply the issue fee to the new Notice may be satisfied by completing and returning the new Issue Fee Transmittal Form PTOL-85(b), which includes the following language thereon: "Commissioner for Patents is requested to apply the Issue Fee and Publication Fee (if any) or re-apply any previously paid issue fee to the application identified above." Petitioner is advised that, whether a fee is indicated as being due or not, the Issue Fee Transmittal Form **must** be completed and timely submitted to avoid abandonment. Note the language in bold text on the first page of the Notice of Allowance and Fee(s) Due (PTOL-85).

UNITED STATES PATENT AND TRADEMARK OFFICE

COMMISSIONER FOR PATENTS
UNITED STATES PATENT AND TRADEMARK OFFICE
P.O. BOX 1450
ALEXANDRIA, VA 22313-1450
www.uspto.gov

OBLON, SPIVAK, MCCLELLAND, MAIER & NEUSTADT, P.C.
1940 DUKE STREET
ALEXANDRIA, VA 22314

COPY MAILED

MAY 2 0 2004

OFFICE OF PETITIONS

In re Application of
Yoichiro Iritani, et al. :
Application No. 10/019,019 :
Filed: December 26, 2001 :
Attorney Docket No. 2168385US3PCT :

ON PETITION

This is a decision on the petition under 37 CFR 1.313(c)(2) to withdraw the above-identified application from issue after payment of the issue fee, filed May 19, 2004.

The petition is **GRANTED**.

The above-identified application is withdrawn from issue for consideration of a submission under 37 CFR 1.114 (request for continued examination). See 37 CFR 1.313(c)(2).

Petitioner is advised that the issue fee paid, December 24, 2003, in the above-identified application cannot be refunded. If, however, the above-identified application is again allowed, petitioner may request that it be applied towards the issue fee required by the new Notice of Allowance. [1]

Telephone inquiries relating to this decision should be directed to the undersigned at (703) 305-9220.

The application is being forwarded to Technology Center 3744 for further processing of the request for continued examination under 37 CFR 1.114.

Sherry D. Brinkley
Petitions Examiner
Office of Petitions
Office of the Deputy Commissioner
for Patent Examination Policy

[1]The request to apply the issue fee to the new Notice may be satisfied by completing and returning the new Issue Fee Transmittal Form PTOL-85(b), which includes the following language thereon: "Commissioner for Patents is requested to apply the Issue Fee and Publication Fee (if any) or re-apply any previously paid issue fee to the application identified above." Petitioner is advised that, whether a fee is indicated as being due or not, the Issue Fee Transmittal Form **must** be completed and timely submitted to avoid abandonment. Note the language in bold text on the first page of the Notice of Allowance and Fee(s) Due (PTOL-85).

MAR 2 9 2002

UNITED STATES PATENT AND TRADEMARK OFFICE

COMMISSIONER FOR PATENTS
UNITED STATES PATENT AND TRADEMARK OFFICE
WASHINGTON, D.C. 20231
www.uspto.gov

Melissa A. Shaw
Bayer Corporation
800 Dwight Way
P.O. Box 1986
Berkeley, CA 94701

In re Application of Chen et al. Application No.: 10/019065 PCT No.: PCT/US01/10222 Int. Filing Date: 30 March 2001 Priority Date: 31 March 2000 Attorney Docket No.: MSB-7265-PCT-US For: Protein Having Activity As An Angiogenesis Monitor	DECISION ON PETITION UNDER 37 CFR 1.137(b)

This is a decision on applicant's petition under 37 CFR 1.137(b) filed on 07 December 2001.

BACKGROUND

This international application was filed on 30 March 2001 and claimed an earlier priority date of 31 March 2000. No Demand electing the United States was filed prior to the elapse of 19 months from the priority date. Consequently, the twenty period for payment of the basic national fee in the United States expired as of midnight on 31 November 2001. This application became abandoned with respect to the United States for failure to timely pay the basic national fee.

On 07 December 2001, applicants filed a Transmittal Letter accompanied by, *inter alia*, the instant petition.

DISCUSSION

A grantable petition to revive an abandoned application under 37 CFR 1.137(b) must be accompanied by (1) the required reply, unless previously filed; (2) the petition fee as set forth in § 1.17(m); (3) a statement that the entire delay in filing the required reply from the due date for the reply until the filing of a grantable petition pursuant to this paragraph was unintentional. The Commissioner may require additional information where there is a question whether the delay was unintentional; and (4) any terminal disclaimer (and fee as set forth in § 1.20 (d)) required pursuant to paragraph (c) of this section.

Regarding requirement (1), the petition is accompanied by the required reply in the form of an authorization to charge the basic national fee to counsel's deposit account.

Regarding requirement (2), the petition is accompanied by authorization to charge the petition fee to counsel's deposit account.

Regarding requirement (3), the petition includes an appropriate statement.

Regarding requirement (4), no terminal disclaimer is required because the international filing date of this application is later than 8 June 1995.

DECISION

The petition to revive the application abandoned under 35 U.S.C. 371(d) is **GRANTED** with respect to the national stage in the United States.

The declaration of the inventors accompanying the petition is defective in that the declaration names "Monte Wetzel" as an inventor, whereas the published international application names "Wetzel, Gayle, Delmonte."

This application is being forwarded to the United States Designated/Elected Office (DO/EO/US) for further processing, including the preparation and mailing of a Notification of Missing Requirements (Form PCT/DO/EO/905) requiring the filing of a properly executed oath or declaration and a surcharge under 37 CFR 1.492(e).

Leonard Smith
PCT Legal Examiner
PCT Legal Office

George Dombroske
PCT Legal Examiner
PCT Legal Office
Tel: (703) 308-6721
Fax: (703) 308-6459

UNITED STATES PATENT AND TRADEMARK OFFICE

Commissioner for Patents
United States Patent and Trademark Office
P.O. Box 1450
Alexandria, VA 22313-1450
www.uspto.gov

ROBERT D. FISH
RUTAN & TUCKER
611 ANTON BLVD 14TH FLOOR
COSTA MESA, CA 92626-1931

COPY MAILED

FEB 23 2005

OFFICE OF PETITIONS

In re Application of	:	
Dennis Chancellor et al	:	
Application No. 10/019,066	:	ON PETITION
Filed: June 24, 2002	:	
Attorney Docket No. 215/955-US1	:	

This is a decision on the petition under 37 CFR 1.137(b), filed December 23, 2004, to revive the above-identified application.

The petition is **GRANTED.**

The above-identified application became abandoned for failure to reply within the meaning of 37 CFR 1.113 in a timely manner to the final Office action mailed May 5, 2004, which set a shortened statutory period for reply of three (3) months. A reply under 37 CFR 1.113 is limited to an amendment that *prima facie* places the application in condition for allowance or a Notice of Appeal (and appeal fee required by 37 CFR 1.17(b)). The amendment submitted on July 12, 2004, did not *prima facie* place the application in condition for allowance as noted in the Advisory Action mailed August 10, 2004. Therefore, as no Notice of Appeal (and appeal fee), Request for Continued Examination (RCE) or a continuing application was timely filed. No extension of time under the provisions of 37 CFR 1.136(a) was obtained. Accordingly, the above-identified application became abandoned on August 5, 2004.

37 CFR 1.137(b)(3) requires a statement that the entire delay in filing the required reply from the due date for the reply until the filing of a grantable petition pursuant to 37 CFR 1.137(b) was unintentional. If the statement contained in the instant petition varies from the language required by 37 CFR 1.137(b)(3), the statement contained in the instant petition is being construed as the statement required by 37 CFR 1.137(b)(3) and petitioner must notify the Office if this is **not** a correct interpretation of the statement contained in the instant petition.

The file does not indicate a change of address has been submitted, although the address given on the petition differs from the address of record. If appropriate, a change of address should be filed in accordance with MPEP 601.03. A courtesy copy of this decision is being mailed to the address given on the petition; however, the Office will mail all future correspondence solely to the address of record.

Pursuant to petitioner's authorization, Deposit Account No. 50-2191 was charged $250.00 for the notice of appeal fee.

The Office Finance record shows that the petition was inadvertently charged twice. Therefore, a refund of $750.00 is being credited to the above-noted deposit account.

Telephone inquiries concerning this decision should be directed to Wan Laymon at (571) 272-3220.

This matter is being referred to Technology Center 1723

Wan Laymon
Petitions Examiner
Office of Petitions
Office of the Deputy Commissioner
for Patent Examination Policy

cc: ROBERT D. FISH
RUTAN & TUCKER
POST OFFICE BOX 1950
COSTA MESA, CA 92628-1950

UNITED STATES PATENT AND TRADEMARK OFFICE

UNITED STATES DEPARTMENT OF COMMERCE
United States Patent and Trademark Office
Address: COMMISSIONER FOR PATENTS
P.O. Box 1450
Alexandria, Virginia 22313-1450
www.uspto.gov

CARR & FERRELL LLP
2200 GENG ROAD
PALO ALTO, CA 94303

Mail Date: 04/21/2010

Applicant	: Clifford Lee Hannel	: DECISION ON REQUEST FOR
Patent Number	: 7580919	: RECALCULATION of PATENT
Issue Date	: 08/25/2009	: TERM ADJUSTMENT IN VIEW
Appliction No	: 10/019,101	: OF WYETH AND NOTICE OF INTENT TO
Filed	: 12/20/2001	: ISSUE CERTIFICATE OF CORRECTION
		:

The Request for Recalculation is **GRANTED** to the extent indicated.

The patent term adjustment has been determined to be **436** days. The USPTO will *sua sponte* issue a certificate of correction reflecting the amount of PTA days determined by the recalculation.

Prior to the issuance of the certificate of correction, the USPTO will afford patentee an opportunity to be heard and request reconsideration. Accordingly, patentee has **one month or thirty (30) days**, whichever is longer, to file a request for reconsideration of this patent term adjustment calculation. See 35 U.S.C. 154(b)(3)(B)(ii) and 37 CFR 1.322(a)(4). No extensions of time will be granted under 37 CFR 1.136.

Patentee should use document code PET.OP if electronically filing a request for reconsideration of this patent term adjustment calculation. The patentee must also include the information required by 37 CFR 1.705(b)(2) and the fee required by 37 CFR 1.18(e). If patentee does not file a timely request for reconsideration of this patent term adjustment calculation including the information required by 37 CFR 1.705(b)(2) and the fee required by 37 CFR 1.18(e), the USPTO will issue a certificate of correction reflecting the PTA determination noted above.

Patentee should be aware that in order to preserve the right to review in the United States District Court for the District of Columbia of the USPTO patent term adjustment determination, patentee must ensure that he or she also take the steps required under 35 U.S.C. 154(b)(4)(A) in a timely manner. Nothing in the request for recalculation should be construed as providing an alternative time frame for commencing a civil action under 35 U.S.C. 154(b)(4)(A).

Any questions concerning this decision should be directed to the Office of Patent Legal Administration at 571-272-7702.

14 MAR 2003

H7

UNITED STATES PATENT AND TRADEMARK OFFICE

COMMISSIONER FOR PATENTS
UNITED STATES PATENT AND TRADEMARK OFFICE
WASHINGTON, D.C. 20231
www.uspto.gov

Thomas C. Pontani
Cohen, Pontani, Lieberman & Pavane
551 Fifth Avenue, Suite 1210
New York, New York, 10176

In re Application of	:	
Karin KLOKKERS et al.	:	DECISION ON
Application No.: 10/019,121	:	
PCT No.: PCT/EP01/08071	:	PETITION
Int. Filing Date: 12 July 2001	:	
Priority Date: 12 July 2000	:	UNDER 37 CFR 1.47(a)
Attorney's Docket No. 4271-34US	:	
For: Matrixkontrolliertes transdermales ...	:	
ACE-Hemmer	:	

This is in response to the "PETITION UNDER 37 CFR §1.47" filed on 26 September 2002. The $130.00 petition fee has been charged to petitioner's Deposit Account No. 03-2412 as indicated in "General authorization for payment of fees and petitions for extensions of time."

BACKGROUND

On 12 July 2001, applicants filed international application PCT/EP01/08071, which claimed priority of an earliest priority date of 12 July 2000. A DEMAND was filed on 12 February 2002 prior to the expiration of 19 months from the priority date electing the United States. Accordingly, the thirty (30) month time period for paying the basic national fee in the United States of America expired at midnight on 12 January 2003.

On 21 December 2001, applicants filed a Transmittal Letter for entry into the national stage in the United States of America. Filed with the Transmittal Letter was, inter alia, the requisite basic national fee. No executed oath or declaration from the inventors accompanied the Transmittal Letter.

On 01 March 2002, the United States Designated/Elected Office (DO/EO/US) mailed a "NOTIFICATION OF MISSING REQUIREMENTS UNDER 35 U.S.C. 371 IN THE UNITED STATES DESIGNATED/ELECTED OFFICE (DO/EO/US)" (Form PCT/DO/EO/905) which informed applicant, inter alia, that an "Oath or Declaration of the inventors, in compliance with 37 CFR 1.497(a), and (b), identifying the application by International application number and international filing date" must be submitted within two months from its 01 March 2002 date of mailing or by 32 months from the priority date, whichever is later, in order to avoid abandonment of the national stage application.

On 26 September 2002, applicant filed the present petition accompanied, inter alia, an executed Declaration without the signature of SENDL-LANG, Anna.

DISCUSSION

A petition under 37 CFR 1.47(a) must be accompanied by (1) the fee under 37 CFR 1.17(h), (2) factual proof that the missing joint inventor refuses to execute the application or cannot be reached after diligent effort, (3) a statement of the last known address of the missing inventor, and (4) an oath or declaration by each 37 CFR 1.47(a) applicant on his or her own behalf and on behalf of the non-signing joint inventor.

Furthermore, section 409.03(d) of the Manual of Patent Examining Procedure (M.P.E.P.) **Proof of Unavailability or Refusal**, the relevant sections states, in part:

> "...Where a refusal of the inventor to sign the application paper is alleged, the circumstances of the refusal must be specified in an affidavit or declaration by the person to whom the refusal was made. Statements by a party not present when an oral refusal is made will not be accepted.
>
> Before a refusal can be alleged, it must be demonstrated that a *bona fide* attempt was made to present a copy of the application papers (specification, including claims, drawings and oath or declaration) to the nonsigning inventor for signature.
>
> When there is an express oral refusal, that fact along with the time and place of the refusal must be stated in the affidavit or declaration. When there is an express written refusal, a copy of the document evidencing that refusal must be made part of the affidavit or declaration.
>
> When it is concluded by the 37 CFR 1.47 applicant that a nonsigning inventor's conduct constitutes a refusal, all facts upon which that conclusion is based should be stated in an affidavit or declaration. If there is documentary evidence to support facts alleged in the affidavit or declaration, such evidence should be submitted. Whenever a nonsigning inventor gives a reason for refusing to sign the application oath or declaration, that reason should be stated in the affidavit or declaration."

Applicants have satisfied requirements (1), (3), and (4) of 37 CFR 1.47(a). However, requirement (2) has not been satisfied.

The averments of the petition are insufficient to support a finding that the nonsigning inventor, Ms. Anna SENDL-LANG refuses to sign. In this case, it has not been sufficiently demonstrated that a complete copy of the application papers were presented to the nonsigning inventor. Petitioners have provided no proof to corroborate that a complete application was sent (specification, including claims, drawings, and oath or declaration) since only the declaration was mentioned as being sent to her last known addresses. In addition, petitioner has not submitted copies of documentary evidence such as a copy of the registered returned envelope, a certified mail return receipt, a cover letter instructions, and etc., as required by MPEP Section 409.03 to support their allegation about the registered letters sent to Ms. Sendl-Lang. Consequently, it is unclear if she actually received the documents.

Consequently, the petition does not include sufficient factual proof that Ms. Sendl-Lang refused to sign the required documents.

DECISION

The petition under 37 CFR 1.47(a) is **DISMISSED** without prejudice.

If reconsideration of the merits of the petition under 37 CFR 1.47(a) is desired, applicant must file a request for reconsideration within **TWO (2) MONTHS** from the mail date of this Decision. Any reconsideration request should include a cover letter entitled "Renewed Petition Under 37 CFR 1.47(a)."

Any further correspondence with respect to this matter should be addressed to the Commissioner for Patents, Office of PCT Legal Administration, Box PCT, Washington, D.C. 20231, with the contents of the letter marked to the attention of the PCT Legal Office.

Rafael Bacares
Legal Examiner
PCT Legal Office
Telephone: (703) 308-6312
Facsimile: (703) 308-6459

Richard Cole
Legal Examiner
PCT Legal Office

UNITED STATES PATENT and TRADEMARK OFFICE

COMMISSIONER FOR PATENTS
UNITED STATES PATENT AND TRADEMARK OFFICE
P.O BOX 1450
ALEXANDRIA, VA 22313-1450
www.uspto.gov

#9

01 JUL 2003

Thomas C. Pontani
Cohen, Pontani, Lieberman & Pavane
551 Fifth Avenue, Suite 1210
New York, New York, 10176

In re Application of	:	
Karin KLOKKERS et al.	:	DECISION ON
Application No.: 10/019,121	:	
PCT No.: PCT/EP01/08071	:	RENEWED PETITION
Int. Filing Date: 12 July 2001	:	
Priority Date: 12 July 2000	:	UNDER 37 CFR 1.47(a)
Attorney's Docket No. 4271-34US	:	
For: Matrixkontrolliertes transdermales ...	:	
ACE-Hemmer	:	

This decision is in response to applicant's " RENEWED PETITION UNDER 37 CFR 1.47(a)" filed on 16 May 2003 in response to a decision by this Office dated 14 March 2003.

BACKGROUND

The decision by this Office dated 14 March 2003 indicated that the record did not support the premise that petitioner had made a bona fide attempt to present a copy of the application papers (specification, including claims, drawings, and oath or declaration) to the non-signing joint inventor Dr. Sendl-Lang, and that after presentation of the complete copy she had refused to sign the Declaration. In addition, it was unclear what efforts were made to contact Dr. Sendl-Lang because no proof had been provided to corroborate the statements. Petitioner had not submitted copies of documentary evidence such as certified mail return receipt, cover letter instructions, etc. that would have supported a finding that the nonsigning inventor could not be found or reached after diligent effort.

On 16 May 2003, petitioner filed this renewed petition accompanied, inter alia, by a declaration from Dr. Boeters and an executed declaration by Dr. Anna Sendl-Lang.

DISCUSSION

The petition states Dr. Boeters had two subsequent telephone conversations with Dr. Sendl-Lang and that she subsequently executed the Combined Declaration for Patent Application and Power of Attorney. Thus, the declaration is now signed by all the joint-inventors.

Accordingly, the declaration submitted on 16 May 2003 complies with 37 CFR 1.497(a) and (b).

CONCLUSION

The petition under 37 CFR 1.47(a) is **MOOT.**

This application is being returned to the United States Designated/Elected Office (DO/EO/US) for continued processing consistent with this decision. The 35 USC 371 date of this application is **16 May 2003**.

Rafael Bacares
PCT Legal Examiner
PCT Legal Office
Telephone: (703) 308-6312
Facsimile: (703) 308-6459

Richard Cole
PCT Legal Examiner
PCT Legal Office

MAR 1 9 2002

#3

UNITED STATES PATENT AND TRADEMARK OFFICE

COMMISSIONER FOR PATENTS
UNITED STATES PATENT AND TRADEMARK OFFICE
WASHINGTON, D.C. 20231
www.uspto.gov

Carter J. White
Howrey Simon Arnold & White
750 Bering Drive
Houston, Texas 77057-2198

In re Application of	:	
BRAND et al.	:	
Application No.: 10/019,122	:	DECISION ON PETITION
PCT No.: PCT/EP00/05513	:	UNDER 37 CFR 1.137(b)
Int. Filing Date: 13 June 2000	:	
Priority Date: 18 June 1999	:	
Attorney Docket No.: 1836.0677.NPUS00	:	
For: WATER BASED WELLBORE FLUID		

The petition to revive under 37 CFR 1.137(b) filed 19 December 2001 in the above-captioned application is hereby **GRANTED** as follows:

Applicants' statement that "the entire delay in filing the required reply from the due date for the reply until the filing of a grantable petition under 37 CFR 1.137(b) was unintentional" meets the requirements of 37 CFR 1.137(b)(3).

A review of the application file reveals that applicants have submitted the basic national fee of $890 and the requirements of 37 CFR 1.137(b) have been satisfied. Therefore, the request to revive the application abandoned under 35 U.S.C. 371(d) is granted as to the National stage in the United States of America.

This application is being forwarded to the United States Designated/Elected Office (US/DO/EO) for continued processing including the issuance of a Notification of Missing Requirements (Form PCT/DO/EO/905) indicating that an oath or declaration is required.

Anthony Smith

Anthony Smith
Attorney-Advisor
PCT Legal Office
Telephone: (703) 308-6314
Facsimile: (703) 308-6459

UNITED STATES PATENT AND TRADEMARK OFFICE

Commissioner for Patents
United States Patent and Trademark Office
P.O. Box 1450
Alexandria, VA 22313-1450
www.uspto.gov

VOLPE AND KOENIG, P.C.
UNITED PLAZA, SUITE 1600
30 SOUTH 17TH STREET
PHILADELPHIA PA 19103

COPY MAILED

FEB 01 2005

OFFICE OF PETITIONS

In re Application of	:	
Franz Wieth et al	:	
Application No. 10/019,142	:	DECISION GRANTING PETITION
Filed: April 15, 2002	:	UNDER 37 CFR 1.137(b)
Attorney Docket No. LBP-PT016	:	

This is a decision on the petition under 37 CFR 1.137(b), filed September 16, 2004, to revive the above-identified application.

The petition is **GRANTED**.

The petition satisfies the conditions for revival pursuant to the provisions of 37 CFR 1.137(b) in that (1) the reply in the form of an RCE; (2) the petition fee; and (3) the required statement of unintentional delay have been received. Accordingly, the reply to the final Office action of February 10, 2004 is accepted as having been unintentionally delayed.

Telephone inquiries concerning this decision should be directed to the undersigned at (571) 272-3208.

The application file is being referred to Technology Center AU 2636.

Karen Creasy

Karen Creasy
Petitions Examiner
Office of Petitions
Office of the Deputy Commissioner
for Patent Examination Policy

09 AUG 2002

UNITED STATES PATENT AND TRADEMARK OFFICE

COMMISSIONER FOR PATENTS
UNITED STATES PATENT AND TRADEMARK OFFICE
WASHINGTON, D.C. 20231
www.uspto.gov

Edward W. Callan
3830 Valley Centre Drive, No. 705
PMB 452
San Diego, CA 92130

In re Application of
SORENSEN, Jens Erik *et al*
U.S. Application No.: 10/019,155
PCT No.: PCT/US01/26463
Int. Filing Date: 24 August 2001
Priority Date: 24 August 2000
Attorney Docket No.: 52-170
For: ORGANIZING IDEAS ACCUMULATED IN A COMPUTER DATABASE

DECISION

This decision is in response to applicants' "Re-Transmittal of Transmittal Letter (Form PTO-1390) Previously Filed by Express Mail on October 25, 2001" filed on 06 December 2001 which is treated as a petition under 37 CFR 1.181. No fee is required.

BACKGROUND

On 25 October 2001, applicants purportedly filed a transmittal letter for express entry into the national stage in the United States under 35 U.S.C. 371 using Express Mail No. ET655734722US which was accompanied by, *inter alia*, a declaration, a check for $448.00.

On 06 December 2001, applicants filed the instant petition which was accompanied by, *inter alia*, a copy of Express Mail label No. ET655734722US, a copy of a USPS Track/Confirm shipment history for Express Mail No. ET655734722US, a signed declaration, and a copy of the transmittal letter originally filed 25 October 2001.

DISCUSSION

A review of USPTO records reveal that the documents originally filed on 25 October 2001 were received and processing under 35 U.S.C. 371 was commenced. That application was given U.S. application No. 10/031,559. A review of financial records show that a check of $448.00 was received for the basic national fee and extra and independent claims..

A further review shows that the instant papers filed 06 December 2001 was processed as another national stage application under 35 U.S.C. 371 and given U.S. application No. 10/019,155. The required fees of $448.00 for this application were charged from Deposit Account No. 03-0375 as authorized in the transmittal letter. This application was given a date of receipt of 06 December 2001

It appears that these two U.S. applications are identical and would have to be merged. However, U.S. application No. 10/031,559 is lost and cannot be located.

Accordingly, applicants should use **U.S. application No. 10/019,155** for all future correspondence of the national stage of PCT/US01/26463. If U.S. Application No. 10/031,559 is found, it should be merged with the present application.

DECISION

For the reason above, applicants' petition under 37 CFR 1.181 has been **GRANTED**.

Deposit Account No. 03-0375 has been credited the amount of $448.00 in fees paid in U.S. application No. 10/031,559. Moreover, the date of receipt of U.S. application No. 10/019,155 will be changed to **25 October 2001**.

Any further correspondence with respect to this matter should be addressed to the Assistant Commissioner for Patent, Box PCT, Washington, D.C. 20231, with the contents of the letter marked to the attention of the PCT Legal Affairs Division of the PCT Legal Office.

Leonard Smith
PCT Legal Examiner
PCT Legal Office

James Thomson
Attorney Advisor
PCT Legal Office

Tel.: (703) 308-6457

UNITED STATES PATENT AND TRADEMARK OFFICE

Commissioner for Patents
United States Patent and Trademark Office
P.O. Box 1450
Alexandria, VA 22313-1450
www.uspto.gov

MAILED

MAR 23 2010

OFFICE OF PETITIONS

WYETH LLC
PATENT LAW GROUP
5 GIRALDA FARMS
MADISON NJ 07940

In re Patent of Lakhotia et al.	:	
Patent No. 7,553,634	:	DECISION ON REQUEST
Issue Date: June 30, 2009	:	FOR RECONSIDERATION OF
Application No. 10/019,163	:	PATENT TERM ADJUSTMENT
Filing Date: December 20, 2001	:	
Attorney Docket No. AM100039	:	

This is a decision on the petition filed on August 28, 2009, which is being treated as a petition under 37 C.F.R. § 1.705(d) requesting that the patent term adjustment indicated on the patent be corrected to indicate that the term of the patent is extended or adjusted by one thousand two hundred thirty-one (1,231) days.

The petition to correct the patent term adjustment indicated on the above-identified patent to indicate that the term of the above-identified patent is extended or adjusted by one thousand two hundred thirty-one (1,231) days is **GRANTED to the extent indicated herein**.

The Office will *sua sponte* issue a certificate of correction. Pursuant to 37 C.F.R. § 1.322, the Office will not issue a certificate of correction without first providing assignee or patentee an opportunity to be heard. Accordingly, patentees are given **one (1) month or thirty (30) days**, whichever is longer, from the mail date of this decision to respond. No extensions of time will be granted under 37 C.F.R. § 1.136.

Patentees assert the patent term adjustment should have been increased by 488 days for delay under 35 U.S.C. § 154(b)(1)(B) ("B Delay").

Issue #1

The first issue in this case is the number of days of B Delay.

The instant application is a national stage application of International Application No. PCT/US00/17019.

MPEP 2730 states,

> 37 CFR 1.702(b) indicates that a patent is entitled to patent term adjustment if, subject to a number of limitations, the Office fails to issue a patent within three years of the actual

filing date of the application (35 U.S.C. 154(b)(1)(B)). In the case of an international application, the phrase "actual filing date of the application in the United States" means the date the national stage commenced under 35 U.S.C. 371(b) or (f). *See Changes to Implement Patent Term Adjustment Under Twenty-Year Patent Term*, 65 FR 56366, 56382-84, (Sept. 18, 2000), 1239 Off. Gaz. Pat. Office 14, 28-30 (Oct. 3, 2000).

The national stage commenced on December 26, 2001, in this application. Therefore, the period of B Delay begins on December 27, 2004, which is the day after the date that is three years after the national stage commenced.

Per 35 U.S.C. § 154(b)(1)(B)(i), B Delay does not include "any time consumed by continued examination of the application requested by the applicant under section 132(b)."[1] In other words, B Delay in this case does not include the time period from the date a request for continued examination was filed until the date the patent issued.

The number of days beginning December 27, 2004, the day after the date three years after the national stage commenced, until July 5, 2006, *the day before* the date the first RCE was filed is 556 days.

Patentees assert the amount of B Delay is 563 days. However, as shown above, the amount of B Delay is 556 days.

Issue #2

The second issue in this case is the extent to which the 556 days of B Delay should have led to an increase in patent term adjustment.

With respect to the period of adjustment for the Office taking in excess of three years to issue the patent, 35 U.S.C. § 154(b)(2)(A) limits Office delay to the sum of delay under 35 U.S.C. § 154(b)(1)(A) ("A Delay") and B Delay to the extent such periods of delay are not overlapping.

As recognized by patentees, 9 days of A Delay overlap with the days of B Delay. In view of the 9 days of overlap, the patent term adjustment should have been increased by 547 days for B Delay.

Patentees indicate the amount of B Delay should also be reduced by 66 days. Patentees appear to assert the reduction is appropriate because 66 days of Applicant Delay overlap with 66 days of B Delay. However, the 66 days of Applicant Delay are irrelevant when determining the total amount of Office delay. The total amount of Office delay is the sum of A Delay and B Delay reduced by the number of days of overlap between A Delay and B Delay.

---

[1] *See Changes to Implement Patent Term Adjustment Under Twenty-Year Patent Term; Final Rule*, 65 Fed. Reg. 56,366, 53,370-53,371 (September 18, 2000) ("Once a request for continued examination under 35 U.S.C. 132(b) and § 1.114 is filed in an application, any further processing or examination of the application, including granting of a patent, is by virtue of the continued examination given to the application under 35 U.S.C. 132(b) and § 1.114.")

Conclusion

When the Office issued the patent, the Office did not increase the patent term adjustment for any days of B Delay. The patent term adjustment should have been increased by 547 days for B Delay.

The patent term adjustment is 1,290 days which is the sum of 844 days of A Delay and 556 days of B Delay reduced by 9 days of overlap and 101 (66 + 35) days of Applicant Delay.

The application is being forwarded to the Certificates of Branch for issuance of a certificate of correction. The Office will issue a certificate of correction indicating that the term of the above-identified patent is extended or adjusted by **one thousand two hundred ninety (1,290)** days.

Telephone inquiries specific to this decision should be directed to Senior Petitions Attorney Steven Brantley at (571) 272-3203.

Anthony Knight
Supervisor
Office of Petitions

Enclosure: Copy of DRAFT Certificate of Correction

UNITED STATES PATENT AND TRADEMARK OFFICE

CERTIFICATE OF CORRECTION

PATENT NO.	:	7,553,634 B2
ISSUE DATE	:	June 30, 2009
INVENTOR(S)	:	Lakhotia et al.

DRAFT

It is certified that error appears in the above-identified patent and that said Letters Patent is hereby corrected as shown below:

On the cover page,

[*] Notice: Subject to any disclaimer, the term of this patent is extended or adjusted under 35 USC 154(b) by 743 days.

Delete the phrase "by 743 days" and insert - by 1,290 days--

UNITED STATES PATENT AND TRADEMARK OFFICE

Commissioner for Patents
United States Patent and Trademark Office
P.O. Box 1450
Alexandria, VA 22313-1450
www.uspto.gov

WYETH
PATENT LAW GROUP
5 GIRALDA FARMS
MADISON, NJ 07940

COPY MAILED
OCT 0 2 2006
OFFICE OF PETITIONS

In re Application of	:	
Benjamin J. Metcalf	:	
Application No. 10/019,164	:	DECISION ON PETITION
Filed: December 20, 2001	:	
Attorney Docket No. 33,484-00	:	

This is a decision on the petition under the unintentional provisions of 37 CFR 1.137(b), filed December 19, 2005 to revive the above-identified application.

The petition is **GRANTED**.

This application became abandoned as a result of petitioner's failure to file an appeal brief (and fee required by 37 CFR 41.20(b)(2)) within the time period provided in 37 CFR 41.37(a)(1). As an appeal brief (and appeal brief fee) was not filed within two (2) months of the Notice of Appeal filed April 12, 2005, the appeal was dismissed and the proceedings as to the rejected claims were terminated. *See* 37 CFR 1.197(b). As no claim was allowed, the application became abandoned on September 13, 2005 (a three month extension of time pursuant to the provisions of 37 CFR 1.136(a) was obtained). *See* MPEP 1215.04.

The petition satisfies the requirements of 37 CFR 1.137(b) in that petitioner has supplied (1) the reply in the form of a Request for Continued Examination (RCE), fee of $750, and the submission required by 37 CFR 1.114; (2) the petition fee of $1,500; and (3) a proper statement of unintentional delay.

Telephone inquiries concerning this decision should be directed to the undersigned at (571) 272-3218.

This application is being referred to Technology Center AU 1645 for processing of the RCE and for appropriate action by the Examiner in the normal course of business on the submission under 37 CFR 1.114.

Frances Hicks
Petitions Examiner
Office of Petitions

25 NOV 2002

UNITED STATES PATENT AND TRADEMARK OFFICE

COMMISSIONER FOR PATENTS
UNITED STATES PATENT AND TRADEMARK OFFICE
WASHINGTON, D.C. 20231
www.uspto.gov

THE PROCTOR & GAMBLE COMPANY
Ivorydale Technical Center-Box 474
5299 Spring Grove Avenue
Cincinnati, Ohio 45217

In re Application of
SONG, Brian Xiaoqing *et al*
U.S. Application No.: 10/019,175
PCT No.: PCT/US00/18070
Int. Filing Date: 30 June 2000
Priority Date: 01 July 1999
Attorney Docket No.: 7652
For: TRANSPARENT OR TRANSLUCENT, LIQUID OR GEL TYPE AUTOMATIC DISHWASHING DETERGENT PRODUCT

DECISION ON PETITION UNDER 37 CFR 1.182

This decision is in response to applicants' "Petition Under 37 C.F.R. § 1.182 to Accept Affidavit for Change of Inventor's Name" filed 21 October 2002.

BACKGROUND

On 12 August 2002, a communication was mailed notifying applicants that the declaration submitted on 21 December 2001 was not in compliance with 37 CFR 1.497 because the first named inventor signed his name as Xiaoqing Song despite changing his name to Brian Xiaoqing Song. Applicants were given two months to provide a name change pursuant to 37 CFR 1.182.

On 21 October 2002, applicants provided the instant petition which was accompanied by, *inter alia*, a signed affidavit and a new declaration.

12/04/2002 SNAJARRO 00000002 162480 10019175
01 FC:1460 130.00 CH

DISCUSSION

Section 605.04(c), *Inventor Changes Name*, of the Manual of Patent Examining Procedures (MPEP) states, in part:

> The petition must include an appropriate petition fee and an affidavit signed with both names and setting forth the procedure whereby the change of name was effected, or a certified copy of the court order.

In the instant petition, applicants have provided an affidavit signed by the inventor listing the prior name and the new name, *i.e.*, Xiaoqing Song and Brian Xiaoqing. Applicants also included authorization to charge the $130.00 petition fee to Deposit Account No. 16-2480.

This meets the requirements of the MPEP to change an inventor's name.

CONCLUSION

Accordingly, the petition under 37 CFR 1.182 is hereby **GRANTED**.

The declaration provided with the instant petition listing the inventor's new name complies with 37 CFR 1.497(a) & (b).

Applicants have completed the requirements for acceptance under 35 U.S.C. 371(c). The application has an international filing date of 30 June 2000, under 35 U.S.C. 363, and a 35 U.S.C. 371 date of **21 October 2002**.

This application is being forwarded to the National Stage Processing Division of the Office of PCT Operations for continued processing

Leonard Smith
PCT Legal Examiner
PCT Legal Office

James Thomson
Attorney Advisor
PCT Legal Office

Tel.: (703) 308-6457

12 JUL 2002

UNITED STATES PATENT AND TRADEMARK OFFICE

#6

Commissioner for Patents
United States Patent and Trademark Office
Washington, D.C. 20231
www.uspto.gov

Birch, Stewart, Kolasch & Birch, LLP
P.O. Box 747
Falls Church, VA 22040-0747

In re Application of RYHMAN	:	
U.S. Application No.: 10/019,228	:	DECISION
Int. Application No.: PCT/SE00/01163	:	
Int. Filing Date: 06 June 2000	:	
Priority Date: 29 June 1999	:	
Attorney Docket No.: 0104-0374P	:	
For: HOSE	:	

This is in response to applicant's letter filed 15 March 2002, which is being treated as a request to treat the accompanying declaration as having been originally filed on 23 January 2002.

BACKGROUND

On 06 June 2000, applicant filed international application PCT/SE00/01163, which claimed priority of an earlier Sweden application filed 29 June 1999. A copy of the international application was communicated to the USPTO from the International Bureau on 04 January 2001. A Demand for international preliminary examination, in which the United States was elected, was filed on 16 January 2001, prior to the expiration of nineteen months from the priority date. Accordingly, the thirty-month period for paying the basic national fee in the United States expired at midnight on 31 December 2001 (29 December 2001 was a Saturday).

On 28 December 2001, applicant filed national stage papers in the United States Designated/Elected Office (DO/EO/US). The submission was accompanied by, *inter alia*, the basic national fee required by 35 U.S.C. 371(c)(1).

On 05 March 2002, the DO/EO/US mailed a Notification of Missing Requirements Under 35 U.S.C. 371 (Form PCT/DO/EO/905), which indicated that an oath or declaration in compliance with 37 CFR 1.497 must be filed.

On 15 March 2002, applicant filed the present request along with a copy of a return postcard receipt.

DISCUSSION

The evidence of record is sufficient to establish that the declaration was originally filed on 23 January 2002. Specifically, the copy of the return postcard, which includes an "Executed Declaration" in its itemized contents and which bears a USPTO date stamp of 23 January 2002, serves as *prima facie* evidence that the declaration was received by the USPTO on 23 January 2002.

CONCLUSION

For the reasons above, the present request is GRANTED.

The Notification of Missing Requirements Under 35 U.S.C. 371 (Form PCT/DO/EO/905) mailed 05 March 2002 is hereby VACATED.

The present application has an International Filing Date of 06 June 2000 and a date under 35 U.S.C. 371 of 23 January 2002.

The application will be forwarded to the DO/EO/US for processing in accordance with this decision.

Bryan Tung
PCT Legal Examiner
PCT Legal Office

Telephone: 703-308-6614
Facsimile: 703-308-6459

MAR 2 2 2002

UNITED STATES PATENT AND TRADEMARK OFFICE

Commissioner for Patents
United States Patent and Trademark Office
Washington, D.C. 20231
www.uspto.gov

James C. Wray
1493 Chain Bridge Road, Suite 300
McLean, VA 22101

In re Application of Petra KOSCHANY Application No.: 09/019,231 PCT No.: PCT/EP01/03488 Int. Filing Date: 27 March 2001 Priority Date: 28 March 2000 Attorney's Docket No.: MSI For: Method of Operating a Fuel Cell System, and Fuel Cell System Operable Accordingly	DECISION ON PETITION UNDER 37 CFR 1.137(b)

This is in response to "Petition For Revival Of An International Application For Patent Designating The U.S. Abandoned Unintentionally Under 37 C.F.R. §1.137(b)" filed on 28 December 2001.

BACKGROUND

On 27 March 2001, this international application was filed, which claimed an earliest priority date of 28 March 2000.

No Demand electing the United States was filed in this international application Accordingly, the deadline for paying the basic national fee in the United States under 35 U.S.C. 371 and 37 CFR 1.494 was 28 November 2001. This international application became abandoned with respect to the United States at midnight on 28 November 2001 for failure pay the basic national fee.

On 28 December 2001, applicant filed in the United States Patent and Trademark Office (PTO) the instant petition, and a transmittal letter for entry into the national stage in the U.S. under 35 U.S.C. 371, which was accompanied by, *inter alia*, the U.S. basic national fee, and an executed declaration.

DISCUSSION

A grantable petition to revive an abandoned application under 37 CFR 1.137(b) must be accompanied by (1) the required reply, unless previously filed; (2) the petition fee as set forth in § 1.17(m); and (3) a statement that the entire delay in filing the required reply from the due date for the reply until the filing of a grantable petition pursuant to this paragraph was unintentional; and (4) any terminal disclaimer (and fee as set forth in § 1.20 (d)) required pursuant to paragraph (c) of this section.

Petitioner has provided: (1) the proper reply by submitting the basic national filing fee, (2) the petition fee set forth in §1.17(m) and (3) the proper statement under 137(b)(3). In this application, no terminal disclaimer is required.

Accordingly, the petition is deemed to satisfy requirements (1), (2), (3), and (4) under 37 CFR 1.137(b).

DECISION

The petition under 37 CFR 1.137(b) is **GRANTED**.

This application is being returned to the United States Designated/Elected Office (DO/EO/US) for continued processing. The 35 USC 371 date of this application is **28 December 2001**.

Rafael Bacares
PCT Legal Examiner
PCT Legal Office
Tel: (703) 308-6312
Fax: (703) 308-6459

16 SEP 2002

UNITED STATES PATENT AND TRADEMARK OFFICE

COMMISSIONER FOR PATENTS
UNITED STATES PATENT AND TRADEMARK OFFICE
WASHINGTON, D.C. 20231
www.uspto.gov

MORGAN & FINNEGAN, LLP
345 Park Avenue
New York, NY 10154

In re Application of
DENTON, Richard Rex *et al*
U.S. Application No.: 10/019,242
Int. Application No.: PCT/US00/17540
Int. Filing Date: 26 June 2000
Priority Date: 25 June 1999
Attorney Docket No.: 2458-4042US2
For: METHODS FOR OBTAINING AND USING HAPLOTYPE DATA

DECISION

This decision is in response to applicants' "Petition to Consider . . . (37 C.F.R. § 1.10(e))" filed 30 April 2002 and applicants' "Petition under 37 CFR 1.182 . . ." to correct to a 35 U.S.C. 111(a) application filed via facsimile on 13 September 2002.

BACKGROUND

On 21 December 2001, applicants filed four separate transmittal letters for entry into the national stage for the same international application, *i.e.*, PCT/US00/17540. Another transmittal letter for entry into the national stage for PCT/US00/17540 was filed 26 December 2001. This resulted in five different 35 U.S.C. 371 applications for the same international application.

On 30 April 2002, applicants filed the instant petition under 37 CFR 1.10(e) because applicants believed that the papers filed using attorney docket number 2458-4042US2 were lost. This petition was placed in a new national stage application and designated as U.S. application number, 10/148,372.

On 14 June 2002, a Notification was mailed indicating that the filing of five separate national stage applications for the same international application was improper. Applicants were requested to file a petition pursuant to 37 CFR 1.182 to convert four of the applications to a filing under 35 U.S.C. 111(a), or provide respective statements for any of the four additional sets of papers which applicants do not intend to convert to 35 U.S.C. 111(a) within two months of the mail date of the Notification. Extensions of time are available pursuant to 37 CFR 1.136(a).

On 13 September 2002, after a telephone call from James Thomson of the PCT Legal branch, a petition under 37 CFR 1.182 was filed requesting that this application be corrected to a filing pursuant to 35 U.S.C. 111(a).

DISCUSSION

Petition Under 37 CFR 1.10(e)

In the instant petition, applicants request that the application filed under attorney docket number 2458-4042US2 be given a filing date of 21 December 2001. Applicants included evidence that the application was originally submitted on 21 December 2001 using USPS Express Mail.

A review of USPTO records reveal that the application for attorney docket number 2458-4042US2 was located and it was designated as U.S. application number 10/019,242 which was received on **21 December 2001**. This application was temporarily suspended due to the fact that the international application PCT/US00/17540 had five separate national stage filings.

Accordingly, applicants petition under 37 CFR 1.10(e) is not required.

Petition Under 37 CFR 1.182

Applicants request that the above-identified application be treated as a patent application filed under 35 U.S.C. 111(a) has been accorded.

The petition fee of $130.00 (Fee Code 122) has been charged to Deposit Account No. 13-4500 as authorized.

CONCLUSION

Applicants' petition under 37 CFR 1.10(e) is **DISMISSED** as **MOOT**.

Applicants' petition under 37 CFR 1.182 to correct to a filing under 35 U.S.C. 111(a) has been **GRANTED**.

U.S. application No. 10/148,372 will be merged into the file of U.S. application No. 10/019,242. U.S. Application No. 10/148,372 will no longer be an active U.S. application number. **All future correspondence regarding this patent application should be directed to U.S. application No. 10/019,242.**

All required fees including the basic filing fee of $740.00 (Fee Code 101), an additional claim fee of $252.00 (Fee Code 103), and a multiple dependent claim fee of $280.00 (Fee Code 104) will be charged from Deposit Account No. 13-4500 as authorized.

Any period of adjustment to the term of a patent under 35 U.S.C. 154(b)(May 29, 2000) may be reduced by the period of time beginning on the filing date accorded under 35 U.S.C. 11 and ending on the mailing date of this decision. *See* 37 CFR 1.704(a).

This application is being forwarded to the Office of Initial Patent Examination for further processing under 35 U.S.C. 111(a) with a filing date of **21 December 2001**.

Leonard Smith
PCT Legal Examiner
PCT Legal Office

James Thomson
Attorney Advisor
PCT Legal Office

Tel.: (703) 308-6457

14 JUN 2002

UNITED STATES PATENT AND TRADEMARK OFFICE

Commissioner for Patents
United States Patent and Trademark Office
Washington, D.C. 20231
www.uspto.go

Morgan & Finnegan LLP
345 Park Avenue
New York, NY 10154-0053

In re Application of DENTON ET AL. U.S. Application: 10/019,415 PCT Application No.: PCT/US00/17540 International Filing Date: 26 June 2000 Priority Date: 25 June 1999 Attorney's Docket No.: 2458-4042US4 For: METHODS FOR OBTAINING AND USING HAPLOTYPE DATA	NOTIFICATION

This decision is in response to applicants' filing of five separate sets of national stage application papers for international application PCT/US00/17540.

BACKGROUND

On 26 June 2000, applicants filed international application PCT/US00/17540, which claimed a priority date of 25 June 1999 from provisional application 60/141,521 filed in the United States of America. A Demand for international preliminary examination, in which the United States was elected, was timely filed on 25 January 2001. Accordingly, the thirty-month period for meeting the requirements for entry into the national stage expired at midnight on 26 December 2001.

On 21 December 2001, applicants filed a transmittal letter for entry into the national stage in the United States which was accompanied by, *inter alia*, the requisite basic filing fee, a copy of the international application communicated by the International Bureau, and a preliminary amendment canceling claims 1-53, 56-104, 107-155, 157-183. Applicants did not submit an oath or declaration of the inventors (35 U.S.C. 371(c)(4)). This transmittal letter resulted in the above U.S. application number.

On 21 December 2001, applicants filed three additional transmittal letters for entry into the national stage in the United States based upon PCT/US00/17540, each of which was accompanied by, *inter alia*, the requisite basic filing fee, a copy of the international application communicated by the International Bureau, and a preliminary amendment. Applicants did not submit an oath or declaration of the inventors (35 U.S.C. 371(c)(4)) in any of the additional letters. These transmittal letters resulted in the following U.S. application numbers:

(1) 10/019,242, bearing attorney docket number 2458-4042US2, in which the preliminary amendment cancels claims 9-68, 73-119, and 125-183;

(2) 10/019,243, bearing attorney docket number 2458-4042US3, in which the preliminary amendment cancels claims 1-12, 22-73, 79-124, and 130-183; and

(3) 10/019,342, bearing attorney docket number 2458-4042US5, in which the preliminary amendment cancels claims 1-58, 69-109, 120-160, and 171-183.

On 26 December 2001, applicants filed an additional transmittal letter for entry into the national stage in the United States based upon PCT/US00/17540 which was accompanied by, *inter alia*, the requisite basic filing fee, a copy of the international application communicated by the International Bureau, and a preliminary amendment. Applicants did not submit an oath or declaration of the inventors (35 U.S.C. 371(c)(4)). This transmittal letter resulted in the following U.S. application number:

(1) 10/019,593, bearing attorney docket number 2458-4042US6, in which the preliminary amendment cancels claims 1-183 and adds new claims 184 and 185.

On 19 March 2002, the United States Designated/Elected Office (PTO) mailed applicants a NOTIFICATION OF MISSING REQUIREMENTS UNDER 35 U.S.C. 371 IN THE UNITED STATES DESIGNATED/ELECTED OFFICE (DO/EO/US) (Form PCT/DO/EO/905) for U.S. application number 10/019,415 indicating that an oath or declaration in compliance with 37 C.F.R. 1.497(a) and (b) was required as well as the surcharge for providing the oath or declaration later than the appropriate 20 or 30 months from the priority date (37 CFR 1.492(e)). Applicants were given a TWO (2) MONTH period from the mail date of the Notification to properly respond, with extensions of time obtainable under 37 C.F.R. 1.136(a).

DISCUSSION

As indicated in the above recited facts, applicants filed five sets of papers to enter the national stage for PCT/US00/17540. The end result for an international application designating the United States of America is a **single** U.S. national stage application. Application Number 10/019,415 is the National stage application for International application PCT/US00/17540. Therefore, the submission of five sets of national stage papers to enter the United States of America is improper.

Applicants may provide petitions under 37 CFR 1.182 to convert each or any of the additional sets of papers filed 21 December 2001 and 26 December 2001 to respective 37 CFR 1.111(a) applications. Else, the four additional sets of papers or any additional set in which a petition under 37 CFR 1.182 is not provided filed on 21 December 2001 and 26 December 2001 will be placed in the file of application number 10/019,415, except for duplicate copies thereof, and examination shall proceed using the submission accorded application number 10/019,415 which bears attorney docket number 2458-4042US4 and the preliminary amendment canceling claims 1-53, 56-104, 107-155, and 157-183. The preliminary amendments directed to any of the four additional sets of papers filed 21 December 2001 and 26 December 2001 in which a petition under 37 CFR 1.182 is not provided will not be entered.

CONCLUSION

For the reasons above, submission of five separate sets of papers to enter the National Stage is improper.

A proper response to this notification must be filed within TWO (2) MONTHS from the mail date of this decision. A proper response includes filing a petition under 37 CFR 1.182, with the appropriate petition fee, for each or any of the additional sets of papers filed 21 December 2001 and 26 December 2001 which applicants intends to convert to 37 CFR 1.111(a) applications or respective

statements for any of the four additional sets of papers filed 21 December 2001 and 26 December 2001 which applicants do not intend to convert to 37 CFR 1.111(a) applications. Extensions of time may be obtained under 37 CFR 1.136(a).

Any further correspondence with respect to this matter should be addressed to the Assistant Commissioner of Patents, Box PCT, Washington, D.C., 20231, with the contents of the letter marked to the attention of the PCT Legal Office.

Gregory Vidovich
PCT Legal Detailee
PCT Legal Office
Telephone: 703-308-1315
Facsimile: 703-308-6459

Leonard Smith
PCT Legal Examiner
PCT Legal Office

16 SEP 2002

UNITED STATES PATENT AND TRADEMARK OFFICE

COMMISSIONER FOR PATENTS
UNITED STATES PATENT AND TRADEMARK OFFICE
WASHINGTON, D.C. 20231
www.uspto.gov

MORGAN & FINNEGAN, LLP
345 Park Avenue
New York, NY 10154

In re Application of
DENTON, Richard Rex *et al*
U.S. Application No.: 10/019,243
Filing Date: 21 December 2001
Attorney Docket No.: 2458-4042US3
For: METHODS FOR OBTAINING AND USING HAPLOTYPE DATA

DECISION ON PETITION UNDER 37 CFR 1.182

This decision is in response to applicants' petition filed via facsimile on 27 June 2002 requesting to convert the above-captioned national stage application to an application pursuant to 35 U.S.C. 111(a) which is treated as a petition under 37 CFR 1.182 and is hereby **GRANTED** as follows.

Applicants originally submitted this application as a national stage filing pursuant to 35 U.S.C. 371 of international application PCT/US00/17540 on 21 December 2001 which included a copy of the international application and a preliminary amendment. However, applicants filed five separate national stage applications of the aforementioned international application.

As stated in the decision mailed 14 June 2002, this is not permitted. A proper response would be to file a petition pursuant to 37 CFR 1.182. Accordingly, applicants request that the above-identified application be treated as a patent application filed under 35 U.S.C. 111(a) has been accorded.

All required fees including the petition fee of $130.00 (Fee Code 122), the basic filing fee of $740.00 (Fee Code 101), an additional claim fee of $252.00 (Fee Code 103), and a multiple dependent claim fee of $280.00 (Fee Code 104) will be charged from Deposit Account No. 13-4500 as authorized.

Any period of adjustment to the term of a patent under 35 U.S.C. 154(b)(May 29, 2000) may be reduced by the period of time beginning on the filing date accorded under 35 U.S.C. 11 and ending on the mailing date of this decision. *See* 37 CFR 1.704(a).

This application is being forwarded to the Office of Initial Patent Examination for further processing under 35 U.S.C. 111(a) with a filing date of **21 December 2001**.

Leonard E Smith

Leonard Smith
PCT Legal Examiner
PCT Legal Office

James Thomson

James Thomson
Attorney Advisor
PCT Legal Office

Tel.: (703) 308-6457

09/25/2002 SNAJARRO 00000005 134500 10019243
04 FC:122 130.00 CH

14 JUN 2002

UNITED STATES PATENT AND TRADEMARK OFFICE

Commissioner for Patents
United States Patent and Trademark Office
Washington, D.C. 20231
www.uspto.go

Morgan & Finnegan LLP
345 Park Avenue
New York, NY 10154-0053

In re Application of	:	
DENTON ET AL.	:	
U.S. Application: 10/019,415	:	NOTIFICATION
PCT Application No.: PCT/US00/17540	:	
International Filing Date: 26 June 2000	:	
Priority Date: 25 June 1999	:	
Attorney's Docket No.: 2458-4042US4	:	
For: METHODS FOR OBTAINING AND USING HAPLOTYPE DATA	:	

This decision is in response to applicants' filing of five separate sets of national stage application papers for international application PCT/US00/17540.

BACKGROUND

On 26 June 2000, applicants filed international application PCT/US00/17540, which claimed a priority date of 25 June 1999 from provisional application 60/141,521 filed in the United States of America. A Demand for international preliminary examination, in which the United States was elected, was timely filed on 25 January 2001. Accordingly, the thirty-month period for meeting the requirements for entry into the national stage expired at midnight on 26 December 2001.

On 21 December 2001, applicants filed a transmittal letter for entry into the national stage in the United States which was accompanied by, *inter alia*, the requisite basic filing fee, a copy of the international application communicated by the International Bureau, and a preliminary amendment canceling claims 1-53, 56-104, 107-155, 157-183. Applicants did not submit an oath or declaration of the inventors (35 U.S.C. 371(c)(4)). This transmittal letter resulted in the above U.S. application number.

On 21 December 2001, applicants filed three additional transmittal letters for entry into the national stage in the United States based upon PCT/US00/17540, each of which was accompanied by, *inter alia*, the requisite basic filing fee, a copy of the international application communicated by the International Bureau, and a preliminary amendment. Applicants did not submit an oath or declaration of the inventors (35 U.S.C. 371(c)(4)) in any of the additional letters. These transmittal letters resulted in the following U.S. application numbers:

(1) 10/019,242, bearing attorney docket number 2458-4042US2, in which the preliminary amendment cancels claims 9-68, 73-119, and 125-183;

(2) 10/019,243, bearing attorney docket number 2458-4042US3, in which the preliminary amendment cancels claims 1-12, 22-73, 79-124, and 130-183; and

(3) 10/019,342, bearing attorney docket number 2458-4042US5, in which the preliminary amendment cancels claims 1-58, 69-109, 120-160, and 171-183.

On 26 December 2001, applicants filed an additional transmittal letter for entry into the national stage in the United States based upon PCT/US00/17540 which was accompanied by, *inter alia*, the requisite basic filing fee, a copy of the international application communicated by the International Bureau, and a preliminary amendment. Applicants did not submit an oath or declaration of the inventors (35 U.S.C. 371(c)(4)). This transmittal letter resulted in the following U.S. application number:

(1) 10/019,593, bearing attorney docket number 2458-4042US6, in which the preliminary amendment cancels claims 1-183 and adds new claims 184 and 185.

On 19 March 2002, the United States Designated/Elected Office (PTO) mailed applicants a NOTIFICATION OF MISSING REQUIREMENTS UNDER 35 U.S.C. 371 IN THE UNITED STATES DESIGNATED/ELECTED OFFICE (DO/EO/US) (Form PCT/DO/EO/905) for U.S. application number 10/019,415 indicating that an oath or declaration in compliance with 37 C.F.R. 1.497(a) and (b) was required as well as the surcharge for providing the oath or declaration later than the appropriate 20 or 30 months from the priority date (37 CFR 1.492(e)). Applicants were given a TWO (2) MONTH period from the mail date of the Notification to properly respond, with extensions of time obtainable under 37 C.F.R. 1.136(a).

DISCUSSION

As indicated in the above recited facts, applicants filed five sets of papers to enter the national stage for PCT/US00/17540. The end result for an international application designating the United States of America is a **single** U.S. national stage application. Application Number 10/019,415 is the National stage application for International application PCT/US00/17540. Therefore, the submission of five sets of national stage papers to enter the United States of America is improper.

Applicants may provide petitions under 37 CFR 1.182 to convert each or any of the additional sets of papers filed 21 December 2001 and 26 December 2001 to respective 37 CFR 1.111(a) applications. Else, the four additional sets of papers or any additional set in which a petition under 37 CFR 1.182 is not provided filed on 21 December 2001 and 26 December 2001 will be placed in the file of application number 10/019,415, except for duplicate copies thereof, and examination shall proceed using the submission accorded application number 10/019,415 which bears attorney docket number 2458-4042US4 and the preliminary amendment canceling claims 1-53, 56-104, 107-155, and 157-183. The preliminary amendments directed to any of the four additional sets of papers filed 21 December 2001 and 26 December 2001 in which a petition under 37 CFR 1.182 is not provided will not be entered.

CONCLUSION

For the reasons above, submission of five separate sets of papers to enter the National Stage is improper.

A proper response to this notification must be filed within TWO (2) MONTHS from the mail date of this decision. A proper response includes filing a petition under 37 CFR 1.182, with the appropriate petition fee, for each or any of the additional sets of papers filed 21 December 2001 and 26 December 2001 which applicants intends to convert to 37 CFR 1.111(a) applications or respective

statements for any of the four additional sets of papers filed 21 December 2001 and 26 December 2001 which applicants do not intend to convert to 37 CFR 1.111(a) applications. Extensions of time may be obtained under 37 CFR 1.136(a).

Any further correspondence with respect to this matter should be addressed to the Assistant Commissioner of Patents, Box PCT, Washington, D.C., 20231, with the contents of the letter marked to the attention of the PCT Legal Office.

Gregory Vidovich
PCT Legal Detailee
PCT Legal Office
Telephone: 703-308-1315
Facsimile: 703-308-6459

Leonard Smith
PCT Legal Examiner
PCT Legal Office

16 DEC 2003

UNITED STATES PATENT AND TRADEMARK OFFICE

COMMISSIONER FOR PATENTS
UNITED STATES PATENT AND TRADEMARK OFFICE
P.O. BOX 1450
ALEXANDRIA, VA 22313-1450
www.uspto.gov

CROWELL & MORING LLP
Intellectual Property Group
P.O. Box 14300
Washington, DC 20044-4300

In re Application of :
BENCZUR-UERMOESSEY, Gabor *et al* :
Application No.: 10/019,259 :
PCT No.: PCT/EP00/05376 :
Int. Filing Date: 10 June 2000 :
Priority Date: 29 June 1999 : **DECISION**
Attorney Docket No.: 979/50805 :
For: ELECTRODE WITH A CAPACITY OF :
STORE HYDROGEN AND A METHOD :
FOR ITS PRODUCTION :

This decision is in response to applicants' "Response to Notification of Defective Response" filed 20 August 2002 which is treated as a petition under 37 CFR 1.182.

12/17/2003 LLANDGRA 00000107 051323 10019259

01 FC:1460 130.00 DA

BACKGROUND

On 19 March 2002, the United States Designated/Elected Office (DO/EO/US) mailed a Notification of Missing Requirements Under 35 U.S.C. 371 (Form PCT/DO/EO/905) indicating that a declaration in compliance with 37 CFR 1.497(a) and (b) must be provided. Applicants were given two months to respond with extensions of time available under 37 CFR 1.136(a).

On 20 May 2002, applicants filed a declaration signed by all three inventors. However, the last name of one of the inventors was not the same as listed in the international publication, *i.e.*, Dagmar Nowak and Dagmar Waidelich. There was no indication in the file that a name change was approved by the International Bureau.

On 29 July 2002, the DO/EO/US mailed a Notification of Defective Response (Form PCT/DO/EO/916) indicating that the declaration filed 20 May 2002 does not comply with 37 CFR 1.497(a) and (b) because the third inventor's name was recorded different from the name listed on the international application. Applicants were given one month, or any time remaining in the Form PCT/DO/EO/905 to respond, whichever is longer.

On 20 August 2002, applicants filed the instant petition which was accompanied by, *inter alia*, a copy of a marriage certificate, a "Statement by Inventor Regarding Name Change" and authorization to charge any required fees to Deposit Account No. 05-1323.

DISCUSSION

MPEP § 605.04(c) lists the procedures required to petition to change the name of an inventor and states, in part:

> The petition must include an appropriate petition fee and an affidavit signed with both names and setting forth the procedure whereby the change of name was effected, or a certified copy of the court order.

Here, applicants provided a declaration recording the change of name of Dagmar WAIDELICH to Dagmar NOWAK and signed by the co-inventor. Ms. Nowak declares that the name change was as a result of marriage. A copy of a marriage certificate in the German language dated 01 September 2000 was provided. The petition fee of $130.00 has been charged to Deposit Account No. 05-1323 as authorized. This is sufficient for a grantable petition.

CONCLUSION

For the reasons listed above, applicants' petition under 37 CFR 1.182 to change the name of the inventor is hereby **GRANTED**.

The declaration filed 20 May 2002 now complies with the requirements of 37 CFR 1.497(a) and (b).

Applicants have completed the requirements for acceptance under 35 U.S.C. 371(c). The application has an international filing date of 10 June 2000, under 35 U.S.C. 363, and a 35 U.S.C. 371 date of 20 May 2002.

This application is being forwarded to the National Stage Processing Division of the Office of PCT Operations for continued processing

James Thomson
Attorney Advisor
Office of PCT Legal Administration

Tel.: (703) 308-6457

SPE RESPONSE FOR CERTIFICATE OF CORRECTION

Paper No.: _____

DATE : 12/28/04

TO SPE OF : ART UNIT 1621

SUBJECT : Request for Certificate of Correction on Patent No.: 6784310

A response is requested with respect to the accompanying request for a certificate of correction.

Please complete this form and return with file, within 7 days to:
Certificates of Correction Branch - PK 3-915
Palm location **7580** - Tel. No. 305-8309

With respect to the change(s) requested, correcting Office and/or Applicant's errors, should the patent read as shown in the certificate of correction? No new matter should be introduced, nor should the scope or meaning of the claims be changed.

Lamonte Newsome

Thank You For Your Assistance

Certificates of Correction Branch

The request for issuing the above-identified correction(s) is hereby:
Note your decision on the appropriate box.

- ☒ **Approved** — All changes apply.
- ☐ **Approved in Part** — Specify below which changes do not apply.
- ☐ **Denied** — State the reasons for denial below.

Comments:

SAMUEL BARTS
PRIMARY EXAMINER
GROUP 1200

Acting SPE

1621
Art Unit

DO NOT SEND TO WAREHOUSE

SPE RESPONSE FOR CERTIFICATE OF CORRECTION

DATE : 5-2-05 Paper No.: _____

TO SPE OF : ART UNIT 2832 - B. ROJAS

SUBJECT : Request for Certificate of Correction on Patent No.: 6838965B1

A response is requested with respect to the accompanying request for a certificate of correction.

Please complete this form and return with file, within 7 days to:
Certificates of Correction Branch - PK 3-915
Palm location **7580** - Tel. No. 305-8309

With respect to the change(s) requested, correcting Office and/or Applicant's errors, should the patent read as shown in the certificate of correction? No new matter should be introduced, nor should the scope or meaning of the claims be changed.

Should Item (56) Change?

R JOHNSON
Certificates of Correction Branch

Thank You For Your Assistance

The request for issuing the above-identified correction(s) is hereby:
Note your decision on the appropriate box.

- ☐ Approved — All changes apply.
- ☒ Approved in Part — Specify below which changes do not apply.
- ☐ Denied — State the reasons for denial below.

Comments:

Item 56, in IDS filed by Applicant on 12/24/03, US 6,230,763 is the cited document number.

SPE

AU-2832
Art Unit

PTOL-306 (REV. 7/03)

U.S. DEPARTMENT OF COMMERCE Patent and Trademark Office

15 JAN 2003

#8

UNITED STATES PATENT AND TRADEMARK OFFICE

COMMISSIONER FOR PATENTS
UNITED STATES PATENT AND TRADEMARK OFFICE
WASHINGTON, D.C. 20231
www.uspto.gov

Myra H. McCormack
Johnson & Johnson Plaza
New Brunswick, NJ 08933-7003

In re Application of
MASURE, et al.
U.S. Application No.: 10/019,337
PCT No.: PCT/EP00/04918
Int. Filing Date: 26 March 2000
Priority Date: 29 June 1999
Attorney Docket No.: JAB-1512
For: NEUROTROPHIC FACTOR RECEPTOR

COMMUNICATION AND NOTIFICATION OF ABANDONMENT

This communication is in response to the "Petition For Extension of Time" and "Response to Notification of Defective Response" filed 30 December 2002 in the United States Patent and Trademark Office (USPTO).

BACKGROUND

On 26 March 2000, applicant filed international application PCT/EP00/04918, which claimed priority of an earlier application filed 29 June 1999. A Demand for international preliminary examination electing the United States was filed prior to the expiration of nineteen months from the priority date. Accordingly, the thirty-month period for paying the basic national fee in the United States expired at midnight on 29 December 2001.

On 19 December 2001, applicant filed a transmittal letter for entry into the national stage in the United States, which was accompanied by, inter alia: payment of the basic national fee; an executed declaration; an Information Disclosure Statement and a First Preliminary Amendment.

On 06 March 2002, applicant was mailed a "NOTIFICATION OF MISSING REQUIREMENTS UNDER 35 U.S.C. 371" (Form PCT/DO/EO/905) informing applicant of the need to provide a nucleotide and/or amino acid sequence disclosure in compliance with 37 CFR 1.821-1.825. Applicant was afforded two months to file the response.

On 17 April 2002, applicant responded with an amendment to the specification; applicant did not include a computer readable diskette version of the sequence listing.

On 28 June 2002, applicant was mailed a "NOTIFICATION OF DEFECTIVE RESPONSE" (Form PCT/DO/EO/916) informing applicant that the sequence listing filed 17 April 2002 did not comply 37 CFR 1.821-1.825 and thus was not a proper response to the Form PCT/DO/EO/905 mailed 06 March 2002. Applicant was afforded one month from the mailing of the Form PCT/DO/EO/916 or within the time remaining in the response set forth in the Form PCT/DO/EO/905, whichever was longer.

Application No.: 10/019,337

On 30 December 2002, applicant filed the present petition and response considered herein.

DISCUSSION

The above-identified application was **ABANDONED** on 06 October 2002 for failure to respond to the Form PCT/DO/EO/916 within the time period prescribed therein. Applicant is seeking a five month extension of time from the mail date of the Form PCT/DO/EO/916. However, the only extendable time available was to be calculated from the mail date of the Form PCT/DO/EO/905 mailed 06 March 2002. Thus, the response filed 30 December 2002 is untimely.

RECOMMENDATION

Applicants may wish to consider filing a petition to the Commissioner under 37 CFR 1.137(a) or (b) requesting that the application be revived. Any petition filed under 37 CFR 1.137(a) and/or a petition under 37 CFR 1.137(b) requesting that the application be revived must meet the criteria indicated in the recent revision of 37 CFR 1.137. See 62 Fed. Reg. 53131 (October 10, 1997); 1203 Off. Gaz. Pat. Office 63 (October 21, 1997) (Effective Date: 01 December 1997).

This recommendation to file a petition under 37 CFR 1.137(a) or (b) should not be construed as an indication as to whether or not any such petition(s) will be favorably considered.

CONCLUSION

The application is **ABANDONED** as to the United States of America.

This application is being forwarded to the United States Designated/Elected Office (DO/EO/US) for mailing of a "Notification of Abandonment" (Form PCT/DO/EO/909).

Any further correspondence with respect to this matter should be addressed to the Assistant Commissioner for Patents, Box PCT, Washington, D.C. 20231, with the contents of the letter marked to the attention to the PCT Legal Office

Richard Cole
Legal Examiner
PCT Legal Office

Derek A. Putonen
Attorney Advisor
PCT Legal Office
Tel: (703) 305-0130
Fax: (703) 308-6459

07 MAY 2003

UNITED STATES PATENT AND TRADEMARK OFFICE

COMMISSIONER FOR PATENTS
UNITED STATES PATENT AND TRADEMARK OFFICE
P.O. BOX 1450
ALEXANDRIA, VA 22313-1450
www.uspto.gov

Myra H. McCormack
One Johnson & Johnson Plaza
New Brunswick, NJ 08933-7003

In re Application of	:	
MASURE, et al.	:	
U.S. Application No.: 10/019,337	:	DECISION ON PETITION
PCT No.: PCT/EP00/04918	:	
Int. Filing Date: 26 March 2000	:	UNDER 37 CFR 1.137(b)
Priority Date: 29 June 1999	:	
Attorney Docket No.: JAB-1512	:	
For: NEUROTROPHIC FACTOR RECEPTOR	:	

This decision is in response to applicant's "Petition For Revival of patent Application Abandoned Unintentionally Under 37 CFR 1.137(b)" filed 29 March 2002. Applicant included authorization to charge the $1300.00 petition fee to Deposit Account No.: 10-0750.

BACKGROUND

On 26 March 2000, applicant filed international application PCT/EP00/04918, which claimed priority of an earlier application filed 29 June 1999. A Demand for international preliminary examination, in which the United States was elected was filed prior to the expiration of nineteen months from the priority date. Accordingly, the thirty-month period for paying the basic national fee in the United States expired at midnight on 29 December 2001.

On 19 December 2001, applicant filed the present petition accompanied by a check in the amount of $1280.00; a transmittal letter for entering the U.S. national stage under 35 U.S.C. 371; payment of the U.S. basic national fee; a First preliminary amendment; a copy of the published international application; an executed oath or declaration of the inventors; an assignment document for recording; a sequence disk and a sequence listing.

On 06 March 2002, applicant was mailed a "NOTIFICATION OF MISSING REQUIREMENTS UNDER 35 U.S.C. 371" (Form PCT/DO/EO/905) informing applicant of the need to provide a nucleotide and/or amino acid sequence disclosure in compliance with 37 CFR 1.821-1.825. Applicant was afforded two months to file the response.

On 17 April 2002, applicant responded with an amendment to the specification; applicant did not include a computer readable diskette version of the sequence listing.

On 28 June 2002, applicant was mailed a "NOTIFICATION OF DEFECTIVE RESPONSE" (Form PCT/DO/EO/916) informing applicant that the sequence listing filed 17 April 2002 did not comply 37 CFR 1.821-1.825 and thus was not a proper response to the Form

PCT/DO/EO/905 mailed 06 March 2002. Applicant was afforded one month from the mailing of the Form PCT/DO/EO/916 or within the time remaining in the response set forth in the Form PCT/DO/EO/905, whichever was longer.

On 30 December 2002, applicant filed a petition for an extension of time and response to the notice of a defective response.

On 15 January 2003, applicant was mailed a communication and notice of abandonment informing applicant that the above-identified application was abandoned on 06 October 2002 for failure to respond to the Form PCT/DO/EO/916 within the time period prescribed therein and advised to file a petition for revival.

On 21 January 2003, applicant was mailed a "Notification of Abandonment" (Form PCT/DO/EO/909).

On 06 February 2003, applicant filed the present petition to revive pursuant to 37 CFR 1.137(b).

DISCUSSION

A petition under 37 CFR 1.137(b) requesting that the application be revived on the grounds of unintentional abandonment must be accompanied by (1) the required reply, (2) the petition fee required by law, (3) a statement that the, "entire delay in filing the required reply from the due date for the reply until the filing of a grantable petition pursuant to this paragraph was unintentional" and (4) any terminal disclaimer and fee pursuant to 37 CFR 1.137(c) (where required).

With regard to Item (2), applicant included authorization to charge the $1300.00 petition fee to Deposit Account No.: 10-0750.

As to Item (3), applicant's statement that "the entire delay in filing the required reply from the due date for the required reply until the filing of a grantable petition under 37 CFR 1.137(b) was unintentional" satisfies Item (3).

With regard to Item (4), the terminal disclaimer is not required since this application was filed after 08 June 1995.

Thus, applicant has satisfied Items (2) - (4) above.

However, with regard to Item (1), the proper response was the required sequence listing pursuant to 37 CFR 1.821-1.825. The computer readable form accompanying the present petition was not readable. (See attached copy of CRF Problem Report.) Accordingly, the proper reply has not been furnished.

For the reasons stated above, the petition for revival cannot be granted at this time and the application remains abandoned.

CONCLUSION

For the reasons stated above, applicant's petition under 37 CFR 1.137(b) is **DISMISSED**.

If reconsideration on the merits of this petition is desired, a proper response must be filed within **TWO (2) MONTHS** from the mail date of this decision. Any reconsideration request should include a cover letter entitled "Renewed Petition Under 37 CFR 1.137(b)." No additional petition fee is required.

Please direct further correspondence with respect to this matter to the Mail Stop PCT, Commissioner for Patents, Office of PCT Legal Administration, P.O. Box 1450, Alexandria, Virginia 22313-1450, with the contents of the letter marked to the attention of the Office of PCT Legal Administration.

Derek A. Putonen
Attorney Advisor
Office of PCT Legal Administration
Tel: (703) 305-0130
Fax: (703) 308-6459

D. Putonen

PCT/10

BIOTECHNOLOGY SYSTEMS BRANCH

CRF Problem Report

The Scientific and Technical Information Center (STIC) experienced a problem when processing the following computer readable form (CRF):

Application Serial Number: 10/019,337C
Filing Date: 12/19/2001
Date Processed by STIC: 5/6/2003

STIC Contact: **Mark Spencer, 703-308-4212**

Nature of Problem:

The CRF (was): melted
✓ (circle one) Damaged or Unreadable (for Unreadable, see attached)
____ Blank (no files on CRF) (see attached)
____ Empty file (filename present, but no bytes in file) (see attached)
____ Virus-infected. Virus name: _____ The STIC will not process the CRF.
____ Not saved in ASCII text
____ Sequence Listing was embedded in the file. According to Sequence Rules, submitted file should **only** be the Sequence Listing.
____ Did not contain a Sequence Listing. (see attached sample)
____ Other:

PLEASE USE THE CHECKER VERSION 4.0 PROGRAM TO REDUCE ERRORS. SEE BELOW FOR ADDRESS:

http:/www.uspto.gov/web/offices/pac/checker

Applicants submitting genetic sequence information electronically on diskette or CD-Rom should be aware that there is a possibility that the disk/CD-Rom may have been affected by treatment given to all incoming mail.
Please consider using alternate methods of submission for the disk/CD-Rom or replacement disk/CD-Rom.
Any reply including a sequence listing in electronic form should NOT be sent to the 20231 zip code address for the United States Patent and Trademark Office, and instead should be sent via the following to the indicated addresses:

1. EFS-Bio (<**http://www.uspto.gov/ebc/efs/downloads/documents.htm**>, **EFS Submission User Manual** - ePAVE)
2. **U.S. Postal Service**: Commissioner for Patents, P.O. Box 1450, Alexandria, VA 22313-1450
3. **Hand Carry directly to:**
   U.S. Patent and Trademark Office, Technology Center 1600, Reception Area, 7th Floor, Examiner Name, Sequence Information, Crystal Mall One, 1911 South Clark Street, Arlington, VA 22202
   Or
   U.S. Patent and Trademark Office, Box Sequence, Customer Window, Lobby, Room 1B03, Crystal Plaza Two, 2011 South Clark Place, Arlington, VA 22202
4. **Federal Express, United Parcel Service, or other delivery service to:** U.S. Patent and Trademark Office, Box Sequence, Room 1B03-Mailroom, Crystal Plaza Two, 2011 South Clark Place, Arlington, VA 22202

Revised 04/24/2003

UNITED STATES PATENT AND TRADEMARK OFFICE

0 8 MAY 2003

#5

COMMISSIONER FOR PATENTS
UNITED STATES PATENT AND TRADEMARK OFFICE
P.O. BOX 1450
ALEXANDRIA, VA 22313-1450
www.uspto.gov

Myra H. McCormack
One Johnson & Johnson Plaza
New Brunswick, NJ 08933-7003

In re Application of	:	
MASURE, et al.	:	
U.S. Application No.: 10/019,337	:	DECISION ON PETITION
PCT No.: PCT/EP00/04918	:	
Int. Filing Date: 26 March 2000	:	UNDER 37 CFR 1.137(b)
Priority Date: 29 June 1999	:	
Attorney Docket No.: JAB-1512	:	
For: NEUROTROPHIC FACTOR RECEPTOR	:	

This decision is in response to applicant's "Petition For Revival of patent Application Abandoned Unintentionally Under 37 CFR 1.137(b)" filed 29 March 2002. Applicant included authorization to charge the $1300.00 petition fee to Deposit Account No.: 10-0750.

BACKGROUND

On 26 March 2000, applicant filed international application PCT/EP00/04918, which claimed priority of an earlier application filed 29 June 1999. A Demand for international preliminary examination, in which the United States was elected was filed prior to the expiration of nineteen months from the priority date. Accordingly, the thirty-month period for paying the basic national fee in the United States expired at midnight on 29 December 2001.

On 19 December 2001, applicant filed the present petition accompanied by a check in the amount of $1280.00; a transmittal letter for entering the U.S. national stage under 35 U.S.C. 371; payment of the U.S. basic national fee; a First preliminary amendment; a copy of the published international application; an executed oath or declaration of the inventors; an assignment document for recording; a sequence disk and a sequence listing.

On 06 March 2002, applicant was mailed a "NOTIFICATION OF MISSING REQUIREMENTS UNDER 35 U.S.C. 371" (Form PCT/DO/EO/905) informing applicant of the need to provide a nucleotide and/or amino acid sequence disclosure in compliance with 37 CFR 1.821-1.825. Applicant was afforded two months to file the response.

On 17 April 2002, applicant responded with an amendment to the specification; applicant did not include a computer readable diskette version of the sequence listing.

On 28 June 2002, applicant was mailed a "NOTIFICATION OF DEFECTIVE RESPONSE" (Form PCT/DO/EO/916) informing applicant that the sequence listing filed 17 April 2002 did not comply 37 CFR 1.821-1.825 and thus was not a proper response to the Form

PCT/DO/EO/905 mailed 06 March 2002. Applicant was afforded one month from the mailing of the Form PCT/DO/EO/916 or within the time remaining in the response set forth in the Form PCT/DO/EO/905, whichever was longer.

On 30 December 2002, applicant filed a petition for an extension of time and response to the notice of a defective response.

On 15 January 2003, applicant was mailed a communication and notice of abandonment informing applicant that the above-identified application was abandoned on 06 October 2002 for failure to respond to the Form PCT/DO/EO/916 within the time period prescribed therein and advised to file a petition for revival.

On 21 January 2003, applicant was mailed a "Notification of Abandonment" (Form PCT/DO/EO/909).

On 06 February 2003, applicant filed the present petition to revive pursuant to 37 CFR 1.137(b).

DISCUSSION

A petition under 37 CFR 1.137(b) requesting that the application be revived on the grounds of unintentional abandonment must be accompanied by (1) the required reply, (2) the petition fee required by law, (3) a statement that the, "entire delay in filing the required reply from the due date for the reply until the filing of a grantable petition pursuant to this paragraph was unintentional" and (4) any terminal disclaimer and fee pursuant to 37 CFR 1.137(c) (where required).

With regard to Item (2), applicant included authorization to charge the $1300.00 petition fee to Deposit Account No.: 10-0750.

As to Item (3), applicant's statement that "the entire delay in filing the required reply from the due date for the required reply until the filing of a grantable petition under 37 CFR 1.137(b) was unintentional" satisfies Item (3).

With regard to Item (4), the terminal disclaimer is not required since this application was filed after 08 June 1995.

Thus, applicant has satisfied Items (2) - (4) above.

However, with regard to Item (1), the proper response was the required sequence listing pursuant to 37 CFR 1.821-1.825. The computer readable form accompanying the present petition was not readable. (See attached copy of CRF Problem Report.) Accordingly, the proper reply has not been furnished.

For the reasons stated above, the petition for revival cannot be granted at this time and the application remains abandoned.

CONCLUSION

For the reasons stated above, applicant's petition under 37 CFR 1.137(b) is **DISMISSED**.

If reconsideration on the merits of this petition is desired, a proper response must be filed within **TWO (2) MONTHS** from the mail date of this decision. Any reconsideration request should include a cover letter entitled "Renewed Petition Under 37 CFR 1.137(b)." No additional petition fee is required.

Please direct further correspondence with respect to this matter to the Mail Stop PCT, Commissioner for Patents, Office of PCT Legal Administration, P.O. Box 1450, Alexandria, Virginia 22313-1450, with the contents of the letter marked to the attention of the Office of PCT Legal Administration.

Derek A. Putonen
Attorney Advisor
Office of PCT Legal Administration
Tel: (703) 305-0130
Fax: (703) 308-6459

26 AUG 2003

#15

UNITED STATES PATENT AND TRADEMARK OFFICE

COMMISSIONER FOR PATENTS
UNITED STATES PATENT AND TRADEMARK OFFICE
P.O. BOX 1450
ALEXANDRIA, VA 22313-1450
www.uspto.gov

Laura A. Donnelly
One Johnson & Johnson Plaza
New Brunswick, NJ 08933-7003

In re Application of	:	
MASURE, et al.	:	
U.S. Application No.: 10/019,337	:	DECISION ON RENEWED
PCT No.: PCT/EP00/04918	:	
Int. Filing Date: 26 March 2000	:	PETITION UNDER
Priority Date: 29 June 1999	:	
Attorney Docket No.: JAB-1512	:	37 CFR 1.137(b)
For: NEUROTROPHIC FACTOR RECEPTOR	:	

The renewed petition to revive under 37 CFR 1.137(b) filed 27 June 2003 in the above-captioned application is hereby **GRANTED** as follows:

On 08 May 2003, applicant was mailed a decision dismissing applicant's petition under 37 CFR 1.137(b). As detailed in the decision, a petition under 37 CFR 1.137(b) requesting that the application be revived on the grounds of unintentional abandonment must be accompanied by (1) the required reply, (2) the petition fee required by law, (3) a statement that the, "entire delay in filing the required reply from the due date for the reply until the filing of a grantable petition pursuant to this paragraph was unintentional" and (4) any terminal disclaimer and fee pursuant to 37 CFR 1.137(c) (where required). Applicant previously satisfied items (2) - (4) above.

A review of the application file reveals that applicant has currently satisfied item (1) in providing a Sequence Listing for the present application. As such, the requirements of 37 CFR 1.137(b) have been satisfied. Therefore, the request to revive the application abandoned under 35 U.S.C. 371(d) is granted as to the National stage in the United States of America.

This application is being returned to the United States Designated/Elected Office for processing in accordance with this decision. The 35 U.S.C. 371(c) date is **19 December 2001**.

Derek A. Putonen
Attorney Advisor
Office of PCT Legal Administration
Tel: (703) 305-0130
Fax: (703) 308-6459

16 SEP 2002

UNITED STATES PATENT AND TRADEMARK OFFICE

COMMISSIONER FOR PATENTS
UNITED STATES PATENT AND TRADEMARK OFFICE
WASHINGTON, D.C. 20231
www.uspto.gov

MORGAN & FINNEGAN, LLP
345 Park Avenue
New York, NY 10154

In re Application of DENTON, Richard Rex *et al* U.S. Application No.: 10/019,342 Filing Date: 21 December 2001 Attorney Docket No.: 2458-4042US5 For: METHODS FOR OBTAINING AND USING HAPLOTYPE DATA	**DECISION ON PETITION UNDER 37 CFR 1.182**

This decision is in response to applicants' petition filed via facsimile on 27 June 2002 requesting to to convert the above-captioned national stage application to an application pursuant to 35 U.S.C. 111(a) which is treated as a petition under 37 CFR 1.182 and is hereby **GRANTED**.

Applicants originally submitted this application as a national stage filing pursuant to 35 U.S.C. 371 of international application PCT/US00/17540 on 21 December 2001 which included a copy of the international application and a preliminary amendment. However, applicants filed five separate national stage applications of the aforementioned international application.

As stated in the decision mailed 14 June 2002, this is not permitted. A proper response would be to file a petition pursuant to 37 CFR 1.182. Accordingly, applicants request that the above-identified application be treated as an application under 35 U.S.C. 111(a) pursuant to 37 CFR 1.182 which has been accorded.

The fee for the basic national fee of $710.00 (Fee Code 956) has been changed to a basic filing fee for a utility application of $740.00 (Fee Code 101). The $30.00 difference and the $130.00 petition fee (Fee Code 122) have been charged to Deposit Account No. 13-4500 as authorized. Fee Codes 964, 966 and 968 for extra independent claims, extra claims and multiple dependent claims have been changed to Fee Codes 102, 103 and 104 respectively. There is no difference in cost for these claims.

Any period of adjustment to the term of a patent under 35 U.S.C. 154(b)(May 29, 2000) may be reduced by the period of time beginning on the filing date accorded under 35 U.S.C. 11 and ending on the mailing date of this decision. *See* 37 CFR 1.704(a).

This application is being forwarded to the Office of Initial Patent Examination for further processing under 35 U.S.C. 111(a) with a filing date of **21 December 2001**.

Leonard Smith
PCT Legal Examiner
PCT Legal Office

James Thomson
Attorney Advisor
PCT Legal Office

Tel.: (703) 308-6457

SPE RESPONSE FOR CERTIFICATE OF CORRECTION

Paper No.: _____

DATE : March 08, 2007

TO SPE OF : ART UNIT 1624

SUBJECT : Request for Certificate of Correction on Patent No.: **7071192 B1 – 10/019376**

A response is requested with respect to the accompanying request for a certificate of correction.

Please complete this form and return with file, within **7** days to:
Palm location **7580, Certificates of Correction Branch – South Tower – 9A22**
If response is for an IFW, **return to employee (named below) via PUBSCofC Team in MADRAS.**
With respect to the change(s) requested, correcting Office and/or Applicant's errors, should the patent read as shown in the certificate of correction (COCIN)? No new matter should be introduced, nor should the scope or meaning of the claims be changed.

Thank You For Your Assistance

Elisha Evans
Certificates of Correction Branch
Tel. No. 703-308-9390 EXT 110

The request for issuing the above-identified correction(s) is hereby:
Note your decision on the appropriate box.

- ☐ **Approved** — **All** changes apply.
- ☐ **Approved in Part** — Specify below which changes **do not** apply.
- ☑ **Denied** — State the reasons for denial below.

Comments:

In going through the certificate of correction I found at least 20 that were not corrected properly including the insertion of one which would be rejected under 112-2nd paragraph for "such as". See MPEP § 2173.05(d)

SPE ZACHARY TUCKER 1624 Art Unit

ACTING SPE,
FOR JAMES O. WILSON

UNITED STATES PATENT AND TRADEMARK OFFICE

Commissioner for Patents
United States Patent and Trademark Office
P.O. Box 1450
Alexandria, VA 22313-1450
www.uspto.gov

May 3, 2007

Patent No. : 7071192 B1
Ser. No. : 10/019376
Inventor(s) : Janssens, et al.
Issued : July 4, 2006
Title : **RESPIRATORY SYNCYTIAL VIRUS REPLICATION INHIBITORS**
Docket No. : JANS-0028

Re: Request for Certificate of Correction

Consideration has been given your request for the issuance of a certificate of correction for the above-identified patent under the provisions of Rule(s) 1.322 and/or 1.323.

In going through the certificate of correction I found at least 20 that were not corrected properly including the insertion of one which would be rejected under 112-2nd paragraph for "such as". See MPEP 2173.05(d).

In view of the foregoing, your request is hereby denied.

Future correspondence concerning this matter should be filed and directed to Decisions & Certificates of Correction Branch.

Elisha Evans
For Cecelia Newman
Decisions & Certificates
of Correction Branch
(703) 308-9390 ext. 110 or (703) 308-8309

Woodcock Washburn LLP
Cira Centre
2929 Arch Street, 12th Floor
Philadelphia, PA 19104-2891

CBN/eme

SPE RESPONSE FOR CERTIFICATE OF CORRECTION

DATE : 8/6/08

Paper No.: —

TO SPE OF : ART UNIT 1624

SUBJECT : Request for Certificate of Correction for Appl. No.: 10/019376 Patent No: 707192 B1

A response is requested with respect to a request for a certificate of correction.

With respect to the change(s) requested to correct Office and/or Applicant's errors, should the patent read as shown in the certificate of correction attached herewith or the COCIN document(s), in IFW images for the above-identified patented application? No new matter should be introduced, nor should the scope or meaning of the claims be changed.

If the response is for an IFW, within 7 days, please complete and forward the response, to the employee (named below) via scanning into application images, using document code **COCX**.

If the response is for a paper file wrapper, please complete the response and forward the response with the paper file wrapper, to the employee (named below), within 7 days, to:

Certificates of Correction Branch (CofC)
South Tower - 9A22
Palm Location 7580

VIRGINIA TOLBERT
Certificates of Correction Branch
703-308-9390 ext. 113

Thank You For Your Assistance

The request for issuing the above-identified correction(s) is hereby:
Note your decision on the appropriate box.

- ☐ **Approved** — All changes apply.
- ☐ **Approved in Part** — Specify below which changes **do not** apply.
- ☑ **Denied** — State the reasons for denial below.

Comments: The applicant is attempting to reinstate that which was deleted to overcome rejections.

JAMES O. WILSON
SUPERVISORY PATENT EXAMINER
TECHNOLOGY CENTER 1600
SPE

1624
Art Unit

UNITED STATES PATENT AND TRADEMARK OFFICE

Commissioner for Patents
United States Patent and Trademark Office
P.O. Box 1450
Alexandria, VA 22313-1450
www.uspto.gov

Date: February 26, 2009

Woodcock Washburn
Cira Centre
2929 Arch Street, 12th Floor
Philadelphia, PA 19104-2891

Patent No: 7,071,192 B1
Application No.: 10/019,376
Applicant: Frans Eduard Janssens
Issued: July 4, 2006
Title: **RESPIRATORY SYNCYTIAL VIRUS REPLICATION INHIBITORS**

Request for Certificate of Correction:

Consideration has been given to your request for the issuance of a certificate of correction for the above-identified patent under the provisions of Rules 1.322/1.323.

Per the examiner "The applicant is attempting to reinstate that which was deleted to overcome rejections".

In view of the foregoing, your request in this matter is hereby **denied.**

Future correspondence concerning this matter should be filed and directed to Decisions & Certificate of Correction Branch.

Virginia Tolbert
For Mary Diggs, Supervisor
Decisions and Certificate of Correction
(703) 305-8309 or 308-9390 ext. 113

vt

30 MAY 2003

UNITED STATES PATENT AND TRADEMARK OFFICE

COMMISSIONER FOR PATENTS
UNITED STATES PATENT AND TRADEMARK OFFICE
WASHINGTON, DC 20231
www.uspto.gov

John P. Ward
Blakely, Sokoloff, Taylor & Zafman
12400 Wilshire Boulevard
Seventh Floor
Los Angeles, CA 90025-1026

In re Application of	:
Guo et al.	:
Application No.: 10/019,381	: DECISION ON
PCT No.: PCT/CN00/00299	:
Int. Filing Date: 30 September 2000	: PETITION
Attorney's Docket No.: 42390.P9268	:
For: METHOD AND SYSTEM TO SCALE DOWN	: UNDER 37 CFR 1.47(b)
A DECISION TREE-BASED HIDDEN MARKOV	:
MODEL (HMM) FOR SPEECH RECOGNITION	:

This is a decision in response to the "PETITION FOR FILING BY OTHER THAN ALL THE INVENTORS PURSUANT TO 37 C.F.R. § 1.47(b)" filed on 04 December 2002 to accept the application without the signatures of inventors Qing Guo, Yonghong Yan and Baosheng Yuan.

BACKGROUND

On 30 September 2000, applicant filed international application PCT/CN00/00299. A copy of the international application was communicated to the United States Patent and Trademark Office from the International Bureau on 11 April 2002. Accordingly, the thirty-month period for paying the basic national fee for the national stage in the United States expired at midnight on 30 March 2003.

On 27 December 2001, applicant filed a letter for entry into the national stage in the United States which was accompanied by a copy of the international application and the basic national fee of $1040 as required by 35 U.S.C. 371(c). These papers were assigned application number 10/019,381.

On 04 June 2002, the United States Patent and Trademark mailed the "NOTIFICATION OF MISSING REQUIREMENTS UNDER 35 U.S.C. 371 IN THE UNITED STATES DESIGNATED/ELECTED OFFICE (DO/EO/US)" (Form

PCT/DO/EO/905) indicating that applicant was required to file an oath/declaration and a surcharge fee. The notification set a two-month time period in which to respond.

On 04 December 2002, applicant filed a "Petition Under 37 CFR 1.47(b) to Accept Application Without Inventor's Signature."

In order to satisfy the requirements of 35 U.S.C. 371(c)(4), on 04 December 2002, applicants filed the following papers:

1) a Response to Notification of Missing Requirements under 35 U.S.C. 371 in the United States Designated/Elected Office (DO/EO/US) including a Petition under 37 CFR 1.47(a);

2) the required petition fee;

3) a petition for a four month extension of time and the required petition fee; and,

4) an declaration of Judy L. Steinkraus and various documents intended to show that inventors Qing Guo, Yonghong Yan and Baosheng Yuan cannot be found or reached to sign the application papers and giving their last known address.

DISCUSSION

A petition under 37 CFR 1.47(b) must be accompanied by (1) the fee under 37 CFR 1.17(h), (2) factual proof that the inventor refuses to execute the application or cannot be reached after diligent effort; (3) a statement of the last known address of the inventor, (4) an oath or declaration by the 37 CFR 1.47(b) applicant on behalf of and as agent for the non-signing inventor, (5) proof that the 37 CFR 1.37(b) applicant has sufficient proprietary interest in the application, and (6) a showing that such action is necessary to preserve the rights of the parties or to prevent irreparable damage. Applicant has not satisfied items (2), (4) and (5).

MPEP §409.03(b) states, in part:

> "Where inability to find or reach a nonsigning inventor "after diligent effort" is the reason for filing under 37 CFR 1.47, an affidavit or declaration of facts should be submitted that fully describes the exact facts which are relied on to establish that a diligent effort was made.
>
> The fact that a nonsigning inventor is on vacation or out of town and is therefore temporarily unavailable to sign the declaration is not an

acceptable reason for filing under 37 CFR 1.47. Such a petition will be dismissed as inappropriate.

The affidavit or declaration of facts must be signed, where at all possible, by a person having firsthand knowledge of the facts recited therein. Statements based on hearsay will not normally be accepted. Copies of documentary evidence such as certified mail return receipt, cover letter of instructions, telegrams, etc., that support a finding that the nonsigning inventor could not be found or reached should be made part of the affidavit or declaration. It is important that the affidavit or declaration contain statements of fact as opposed to conclusions."

With respect to item (2) above, there is no indication that a delivery of the application papers was ever attempted, nor is there any indication that any attempt has been made to locate the missing inventors. It appears that applicant merely asked someone else (Wei Wei Huang) to locate the inventors, and when she did not get back to Ms. Steinkraus, the decision was made to file the petition. Further, although applicant lists the last known addresses, applicant made no attempt to deliver the application papers to these addresses. Applicant needs to provide evidence that a diligent effort has been made to reach the inventors.

MPEP §409.03(b) states, in part:

"Where an application is executed by one other than the inventor, the declaration required by 37 CFR 1.63 must state the full name, residence, post office address, and citizenship of the nonsigning inventor. Also, the title or position of the person signing must be stated if signing on behalf of a corporation under 37 CFR 1.47(b)."

With respect to item (4) above, the declaration is unexecuted. Applicant has not provided a declaration signed by a person from Intel having authority to sign on Intel's behalf.

MPEP §409.03(f) states, in part:

"When an inventor has agreed in writing to assign an invention described in an application deposited pursuant to 37 CFR 1.47(b), a copy of that agreement should be submitted. If an agreement to assign is dependent on certain specified conditions being met, it must be established by a statement of facts by someone with first hand knowledge of the circumstances in which those conditions have been met. A typical agreement to assign is an employment agreement where an employee (nonsigning inventor) agrees to assign to his or her employer (37 CFR 1.47(b) applicant) all inventions made during employment. When such an agreement is relied on, it must be established by a statement of a person having firsthand knowledge of the facts that the invention was made by the employee while employed by the 37 CFR 1.47(b) applicant."

With respect to item (5) above, applicant has not submitted any evidence of sufficient proprietary interest in the application.

CONCLUSION

The petition under 37 CFR 1.47(b) is **DISMISSED**.

The **$130** surcharge for filing the oath/declaration after thirty months from the earliest priority has been **CHARGED** to applicant's **DEPOSIT ACCOUNT # 2-2666**.

If reconsideration on the merits of this petition is desired, a proper response must be filed within TWO (2) MONTHS from the mail date of this decision. Failure to timely submit the proper response will result in **ABANDONMENT**. Any reconsideration request should include a cover letter entitled "Renewed Petition Under 37 CFR 1.47(b)." No additional petition fee is required. Extensions of time may be obtained under 37 CFR 1.136(a).

Should status under 37 CFR 1.47(b) not be successfully completed, the international application will be viewed as becoming abandoned with respect to the United State at midnight at the expiration of the time period set in this decision or as extended by any extension see timely paid under 37 CFR 1.136(a).

Any further correspondence with respect to this matter should be addressed to the Mail Stop PCT, Commissioner for Patents, Office of PCT Legal Administration, P.O. Box 1450, Alexandria, Virginia 22313-1450, with the contents of the letter marked to the attention of the Office of PCT Legal Administration.

Debra S. Brittingham
PCT Special Programs Examiner
PCT Legal Office

Boris Milef
PCT Legal Examiner
PCT Legal Office

DSB/BM:dsb
Telephone: (703) 308-3401
Facsimile: (703) 308-6459

28 MAY 2004

UNITED STATES PATENT AND TRADEMARK OFFICE

COMMISSIONER FOR PATENTS
UNITED STATES PATENT AND TRADEMARK OFFICE
WASHINGTON, DC 20231
www.uspto.gov

John P. Ward
Blakely, Sokoloff, Taylor & Zafman
12400 Wilshire Boulevard
Seventh Floor
Los Angeles, CA 90025-1026

In re Application of Guo et al. Application No.: 10/019,381 PCT No.: PCT/CN00/00299 Int. Filing Date: 30 September 2000 Attorney's Docket No.: 42390.P9268 For: METHOD AND SYSTEM TO SCALE DOWN A DECISION TREE-BASED HIDDEN MARKOV MODEL (HMM) FOR SPEECH RECOGNITION	DECISION ON PETITION UNDER 37 CFR 1.47(a)

This is a decision in response to the "RESPONSE TO DECISION ON PETITION UNDER 37 C.F.R. § 1.47(b)" filed on 08 September 2003 to accept the application without the signature of inventor Qing Guo. This petition is being treated as a petition under 37 C.F.R. § 1.47(a).

BACKGROUND

On 30 September 2000, applicant filed international application PCT/CN00/00299. A copy of the international application was communicated to the United States Patent and Trademark Office from the International Bureau on 11 April 2002. Accordingly, the thirty-month period for paying the basic national fee for the national stage in the United States expired at midnight on 30 March 2003.

On 27 December 2001, applicant filed a letter for entry into the national stage in the United States which was accompanied by a copy of the international application and the basic national fee of $1040 as required by 35 U.S.C. 371(c). These papers were assigned application number 10/019,381.

On 04 June 2002, the United States Patent and Trademark mailed the "NOTIFICATION OF MISSING REQUIREMENTS UNDER 35 U.S.C. 371 IN THE UNITED STATES DESIGNATED/ELECTED OFFICE (DO/EO/US)" (Form

PCT/DO/EO/905) indicating that applicant was required to file an oath/declaration and a surcharge fee. The notification set a two-month time period in which to respond.

On 04 December 2002, applicant filed a "Petition Under 37 CFR 1.47(b) to Accept Application Without Inventor's Signature."

On 30 May 2003, a decision was mailed to applicant that indicated that applicant had not provided the non-signing inventors with a copy of the application.

On 08 September 2003, applicant filed the current response which included a declaration signed statement by Mr. James H. Salter, a statement of inventor Qing Guo's last known address, and declarations signed by inventors Yonghong Yan and Baosheng Yuan. In this response, applicant indicated that these papers were originally filed with the USPTO on 17 April 2003.

DISCUSSION

A petition under 37 CFR 1.47(a) must be accompanied by (1) the fee under 37 CFR 1.17(h), (2) factual proof that the missing joint inventor refuses to execute the application or cannot be reached after diligent effort, (3) a statement of the last known address of the missing, and (4) an oath or declaration by each 37 CFR 1.47(a) applicant on his or her own behalf and on behalf of the non-signing inventor.

With respect to item (1), the petition fee was paid in the earlier filed petition. With respect to item (2), applicant mailed a copy of the application papers to the last known address of inventor Qing Guo, and it was returned as undeliverable. Further, an effort was made to locate a different address through Intel, but no further address had been left by the inventor. With respect to item (3), applicants provided the statement of the last known address of the missing inventor. With respect to item (4), applicant has provided declarations signed by inventors Yonghong Yan and Baosheng Yuan.

CONCLUSION

The petition under 37 CFR 1.47(b) is **GRANTED**.

The Application Division and the International Division are authorized to accept the application as a 37 CFR 1.47(a) application and to mail a filing receipt. The application will be given an international filing date of 30 September 2000 under 35 U.S.C. 363, and a date of 17 April 2003 under 35 U.S.C. 371(c)(1), (c)(2) and (c)(4).

As provided in 37 CFR 1.47(a), a notice of the filing of this application will be forwarded to the non-signing inventor at his last known address of record.

A notice of the filing of the application under 37 CFR 1.47(a) will be published in the Official Gazette.

The application is being returned to the International Division for processing as the U.S. National Stage of the above-identified international application.

Debra S. Brittingham
PCT Special Programs Examiner
PCT Legal Office

Leonard Smith
PCT Legal Examiner
PCT Legal Office

DSB/BM:dsb
Telephone: (703) 308-3401
Facsimile: (703) 308-6459

28 MAY 2004

UNITED STATES PATENT and TRADEMARK OFFICE

COMMISSIONER FOR PATENTS
UNITED STATES PATENT AND TRADEMARK OFFICE
P.O. BOX 1450
ALEXANDRIA, VA 22313-1450

www.uspto.gov

Qing Guo
9 # 306, Dongshengyuan, Haidian District
Beijing 100082 P.R. China

In re Application of: Guo, et al.
Application No.: 10/019,381
PCT No.: PCT/CA01/01318
Int. Filing Date: 30 September 2000
Attorney's Docket No.: 42390.P9268
For: METOD AND SYSTEM TO SCALE DOWN A DECISION TREE-BASED HIDDEN MARKOV MODEL (HMM) FOR SPEECH RECOGNITION

Dear Mr. Guo:

You are named as an inventor in the above identified United States patent application, filed under the provisions of 37 CFR 1.47(a) and 35 U.S.C. 116. Should a patent be granted, you will be designated as an inventor.

As a named inventor, you are entitled to inspect any paper in the file wrapper of the application, order copies of all or any part thereof (at a prepaid cost per 37 CFR 1.19) or to make your position of record in the application. Alternatively, you may arrange to do any of the preceding through a registered patent agent or attorney presenting written authorization from you. If you care to join in the application, counsel of record (see below) would presumably assist you. Joining in the application would entail the filing of an appropriate oath or declaration by you pursuant to 37 CFR 1.63.

Debra S. Brittingham
PCT Legal Examiner
Telephone: (703) 308-3401
Facsimile: (703) 308-6459

Leonard Smith
PCT Legal Examiner
PCT Legal Office

Counsel of Record: James H. Salter
12400 Wilshire Boulevard
Seventh Floor
Los Angeles, CA 90025-1026

UNITED STATES PATENT and TRADEMARK OFFICE

COMMISSIONER FOR PATENTS
UNITED STATES PATENT AND TRADEMARK OFFICE
P.O. BOX 1450
ALEXANDRIA, VA 22313-1450

www.uspto.gov

OFFICIAL GAZETTE NOTICE

37 CFR 1.47 Notice by Publication

Notice is hereby given of the filing of an application with a petition under 37 CFR 1.47 requesting acceptance of the application without the signature of all inventors. The petition has been granted. A notice has been sent to the last known address of the non-signing inventor. The inventor whose signature is missing (Qing Guo) may join in the application by promptly filing an appropriate oath or Declaration complying with 37 CFR 1.63. The international application number is PCT/CN00/00299 and was filed on 30 September 2000 in the names of Qing Guo, Yonghong Yan and Baosheng Yuan for the invention entitled METOD AND SYSTEM TO SCALE DOWN A DECISION TREE-BASED HIDDEN MARKOV MODEL (HMM) FOR SPEECH RECOGNITION. The national stage application number is 10/019,381 and has a 35 U.S.C. 371(c)(1), (c)(2) and (c)(4) date of 17 April 2003.

28 JUN 2002

UNITED STATES PATENT AND TRADEMARK OFFICE

COMMISSIONER FOR PATENTS
UNITED STATES PATENT AND TRADEMARK OFFICE
WASHINGTON, D.C. 20231
www.uspto.gov

WENDEROTH, LIND & PONACK
2033 "K" Street, N.W., Suite 800
Washington, D.C. 20006-1021

In re Application of: SASAKI, Yasuharu, et al. U.S. Application No.: 10/019,394 PCT No.: PCT/JP01/02772 International Filing Date: 30 March 2001 Priority Date: 31 March 2000 Attorney's Docket No.: 2001-1841A For: CHLAMYDOSPORES AND PROCESS FOR PRODUCING THE SAME	DECISION ON PETITION TO REVIVE ABANDONED APPLICATION UNDER 37 CFR 1.137(b)

The petition to revive under 37 CFR 1.137(b) filed 28 December 2001 in the above-captioned application is hereby **GRANTED** as follows:

Applicants' statement that "the entire delay from November 30, 2001 to date was unintentional" meets the requirements of 37 CFR 1.137(b)(3).

Applicants have now submitted the basic national fee and the requirements of 37 CFR 1.137(b) have been satisfied. Therefore, the request to revive the application is granted as to the national stage in the United States of America.

This application is being returned to the National Stage Processing Division of the Office of PCT Operations for further processing in accordance with this decision, including the mailing of a Notification Of Missing Requirements requiring submission of an executed declaration in compliance with 37 CFR 1.497 and the surcharge for filing the declaration later than twenty months after the priority date.

Richard M. Ross
PCT Petitions Attorney
PCT Legal Office
Telephone: (703) 308-6155
Facsimile: (703) 308-6459

1 6 SEP 2002

UNITED STATES PATENT AND TRADEMARK OFFICE

COMMISSIONER FOR PATENTS
UNITED STATES PATENT AND TRADEMARK OFFICE
WASHINGTON, D.C. 20231
www.uspto.gov

MORGAN & FINNEGAN, LLP
345 Park Avenue
New York, NY 10154

In re Application of
DENTON, Richard Rex *et al*
U.S. Application No.: 10/019,415
PCT Application No.: PCT/US00/17540
Int. Filing Date: 26 June 2000
Priority Date: 25 June 1999
Attorney Docket No.: 2458-4042US4
For: METHODS FOR OBTAINING AND USING HAPLOTYPE DATA

DECISION ON PETITION TO CONVERT FROM 35 U.S.C. 371 TO 35 U.S.C. 111(a)

This decision is in response to applicants' petition filed via facsimile on 27 June 2002 requesting to convert the above-captioned national stage application to an application pursuant to 35 U.S.C. 111(a) which is hereby **DISMISSED**. The $130.00 petition fee has been charged to Deposit Account No. 13-4500 as authorized.

Applicants originally submitted this application as a national stage filing pursuant to 35 U.S.C. 371 of international application PCT/US00/17540 on 21 December 2001 which included a copy of the international application and a preliminary amendment. However, applicants filed five separate national stage applications of the aforementioned international application.

In a decision dated 14 June 2002, applicants were requested to file a petition pursuant to 37 CFR 1.182 to correct four of the applications to 35 U.S.C. 111(a) applications. However, the above-referenced application ("10/019,415") was designated as the national stage application for PCT/US00/17540.

Petitions to convert are to be granted only upon a showing by applicants of a substantial reason why a conversion is needed, *e.g.*, to avoid the loss of patent rights, where no other remedy is available to the applicant. Applicants have not made such a showing in this case.

In response to the Notification of Missing Requirements (Form PCT/DO/EO/905) mailed 19 March 2002, a declaration in compliance with 37 CFR 1.497(a) and (b) and a surcharge fee of $130.00 pursuant to 37 CFR 1.492(e) was submitted on 17 May 2002.

Applicants have completed the requirements for acceptance under 35 U.S.C. § 371(c). The application has an international filing date of 26 June 2000, under 35 U.S.C. 363, and a 35 U.S.C. 371 date of **17 May 2002**. This application is being forwarded to the National Stage Processing Division of the Office of PCT Operations for continued processing.

Leonard Smith
PCT Legal Examiner
PCT Legal Office

James Thomson
Attorney Advisor
PCT Legal Office

Tel.: (703) 308-6457

09/25/2002 SNAJARRO 00000006 134500 10019415

01 FC:122 130.00 CH

UNITED STATES PATENT AND TRADEMARK OFFICE

Commissioner for Patents
United States Patent and Trademark Office
P.O. Box 1450
Alexandria, VA 22313-1450
www.uspto.gov

MATT CATLETT
GENAISSANCE PHARMACEUTICALS
5 SCIENCE PARK
NEW HAVEN CT 06511

COPY MAILED

AUG 2 2 2005

OFFICE OF PETITIONS

In re Application of
Denton et al.
Application No. 10/019,415
Filed: July 12, 2005
Attorney Docket No. 2458-4042US4

DECISION
ON PETITION

This is a decision on the petition under 37 CFR 1.137(b), filed July 12, 2005, to revive the above-identified application.

The petition is **GRANTED**.

The application became abandoned for failure to submit the issue fee in a timely manner in reply to the Notice of Allowance and Fee(s) Due, mailed April 6, 2005, which set a statutory period for reply of three (3) months. Accordingly, the application became abandoned on July 7, 2005.

The petition satisfies the conditions for revival pursuant to the provisions of 37 CFR 1.137(b) in that (1) the reply in the form of the issue fee of $700; (2) the petition fee of $750; and (3) the required statement of unintentional delay have been received. Accordingly, the issue fee payment is accepted as having been unintentionally delayed.

Telephone inquiries concerning this decision should be directed to Denise Pothier at (571) 272-4787.

The application matter is being forwarded to Office of Patent Publication.

Frances Hicks
Petitions Examiner
Office of Petitions

UNITED STATES PATENT AND TRADEMARK OFFICE

Commissioner for Patents
United States Patent and Trademark Office
P.O. Box 1450
Alexandria, VA 22313-1450
www.uspto.gov

FASSE PATENT ATTORNEYS, P.A.
P.O. BOX 726
HAMPDEN ME 04444-0726

COPY MAILED

NOV 23 2004

OFFICE OF PETITIONS

In re Patent No. 6,736,911
Akinori Ro et al.
Issue Date: May 18, 2004
Application No. 10/019,416
Filed: December 21, 2001
Atty Docket No. 4296/PCT

: LETTER REGARDING
: PATENT TERM ADJUSTMENT
: AND
: NOTICE OF INTENT TO ISSUE
: CERTIFICATE OF CORRECTION

This letter is in response to the "REQUEST FOR REVIEW OF PTA DETERMINATION," filed August 31, 2004, notifying the Office of an error in patentees favor, in the determination of patent term adjustment.

The request is GRANTED.

The patent term adjustment indicated on the patent is to be corrected by issuance of a certificate of correction showing a revised Patent Term Adjustment of TWELVE (12) days.

Patentees are given **thirty (30) days** to respond to this decision. No extensions of time will be granted under § 1.136(a).

On May 18, 2004, the above-identified application matured into U.S. Patent No. 6,736,911. The patent issued with a Patent Term Adjustment of 24 days. Patentees submit that a supplemental declaration was submitted March 31, 2004, after the mailing of the Notice of Allowance, not April 12, 2004 as indicated in PAIR.

A review of the application history confirms that the patent term adjustment of 24 days indicated on the patent is in error. The application was entitled to a patent term adjustment of 61 days for Office delay in mailing a first notification under 35 U.S.C. 132 on April 23, 2003, fourteen months and 61 days after the filing date of the application, December 21, 2001, within the meaning of § 1.703(a)(1). Pursuant to § 1.704(c)(10), the PTA was reduced by 37 days for applicants' filing of a Supplemental Declaration after the mailing of the notice of allowance. Thus, as stated by patentee, the patent indicates an entitlement to a PTA of twenty-four (24) days.

However, the patent incorrectly shows a reduction of 37 days for applicants' filing a submission after the Notice of Allowance was mailed on January 13, 2004. The incorrect adjustment was calculated using the date of submission of the Supplemental Declaration as April 12, 2004, rather than March 31, 2004 which is a total of 49 days and not 37 days.

In view thereof, the patent term adjustment indicated on the patent should have been twelve **(12)** days.

As this letter was submitted as an advisement to the Office of an error in Patentee's favor, the Office will not assess the $200.00 application fee under 37 CFR 1.705(b). The Office thanks Patentees for their good faith and candor in bringing this to the attention of the Office.

The patent file is being forwarded to the Certificates of Correction Branch for issuance of a certificate of correction in order to rectify this error. See 35 U.S.C. § 254 and 37 CFR § 1.322. The Office will issue a certificate of correction indicating that the term of the above-identified patent is extended or adjusted by twelve (12) days.

Telephone inquiries specific to this matter should be directed to Petitions Attorney Patricia Faison-Ball at (571) 272-3212.

Kery A. Fries
per

Karin Ferriter
Senior Legal Advisor
Office of Patent Legal Administration
Office of Deputy Commissioner
for Patent Examination Policy

Enclosure: Copy of Draft Certificate of Correction
Copy of Adjusted PTA Calculation

UNITED STATES PATENT AND TRADEMARK OFFICE

Commissioner for Patents
United States Patent and Trademark Office
P.O. Box 1450
Alexandria, VA 22313-1450
www.uspto.gov

#14

SNELL & WILMER LLP
ONE ARIZONA CENTER
400 EAST VAN BUREN
PHOENIX, ARIZONA 85004-0001

COPY MAILED

MAR 2 5 2004

OFFICE OF PETITIONS

ON PETITION

In re Application of :
Tetsuo Yukimasa et al :
Application No. 10/019,417 :
Filed: December 21, 2001 :
Attorney Docket No. 29288.4700

This is a decision on the petition, filed March 24, 2004, under 37 CFR 1.313(c)(2) to withdraw the above-identified application from issue after payment of the issue fee.

The petition is **GRANTED**.

The above-identified application is withdrawn from issue for consideration of a submission under 37 CFR 1.114 (request for continued examination). See 37 CFR 1.313(c)(2).

Petitioner is advised that the issue fee paid on November 18, 2003 in the above-identified application cannot be refunded. If, however, the above-identified application is again allowed, petitioner may request that it be applied towards the issue fee required by the new Notice of Allowance.[1]

Telephone inquiries should be directed to Irvin Dingle at (703) 306-5684.

The file will be forwarded to Technology Center AU 2858 for processing of the request for continued examination under 37 CFR 1.114 and for consideration of the concurrently filed Information Disclosure Statement.

Irvin Dingle
Petitions Examiner
Office of Petitions
Office of the Deputy Commissioner
for Patent Examination Policy

---

[1] The request to apply the issue fee to the new Notice may be satisfied by completing and returning the new Issue Fee Transmittal Form PTOL-85(b), which includes the following language thereon: "Commissioner for Patents is requested to apply the Issue Fee and Publication Fee (if any) or re-apply any previously paid issue fee to the application identified above." Petitioner is advised that, whether a fee is indicated as being due or not, the Issue Fee Transmittal Form **must** be completed and timely submitted to avoid abandonment. Note the language in bold text on the first page of the Notice of Allowance and Fee(s) Due (PTOL-85).

09 DEC 200

#12

UNITED STATES PATENT AND TRADEMARK OFFICE

COMMISSIONER FOR PATENTS
UNITED STATES PATENT AND TRADEMARK OFFICE
P.O. BOX 1450
ALEXANDRIA, VA 22313-1450
www.uspto.gov

DARBY & DARBY P.C.
P.O. Box 5257
New York, NY 10150-5257

In re Application of
MIYAZAWA, Hiroshi
U.S. Application No.: 10/019,425
PCT No.: PCT/JP00/02339
Int. Filing Date: 10 April 2000
Priority Date: None
Attorney Docket No.: 09621/000L180-US0
For: TOOL HOLDER ATTACHMENT STRUCTURE

DECISION ON PETITION FOR REVIVAL UNDER 37 CFR 1.137(b)

Applicant's "Petition for Revival of an Application for Patent Abandoned Unintentionally Under 37 CFR 1.137(b)" filed on 28 October 2004 is hereby **GRANTED** as follows:

A declaration in compliance with 37 CFR 1.497(a) and (b) was filed with the subject petition. This is an appropriate reply. The petition fee of $685.00 has been paid. Applicant states that "[t]he entire delay in filing the required reply from the due date for the reply until the filing of a grantable petition under 37 CFR 1.137(b) was unintentional" as required. A terminal disclaimer is not required. Accordingly, all requirements under 37 CFR 1.137(b) have been satisfied.

Applicants have completed the requirements for acceptance under 35 U.S.C. 371(c). The application has an international filing date of 10 April 2000, under 35 U.S.C. 363 and a 35 U.S.C. 371(c)(1), (c)(2) and (c)(4) date of 28 October 2004.

This application is being forwarded to the National Stage Processing Division of the Office of PCT Operations for continued processing.

James Thomson

James Thomson
Attorney Advisor
Office of PCT Legal Administration

Tel.: (571) 272-3302

UNITED STATES PATENT AND TRADEMARK OFFICE

Commissioner for Patents
United States Patent and Trademark Office
P.O. Box 1450
Alexandria, VA 22313-1450
www.uspto.gov

05 JAN 2006

DARBY & DARBY P.C.
P.O. Box 5257
New York, NY 10150-5257

In re Application of	:	
MIYAZAWA, Hiroshi	:	
U.S. Application No.: 10/019,425	:	
PCT No.: PCT/JP00/02339	:	
Int. Filing Date: 10 April 2000	:	**DECISION**
Priority Date: None	:	
Attorney Docket No.: 09621/000L180-US0	:	
For: TOOL HOLDER ATTACHMENT	:	
STRUCTURE	:	

This decision is in response to applicant's "Request for Corrected Filing Receipt" filed via facsimile on 12 December 2005 which is treated as a petition under 37 CFR 1.181 and hereby **GRANTED** as follows:

A review of the filing receipt mailed 20 December 2004 indicates that the attorney docket number is incorrect. Due to a change of counsel, the docket number changed to 09621/000L180-US0. Moreover, the title of the application is "Tool Holder Attachment Structure," not "Tool Holder Mounting Structure."

Accordingly, the filing receipt mailed 20 December 2004 is hereby **VACATED**.

A new filing receipt will be mailed with this decision.

The application will then be forwarded to Technology Center 3723 for further processing.

James Thomson

James Thomson
Attorney Advisor
Office of PCT Legal Administration

Tel.: (571) 272-3302

UNITED STATES PATENT AND TRADEMARK OFFICE

UNITED STATES DEPARTMENT OF COMMERCE
United States Patent and Trademark Office
Address: COMMISSIONER FOR PATENTS
P.O. Box 1450
Alexandria, Virginia 22313-1450
www.uspto.gov

APPL NO.	FILING OR 371 (c) DATE	ART UNIT	FIL FEE REC'D	ATTY.DOCKET NO	DRAWINGS	TOT CLMS	IND CLMS
10/019,425	10/28/2004	3722	510	09621/000L180-US0	5	15	2

CONFIRMATION NO. 7709

CORRECTED FILING RECEIPT

OC000000017790633

07278
DARBY & DARBY P.C.
P. O. BOX 5257
NEW YORK, NY 10150-5257

Date Mailed: 01/05/2006

Receipt is acknowledged of this regular Patent Application. It will be considered in its order and you will be notified as to the results of the examination. Be sure to provide the U.S. APPLICATION NUMBER, FILING DATE, NAME OF APPLICANT, and TITLE OF INVENTION when inquiring about this application. Fees transmitted by check or draft are subject to collection. Please verify the accuracy of the data presented on this receipt. **If an error is noted on this Filing Receipt, please mail to the Commissioner for Patents P.O. Box 1450 Alexandria Va 22313-1450. Please provide a copy of this Filing Receipt with the changes noted thereon. If you received a "Notice to File Missing Parts" for this application, please submit any corrections to this Filing Receipt with your reply to the Notice. When the USPTO processes the reply to the Notice, the USPTO will generate another Filing Receipt incorporating the requested corrections (if appropriate).**

Applicant(s)

Hiroshi Miyazawa, Akasahi-shi, JAPAN;

Power of Attorney: The patent practitioners associated with Customer Number **07278**.

Domestic Priority data as claimed by applicant

This application is a 371 of PCT/JP00/02339 04/10/2000

Foreign Applications

If Required, Foreign Filing License Granted: 01/05/2006

The country code and number of your priority application, to be used for filing abroad under the Paris Convention, is US10/019,425

Projected Publication Date: None, application is not eligible for pre-grant publication

Non-Publication Request: No

Early Publication Request: No

**** SMALL ENTITY ****

Title

Tool Holder Attachment Structure

Preliminary Class

409

PROTECTING YOUR INVENTION OUTSIDE THE UNITED STATES

Since the rights granted by a U.S. patent extend only throughout the territory of the United States and have no effect in a foreign country, an inventor who wishes patent protection in another country must apply for a patent in a specific country or in regional patent offices. Applicants may wish to consider the filing of an international application under the Patent Cooperation Treaty (PCT). An international (PCT) application generally has the same effect as a regular national patent application in each PCT-member country. The PCT process **simplifies** the filing of patent applications on the same invention in member countries, but **does not result** in a grant of "an international patent" and does not eliminate the need of applicants to file additional documents and fees in countries where patent protection is desired.

Almost every country has its own patent law, and a person desiring a patent in a particular country must make an application for patent in that country in accordance with its particular laws. Since the laws of many countries differ in various respects from the patent law of the United States, applicants are advised to seek guidance from specific foreign countries to ensure that patent rights are not lost prematurely.

Applicants also are advised that in the case of inventions made in the United States, the Director of the USPTO must issue a license before applicants can apply for a patent in a foreign country. The filing of a U.S. patent application serves as a request for a foreign filing license. The application's filing receipt contains further information and guidance as to the status of applicant's license for foreign filing.

Applicants may wish to consult the USPTO booklet, "General Information Concerning Patents" (specifically, the section entitled "Treaties and Foreign Patents") for more information on timeframes and deadlines for filing foreign patent applications. The guide is available either by contacting the USPTO Contact Center at 800-786-9199, or it can be viewed on the USPTO website at http://www.uspto.gov/web/offices/pac/doc/general/index.html.

For information on preventing theft of your intellectual property (patents, trademarks and copyrights), you may wish to consult the U.S. Government website, http://www.stopfakes.gov. Part of a Department of Commerce initiative, this website includes self-help "toolkits" giving innovators guidance on how to protect intellectual property in specific countries such as China, Korea and Mexico. For questions regarding patent enforcement issues, applicants may call the U.S. Government hotline at 1-866-999-HALT (1-866-999-4158).

LICENSE FOR FOREIGN FILING UNDER
Title 35, United States Code, Section 184
Title 37, Code of Federal Regulations, 5.11 & 5.15

GRANTED

The applicant has been granted a license under 35 U.S.C. 184, if the phrase "IF REQUIRED, FOREIGN FILING LICENSE GRANTED" followed by a date appears on this form. Such licenses are issued in all applications where the conditions for issuance of a license have been met, regardless of whether or not a license may be required as set forth in 37 CFR 5.15. The scope and limitations of this license are set forth in 37 CFR 5.15(a) unless an earlier license has been issued under 37 CFR 5.15(b). The license is subject to revocation upon written notification. The date indicated is the effective date of the license, unless an earlier license of similar scope has been granted under 37 CFR 5.13 or 5.14.

This license is to be retained by the licensee and may be used at any time on or after the effective date thereof unless it is revoked. This license is automatically transferred to any related applications(s) filed under 37 CFR

1.53(d). This license is not retroactive.

The grant of a license does not in any way lessen the responsibility of a licensee for the security of the subject matter as imposed by any Government contract or the provisions of existing laws relating to espionage and the national security or the export of technical data. Licensees should apprise themselves of current regulations especially with respect to certain countries, of other agencies, particularly the Office of Defense Trade Controls, Department of State (with respect to Arms, Munitions and Implements of War (22 CFR 121-128)); the Bureau of Industry and Security, Department of Commerce (15 CFR parts 730-774); the Office of Foreign Assets Control, Department of Treasury (31 CFR Parts 500+) and the Department of Energy.

NOT GRANTED

No license under 35 U.S.C. 184 has been granted at this time, if the phrase "IF REQUIRED, FOREIGN FILING LICENSE GRANTED" DOES NOT appear on this form. Applicant may still petition for a license under 37 CFR 5.12, if a license is desired before the expiration of 6 months from the filing date of the application. If 6 months has lapsed from the filing date of this application and the licensee has not received any indication of a secrecy order under 35 U.S.C. 181, the licensee may foreign file the application pursuant to 37 CFR 5.15(b).

UNITED STATES PATENT AND TRADEMARK OFFICE

COMMISSIONER FOR PATENTS
UNITED STATES PATENT AND TRADEMARK OFFICE
P.O. BOX 1450
ALEXANDRIA, VA 22313-1450
www.uspto.gov

FINNEGAN, HENDERSON, FARABOW, GARRETT & DUNNER LLP
901 NEW YORK AVENUE, NW
WASHINGTON DC 20001-4413

COPY MAILED
MAR 28 2008
OFFICE OF PETITIONS

In re Application of	:
Tournier-Lasserve, et al.	: DECISION ON APPLICATION
Application No. 10/019,434	: FOR PATENT TERM ADJUSTMENT
Filed: May 7, 2002	:
Atty. Dkt. No.: 03715.0102	:

This is a decision on the "APPLICATION FOR PATENT TERM ADJUSTMENT--PRE-GRANT," filed October 2, 2007.

The application for patent term adjustment ("PTA") under 37 CFR 1.705(b) is hereby GRANTED TO THE EXTENT INDICATED HEREIN.

The correct determination of PTA at the time of the mailing of the Notice of Allowance is 411 days.

The Determination of Patent Term Adjustment under 35 U.S.C. 154(b), mailed July 2, 2007, indicated a patent term adjustment (PTA) to date of 233 days. The instant application for PTA was timely filed October 2, 2007.

Applicants do not contest the adjustment of 386 days under 37 CFR 1.702(a)(1) accorded for failure to mail at least one of a notification under 35 U.S.C. 132 or a notice of allowance under 35 U.S.C. 151 not later than fourteen months after the date on which the application was filed.

Applicants do not contest the reduction of 61 days under 37 CFR 1.704(b) accorded in connection with the response to election/restriction requirement, filed December 27, 2004.

Applicants do not contest the reduction of 92 days under 37 CFR 1.704(b) accorded in connection with the response after non-final Office action, filed January 24, 2007.

Applicants make reference to the requirement for information under 37 CFR 1.105 mailed March 7, 2005. Applicants are unsure whether the Office assessed an adjustment or reduction in connection with the requirement for information

A requirement for information under 37 CFR 1.105 is issued as a result of examination conducted pursuant to 35 U.S.C. 131. As such, a requirement for information is a notification under 35 U.S.C. 132. See, generally, MPEP 2731. Accordingly, issuance of a requirement for

information and an untimely filed response thereto impacts the calculation of adjustment.

In view thereof, a reduction of 56 days in accordance with 37 CFR 1.704(b) must be assessed in connection with the reply to the requirement for information filed August 2, 2005. The reduction began June 8, 2005, the day after the date that is three months after the date that the requirement for information was mailed, and ended August 2, 2005, the date a reply thereto was filed.

Further, the application is entitled to an adjustment of 234 days, as argued, in accordance with 37 CFR 1.702(a)(2) in connection with the mailing of the non-final Office action on July 24, 2006. The adjustment began December 3, 2005, the day after the date that is four months after the date that a reply to the requirement for information was filed, and ended July 24, 2006, the date that the non-final Office action was mailed.

In view thereof, at the time of allowance, the application is entitled to an overall adjustment of 411 days (adjustments totaling 620 days less reductions totaling 209 days).

Receipt is hereby acknowledged of the required PTA application fee of $200.00.

Applicants are further advised that the patent term adjustment indicated in the patent will include any additional patent term accrued pursuant to §§ 1.702(a)(4) and 1.702(b).

The application file is being forwarded to the Office of Patent Publication for issuance of a patent.

Telephone inquiries specific to this matter should be directed to Petitions Attorney Alesia M. Brown at (571) 272-3205.

Kery Fries
Senior Legal Advisor
Office of Patent Legal Administration
Office of Deputy Commissioner
for Patent Examination Policy

Enclosure: Adjusted PAIR Calculation

Day : Thursday
Date: 3/27/2008

PALM INTRANET

Time: 14:49:38

PTA Calculations for Application: 10/019434			
Application Filing Date:	05/07/2002	PTO Delay (PTO):	386
Issue Date of Patent:		Three Years:	0
Pre-Issue Petitions:	0	Applicant Delay (APPL):	153
Post-Issue Petitions:	0	Total PTA (days):	411
PTO Delay Adjustment:	178		

File Contents History

Number	Date	Contents Description	PTO	APPL	START
53	03/27/2008	ADJUSTMENT OF PTA CALCULATION BY PTO	178		
42	07/02/2007	MAIL NOTICE OF ALLOWANCE			
41	06/27/2007	ISSUE REVISION COMPLETED			
40	06/27/2007	NOTICE OF ALLOWANCE DATA VERIFICATION COMPLETED			
39	06/26/2007	ALLOWED CASE RETURNED TO THE EXAMINER FOR CLERICAL PROCESSING			
38	06/26/2007	DOCUMENT VERIFICATION			
37	06/27/2002	CORRECTED FILING RECEIPT			
36	06/26/2007	NOTICE OF ALLOWABILITY			
35	06/22/2007	DATE FORWARDED TO EXAMINER			
34	06/15/2007	AMENDMENT AFTER FINAL REJECTION			
33	04/17/2007	MAIL FINAL REJECTION (PTOL - 326)			
32	04/13/2007	FINAL REJECTION			
31	02/02/2007	DATE FORWARDED TO EXAMINER			
30	01/24/2007	RESPONSE AFTER NON-FINAL ACTION		92	28
29	01/24/2007	REQUEST FOR EXTENSION OF TIME - GRANTED			
28	07/24/2006	MAIL NON-FINAL REJECTION			
27	07/20/2006	NON-FINAL REJECTION			
25	04/08/2005	CORRESPONDENCE ADDRESS CHANGE			
24	03/07/2005	MAIL MISCELLANEOUS COMMUNICATION TO APPLICANT			
23	03/03/2005	MISCELLANEOUS ACTION WITH SSP			
22	01/10/2005	DATE FORWARDED TO EXAMINER			
21	12/27/2004	RESPONSE TO ELECTION / RESTRICTION FILED		61	17
20	12/27/2004	REQUEST FOR EXTENSION OF TIME - GRANTED			

19	12/27/2004	WORKFLOW INCOMING AMENDMENT IFW			
18	07/12/2004	MISCELLANEOUS INCOMING LETTER			
17	07/27/2004	MAIL RESTRICTION REQUIREMENT	386		-1
16	07/23/2004	REQUIREMENT FOR RESTRICTION / ELECTION			
15	10/27/2003	PRELIMINARY AMENDMENT			
14	09/11/2003	IFW TSS PROCESSING BY TECH CENTER COMPLETE			
13	07/05/2003	CASE DOCKETED TO EXAMINER IN GAU			
12	05/26/2003	CASE DOCKETED TO EXAMINER IN GAU			
10	10/23/2002	CASE DOCKETED TO EXAMINER IN GAU			
9	07/02/2002	APPLICATION DISPATCHED FROM OIPE			
8	06/20/2002	IFW SCAN & PACR AUTO SECURITY REVIEW			
7	06/06/2002	NOTICE OF DO/EO ACCEPTANCE MAILED			
6	05/07/2002	ADDITIONAL APPLICATION FILING FEES			
5	05/07/2002	INFORMATION DISCLOSURE STATEMENTS			
4	05/07/2002	A STATEMENT BY ONE OR MORE INVENTORS SATISFYING THE REQUIREMENT UNDER 35 USC 115, OATH OF THE APPLIC			

Search Another: Application# [ ] Search

EXPLANATION OF PTA CALCULATION

EXPLANATION OF PTE CALCULATION

To go back, right click here and select Back. To go forward, right click here and select Forward. To refresh, right click here and select Refresh.

Back to OASIS | Home page

Publish or Perish Software Press

*The **Date Calculator Applet** may take several minutes to load, depending on your connection speed.*

*Using a PDA? Click here for more information on **DOYDIFF**, a Date Calculator for both the Palm and the Pocket PC.*

*New for **Pocket PC 2003**: **DOYDIFF 2003**.*

amazon.com

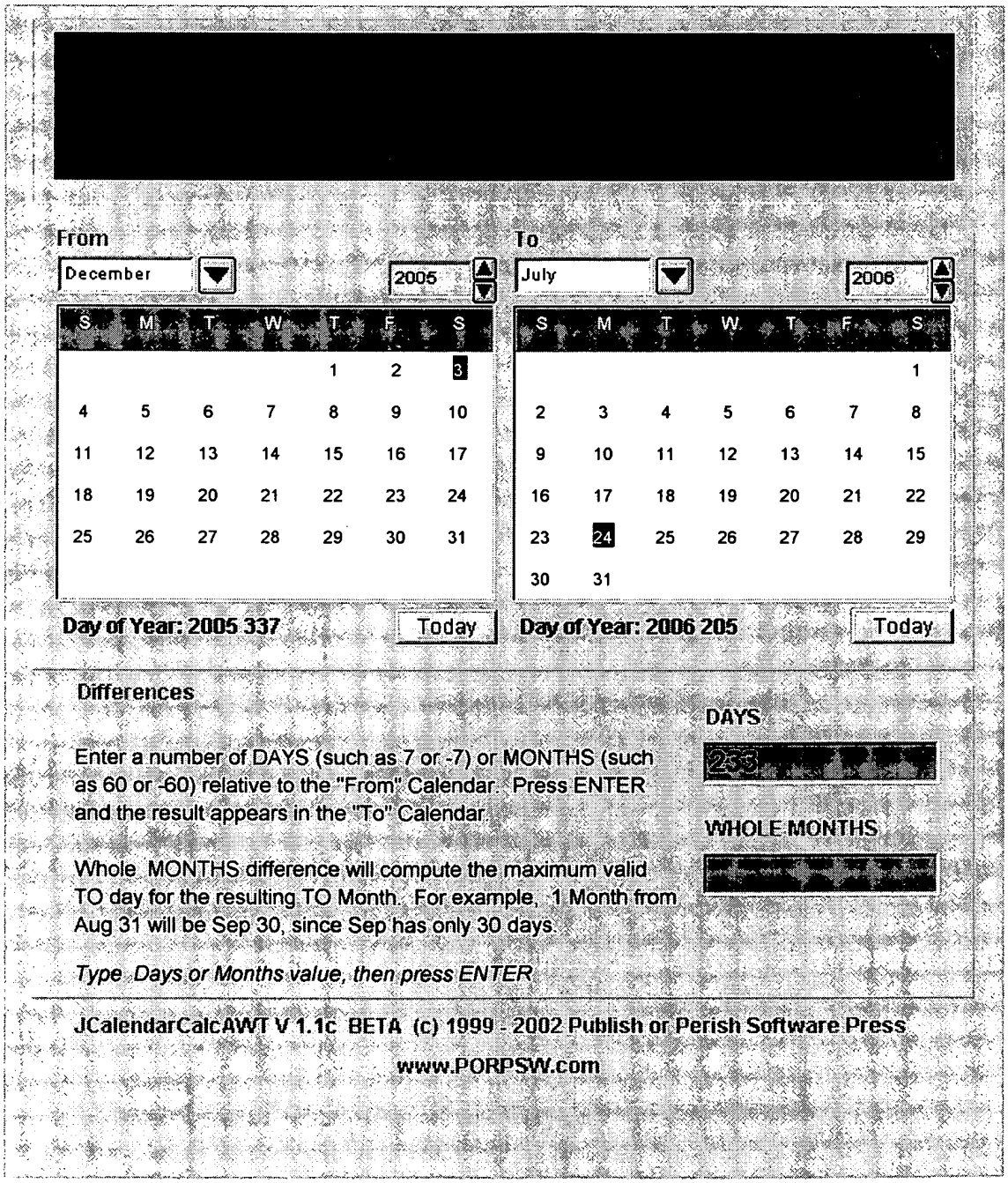

As time always moves forward, the Years, Months, Days breakdown is always computed from the lesser

Publish or Perish Software Press

*The **Date Calculator Applet** may take several minutes to load, depending on your connection speed.*

*Using a PDA? Click here for more information on **DOYDIFF**, a Date Calculator for both the Palm and the Pocket PC.*

*New for **Pocket PC 2003**: **DOYDIFF 2003**.*

amazon.com

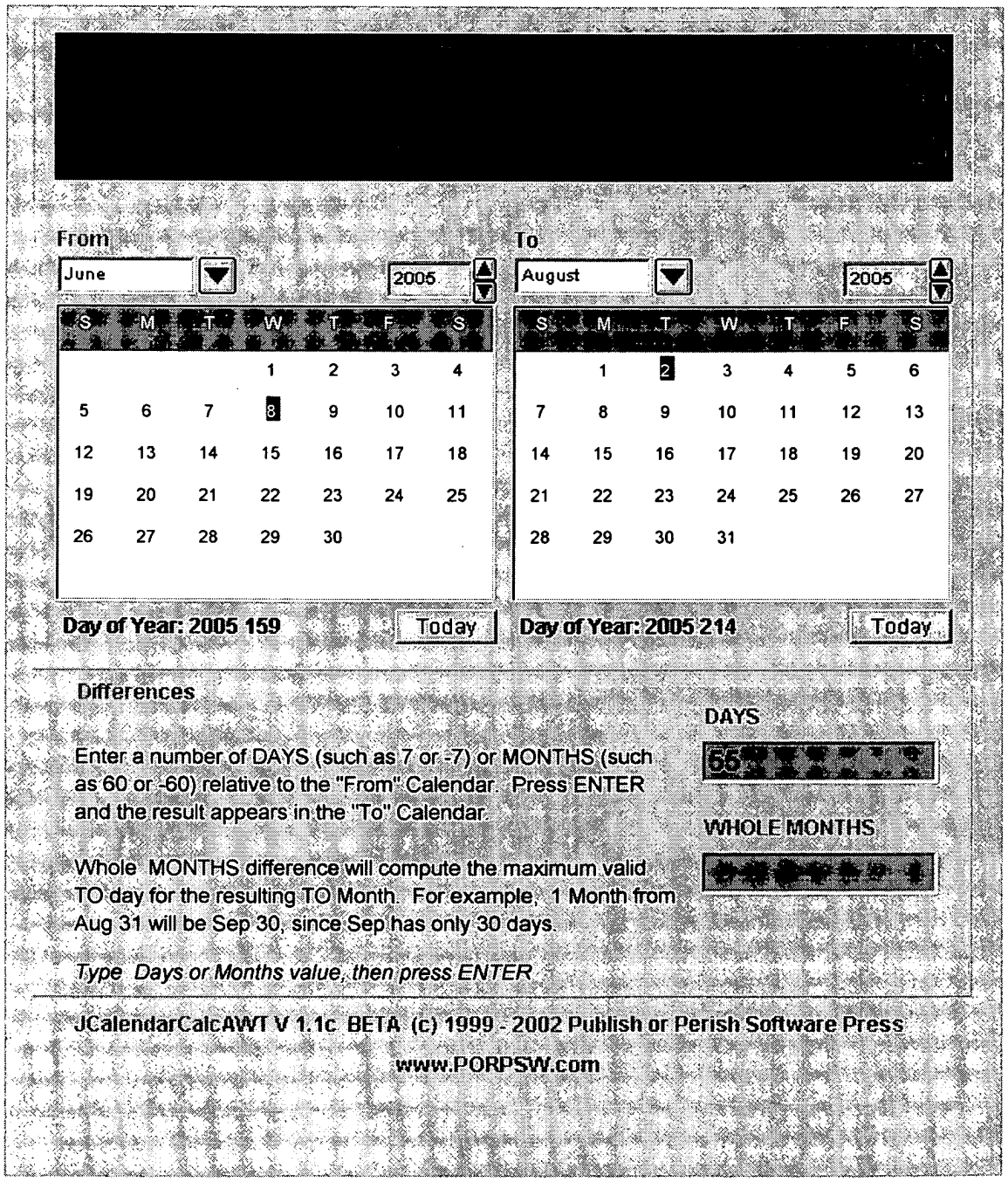

As time always moves forward, the Years, Months, Days breakdown is always computed from the lesser

UNITED STATES PATENT AND TRADEMARK OFFICE

COMMISSIONER FOR PATENTS
UNITED STATES PATENT AND TRADEMARK OFFICE
P.O. BOX 1450
ALEXANDRIA, VA 22313-1450
www.uspto.gov

MAILED

JUN 15 2010

OFFICE OF PETITIONS

FINNEGAN, HENDERSON, FARABOW, GARRETT & DUNNER LLP
901 NEW YORK AVENUE, NW
WASHINGTON DC 20001-4413

In re Patent No. 7,364,844	: DECISION ON APPLICATION FOR
Issued: April 29, 2008	: PATENT TERM ADJUSTMENT and
Application No. 10/019,434	: NOTICE OF INTENT TO ISSUE
Filed or 371(c) date: May 7, 2002	: CERTIFICATE OF CORRECTION
Dkt. No.: 03715.0102	:

This is a decision on the "CANDOR STATEMENT REGARDING PATENT TERM ADJUSTMENT," filed on June 25, 2008. This matter is being treated under 37 CFR 1.705(d) as a timely filed application for patent term adjustment. The fee required at 37 CFR 1.18(e) has been charged to the authorized deposit account.

This is also a decision on the "PETITION UNDER 37 C.F.R. § 1.183 FOR WAIVER OF THE REQUIREMENT OF UNDER 37 C.F.R. § 1.705(d)," filed October 24, 2008.

DECISION UNDER 37 CFR 1.183

The petition under 37 CFR 1.183 requests waiver of the two month time period for submission of a request for reconsideration of patent term adjustment pursuant to 37 CFR 1.705(d).

A petition pursuant to 37 CFR 1.705(d) is deemed to have been timely filed June 25, 2008 in view of the authorization to charge the required patent term adjustment application fee contained therein.

Accordingly, in this instance, waiver pursuant to 37 CFR 1.183 is unnecessary.

In view thereof, the petition under 37 CFR 1.183 is DISMISSED.

DECISION UNDER 37 CFR 1.705(d)

The application for patent term adjustment is GRANTED TO THE EXTENT INDICATED HEREIN.

In view of the request for reconsideration of the patent term adjustment filed June 25, 2008, the entire record has been carefully reviewed and the determinations that follow have been made.

The patent is entitled to an overall adjustment of 707 days pursuant to 37 CFR 1.702(a).

The patent is entitled to an adjustment of 386 days pursuant to 37 CFR 1.702(a) in connection with the restriction requirement mailed July 27, 2004.

The patent is entitled to an adjustment of 234 days pursuant to 37 CFR 1.702(a)(2) in connection with the non-final Office action mailed July 24, 2006.

The patent is entitled to an adjustment of 87 days pursuant to 37 CFR 1.702(a)(4) in connection with the issuance of the patent on April 29, 2008.

The patent is entitled to an overall adjustment of 1,213 pursuant to 37 CFR 1.702(b).

The calculation of delay pursuant to 37 CFR 1.702(b) is based on a national stage commencement date of January 2, 2002. As the expiration of the 30-month period pursuant to 35 U.S.C. 371(b) fell on a holiday, the period expired on the subsequent business day. See, PCT Rule 80.5. Accordingly, the commencement date is January 2, 2002. Thus, the period of over three year delay commenced January 3, 2005, the day after the date that is the day after the date that is three years after the commencement date, and ended April 29, 2008, the date that the patent issued.

The patent is not entitled to adjustment for days accrued under 37 CFR 1.702(a) that overlap with days that accrued under 37 CFR 1.702(b).

The overlapping days total 321 days (87 days from February 3, 2008 to April 29, 2008 and 234 days from December 3, 2005 to July 24, 2006).

As previously established, the period of applicant delay totals 209 days (61 days under 37 CFR 1.704(b) in connection with the reply filed December 27, 2004 + 56 days under 37 CFR 1.704(b) in connection with the reply filed August 2, 2005 + 92 days under 37 CFR 1.704(b) in connection with the reply filed January 24, 2007).

Accordingly, the patent is entitled to an overall adjustment of 1,390 days (707 days under 37 CFR 1.702(a) + 1,213 days under 37 CFR 1.702(b) - 209 days of applicant delay – 321 overlapping days).

The Office will *sua sponte* issue a certificate of correction. Pursuant to 37 CFR 1.322, the Office will not issue a certificate of correction without first providing assignee or patentee an opportunity to be heard. Accordingly, patentees are given **one (1) month or thirty (30) days,** whichever is longer, from the mail date of this decision to respond. No extensions of time will be granted under § 1.136.

The application is being forwarded to the Certificates of Branch for issuance of a certificate of correction. The Office will issue a certificate of correction indicating that the term of the above-identified patent is extended or adjusted by **1,390** days.

Telephone inquiries specific to this matter should be directed to the undersigned at (571) 272-3205.

/ALESIA M. BROWN/

Alesia M. Brown
Petitions Attorney
Office of Petitions

Enclosure: Copy of DRAFT Certificate of Correction

UNITED STATES PATENT AND TRADEMARK OFFICE

CERTIFICATE OF CORRECTION

PATENT : 7,364,844

DATED : **April 29, 2008** **DRAFT**

INVENTOR(S) : Tournier-Lasserve, et al.

It is certified that error appears in the above-identified patent and that said Letters Patent is hereby corrected as shown below:

On the cover page,

[*] Notice: Subject to any disclaimer, the term of this patent is extended or adjusted under 35 USC 154(b) by 1,113 days

Delete the phrase "by 1,113 days" and insert – by 1,390 days--

18 OCT 2002

UNITED STATES PATENT AND TRADEMARK OFFICE

COMMISSIONER FOR PATENTS
UNITED STATES PATENT AND TRADEMARK OFFICE
WASHINGTON, D.C. 20231
www.uspto.gov

Gary Lister
301 Hemlock Street
Cultus Lake, B.C. V2R 4Y7
Canada

In re Application of :
LISTER, Gary :
Application No.: 10/019,435 :
PCT No.: PCT/CA00/00971 :
Int. Filing Date: 28 August 2000 : **DECISION**
Priority Date Claimed: 03 April 2000 :
Attorney Docket No.: None :
For: GOLF PUTTING ALIGNMENT SYSTEM :

This decision is in response to applicant's "Petition for Revival of an International Application for Patent Designating the U.S. Abandoned Unavoidably Under 37 CFR 1.137(a)" filed 26 August 2002 which is **GRANTED** as follows.

A petition to revive an abandoned application on the grounds that the failure to timely reply was unavoidable pursuant to 37 CFR 1.137(a) must be accompanied by: (1) the required reply; (2) a showing to the satisfaction of the Commissioner that the entire delay in filing the required reply from the due date for the reply until the filing of a grantable petition pursuant to 37 CFR 1.137(a) was unavoidable; (3) any terminal disclaimer required pursuant to 37 CFR 1.137(c); and (4) the petition fee.

Applicant argues that the abandonment was unavoidable because "the fees were mailed Oct 30, 2001 well in advance of the due date as proven by Canada Post letter (attached) but was not opened until December 31, 2001 . . . I believe the delay in delivery was due to the anthrax scare, which would be adequate cause for establishing an unavoidable delay."

Applicant also provided documentary evidence in support of his claim including a document titled "Priority Courier Track and Trace System" indicating item ID "LE 002 677 559 CA" arrived at a "Foreign Off." on "2001/10/31." This was corroborated by a copy of a letter from Canada Post dated 20 June 2002 stating that the above-referenced documents were received by the USPS on 31 October 2001. The nature of the delay and the time period involved is sufficient to meet the unavoidable standard.

Applicant submitted the required $55.00 petition fee for a small entity. No terminal disclaimer is required. Accordingly, all requirements of 37 CFR 1.137(a) have been satisfied.

A $65.00 surcharge fee pursuant to 37 CFR 1.492(e) is still required.

The application has an international filing date of 28 August 2000 under 35 U.S.C. 363, and a 35 U.S.C. 371 date of **31 Dec mber 2001**.

Accordingly, this application is being forwarded to the United States Designated/Elected Office for further processing including mailing a Notification of Missing Requirements (Form PCT/DO/EO/905) indicating that a surcharge fee is required.

Leonard Smith
PCT Legal Examiner
PCT Legal Office

James Thomson
Attorney Advisor
PCT Legal Office

Tel.: (703) 308-6457

SPE RESPONSE FOR CERTIFICATE OF CORRECTION

Paper No.: _____

DATE : 3/19/06

TO SPE OF : ART UNIT 2675

SUBJECT : Request for Certificate of Correction for Appl. No.: 10019437 Patent No.: 6987706

Please respond to this request for a certificate of correction within 7 days.

Please review the requested changes/corrections as shown in the **COCIN** document(s) in the IFW application image. No new matter should be introduced, nor should the scope or meaning of the claims be changed.

Please complete the response (see below) and forward the completed response to scanning using document code **COCX**.

Monyna

Certificates of Correction Branch

703-308-9390 ext. 115

Thank You For Your Assistance

The request for issuing the above-identified correction(s) is hereby:

Note your decision on the appropriate box.

- [x] **Approved** — All changes apply.
- [ ] **Approved in Part** — Specify below which changes **do not** apply.
- [ ] **Denied** — State the reasons for denial below.

Comments: _____

SPE

2629

Art Unit

2/25/08

UNITED STATES PATENT AND TRADEMARK OFFICE

Commissioner for Patents
United States Patent and Trademark Office
P.O. Box 1450
Alexandria, VA 22313-1450
www.uspto.gov

OBLON, SPIVAK, MCCLELLAND, MAIER & NEUSTADT, P.C.
1940 DUKE STREET
ALEXANDRIA VA 22314

COPY MAILED

MAY 1 8 2007

OFFICE OF PETITIONS

In re Patent No. 7,022,485	:	
Application No. 10/019,439	:	
Filed: May 8, 2002	:	ON PETITION
Issued: April 4, 2006	:	
Attorney Docket No. 302948US58SD	:	

This is a decision on the petition filed March 15, 2007, which is being treated as a request under 37 CFR 3.81(b)[1] to correct the name of the assignee on the front page of the above-identified patent by way of a Certificate of Correction.

The request is **GRANTED**.

Petitioner submitted $400.00 towards payment of the petition fee. However, 37 CFR 3.81(b) only requires a $130.00 fee. Accordingly, $270.00 will be refunded to petitioner's credit card.

The patent file is being forwarded to the Certificates of Correction Branch for issuance of the requested Certificate of Correction.

Telephone inquiries concerning this decision may be directed to Petitions Examiner Liana Walsh at (571) 272-3206. Inquiries regarding the issuance of a certificate of correction should be directed to the Certificate of Correction Branch at (571) 272-4200.

Liana Walsh for
Frances Hicks
Petitions Examiner
Office of Petitions

[1] *See* MPEP 1309, subsection II; and Official Gazette of June 22, 2004.

SPE RESPONSE FOR CERTIFICATE OF CORRECTION

Paper No.: _____

DATE : 11/8/04

TO SPE OF : ART UNIT 1700

SUBJECT : Request for Certificate of Correction on Patent No.: 6716958 B1

A response is requested with respect to the accompanying request for a certificate of correction.

Please complete this form and return with file, within 7 days to:
Certificates of Correction Branch - PK 3-915
Palm location **7580** - Tel. No. 305-8309

With respect to the change(s) requested, correcting Office and/or Applicant's errors, should the patent read as shown in the certificate of correction? No new matter should be introduced, nor should the scope or meaning of the claims be changed.

Virginia Tolbert

Thank You For Your Assistance

Certificates of Correction Branch

The request for issuing the above-identified correction(s) is hereby:
Note your decision on the appropriate box.

- ☒ **Approved** — **All** changes apply.
- ☐ **Approved in Part** — Specify below which changes **do not** apply.
- ☐ **Denied** — State the reasons for denial below.

Comments:

_____

_____

_____

_____

_____

SPE — **Art Unit** 1711

PTOL-306 (REV. 7/03)

U.S. DEPARTMENT OF COMMERCE Patent and Trademark Office

MAY 17 2002

UNITED STATES PATENT AND TRADEMARK OFFICE

COMMISSIONER FOR PATENTS
UNITED STATES PATENT AND TRADEMARK OFFICE
WASHINGTON, D.C. 20231
www.uspto.gov

Lionel L. Lucchesi
Polster, Lieder, Woodruff & Lucchesi, L.C.
763 South New Ballas Road, Ste. 230
St. Louis, MO 63141

In re Application of CAUSEVIC, Elvir Application No.: 10/019,451 PCT Application No.: PCT/US00/11389 International Filing Date: 28 April 2000 Priority Date: 29 April 1999 Attorney Docket No.: KEDI 7230US For: HANDHELD AUDIOMETRIC DEVICE AND METHOD OF TESTING HEARING	DECISION ON PETITION UNDER 37 CFR 1.137(b)

Applicant's "Petition To Revive Unintentionally Abandoned Application," filed in the United States Patent and Trademark Office on 27 December 2001 is **GRANTED**.

BACKGROUND

On 28 April 2000, applicant filed an international application, PCT/US00/11389, which claimed a priority date of 29 April 1999. A demand for international preliminary examination was filed on 29 November 2000, prior to the expiration of nineteen months from the priority date. The thirty month period for entering the national stage in the United States expired at midnight on 29 October 2001.

On 27 December 2001, applicant filed a transmittal letter for entry into the national stage in the United States, which was accompanied by, *inter alia*, a petition to revive, payment of the petition fee and payment of the basic national fee.

DISCUSSION

A petition to revive an abandoned application under 37 CFR 1.137(b) must be filed without intentional delay from the time the application became abandoned and/or applicant first became aware of the abandoned status of the application. A petition under 37 CFR 1.137(b) must be accompanied by (1) a statement that the entire delay in filing the required reply from the due date for the reply until the filing of a grantable petition was unintentional, (2) a proposed response, (3) the petition fee required by law (37 CFR 1.17(m)), and (4) a terminal disclaimer and fee (if the international application was filed prior to June 8, 1995).

Applicant's statement that "the entire delay in entering the national stage in the United States ... was unintentional" is construed to mean that the entire delay in filing the required reply from the due date for the required reply until the filing of a grantable petition under 37 CFR

1.137(b) was unintentional, as required by 37 CFR 1.137(b)(3). If this is not a correct interpretation, applicant must notify the Office immediately The appropriate national fee and petition fee have been submitted. A terminal disclaimer is not required as application was filed on or after 08 June 1995. Accordingly, all requirements under 37 CFR 1.137(b) have been satisfied.

CONCLUSION

The petition to revive the application abandoned under 37 CFR 1.137(b) is **GRANTED** as to the National Stage in the United States of America.

This application is being forwarded to the National Stage Processing Division of the Office of the PCT Operations for continued processing, including preparation of a Notification of Missing Requirements (Form PCT/DO/EO/905) indicating that an oath or declaration and the surcharge for filing the oath or declaration after thirty months are required.

Richard Cole
PCT Legal Examiner
PCT Legal Administration

Erin M. Pender
Attorney Advisor
PCT Legal Administration

Telephone: 703-305-0455
Facsimile: 703-308-6459

UNITED STATES PATENT AND TRADEMARK OFFICE

Commissioner for Patents
United States Patent and Trademark Office
P.O. Box 1450
Alexandria, VA 22313-1450
www.uspto.gov

Drummond & Duckworth
Suite 500
4590 MacArthur Blvd.
Newport Beach CA 92660

COPY MAILED

APR 2 0 2006

OFFICE OF PETITIONS

ON PETITION

In re Application of :
Bernal, et al. :
Application No. 10/019,494 :
Filed: February 27, 2001 :
Attorney Docket No. 344-P-29-CIP-USA :
For: METHOD FOR DETECTING AND KILLING EPITHELIAL CANCER CELLS

This is a decision on the petition under 37 CFR 1.137(b), filed on February 2, 2006 to revive the above-identified application.

This application became abandoned for failure to timely respond to the final Office action mailed June 6, 2005, which set an extendable three month period for reply. Applicants filed a request for a three month extension of time and required fee, a RCE and required fee, and a change of address on December 2, 2005. As stated in the January 17, 2006 Notice of Improper Request for Continued Examination, the RCE was not accompanied by a submission and was therefore improper. Accordingly, this application became abandoned on December 7, 2005. The filing of the instant petition precedes the mailing of A Notice of Abandonment.

Applicants have submitted a RCE and required fee and amendment in reply to the June 6, 2005 final Office action, an acceptable statement of the unintentional nature of the delay in responding to the June 6, 2005 final Office action, and the petition fee.

The petition is **GRANTED**.

After the mailing of this decision the application will be forwarded to Technology Center GAU 1618 for further examination.

Telephone inquiries pertaining to this decision may be directed to the undersigned at (571) 272-3230.

E. Shirene Willis

E. Shirene Willis
Senior Petitions Attorney
Office of Petitions

SPE RESPONSE FOR CERTIFICATE OF CORRECTION

Paper No.: _____

DATE : 03/15/10

TO SPE OF : ART UNIT 1644

SUBJECT : Request for Certificate of Correction for Appl. No.: 10019501 Patent No.: 7655227

Please respond to this request for a certificate of correction within 7 days.

FOR IFW FILES:

Please review the requested changes/corrections as shown in the **COCIN** document(s) in the IFW application image. No new matter should be introduced, nor should the scope or meaning of the claims be changed.

Please complete the response (see below) and forward the completed response to scanning using document code **COCX**.

FOR PAPER FILES:

Please review the requested changes/corrections as shown in the attached certificate of correction. Please complete this form (see below) and forward it with the file to:

Certificates of Correction Branch (C of C)
Randolph Square 9D40-D
Palm Location 7580

You can fax the Directors/SPE response to 571-270-9990

Lamonte Newsome
Certificates of Correction Branch
703-756-1574

Thank You For Your Assistance

The request for issuing the above-identified correction(s) is hereby:
Note your decision on the appropriate box.

- ☐ **Approved** — **All** changes apply.
- ☐ **Approved in Part** — Specify below which changes **do not** apply.
- ☒ **Denied** — State the reasons for denial below.

Comments: Applicants failed to submit foreign document JAPAN 11/189322 as acknowledged in FOAM mailed 2/5/08.

RAM R. SHUKLA, PH.D.
SUPERVISORY PATENT EXAMINER
SPE 1644

UNITED STATES PATENT AND TRADEMARK OFFICE

Commissioner for Patents
United States Patent and Trademark Office
P.O. Box 1450
Alexandria, VA 22313-1450
www.uspto.gov

Date Mailed : 05/10/10

Patent No. : 7655227 B1
Patent Issued : 02/02/10
Docket No. : **312654US0 PCT**

Re: Request for Certificate of Correction

Consideration has been given your request for the issuance of a certificate of correction for the above-identified patent under the provisions of Rule(s) 1.322.

Respecting the alleged errors in the documents filed on 03/03/10; please see attachments. **"Therefore, no correction(s) is in order here under United States Codes (U.S.C.) 254 and the Code of Federal Regulation (C.F.R.) 1322."**

In view of the foregoing, your request in this matter is hereby denied.

Lamonte M. Newsome
For Mary Diggs, Supervisor
Decisions & Certificates
Of Correction Branch
(703) 305-8309 or (703) 756-1574

OBLON, SPIVAK, MCCLELLAND MAIER & NEUSTADT, L.L.P.
1940 DUKE STREET
ALEXANDRIA VA 22314

LMN

SPE RESPONSE FOR CERTIFICATE OF CORRECTION

Paper No.: _____

DATE : 03/15/10

TO SPE OF : ART UNIT 1644

SUBJECT : Request for Certificate of Correction for Appl. No.: 10019501 Patent No.: 7655227

Please respond to this request for a certificate of correction within 7 days.

FOR IFW FILES:

Please review the requested changes/corrections as shown in the **COCIN** document(s) in the IFW application image. No new matter should be introduced, nor should the scope or meaning of the claims be changed.

Please complete the response (see below) and forward the completed response to scanning using document code **COCX**.

FOR PAPER FILES:

Please review the requested changes/corrections as shown in the attached certificate of correction. Please complete this form (see below) and forward it with the file to:

Certificates of Correction Branch (C of C)
Randolph Square 9D40-D
Palm Location 7580

You can fax the Directors/SPE response to 571-270-9990

Lamonte Newsome
Certificates of Correction Branch
703-756-1574

Thank You For Your Assistance

The request for issuing the above-identified correction(s) is hereby:
Note your decision on the appropriate box.

- ☐ **Approved** — **All** changes apply.
- ☐ **Approved in Part** — Specify below which changes **do not** apply.
- ☒ **Denied** — State the reasons for denial below.

Comments: Applicants failed to submit foreign document JAPAN 11/189322 as acknowledged in FOAM mailed 2/5/08.

RAM R. SHUKLA, PH.D.
SUPERVISORY PATENT EXAMINER
SPE 1644

17 MAR 2003

UNITED STATES PATENT AND TRADEMARK OFFICE

COMMISSIONER FOR PATENTS
UNITED STATES PATENT AND TRADEMARK OFFICE
WASHINGTON, D.C. 20231
www.uspto.gov

Philip S. Johnson
JOHNSON & JOHNSON
One Johnson & Johnson Plaza
New Brunswick, NJ 08933-7003

In re Application of: BELLY, Robert T., et al.	DECISION REGARDING PETITION TO REVIVE UNDER 37 CFR 1.137(a)
U.S. Application No.: 10/019,514	
PCT No.: PCT/US00/11651	
International Filing Date: 01 May 2000	
Priority Date: 04 May 1999	
Attorney's Docket No.: CDS 219	
For: RAPID AND EFFICIENT CAPTURE OF DNA FROM SAMPLE WITHOUT USING CELL LYSING REAGENT	

This decision is issued in response to applicants' "Petition For Revival Of An Application Abandoned Unavoidably Under 37 CFR 1.137(a)" filed on 21 January 2003. Applicants have paid the required petition fee.

BACKGROUND

This national stage application became abandoned at midnight on 10 June 2002 based on applicants' failure to file a response to Notification Of Missing Requirements mailed 10 April 2002.

On 21 January 2003, applicants filed the "Petition For Revival Of An Application Abandoned Unavoidably Under 37 CFR 1.137(a)," with accompanying materials. The petition asserts that a docketing error occurred with respect to the Notification Of Missing Requirements, resulting in the lack of a timely response. Applicants argue that the abandonment was therefore "unavoidable" under 37 CFR 1.137(a).

DISCUSSION

Under 37 CFR 1.137(a), a petition requesting that the application be revived on the grounds of unavoidable delay must be filed promptly after applicant becomes aware of the abandonment, and such petition must be accompanied (1) by an adequate verified showing of the cause of unavoidable delay, (2) by a proper response, unless already filed, (3) by the petition fee required by law, and (4) by a terminal disclaimer (if necessary). Applicants have satisfied items (2) and (3) above, and item (4) is not applicable. However, as discussed below, applicants have failed to satisfy item (1).

One of the requirements for a grantable petition under 37 CFR 1.137(a) is an adequate showing that the entire delay in filing the required reply was unavoidable. Section 711.03(c)(2), of the Manual of Patent Examining Procedure ("MPEP") states the following:

> Decisions on reviving abandoned applications on the basis of 'unavoidable' delay have adopted the reasonably prudent person standard in determining if the delay was unavoidable:
>
> > The word 'unavoidable' ... is applicable to ordinary human affairs, and requires no more or greater care or diligence than is generally used and observed by prudent and careful men in relation to their most important business. ...

Here, applicants explain that, although the Notification Of Missing Requirements was timely received by counsel, a docketing error resulted in the failure to file a timely response. This is insufficient to satisfy the stringent standards applied to "unavoidable" abandonments.

Regarding item (2), the proper response required was submission of a declaration in compliance with 37 CFR 1.497, payment of the surcharge for delayed filing of the declaration, payment of additional fees based on the number of claims presented, and submission of sequence listing information. The present submission includes payment of the required surcharge and fees, and it was accompanied by a computer disc which applicants state contains the required sequence listing and an executed declaration. Accordingly, item (2) is satisfied.

The present petition included the required entity petition fee. Accordingly, item (3) is satisfied, and, as noted above, item (4) does not apply here.

Because applicant has failed to satisfy all the requirements for a grantable petition under 37 CFR 1.137(a), the petition cannot be granted at this time.

CONCLUSION

The petition to revive the application with respect to the United States under 37 CFR 1.137(a) is **DISMISSED** without prejudice. The application remains **ABANDONED** with respect to the United States.

If applicants seek reconsideration of the decision, a renewed petition must be submitted within **TWO (2) MONTHS** from the mail date of this decision.

It is suggested that, in the alternative to a renewed petition, applicants consider filing a petition to revive an unintentionally abandoned application under 37 CFR 1.137(b), as such a petition would be more appropriate under the factual situation described here.

Any further correspondence with respect to this matter should be directed to the Assistant Commissioner for Patents, Box PCT, Washington, DC 20231, with the contents of the letter marked to the attention of the PCT Legal Office.

Richard M. Ross
PCT Petitions Attorney
PCT Legal Office
Telephone: (703) 308-6155
Facsimile: (703) 308-6459

25 MAR 2004

UNITED STATES PATENT AND TRADEMARK OFFICE

COMMISSIONER FOR PATENTS
UNITED STATES PATENT AND TRADEMARK OFFICE
P.O. BOX 1450
ALEXANDRIA, VA 22313-1450
www.uspto.gov

Philip S. Johnson
JOHNSON & JOHNSON
One Johnson & Johnson Plaza
New Brunswick, NJ 08933-7003

In re Application of: BELLY, Robert T., et al.	:	
U.S. Application No.: 10/019,514	:	DECISION REGARDING
PCT No.: PCT/US00/11651	:	PETITION TO REVIVE UNDER
International Filing Date: 01 May 2000	:	37 CFR 1.137(b)
Priority Date: 04 May 1999	:	
Attorney's Docket No.: CDS 219	:	
For: RAPID AND EFFICIENT CAPTURE OF	:	
DNA FROM SAMPLE WITHOUT USING	:	
CELL LYSING REAGENT	:	

The petition to revive under 37 CFR 1.137(b) filed 21 May 2003 in the above-captioned application is hereby **GRANTED** as follows:

Applicants' "Statement" regarding the cause of the delay meets the requirements of 37 CFR 1.137(b)(3). As discussed in the decision mailed 17 March 2003, applicants' 21 January 2003 submission included the required reply, that is, the materials required by the Notification Of Missing Requirements.

The requirements of 37 CFR 1.137(b) have been satisfied (Deposit Account No. 10-0750 will be charged the $1,300 petition fee). Therefore, the request to revive the application is granted as to the national stage in the United States of America.

This application is being returned to the National Stage Processing Division of the Office of PCT Operations for further processing in accordance with this decision. The date under 35 U.S.C. 371 (c)(1), (c)(2), and (c)(4) is 21 January 2003.

Richard M. Ross
PCT Petitions Attorney
PCT Legal Office
Telephone: (703) 308-6155
Facsimile: (703) 308-6459

UNITED STATES PATENT AND TRADEMARK OFFICE

COMMISSIONER FOR PATENTS
UNITED STATES PATENT AND TRADEMARK OFFICE
P.O. BOX 1450
ALEXANDRIA, VA 22313-1450
www.uspto.gov

Konstantine J Diamond
4010 East 26th Street
Los Angeles, CA 90023

COPY MAILED

JAN 13 2006

OFFICE OF PETITIONS

In re Application of :
Koefelda, et al. : DECISION ON PETITION
Application No. 10/019,519 :
Filed: March 22, 2002 :
Atty. Dkt. No.: RPC0462PUSA :

This decision is in response to the "PETITION TO REVIVE ERRONEOUSLY ABANDONED APPLICATION," filed November 4, 2004. This matter is being treated under 37 CFR 1.181 as a petition to withdraw the holding of abandonment.

The petition under 37 CFR 1.181 is hereby **GRANTED**.

This application was held abandoned November 4, 2003, for failure to timely file a proper response to the Office communication mailed October 3, 2003. The Office communication set a one month shortened statutory period for reply. Notice of Abandonment was mailed September 29, 2004.

Petitioner argues that a response to the Office communication was timely submitted November 3, 2004 in accordance with the Certificate of Mailing procedures outlined at 37 CFR 1.8. Petitioner has included a copy of the response to the Office communication along with a return postcard dated November 7, 2003 by the UPSTO evidencing received of the response.

A review of the application file does not indicate receipt of the response purportedly submitted November 3, 2003, however, the response will be considered timely as it complies with the requirements of 37 CFR 1.8(b) in that (1) the Office was promptly informed of the previous timely mailing, (2) a copy of the previously submitted correspondence with certificate of facsimile thereon has been supplied, and (3) statements attesting to the previous timely mailing have been submitted.

In view of the above, the Notice of Abandonment is hereby VACATED and the Notice of Abandonment is WITHDRAWN.

This application is being forwarded to Technology Center 3700 for further processing.

Telephone inquiries regarding this decision should be directed to the undersigned at (703) 305-0310.

Alesia M. Brown
Petitions Attorney
Office of Petitions

UNITED STATES PATENT AND TRADEMARK OFFICE

Commissioner for Patents
United States Patent and Trademark Office
P.O. Box 1450
Alexandria, VA 22313-1450
www.uspto.gov

MUETING RAASCH & GEBHARDT, P.A.
P.O. BOX 581415
MINNEAPOLIS, MN 55458-1415

COPY MAILED

NOV 2 6 2004

OFFICE OF PETITIONS

In re Application of :
Peter J. Schiller :
Application No. 10/019,521 :
Filed: June 6, 2002 :
Attorney Docket No. 110.01100101

NOTICE

This is in response to the paper filed November 5, 2004, which is being treated as a petition under 37 CFR 1.27(c) seeking status as a small entity.

The Verified Statement Claiming Small Entity Status of November 5, 2004 has been made of record and small entity status has been accorded.

Inquiries related to this communication should be directed to Irvin Dingle at (571) 272-3210.

Irvin Dingle
Petitions Examiner
Office of Petitions
Office of the Deputy Commissioner
for Patent Examination Policy

UNITED STATES PATENT AND TRADEMARK OFFICE

COMMISSIONER FOR PATENTS
UNITED STATES PATENT AND TRADEMARK OFFICE
P.O. BOX 1450
ALEXANDRIA, VA 22313-1450
www.uspto.gov

JUL 30 2004

Paper No. 8

In re Application of
Alessandro Bianchini *et al*
Application No. 10/019,536
Filed: May 14, 2002
Attorney Docket No. 7223.3027.001

DECISION ON PETITION

This is a decision on the petition filed on June 28, 2004 by which petitioners request withdrawal of the examiner's holding that this application stands abandoned for failure to file a timely and proper reply to the Office letter dated September 17, 2003. The petition is considered pursuant to 37 CFR 1.181, and no fee is required.

The petition is granted.

Petitioners allege that the application is not abandoned because a reply to the Office letter in question was actually filed on December 9, 2003. Petitioners have supported this allegation by furnishing a copy of the reply and a copy of a post card filing receipt for the reply that shows that the reply was in fact received in the Office on December 4, 2003; the December 9, 2003 date appears to be the date upon which the post card receipt was received in the mail by petitioners. As December 4, 2003 is a date within the period set for filing a reply to the Office letter in question, it is clear that this application is not abandoned.

Accordingly, the Notice of Abandonment is hereby vacated, the holding of abandonment is withdrawn, and the application is restored to pending status. The application is being forwarded to the Head Supervisory Applications Examiner for entry of the reply filed on December 4, 2003.

PETITION GRANTED.

E. Rollins-Cross, Director
Technology Center 3700

Reising Ethington Barnes Kisselle
Learman & McCull
P.O. Box 4390
Troy, MI 48099-4390

UNITED STATES PATENT AND TRADEMARK OFFICE

UNITED STATES DEPARTMENT OF COMMERCE
United States Patent and Trademark Office
Address: COMMISSIONER FOR PATENTS
P.O. Box 1450
Alexandria, Virginia 22313-1450
www.uspto.gov

Dennemeyer & Company
6990 Columbia Gateway Circle
Suite 360
Columbia, MD 21046

Mail Date: 04/21/2010

Applicant	: Peter Steffen Ebert	: DECISION ON REQUEST FOR
Patent Number	: 7571129	: RECALCULATION of PATENT
Issue Date	: 08/04/2009	: TERM ADJUSTMENT IN VIEW
Appliction No	: 10/019,544	: OF WYETH AND NOTICE OF INTENT TO
Filed	: 05/09/2002	: ISSUE CERTIFICATE OF CORRECTION
		:

The Request for Recalculation is **GRANTED** to the extent indicated.

The patent term adjustment has been determined to be **1598** days. The USPTO will *sua sponte* issue a certificate of correction reflecting the amount of PTA days determined by the recalculation.

Prior to the issuance of the certificate of correction, the USPTO will afford patentee an opportunity to be heard and request reconsideration. Accordingly, patentee has **one month or thirty (30) days**, whichever is longer, to file a request for reconsideration of this patent term adjustment calculation. See 35 U.S.C. 154(b)(3)(B)(ii) and 37 CFR 1.322(a)(4). No extensions of time will be granted under 37 CFR 1.136.

Patentee should use document code PET.OP if electronically filing a request for reconsideration of this patent term adjustment calculation. The patentee must also include the information required by 37 CFR 1.705(b)(2) and the fee required by 37 CFR 1.18(e). If patentee does not file a timely request for reconsideration of this patent term adjustment calculation including the information required by 37 CFR 1.705(b)(2) and the fee required by 37 CFR 1.18(e), the USPTO will issue a certificate of correction reflecting the PTA determination noted above.

Patentee should be aware that in order to preserve the right to review in the United States District Court for the District of Columbia of the USPTO patent term adjustment determination, patentee must ensure that he or she also take the steps required under 35 U.S.C. 154(b)(4)(A) in a timely manner. Nothing in the request for recalculation should be construed as providing an alternative time frame for commencing a civil action under 35 U.S.C. 154(b)(4)(A).

Any questions concerning this decision should be directed to the Office of Patent Legal Administration at 571-272-7702.

24 JUL 2002

UNITED STATES PATENT AND TRADEMARK OFFICE

COMMISSIONER FOR PATENTS
UNITED STATES PATENT AND TRADEMARK OFFICE
WASHINGTON, D.C. 20231
www.uspto.gov

Stacy L. Taylor
Foley & Lardner
PO Box 80278
San Diego, CA 92138-0278

In re Application of LEE, Jin Po Application No.: 10/019,570 PCT Application No.: PCT/US98/15369 International Filing Date: 22 July 1998 Priority Date: NONE Attorney Docket No.: 086748-2017 For: MULTIPLE ANALYTE ASSAY	DECISION ON PETITION UNDER 37 CFR 1.137(b)

Applicant's "Petition For Revival of an International Application For Patent Designating the U.S. Abandoned Unintentionally Under 37 CFR 1.137(b)," filed in the United States Patent and Trademark Office on 08 November 2001 is **GRANTED**.

BACKGROUND

On 22 July 1998, applicant filed international application number PCT/US98/15369. The deadline for entry into the United States National Stage was twenty months from the priority date, that is 22 February 2000.

On 08 November 2001, applicant filed a transmittal letter for entry into the national stage in the United States, accompanied by, *inter alia*, a petition to revive and the basic national fee.

DISCUSSION

A petition to revive an abandoned application under 37 CFR 1.137(b) must be filed without intentional delay from the time the application became abandoned and/or applicant first became aware of the abandoned status of the application. A petition under 37 CFR 1.137(b) must be accompanied by (1) a statement that the entire delay in filing the required reply from the due date for the reply until the filing of a grantable petition was unintentional, (2) a proposed response, (3) the petition fee required by law (37 CFR 1.17(m)), and (4) a terminal disclaimer and fee (if the international application was filed prior to June 8, 1995).

Applicant's statement that "the entire delay in filing the required reply from the due date for the required reply until the filing of a grantable petition under 37 CFR 1.137(b) was unintentional," satisfies the requirements of 37 CFR 1.137(b)(3). Applicant has paid both the petition fee and the basic national fee. A terminal disclaimer is not required as application was filed on after 08 June 1995. Accordingly, all requirements under 37 CFR 1.137(b) have been satisfied.

The fee for furnishing the oath or declaration later than twenty months from the priority date will be charged to deposit account no. 50-0872, as authorized by the transmittal letter.

CONCLUSION

The petition to revive the application abandoned under 37 CFR 1.137(b) is **GRANTED** as to the National Stage in the United States of America.

The application has an international filing date of 22 July 1998 under 35 U.S.C. §363 and a date of 08 November 2001 under 35 U.S.C. §371. This application is being forwarded to the National Stage Processing Division of the Office of the PCT Operations for continued processing.

Richard Cole
PCT Legal Examiner
PCT Legal Administration

Erin M. Pender
Attorney Advisor
PCT Legal Administration

Telephone: (703) 305-0455
Facsimile: (703) 308-6459

MAR 1 3 2002

UNITED STATES PATENT AND TRADEMARK OFFICE

Commissioner for Patents
United States Patent and Trademark Office
Washington, D.C. 20231
www.uspto.gov

Bayer Corporation
Patent Department
100 Bayer Road
Pittsburgh, PA 15205-9741

In re Application of SCHMALSTIEG et al :
U.S. Application No.: 10/019,578 :
Int. Application No.: PCT/EP00/05392 : DECISION
Int. Filing Date: 13 June 2000
Priority Date: 25 June 1999
Attorney Docket No.: Mo6862/LeA 33,590
For: CONDENSATION CROSS-LINKING POLYURETHANE MATERIALS CONTAINING SPECIAL AMINOSILANES, A METHOD FOR THE PRODUCTION THEREOF AND THEIR USE

This is in response to the communication filed 21 December 2001, which is being treated as a request for status under 37 CFR 1.42.

BACKGROUND

On 13 June 2000, applicant filed international application PCT/EP00/05392, which claimed priority of an earlier Germany application filed 25 June 1999. A copy of the international application was communicated to the USPTO from the International Bureau on 04 January 2001. A Demand for international preliminary examination, in which the United States was elected, was filed on 18 December 2000, prior to the expiration of nineteen months from the priority date. Accordingly, the thirty-month period for paying the basic national fee in the United States expired at midnight on 26 December 2001 (25 December 2001 was a holiday).

On 21 December 2001, applicant filed national stage papers in the United States Designated/Elected Office (DO/EO/US). The submission was accompanied by, *inter alia*, the basic national fee required by 35 U.S.C. 371(c)(1) and an executed declaration.

DISCUSSION

37 CFR 1.42 provides, "In case of the death of the inventor, the legal representative (executor, administrator, etc.) of the deceased inventor may make the necessary oath or declaration, and apply for and obtain the patent."

In the present case, the declaration filed 21 December 2001 is signed by the heir of Ulrich Walter, who according to the declaration is deceased. The declaration is accompanied by certified document which states that Marie-Hélène Marie-Ange Christiane Walter is the sole heir of Ulrich Walter.

The submission of the declaration executed by the sole heir of the deceased inventor is hereby construed as an indication that no legal representative of the deceased's estate has been appointed and that no legal representative is required by the applicable law to be appointed, and thus the sole heir is signing as the legal representative of the estate. If this interpretation is incorrect, applicant is required to promptly notify the Office of such and to submit a declaration properly executed by the legal representative of the deceased inventor in response to this decision.

CONCLUSION

For the reasons above, the papers filed 21 December 2001 are ACCEPTED under 37 CFR 1.42.

The application has an International Filing Date of 13 June 2000 and a date under 35 U.S.C. 371 of 21 December 2001.

This application is being forwarded to the United States Designated/Elected Office (DO/EO/US) for further processing in accordance with this decision.

Bryan Tung
PCT Legal Examiner
PCT Legal Office

Telephone: 703-308-6614
Facsimile: 703-308-6459

UNITED STATES PATENT AND TRADEMARK OFFICE

Commissioner for Patents
United States Patent and Trademark Office
P.O. Box 1450
Alexandria, VA 22313-1450
www.uspto.gov

DANIEL B. SCHEIN, PH.D.,ESQ.
BRINKS HOFER GILSON & LIONE
P.O. BOX 28403
SAN JOSE CA 95159

COPY MAILED

DEC 15 2004

OFFICE OF PETITIONS

In re Application of	:	
Raman et al.	:	
Application No. 10/019,634	:	DECISION DISMISSING
Filed: December 27, 2001	:	PETITION
Attorney Docket No. 60556-303620	:	

This is a decision on the petition under 37 CFR 1.137(a), filed September 13, 2004, to revive the above-identified application.

This application became abandoned for failure to reply timely to the final Office action mailed February 20, 2004, which set a three-month shortened statutory period to respond. Applicants did not timely and properly obtain any extensions of time to respond under 37 CFR 1.136(a). Accordingly, this application became abandoned on May 21, 2004. The present petition precedes the mailing of a Notice of Abandonment.

In the present petition, Daniel B. Schein, attorney for applicants, asserts that delay in filing the response was unavoidable because his illness and hospitalization prevented him from completing the preparation and filing of the reply until after the due date. Specifically, Dr. Schein explains that he began to suffer flu-like symptoms on August 16, 2004, and did limited work on August 17, 18, and 19, 2004. However, on August 19, 2004, his illness worsened and he sought treatment at O'Connor Hospital in San Jose, California. Dr. Schein was discharged from the hospital on August 21, 2004. A copy of the Nursing Discharge Summary Instructions are enclosed with the petition. Dr. Schein contends that his hospitalization rendered him incapable of filing a timely reply to the final Office action mailed February 20, 2004.

On petition, applicants also submitted, *inter alia*, payment of the requisite fees, a request for a three-month extension to

respond, and a reply to the Office action in the form of an RCE and an amendment.

DISCUSSION

A grantable petition under 37 CFR 1.137(a) must be accompanied by: (1) the required reply, unless previously filed; (2) the petition fee as set forth in 37 CFR 1.17(l); (3) a showing to the satisfaction of the Commissioner that the entire delay in filing the required reply from the due date for the reply until the filing of a grantable petition pursuant to 37 CFR 1.137(a) was unavoidable; and (4) any terminal disclaimer (and fee as set forth in 37 CFR 1.20(d)) required pursuant to 37 CFR 1.137(c). The present petition lacks item (3).

The showing of record before the Office is inadequate to establish unavoidable delay within the meaning of 37 CFR 1.137(a)(3).

Decisions on reviving abandoned applications on the basis of "unavoidable" delay have adopted the reasonably prudent person standard in determining if the delay was unavoidable (The word 'unavoidable' ... is applicable to ordinary human affairs, and requires no more or greater care or diligence than is generally used and observed by prudent and careful men in relation to their most important business.) In re Mattullath, 38 App. D.C. 497, 514-15 (1912)(*quoting* Ex parte Pratt, 1887 Dec. Comm'r Pat. 31, 32-33 (1887)); see also Winkler v. Ladd, 221 F. Supp. 550, 552, 138 U.S.P.Q. 666, 167-68 (D.D.C. 1963), aff'd, 143 U.S.P.Q. 172 (D.C. Cir. 1963); Ex parte Henrich, 1913 Dec. Comm'r Pat. 139, 141 (1913). Decisions on revival are made on a "case-by-case basis, taking all the facts and circumstances into account." Smith, 671 F.2d at 538, 213 U.S.P.Q. at 982. Nonetheless, a petition cannot be granted where a petitioner has failed to meet his or her burden of establishing that the delay was "unavoidable." Haines, 673 F. Supp. at 316-17, 5 U.S.P.Q.2d at 1131-32.

Applicants must show to the satisfaction of the Commissioner that the entire delay in filing the required reply **from the due date for the reply until the filing of a grantable petition pursuant to 37 CFR 1.137(a) was unavoidable.** Applicants did not obtain any proper and timely extensions of time to respond. Accordingly, the due date for the reply was on May 20, 2004. Dr. Schein asserts incapacitation due to his illness and hospitalization from August 19, 2004 to August 21, 2004. However, Dr. Schein has failed to show why he was unavoidably

delayed from filing the reply from the due date of May 20, 2004, to the time of his illness.

Additionally, Dr. Schein has failed to show what steps were taken during his hospitalization to seek the assistance of another member of the law firm to timely file the reply with a request for a three-month extension of time to respond in his absence.

Applicants have not provided a sufficient showing to the satisfaction of the Commissioner that the entire delay in filing the required reply from the due date for the reply (May 20, 2004) until the filing of a grantable petition pursuant to 37 CFR 1.137(a) was unavoidable.

The Office notes that an applicant may delay action until the end of the time period for reply. However, in doing so, the applicant must assume the risk attendant to such delay. See Ex parte Warren, 1901 Dec. Comm'r Pat. 137 (Comm'r Pat. 1901).

CONCLUSION

The showing required under 37 CFR 1.137(a) is exacting, and applicants have not met that showing.

Accordingly, the petition must be **DISMISSED**.

Any request for reconsideration of this decision must be submitted within **TWO (2) MONTHS** from the mail date of this decision. The reconsideration request should include a cover letter entitled "Renewed Petition under 37 CFR 1.137(a)" or "Petition under 37 CFR 1.137(b)," as appropriate. Extensions of time are permitted under 37 CFR 1.136(a).

Alternative *Venue*

While the showing of record is not sufficient to establish to the satisfaction of the Commissioner that the delay was unavoidable, applicants are not precluded from seeking relief by filing a petition under 37 CFR 1.137(b) on the basis of unintentional delay. A grantable petition under 37 CFR 1.137(b) must be accompanied by: (1) the reply required to the outstanding Office action or notice, unless previously filed; (2) the petition fee as set forth in 1.17(m); (3) a statement that the entire delay in filing the required reply from the due date for the reply until the filing of a grantable petition pursuant to this paragraph was unintentional; and (4) any terminal disclaimer (and fee as set forth in 1.20(d)) required pursuant to 37 CFR 1.137(d).

Further correspondence with respect to this matter should be addressed as follows:

By mail: Mail Stop Petition
Commissioner for Patents
P.O. Box 1450
Alexandria, VA 22313-1450

By FAX: (703) 872-9306
Attn: Office of Petitions

By hand: U.S. Patent and Trademark Office
220 20th Street S.
Customer Window, Mail Stop Petition
Crystal Plaza Two, Lobby, Room 1B03
Arlington, VA 22202

Pursuant to 37 CFR 1.136, an extension of time must be filed prior to the expiration of the maximum period obtainable for reply to avoid abandonment. Accordingly, applicants may request a refund of the $950.00 extension of time fee submitted on September 13, 2004, because it was submitted subsequent to the maximum period obtainable for reply. Applicants may request a refund of the $950.00 fee by writing to the following address:

Mail Stop 16
Director of the US Patent and Trademark Office
PO Box 1450
Alexandria, VA 22313-1450

A copy of this decision should accompany applicants' request.

Telephone inquiries related to this decision should be directed to the undersigned at (571) 272-3211.

Christina Tartera Donnell

Christina Tartera Donnell
Petitions Attorney
Office of Petitions

UNITED STATES PATENT AND TRADEMARK OFFICE

Commissioner for Patents
United States Patent and Trademark Office
P.O. Box 1450
Alexandria, VA 22313-1450
www.uspto.gov

Daniel B. Schein, Ph.D, Esq.
Brinks Hofer Gilson & Lione
P.O. Box 28403
San Jose, CA 95159

COPY MAILED

FEB 01 2005

OFFICE OF PETITIONS

In re Application of :
Raman et al. :
Application No. 10/019,634 : DECISION ON PETITION
Filed: December 27, 2001 :
Attorney Docket No. 60556-303620 :

This is a decision on the petition under 37 CFR 1.137(b), filed January 10, 2005, to revive the above-identified application.

The petition is **GRANTED**.

This application became abandoned for failure to reply timely to the final Office action mailed February 20, 2004, which set a three-month shortened statutory period to respond. Petitioner did not timely and properly obtain any extensions of time to respond under 37 CFR 1.136(a). Accordingly, this application became abandoned on May 21, 2004. A Notice of Abandonment was mailed on January 6, 2005.

Petitioner has met the requirements to revive the above-identified application pursuant to 37 CFR 1.137(b). Petitioner submitted the required reply in the form of a request for continued examination with a submission, paid the petition fee, and made the proper statement of unintentional delay.

The Office finance records indicate that on September 13, 2004, petitioner paid extension of time fees totaling $1,060.00. Pursuant to 37 CFR 1.136, an extension of time must be filed prior to the expiration of the maximum period obtainable for reply to avoid abandonment. Accordingly, petitioner may request a refund of the $1,060.00 extension of time fee submitted on September 13, 2004, because it was submitted subsequent to the maximum period obtainable for reply. Petitioner may request a refund of the $1,060.00 fee by writing to the following address:

Mail Stop 16
Director of the US Patent and Trademark Office
PO Box 1450
Alexandria, VA 22313-1450

A copy of this decision should accompany petitioner's request for a refund.

This matter is being referred to Technology Center Art Unit 1616.

Telephone inquiries concerning this matter may be directed to the undersigned at (571) 272-3211.

Christina Tartera Donnell

Christina Tartera Donnell
Senior Petitions Attorney
Office of Petitions

UNITED STATES PATENT AND TRADEMARK OFFICE

Commissioner for Patents
United States Patent and Trademark Office
P.O. Box 1450
Alexandria, VA 22313-1450
www.uspto.gov

MICHAEL S. GZYBOWSKI
BUTZEL LONG
350 SOUTH MAIN STREET, SUITE 300
ANN ARBOR, MI 48104

COPY MAILED

SEP 16 2005

OFFICE OF PETITIONS

In re Application of
Kudo et al.
Patent No. 6,759,469
Application No. 10/019,636
Filed: December 28, 2001
Issued: July 6, 2004
Attorney Docket No. 121036-0012

ON PETITION

This is a decision on the Request for Certificate of Correction filed February 14, 2005, which will be treated as a request under 37 CFR 3.81 to accept the correction of the assignee data.

The request under 37 CFR 3.81 is **GRANTED**.

Effective June 25, 2004, the practice relating to issuance of a patent to an assignee was modified by requiring that, after payment of an issue fee, a request for a certificate of correction must be filed in order to obtain issuance of the patent to an assignee. Thus, where the assignment data is submitted after payment of the issue fee, the patent document will not include the assignment information. Therefore, as 37 CFR 3.81(b) was modified to provide for issuance of the patent to the assignee, the practice of waiving the rule (37 CFR 3.81(a)) under 37 CFR 1.183 is longer necessary and has been eliminated.

37 CFR 3.81(b), as modified, reads:

> Any request for issuance of an application in the name of the assignee submitted after the date of payment of the issue fee, and any request for a patent to be corrected to state the name of the assignee, must state that the assignment was submitted for recordation as set forth in § 3.11 before issuance of the patent, and must include a request for a certificate of correction under § 1.323 of this chapter (accompanied by the fee set forth in § 1.20(a)) and the processing fee set forth in § 1.17(i) of this chapter.

The request under 37 CFR 3.81(b) will be granted when:

(1) a request under 37 CFR 3.81 and the fee set forth in 37 CFR 1.17(i) are filed,
(2) the assignment was submitted for recordation prior to issuance of the patent, and
(3) a request for a certificate of correction and the fee set forth in 37 CFR 1.20(a) are submitted.

The fee for a request under 37 CFR 3.81 is $130.00 and will be charged to petitioner's deposit account as authorized.

Petitioner has met the requirements set forth above. Therefore, the request is granted.

This matter is being referred to the Certificates of Correction Branch for issuance of the requested Certificate of Correction.

Telephone inquiries should be directed to Paralegal Liana Chase at (571) 272-3282.

Frances Hicks
Petitions Examiner
Office of Petitions

UNITED STATES PATENT AND TRADEMARK OFFICE

COMMISSIONER FOR PATENTS
UNITED STATES PATENT AND TRADEMARK OFFICE
P.O. BOX 1450
ALEXANDRIA, VA 22313-1450
www.uspto.gov

Paper No. 16

SUGHRUE MION, PLLC
2100 PENNSYLVANIA AVENUE, N.W.
SUITE 800
WASHINGTON DC 20037

COPY MAILED

APR 1 4 2004

OFFICE OF PETITIONS

In re Application of	:	
Minoru Nakajima et al	:	
Application No. 10/019,656	:	ON PETITION
Filed: February 12, 2002	:	
Attorney Docket No. Q67799	:	

This is a decision on the petition, filed April 13, 2004, under 37 CFR 1.313(c)(2) to withdraw the above-identified application from issue after payment of the issue fee.

The petition is **GRANTED**.

The above-identified application is withdrawn from issue for consideration of a submission under 37 CFR 1.114 (request for continued examination). See 37 CFR 1.313(c)(2).

Petitioner is advised that the issue fee paid on February 26, 2004 in the above-identified application cannot be refunded. If, however, the above-identified application is again allowed, petitioner may request that it be applied towards the issue fee required by the new Notice of Allowance.[1]

Telephone inquiries should be directed to the undersigned at (703) 305-8859.

After receipt of the file in the Office of Petitions, the application will be forwarded to Technology Center AU 1772 for processing of the request for continued examination under 37 CFR 1.114.

Karen Creasy

Karen Creasy
Petitions Examiner
Office of Petitions
Office of the Deputy Commissioner
for Patent Examination Policy

---

[1] The request to apply the issue fee to the new Notice may be satisfied by completing and returning the new Issue Fee Transmittal Form PTOL-85(b), which includes the following language thereon: "Commissioner for Patents is requested to apply the Issue Fee and Publication Fee (if any) or re-apply any previously paid issue fee to the application identified above." Petitioner is advised that, whether a fee is indicated as being due or not, the Issue Fee Transmittal Form **must** be completed and timely submitted to avoid abandonment. Note the language in bold text on the first page of the Notice of Allowance and Fee(s) Due (PTOL-85).

UNITED STATES PATENT AND TRADEMARK OFFICE

Commissioner for Patents
United States Patent and Trademark Office
P.O. Box 1450
Alexandria, VA 22313-1450
www.uspto.gov

SUGHRUE MION ZINN MACPEAK & SEAS
2100 PENNSYLVANIA AVENUE NW
WASHINGTON, DC 20037-3202

COPY MAILED

MAR 0 2 2005

OFFICE OF PETITIONS

In re Application of	:	
Kenji Ishikawa et al	:	
Application No. 10/019,678	:	ON PETITION
Filed: January 4, 2002	:	
Attorney Docket No. Q67879	:	

This is a decision on the petition under 37 CFR 1.313(a) and (c)(2), filed February 28, 2005, which is being treated under 37 CFR 1.313(c)(2), to withdraw the above-identified application from issue after payment of the issue fee.

The petition is **DISMISSED**.

37 CFR 1.313(c) provides that:

Once the issue fee has been paid, the application will not be withdrawn from issue upon petition by the applicant for any reason except:

(1) Unpatentability of one of more claims, which petition must be accompanied by an unequivocal statement that one or more claims are unpatentable, an amendment to such claim or claims, and an explanation as to how the amendment causes such claim or claims to be patentable;

(2) Consideration of a submission pursuant to 37 CFR 1.114; or

(3) Express abandonment of the application. Such express abandonment may be in favor of a continuing application.

See Changes to Application Examination and Provisional Application Practice, Interim Rule, 65 Fed. Reg. 14865, 14873 (Mar. 20, 2000), 1233 Off. Gaz. Pat. Office 47, 54 (Apr. 11, 2000).

Upon payment of the issue fee, an application will not be withdrawn from issue upon petition except for the reasons enumerated in 37 CFR 1.313(c)). The circumstances of the above-identified application do not fall within any of those exceptions.

In the instant case, there is no indication that petitioner has submitted a submission as required by 37 CFR 1.114. Therefore, the Office will not grant the requested suspension of action. See MPEP 709(B).

Telephone inquiries should be directed to Wan Laymon at (571) 272-3220.

Wan Laymon
Petitions Examiner
Office of Petitions
Office of the Deputy Commissioner
for Patent Examination Policy

UNITED STATES PATENT AND TRADEMARK OFFICE

Commissioner for Patents
United States Patent and Trademark Office
P.O. Box 1450
Alexandria, VA 22313-1450
www.uspto.gov

SUGHRUE MION ZINN MACPEAK & SEAS
2100 PENNSYLVANIA AVENUE NW
WASHINGTON, DC 20037-3202

COPY MAILED

APR 19 2005

OFFICE OF PETITIONS

In re Application of	:
Kenji Ishikawa et al	: DECISION ON PETITION
Application No. 10/019,678	: UNDER 37 CFR 1.314
Filed: January 4, 2002	: TO DEFER ISSUANCE
Attorney Docket No. Q67879	

This is a decision on the petition under 37 CFR 1.314, filed April 11, 2005, to defer issuance of the instant application into a patent.

The petition is **granted.**

Issuance will be deferred for a period of one month from the date of this decision. At the end of this period, this matter will be referred to the Publishing Division to be processed into a patent.

If an additional deferral period is required, another petition and fee should be promptly submitted. The petition must include a showing of extraordinary circumstances; MPEP 1306.01.

Further correspondence with respect to this matter should be addressed as follows:

By mail: Mail Stop PETITIONS
Commissioner for Patents
Post Office Box 1450
Alexandria, VA 22313-1450

By hand: Customer Service Window
Mail Stop Petitions, Randolph Building
401 Dulany Street
Alexandria, VA 22314

By fax: (703) 872-9306
ATTN: Office of Petitions

This matter will remain in the Office of Petitions for one (1) month. Any questions concerning this matter may be directed to the undersigned at (571) 272-3210.

Irvin Dingle
Petitions Examiner
Office of Petitions
Office of the Deputy Commissioner
for Patent Examination Policy

05 MAY 2006

UNITED STATES PATENT AND TRADEMARK OFFICE

Commissioner for Patents
United States Patent and Trademark Office
P.O. Box 1450
Alexandria, VA 22313-1450
www.uspto.gov

Conrad J. Clark
Clark & Brody
1750 K Street, NW
Washington, D.C. 20009

In re Application of	:
Ellsworth, et al.	:DECISION ON PETITION
U.S. Application No. 10/019,680	:UNDER 37 CFR 1.78(a)(6)
PCT No.: PCT/US01/11732	:
Int. Filing Date: 27 April 2001	
Priority Date: 28 April 2000	
Attorney Docket No. 70869-0074US	:
For: BLOOD COMPONENT SEPARATOR DISK	

This decision is in response to "Amendment Pursuant to 37 CFR 1.312 and Petition to For Acceptance of Claim of Priority" which is being treated as a petition under 37 CFR §1.78(a)(6), filed July 22, 2005, to accept an unintentionally delayed claim under 35 U.S.C. §119(e) for the benefit of the prior-filed provisional application set forth in the concurrently filed amendment.

The petition is **DISMISSED AS MOOT**.

A petition under 37 CFR § 1.78(a)(6) is only applicable to those applications filed on or after November 29, 2000.

The petition was accompanied by an amendment to the first sentence of the specification following the title to include a reference to the prior-filed applications.

This nonprovisional application was filed on 17 April 2001, and was pending at the time of filing of this petition. While a reference to the prior-filed provisional application was not included in an Application Data Sheet (ADS) or in the first sentence of the specification following the title, reference nevertheless was made in the National Stage papers (see WIPO publication) of the above-identified application PCT.

The current procedure where a claim for priority under 37 CFR §1.78(a)(6) is not included in the first sentence of the specification or in an ADS but does appear in the national stage application papers within the time period under 37 CFR 1.78(a)(5)(ii) and the Office notes the claim for priority, no petition will be required to accept a late claim for priority. This is because the application would have been scheduled for publication on the basis of the information concerning the claim submitted elsewhere in the application within the time period set forth in 37 CFR

§1.78(a)(5)(ii). However, on the other hand, if the USPTO does not note the claim for priority to the prior-filed application(s), a petition will be required to accept a late claim for priority under 37 CFR § 1.78(a)(6).[1] In the instant case, the Office noted the claim for priority of the prior-filed application as shown by its inclusion on the filing receipt.

In view of the above, the $1370 petition fee submitted is unnecessary and will be refunded to petitioner's deposit account in due course.

Any questions concerning this decision on petition may be directed to Anthony Smith at (571) 272-3298. All other inquiries concerning either the examination procedures or status of the application should be directed to the Technology Center.

This matter is being referred to the Examiner of Technology Center AU 1723 for appropriate action on the amendment under 37 CFR 1.312 filed July 22, 2005.

Boris Milef
Legal Examiner
Office of Petitions and PCT Legal Administration

---

[1] *Note* MPEP 201.11 (III)(D) , pages 200-59 and 200-60 (Rev. 2. May 2004) and 66 Federal Register 67087 at 67089 (Dec. 28, 2001), effective December 28, 2001.

17 MAY 2006

UNITED STATES PATENT AND TRADEMARK OFFICE

Commissioner for Patents
United States Patent and Trademark Office
P.O. Box 1450
Alexandria, VA 22313-1450
www.uspto.gov

Clark & Brody
1090 Vermont Avenue, NW
Suite 250
Washington, D.C. 20005

In re Application of	:
Ellsworth, et al.	:DECISION ON PETITION
U.S. Application No. 10/019,680	:UNDER 37 CFR 1.78(a)(6)
PCT No.: PCT/US01/11732	:
Int. Filing Date: 27 April 2001	
Priority Date: 28 April 2000	
Attorney Docket No. 70869-0074US	:
For: BLOOD COMPONENT SEPARATOR DISK	

This decision is in response to "Amendment Pursuant to 37 CFR 1.312 and Petition to For Acceptance of Claim of Priority" which is being treated as a petition under 37 CFR §1.78(a)(6), filed July 22, 2005, to accept an unintentionally delayed claim under 35 U.S.C. §119(e) for the benefit of the prior-filed provisional application set forth in the concurrently filed amendment.

The petition is **DISMISSED AS MOOT**.

A petition under 37 CFR § 1.78(a)(6) is only applicable to those applications filed on or after November 29, 2000.

The petition was accompanied by an amendment to the first sentence of the specification following the title to include a reference to the prior-filed applications.

This nonprovisional application was filed on 17 April 2001, and was pending at the time of filing of this petition. While a reference to the prior-filed provisional application was not included in an Application Data Sheet (ADS) or in the first sentence of the specification following the title, reference nevertheless was made in the National Stage papers (see WIPO publication) of the above-identified application PCT.

The current procedure where a claim for priority under 37 CFR §1.78(a)(6) is not included in the first sentence of the specification or in an ADS but does appear in the national stage application papers within the time period under 37 CFR 1.78(a)(5)(ii) and the Office notes the claim for priority, no petition will be required to accept a late claim for priority. This is because the application would have been scheduled for publication on the basis of the information concerning

§1.78(a)(5)(ii). However, on the other hand, if the USPTO does not note the claim for priority to the prior-filed application(s), a petition will be required to accept a late claim for priority under 37 CFR § 1.78(a)(6).[1] In the instant case, the Office noted the claim for priority of the prior-filed application as shown by its inclusion on the filing receipt.

In view of the above, the $1370 petition fee submitted is unnecessary and will be refunded to petitioner's deposit account in due course.

Any questions concerning this decision on petition may be directed to Anthony Smith at (571) 272-3298. All other inquiries concerning either the examination procedures or status of the application should be directed to the Technology Center.

This matter is being referred to the Examiner of Technology Center AU 1723 for appropriate action on the amendment under 37 CFR 1.312 filed July 22, 2005.

Boris Milef
Legal Examiner
Office of Petitions and PCT Legal Administration

---

[1] *Note* MPEP 201.11 (III)(D), pages 200-59 and 200-60 (Rev. 2. May 2004) and 66 Federal Register 67087 at 67089 (Dec. 28, 2001), effective December 28, 2001.

UNITED STATES PATENT AND TRADEMARK OFFICE

10 SEP 2002

COMMISSIONER FOR PATENTS
UNITED STATES PATENT AND TRADEMARK OFFICE
WASHINGTON, D.C. 20231
www.uspto.gov

MILLEN, WHITE, ZELANO & BRANIGAN, P.C.
2200 CLARENDON BLVD.
SUITE 1400
ARLINGTON VA 22201

In re Application of BERTHELON et al.	:
Application No.: 10/019,683	:
PCT No.: PCT/EP00/06230	:
Int. Filing: 04 July 2000	:
Priority Date: 06 July 1999	: DECISION ON PETITION
Attorney Docket No.: MERCK 2358	: UNDER 37 CFR 1.47(a)
For: DIHYDROBENZODIAZEPINS AND	:
THEIR USE FOR TREATING	:
DYSLIPIDEMIA	:

This is a decision on applicant's petition under 37 CFR 1.47(a) filed in the United States Patent and Trademark Office (USPTO) on 11 June 2002.

BACKGROUND

On 04 July 2000, applicant filed international application No. PCT/EP00/06230 which claimed priority of an earlier French application filed 06 July 1999. A copy of the international application was communicated to the United States Patent and Trademark Office from the International Bureau on 11 January 2001.

On 14 December 2000, a Demand for international preliminary examination, in which the United States was elected, was filed prior to the expiration of nineteen months from the priority date. Accordingly, the thirty-month period for paying the basic national fee in the United States expired at midnight on 06 January 2002.

On 04 January 2002, applicant filed a transmittal letter (PTO-1390) requesting entry into the national stage in the United States of America under 35 U.S.C. § 371. Filed with the Transmittal Letter was, *inter alia*, the requisite basic national fee.

On 11 March 2002, a Notification of Missing Requirements (FORM PCT/DO/EO/905) was mailed to applicant indicating that an executed oath or declaration along with a surcharge for filing the oath or declaration after the thirty month period was required.

On 11 June 2002, in response to the Notification of Missing Requirements, applicant filed a petition under 37 CFR 1.47(a) in an attempt to satisfy the requirements of 35 U.S.C. 371(c)(4). The petition requested the acceptance of the application without the signature of inventor, Frederic Ausseil, on the grounds that the nonsigning inventor could not be found or reached after diligent effort. The petition included the requisite petition fee, a declaration signed by the 37 CFR 1.47(a) applicant Jean-Jacues Berthelon, Daniel Guerrier, Michel Brunet, Jean-Jacues Zeiller, and Francis Contard, on behalf of Frederic Ausseil and a statement of facts under 37 CFR 1.47(a) provided by Dr. Philippe Briet.

DISCUSSION

A petition under 37 CFR §1.47(a) must be accompanied by (1) the fee under 37 CFR §1.17(h), (2) factual proof that the non-signing joint inventor(s) refuses to execute the application or cannot be reached after diligent effort, (3) a statement of the last known address of the non-signing inventor(s), and (4) an oath or declaration by each available joint inventor on his or her own behalf and on behalf of the non-signing joint inventor(s).

Item (1) is satisfied with the payment of the $130 petition fee, charged to applicant's deposit account. Item (3) is satisfied with the statement of the last known address of non-signing inventor Frederic Ausseil.

With respect to item (2), applicant argues that Frederic Ausseil cannot be found or reached after diligent effort.

Inability to Find or Reach Nonsigning Inventor After Diligent Effort

With regard to the petitioner's inability to find or reach a nonsigning inventor after diligent effort, Section 409.03(d) of the Manual of Patent Examining Procedure (MPEP), Proof of Unavailability or Refusal, states, in pertinent part:

> Where inability to find or reach a nonsigning inventor "after diligent effort" is the reason for filing under 37 CFR 1.47, a statement of facts should be submitted that fully describes the exact facts which are relied on to establish that a diligent effort was made.
>
> The fact that a nonsigning inventor is on vacation or out of town and is therefore temporarily unavailable to sign the declaration is <u>not</u> an acceptable reason for filing under 37 CFR 1.47.
>
> ....
>
> The statement of facts must be signed, where at all possible, by a person having firsthand knowledge of the facts recited therein. Statements based on hearsay will not normally be accepted. Copies of documentary evidence such as internet searches, certified mail return receipts, cover letters of instructions, telegrams, that support a finding that the nonsigning inventor could not be found or reached should be

made part of the statement. The steps taken to locate the whereabouts of the nonsigning inventor should be included statement of facts. It is important that the statement contain facts as opposed to conclusions.

Petitioner provides the declaration of Dr. Philippe Briet, Scientific Director, LIPHA, S.A., the apparent assignee, to prove the inability to locate Frederic Ausseil. However, in his declaration, Dr. Briet merely declares "that it is impossible now, for us, to obtain a signature from Frederic Ausseil". This statement is not sufficient to prove that "a diligent effort" was made to contact the nonsigning inventor. The efforts undertaken in an attempt to obtain the signature of inventor Frederic Ausseil are not detailed nor is any documentation of attempts to contact Mr. Ausseil provided, as outlined in the MPEP section referenced above.

In sum, the evidence submitted does not support a finding that the nonsigning inventor is unavailable after diligent effort for the reasons set forth above. Accordingly, it is inappropriate to accord the national stage application status under 37 CFR §1.47(a) at this time.

With regard to the declaration submitted by applicants, the declaration was executed by the available joint inventors on their behalf and on behalf of the non-signing inventor. However, the declaration is deficient, in that it does not specify the application to which it is directed, as required by 37 CFR 1.497(a)(2). Thus, the declaration does not satisfy the requirements of 37 CFR 1.47(a).

CONCLUSION

The petition under 37 CFR §1.47(a) is **DISMISSED WITHOUT PREJUDICE**.

Any reconsideration on the merits of the petition under 37 CFR §1.47(a) must be filed within TWO (2) MONTHS from the mail date of this decision. Any reconsideration request should include a cover letter entitled "Renewed Petition Under 37 CFR §1.47(a)." No petition fee is required. Any further extensions of time available may be obtained under 37 CFR 1.136(a).

Any further correspondence with respect to this matter should be addressed to the Assistant Commissioner for Patents, Box PCT Legal, Washington, D.C. 20231, with the contents of the letter marked to the attention of the PCT Legal Office.

Boris Milef
Legal Examiner
PCT Legal Office

Cynthia M. Kratz
Attorney Advisor
PCT Legal Office

CMK/BM:cmk

Telephone: (703) 306-5467
Fax: (703) 308-6459

22 JUN 2004

#11

UNITED STATES PATENT AND TRADEMARK OFFICE

COMMISSIONER FOR PATENTS
UNITED STATES PATENT AND TRADEMARK OFFICE
P.O. BOX 1450
ALEXANDRIA, VA 22313-1450
www.uspto.gov

MILLEN, WHITE, ZELANO & BRANIGAN, P.C.
2200 CLARENDON BLVD.
SUITE 1400
ARLINGTON VA 22201

In re Application of BERTHELON et al. Application No.: 10/019,683 PCT No.: PCT/EP00/06230 Int. Filing: 04 July 2000 Priority Date: 06 July 1999 Attorney Docket No.: MERCK 2358 For: DIHYDROBENZODIAZEPINS AND THEIR USE FOR TREATING DYSLIPIDEMIA	:	DECISION ON PETITION UNDER 37 CFR 1.181

This is a decision on applicant's "Petition to Withdraw the Holding of Abandonment Or Alternatively, Petition under 37 CFR 1.137(b) to Revive an Unintentionally Abandoned Application", filed with the United States Patent and Trademark Office (USPTO) on 20 May 2004. Applicant requests that the application's abandoned status be withdrawn on the grounds that they did not receive the Office action mailed on 10 September 2002. The petition is being treated as a petition under 37 CFR 1.181.

BACKGROUND

On 11 March 2002, a Notification of Missing Requirements (Form PCT/DO/EO/905) was mailed to applicants indicating that an oath or declaration in compliance with 37 CFR 1.497(a) and (b) and the $130 surcharge for filing the oath or declaration after the thirty month period was required. On 11 June 2002, applicant filed a petition under 37 CFR 1.47(a) requesting acceptance of the application without the signature of Frederic Ausseil. On 10 September 2002, a decision dismissing the petition was mailed to applicant, indicating that the evidence provided did not support a finding that the inventor was unavailable after diligent effort and that the declaration provided did not comply with 37 CFR 1.497(a)(2).

On 30 January 2004, a Notification of Defective Response Abandonment was mailed to applicant, indicating that applicant had failed to respond to the 10 September 2002 Office action.

On 20 May 2004, applicant filed the instant petition requesting that the abandonment of application be withdrawn on the basis that the 10 September 2002 Office action was never received.

DISCUSSION

To withdraw the holding of abandonment, a proper showing is necessary in order to establish that papers were not received. As set forth in the Official Gazette at 1156 OG 53, the proper showing must include the following: (1) a statement by the practitioner that the Office action was not received by the practitioner; (2) a statement attesting that a search of the file

jacket and docket records indicates that the Office action was not received; and (3) a copy of the docket record where the non-received Office action would have been entered had it been received (the docket records must also be referenced in practitioner's statement).

Items (1) and (2) are satisfied by the practitioner's statement that the Office action was not received by the practitioner and his statement attesting that a search of the file jacket and docket records indicated that the Office action was not received.

With regard to Item (3), the docket record required is the record showing all responses docketed for the date a response was due (10 November 2002 in this case) indicating that there was no record of a response for the present application being due on that date. This docket record was attached to and referenced in practitioner's statement and indicates that the Office communication in this application was not received. Thus, applicant has provided the proper showing necessary to withdraw the holding of abandonment and the petition may be properly granted at this time.

On 20 May 2004, applicant submitted a declaration executed by all the inventors, which meets the requirements of 37 CFR 1.497(a) and (b) and is acceptable.

CONCLUSION

For the reasons presented above, the Petition under 37 CFR 1.181 is **GRANTED**.

The 30 January 2004 Notification of Defective Response Abandonment (Form PCT/DO/EO/909) is hereby **VACATED.**

The application will be forwarded to the United States Designated/Elected Office for further processing. The declaration fulfills the requirements of 37 CFR 1.497(a) and (b). The 35 U.S.C. 371(c)(1), (c)(2) and (c)(4) is **20 May 2004.**

Cynthia M. Kratz

/Cynthia M. Kratz
Attorney Advisor
Office of PCT Legal Administration.

Telephone: (703) 306-5467

UNITED STATES PATENT AND TRADEMARK OFFICE

Commissioner for Patents
United States Patent and Trademark Office
P.O. Box 1450
Alexandria, VA 22313-1450
www.uspto.gov

Date Mailed : 02/08/06

Patent No. : 6985738 B1
Inventor : EKSTAM, HANNA MARIA
Patent Issued : 01/10/06
Docket No. : **2380-588**

Re: Request for Certificate of Correction

Consideration has been given your request for the issuance of a certificate of correction for the above-identified patent under the provisions of Rule(s) 1.322.

Inspection of the file of the application for the patent reveals that in the cover page of the patent will be printed in accordance with the record (no fee or authorization to charge fee).
"Therefore, no correction(s) is in order here under United States Codes (U.S.C.) 254 and the Code of Federal Regulation (C.F.R.) 1322."

In view of the foregoing, your request in this matter is hereby denied.

Lamonte M. Newsome
For Cecelia Newman, Supervisor
Decisions & Certificates
Of Correction Branch
(703) 305-8309 or (703)-308-9390 #112

NIXON & VANDERHYE, PC
901 NORTH GLEBE ROAD, 11TH FLOOR
ARLINGTON VA 22203

Cbn/Lmn

UNITED STATES PATENT AND TRADEMARK OFFICE

Commissioner for Patents
United States Patent and Trademark Office
P.O. Box 1450
Alexandria, VA 22313-1450
www.uspto.gov

Lucent Technologies Inc
Docket Administrator Room 3C 512
600 Mountain Avenue
PO Box 636
Murray Hill NJ 07974-0636

COPY MAILED

APR 13 2007

OFFICE OF PETITIONS

In re Application of :
Bhatoolaul, et al. :
Application No. 10/019,702 : ON PETITION
Filed: December 27, 2001 :
Attorney Docket No. Bhatoolaul 4-16 :
For: CODE DIVISION MULTIPLE ACCESS SYSTEM HAVING IMPROVED PILOT CHANNELS

This is a decision on the petition under 37 CFR 1.137(b), filed on December 26, 2006 (certificate of mailing date December 21, 2006), to revive the above-identified application.

The petition under 37 CFR 1.137(b) is **GRANTED**.

This application became abandoned for failure to timely and properly respond to the final Office action mailed March 22, 2006, which set an extendable three month period for reply. Applicants filed an amendment and one month extension of time on July 27, 2006 (certificate of mailing date July 24, 2006) which failed to place the application in *prima facie* condition for allowance, as was explained in the August 16, 2006 Advisory Action. On October 4, 2006 (certificate of mailing date October 2, 2006), petitioners requested a four month extension of time and submitted another amendment. A Notice of Abandonment was mailed on November 8, 2006. The date of abandonment is July 23, 2006.

Applicants have submitted a RCE and required fee and a copy of the amendment filed on certificate of mailing date October 2, 2006 in reply to the March 22, 2006 final Office action, an acceptable statement of the unintentional nature of the delay in responding to the March 22, 2006 final Office action, and the petition fee. Therefore, the petition is granted.

Pursuant to 37 CFR 1.136, an extension of time must be filed prior to the expiration of the maximum period obtainable for reply to avoid abandonment. Accordingly, since the $1,590.00 extension of time submitted on October 4, 2006 (certificate of mailing date October 2, 2006), was submitted subsequent to the maximum period obtainable for reply, this fee is unnecessary and will be credited to petitioners' deposit account.

After the mailing of this decision the application will be forwarded to Technology Center AU 2616 for consideration of the RCE and amendment filed on December 26, 2006 (certificate of mailing date December 21, 2006).

Telephone inquiries pertaining to this decision may be directed to the undersigned at (571) 272-3230.

Shirene Willis Brantley

Shirene Willis Brantley
Senior Petitions Attorney
Office of Petitions

MAR 2 6 2002

#3

UNITED STATES PATENT AND TRADEMARK OFFICE

COMMISSIONER FOR PATENTS
UNITED STATES PATENT AND TRADEMARK OFFICE
WASHINGTON, D.C. 20231
www.uspto.gov

Edward R. Freedman
Collard & Roe, PC
1077 Northern Boulevard
Roslyn, New York 11576

In re Application of
Elke Pogge Von Strandmann
Application No.: 10/019,708
PCT No.: PCT/EP00/01822
Int. Filing Date: 22 February 2000
Priority Date: 25 February 1999
Attorney Docket No.: POGGE VON STRANDMANN (PCT)
For: Preparation For The Treatment Of Pigmentation Disorders

DECISION ON PETITION UNDER 37 CFR 1.137(b)

The petition to revive under 37 CFR 1.137(b) filed on 27 December 2001 in the above-captioned application is hereby **GRANTED** as follows:

The appropriate petition fee as required by 37 CFR 1.17(m) has been submitted.

All of the requirements of 37 CFR 1.137(b) for revival have been submitted.

Applicant's statement that "the application became abandoned unintentionally" has been interpreted as meaning that the "entire delay in filing the required reply from the due date for the required reply until the filing of a grantable petition under 37 CFR 1.137(b) was unintentional" as required by 37 CFR 1.137(b)(3) at the time of filing this petition. If this is an incorrect interpretation in view of the rules, petitioner is required to provide a statement to that effect.

A review of the declaration of the inventor filed 27 December 2001 reveals that it is in compliance with 37 CFR 1.497. Since the translation of the international application and the declaration of the inventor were submitted after 30 months from the priority date claimed of 25 February 1999, an amount of $195.00, including $130.00 processing fee (fee code 156) for submitting a translation after 30 months, $65.00 surcharge (fee code 154) for filing

an oath or declaration after 30 months, will be charged to Counsel's Deposit Account No. 03-2468, as authorized in the Transmittal Letter accompanying this petition.

Since the international application has an international filing date after 08 June 1995, no terminal disclaimer is required.

Applicant's claim for priority is acknowledged. The application has an international filing date of 22 February 2000 under 35 U.S.C. 363 and a date of 27 December 2001 under 35 U.S.C. 371.

The request to revive the application abandoned under 35 U.S.C. 371(d) is granted as to the National Stage in the United States of America.

The application is being forwarded to the National Stage Processing Division for processing in accordance with this decision, that is, for charging $65.00 (fee code 154) and $130.00 (fee code 156) to Counsel's Deposit Account No. 03-2468 , for issuance of a "Notification of Acceptance of Application" under 35 U.S.C. 371(c) and 37 CFR 1.495 (Form PCT/DO/EO/903) and for preparation and mailing of a filing receipt.

Leonard E. Smith

Leonard E. Smith
PCT Legal Examiner
PCT Legal Office

HT/LS:ht

Hien Tran

Hien Tran
Detailee
PCT Legal Office

Tel: (703) 308-6162

UNITED STATES PATENT AND TRADEMARK OFFICE

APR 2 6 2002

COMMISSIONER FOR PATENTS
UNITED STATES PATENT AND TRADEMARK OFFICE
WASHINGTON, D.C. 20231
www.uspto.gov

McGlew and Tuttle, P.C.
Scarborough Station
Scarborough, NY 10510-0827

#4

In re Application of	:	
Broker et al.	:	
Application No.: 10/019736	:	DECISION ON
PCT No.: PCT/DE01/00510	:	
Int. Filing Date: 09 February 2001	:	PETITION UNDER
Priority Date: 09 February 2000	:	
Attorney Docket No.: 70308	:	37 CFR 1.137(b)
For: Ball And Socket Joint	:	

This is a decision on applicant's petition under 37 CFR 1.137(b) filed on 25 October 2001.

BACKGROUND

This international application was filed on 09 February 2001 and claimed an earlier priority date of 09 February 2000. The International Bureau transmitted a copy of the published international application to the USPTO on 16 August 2001. No Demand electing the United States was filed prior to the elapse of 19 months from the priority date. Consequently, the twenty period for payment of the basic national fee in the United States expired as of midnight on 09 October 2001. This application became abandoned with respect to the United States for failure to timely pay the basic national fee.

On 25 October 2001, applicants filed a Transmittal Letter accompanied by, *inter alia*, the instant petition.

DISCUSSION

A grantable petition to revive an abandoned application under 37 CFR 1.137(b) must be accompanied by (1) the required reply, unless previously filed; (2) the petition fee as set forth in § 1.17(m); (3) a statement that the entire delay in filing the required reply from the due date for the reply until the filing of a grantable petition pursuant to this paragraph was unintentional. The Commissioner may require additional information where there is a question whether the delay was unintentional; and (4) any terminal disclaimer (and fee as set forth in § 1.20 (d)) required pursuant to paragraph (c) of this section.

Regarding requirement (1), the petition is accompanied by the required reply in the form of the basic national fee.

Regarding requirement (2), the petition is accompanied by the petition fee.

Regarding requirement (3), the petition includes an appropriate statement.

Regarding requirement (4), no terminal disclaimer is required because the international filing date of this application is later than 8 June 1995.

DECISION

The petition to revive the application abandoned under 35 U.S.C. 371(d) is **GRANTED** with respect to the national stage in the United States.

This application is being forwarded to the United States Designated/Elected Office (DO/EO/US) for further processing, including the preparation and mailing of a Notification of Missing Requirements (Form PCT/DO/EO/905) requiring the filing of a properly executed oath or declaration and a surcharge under 37 CFR 1.492(e).

Leonard Smith
PCT Legal Examiner
PCT Legal Office

George Dombroske
PCT Legal Examiner
PCT Legal Office
Tel: (703) 308-6721
Fax: (703) 308-6459

UNITED STATES PATENT AND TRADEMARK OFFICE

UNITED STATES DEPARTMENT OF COMMERCE
United States Patent and Trademark Office
Address: COMMISSIONER FOR PATENTS
P.O. Box 1450
Alexandria, Virginia 22313-1450
www.uspto.gov

BURNS & LEVINSON, LLP
125 SUMMER STREET
BOSTON, MA 02110

Mail Date: 04/20/2010

Applicant	: Nancy Cauwenberghs	: DECISION ON REQUEST FOR
Patent Number	: 7622259	: RECALCULATION of PATENT
Issue Date	: 11/24/2009	: TERM ADJUSTMENT IN VIEW
Appliction No	: 10/019,740	: OF WYETH AND NOTICE OF INTENT TO
Filed	: 05/08/2002	: ISSUE CERTIFICATE OF CORRECTION
		:

The Request for Recalculation is **GRANTED** to the extent indicated.

The patent term adjustment has been determined to be **932** days. The USPTO will *sua sponte* issue a certificate of correction reflecting the amount of PTA days determined by the recalculation.

Prior to the issuance of the certificate of correction, the USPTO will afford patentee an opportunity to be heard and request reconsideration. Accordingly, patentee has **one month or thirty (30) days**, whichever is longer, to file a request for reconsideration of this patent term adjustment calculation. See 35 U.S.C. 154(b)(3)(B)(ii) and 37 CFR 1.322(a)(4). No extensions of time will be granted under 37 CFR 1.136.

Patentee should use document code PET.OP if electronically filing a request for reconsideration of this patent term adjustment calculation. The patentee must also include the information required by 37 CFR 1.705(b)(2) and the fee required by 37 CFR 1.18(e). If patentee does not file a timely request for reconsideration of this patent term adjustment calculation including the information required by 37 CFR 1.705(b)(2) and the fee required by 37 CFR 1.18(e), the USPTO will issue a certificate of correction reflecting the PTA determination noted above.

Patentee should be aware that in order to preserve the right to review in the United States District Court for the District of Columbia of the USPTO patent term adjustment determination, patentee must ensure that he or she also take the steps required under 35 U.S.C. 154(b)(4)(A) in a timely manner. Nothing in the request for recalculation should be construed as providing an alternative time frame for commencing a civil action under 35 U.S.C. 154(b)(4)(A).

Any questions concerning this decision should be directed to the Office of Patent Legal Administration at 571-272-7702.

SPE RESPONSE FOR CERTIFICATE OF CORRECTION

Paper No.: —

DATE : 1/30/07

TO SPE OF : ART UNIT 1714

SUBJECT : Request for Certificate of Correction for Appl. No.: 10/619754 Patent No.: 7041213 B2

Please respond to this request for a certificate of correction within 7 days.

Please review the requested changes/corrections as shown in the **COCIN** document(s) in the IFW application image. No new matter should be introduced, nor should the scope or meaning of the claims be changed.

Please complete the response (see below) and forward the completed response to scanning using document code **COCX**.

Virginia Tolbert
Certificates of Correction Branch

703-308-9390 ext. 113

Thank You For Your Assistance

The request for issuing the above-identified correction(s) is hereby:
Note your decision on the appropriate box.

- ☐ **Approved** — **All** changes apply.
- ☐ **Approved in Part** — Specify below which changes **do not** apply.
- ☒ **Denied** — State the reasons for denial below.

Comments: First, it is noted that the requested changes will affect the scope and meaning of the claims. Since applicant has not pointed to any support (he admits fault on his part), it is proper to deny the request.

Vasu Jagannathan
SPE

1714
Art Unit

UNITED STATES PATENT AND TRADEMARK OFFICE

Commissioner for Patents
United States Patent and Trademark Office
P.O. Box 1450
Alexandria, VA 22313-1450
www.uspto.gov

February 27, 2007

Eric Ives
KNOBBE, MARTENS, OLSON & BEAR, LLP
2040 Main Street
14th Floor
Irvine, CA 92614

Patent No: 7041713 B2
Application No: 10/019754
Applicant: Koji Yamauchi, et al.
Issued: May 9, 2006
Title: **ARTIFICIAL DURA MATER**

Request for Certificate Of Correction:

Consideration has been given to your request for the issuance of a certificate of correction for the above- identified patent under the provisions of Rule 1.323.

Inspection of the application for the above patent reveals that the errors mentioned in your request are in fact printed in accordance with the record in the Patent and Trademark Office, as passed to issue by the examiner. Per the examiner "First it is noted that the requested changes will affect the scope and meaning of the claims, also attorney has not provided any supporting documents".

In view of the foregoing your request in this matter are hereby **denied**.

Further communication concerning this application should be directed to the Decisions and Certificate of Correction Branch.

Virginia Tolbert
For Cecelia Newman, Supervisor
Decisions and Certificate of Correction
(703) 308-8309 or (703) 308-9390 ext. 113

vt

UNITED STATES PATENT AND TRADEMARK OFFICE

COMMISSIONER FOR PATENTS
UNITED STATES PATENT AND TRADEMARK OFFICE
P.O. BOX 1450
ALEXANDRIA, VA 22313-1450
www.uspto.gov

BROMBERG & SUNSTEIN LLP
125 SUMMER STREET
BOSTON, MA 02110-1618

COPY MAILED

JUN 27 2005

OFFICE OF PETITIONS

ON PETITION

In re Application of :
Graham Paul Luscombe, et al. :
Application No. 10/019,802 :
Filed: May 6, 2002 :
Attorney Docket No. 2544/111 :

This is a decision on the petition, filed June 23, 2005, under 37 CFR 1.313(c)(2) to withdraw the above-identified application from issue after payment of the issue fee.

The petition is **GRANTED**.

The above-identified application is withdrawn from issue for consideration of a submission under 37 CFR 1.114 (request for continued examination). See 37 CFR 1.313(c)(2).

Petitioner is advised that the issue fee paid on April 22, 2005, in the above-identified application, cannot be refunded. If, however, the above-identified application is again allowed, petitioner may request that it be applied towards the issue fee required by the new Notice of Allowance.[1]

Telephone inquiries relating to this decision should be directed to the undersigned at (571) 272-3204.

The application is being referred to Technology Center AU 1621 for further processing of the request for continued examination under 37 CFR 1.114 filed pursuant to 37 CFR 1.10 on June 23, 2005.

Sherry D. Brinkley
Petitions Examiner
Office of Petitions

[1]The request to apply the issue fee to the new Notice may be satisfied by completing and returning the new Issue Fee Transmittal Form PTOL-85(b), which includes the following language thereon: "Commissioner for Patents is requested to apply the Issue Fee and Publication Fee (if any) or re-apply any previously paid issue fee to the application identified above." Petitioner is advised that, whether a fee is indicated as being due or not, the Issue Fee Transmittal Form **must** be completed and timely submitted to avoid abandonment. Note the language in bold text on the first page of the Notice of Allowance and Fee(s) Due (PTOL-85).

10 DEC 2002
UNITED STATES PATENT AND TRADEMARK OFFICE

COMMISSIONER FOR PATENTS
UNITED STATES PATENT AND TRADEMARK OFFICE
WASHINGTON, D.C. 20231
www.uspto.gov

J. Peter Fasse
Fish & Richardson, P.C.
225 Franklin Street
Boston, MA. 02110

In re Application of SOUKOS, et.al. U.S. Application No.: 10/019,837 PCT No.: PCT/US00/13231 Int. Filing Date: 12 May 2000 Priority Date: 12 May 1999 Attorney Docket No.: 00786-421002 For: PERMEABILIZING BIOFILMS	DECISION ON PETITION UNDER 37 CFR 1.47(a)

This decision is in response to applicant's "Petition Under 35 U.S.C. § 116 and 37 C.F.R. § 1.47(a)" filed 10 September 2002 in the United States Patent and Trademark Office (USPTO).

BACKGROUND

On 12 May 2000, applicant filed international application PCT/US00/13231, which claimed priority of an earlier application filed 12 May 1999. A Demand for international preliminary examination, in which the United States was elected, was filed prior to the expiration of nineteen months from the priority date. Accordingly, the thirty-month period for paying the basic national fee in the United States expired at midnight on 12 November 2001.

On 09 November 2001, applicant filed a transmittal letter for entry into the national stage in the United States, which was accompanied by the requisite basic national fee as required by 35 U.S.C. 371(c)(1). An oath or declaration of the inventors was not included.

On 12 March 2002, applicant was mailed a NOTIFICATION OF MISSING REQUIREMENTS UNDER 35 U.S.C. 371 (Form PCT/DO/EO/905) informing applicant of the need to provide an executed oath or declaration of the inventors, in compliance with 37 CFR 1.497(a) and (b), identifying the application by the International Application number and international filing date. Applicant was further advised of the need to provide payment of the surcharge for providing an executed oath or declaration of the inventors later than thirty months from the priority date. Applicant was given two months to respond and advised that this time period could be extended with a proper petition and payment of fees.

On 10 September 2002, applicant responded with the present petition to accept the present oath or declaration without the signature of joint inventor Shun Lee accompanied by a check in the amount of $130.00 for the petition fee for a petition under 37 CFR 1.47(a); a check

in the amount of $65.00 as payment of the surcharge for providing an executed oath or declaration of the inventors later than thirty months from the priority date) and a check in the amount of $720.00 as payment of the four-month extension of time fee; a petition for a four-month extension of time, and a declaration executed by joint inventors Nikolaos S. Soukos and Apostolos G. Doukas. With the filing of the petition for a four-month extension of time and payment of fee, applicant's petition is considered to be timely filed.

DISCUSSION

A petition under 37 CFR 1.47(a) must be accompanied by (1) the fee under 37 CFR 1.17(h), (2) factual proof that the missing joint investor refuses to execute the application or cannot be reached after diligent effort, (3) a statement of the last known address of the missing inventor, and (4) an oath or declaration by each 37 CFR 1.47(a) applicant on his or her own behalf and on behalf of the non-signing joint inventor. With the filing of the present petition and accompanying papers, applicant has satisfied all four items and it is appropriate to grant the petition under 37 CFR 1.47(a).

Regarding item (1), applicant has provided payment of the appropriate petition fee.

As to item (2), 35 U.S.C. 4 precludes officers and employees of the USPTO from applying for a patent and from acquiring, directly or indirectly, except by inheritance or bequest, any patent or any interest in any patent, issued or to be issued by the USPTO. As such, the filed declaration of counsel detailing Dr. Lee's refusal to execute the combined declaration and power of attorney satisfies item (2) above.

Regarding item (3), applicant has supplied a statement of the last known address of Dr. Lee.

As to item (4), applicant has a combined declaration and power of attorney executed by joint inventors Nikolaos S. Soukos and Apostolos G. Doukas on their own behalf and on behalf of Dr. Lee.

Accordingly, applicant has satisfied all four items detailed above and it is proper to grant applicant's petition at this time.

CONCLUSION

For the reasons above, the petition is **GRANTED**.

The application has an international filing date of 12 May 2000 under 35 U.S.C. 363, and will be given a date of **10 September 2002** under 35 U.S.C. 371 (c).

As provided in 37 CFR 1.47(a), a notice of the filing of this application will be forwarded

to the non-signing inventor at his last known address of record.

A notice of the filing of the application under 37 CFR 1.47(a) will be published in the Official Gazette.

This application is being forwarded to the United States Designated/Elected Office (DO/EO/US) for further processing in accordance with this decision.

Richard Cole
Legal Examiner
PCT Legal Office

Derek A. Putonen
Petitions Attorney
PCT Legal Office
Tel: (703) 305-0130
Fax: (703) 308-6459

10 DEC 2002

UNITED STATES PATENT AND TRADEMARK OFFICE

COMMISSIONER FOR PATENTS
UNITED STATES PATENT AND TRADEMARK OFFICE
WASHINGTON, D.C. 20231
www.uspto.gov

Dr. Shun Lee
1600 S. Eads Street, Apt. 617S
Arlington, VA. 22202

In re Application of
SOUKOS, et al.
U.S. Application No.: 10/019,837
PCT No.: PCT/US00/13231
Int. Filing Date: 12 May 2000
Priority Date: 12 May 1999
Attorney Docket No.: 00786-421002
For: PERMEABILIZING BIOFILMS

Dear Dr. Lee:

You are named as an inventor in the above identified United States patent application, filed under the provisions of 37 CFR 1.47(a) and 35 U.S.C. 116. Should a patent be granted, you will be designated as an inventor.

As a named inventor, you are entitled to inspect any paper in the file wrapper of the application, order copies of all or any part thereof (at a prepaid cost per 37 CFR 1.19) or to make your position of record in the application. Alternately, you may arrange to do any of the preceding through a registered patent agent or attorney presenting written authorization from you. If you care to join in the application, counsel of record (see below) would presumably assist you. Joining in the application would entail the filing of the appropriate oath or declaration by you pursuant to 37 CFR 1.63.

Richard Cole
Legal Examiner
PCT Legal Office

Derek A. Putonen
Attorney Advisor
PCT Legal Office

J. Peter Fasse
Fish & Richardson, P.C.
225 Franklin Street
Boston, MA. 02110

FEB 2 5 2002

UNITED STATES PATENT AND TRADEMARK OFFICE

COMMISSIONER FOR PATENTS
UNITED STATES PATENT AND TRADEMARK OFFICE
WASHINGTON, D.C. 20231
www.uspto.gov

GIFFORD, KRASS, GROH, SPRINKLE
ANDERSON & CITKOWSKI, PC
280 N OLD WOODARD AVE
SUITE 400
BIRMINGHAM, MI 48009

In re Application of IDEKER et al. Serial No.: 10/019,873 PCT No.: PCT/US00/08695 Int. Filing Date: 30 March 2000 Priority Date: 30 March 1999 Attorney's Docket No.: UAB-15602/22 For: METHOD AND APPARATUS FOR PASSIVE CARDIAC STIMULATION	DECISION ON PETITION UNDER 37 CFR 1.137(b)

The petition to revive under 37 CFR 1.137(b) filed 26 October 2001 in the above-captioned application is hereby **GRANTED** as follows:

Applicants' statement that the "entire delay in filing the required reply from the due date for the required reply until the filing of a grantable petition under 37 CFR 1.137(b) was unintentional" meets the requirements of 37 CFR 1.137(b)(3).

A review of the application file reveals that the basic national fee of $50 and the required petition fee of $640 have been paid and thus, the requirements of 37 CFR 1.137(b) have been satisfied. Therefore, the request to revive the application abandoned under 35 U.S.C. 371(d) is granted as to the National stage in the United States of America.

This application is being forwarded to the National Stage Processing Division of the Office of PCT Operations for continued processing including the issuance of a Notification of Missing Requirements indicating that an oath or declaration executed by the inventors is required.

Cynthia M. Kratz

Cynthia M. Kratz
Attorney Advisor
PCT Legal Office
Telephone: (703) 306-5467

UNITED STATES PATENT AND TRADEMARK OFFICE

Commissioner for Patents
United States Patent and Trademark Office
P.O. Box 1450
Alexandria, VA 22313-1450
www.uspto.gov

Paper No. 13

GIFFORD KRASS GROH SPRINKLE
ANDERSON & CITKOWSKI, PC
280 N OLD WOODWARD AVE
SUITE 400
BIRMINGHAM, MI 48009

COPY MAILED

JUL 2 9 2004

OFFICE OF PETITIONS

In re Application of	:	
Raymond E. Ideker et al	:	
Application No. 10/019,873	:	NOTICE
Filed: August 26, 2002	:	
Attorney Docket No. UAB-15602/22	:	

This is a notice regarding your request for acceptance of a fee deficiency submission under 37 CFR 1.28. On September 1, 1998, the Court of Appeals for the Federal Circuit held that 37 CFR 1.28(c) is the sole provision governing the time for correction of the erroneous payment of the issue fee as a small entity. **See DH Technology v. Synergystex International, Inc. 154 F.3d 1333, 47 USPQ2d 1865 (Fed. Cir. Sept. 1, 1998).**

The Office no longer investigates or rejects original or reissue applications under 37 CFR 1.56. **1098 Off. Gaz. Pat. Office 502 (January 3, 1989)**. Therefore, nothing in this Notice is intended to imply that an investigation was done.

Your fee deficiency submission under 37 CFR 1.28 is hereby **ACCEPTED**.

Inquiries related to this communication should be directed to the Office of Petitions Staff at (703) 305-9285.

This file is being forwarded to Technology Center AU 3762.

Wan Laymon
Petitions Examiner
Office of Petitions
Office of the Deputy Commissioner
for Patent Examination Policy

APR 2 6 2002

UNITED STATES PATENT AND TRADEMARK OFFICE

COMMISSIONER FOR PATENTS
UNITED STATES PATENT AND TRADEMARK OFFICE
WASHINGTON, D.C. 20231
www.uspto.gov

Timothy E. Newholm
Boyle, Fredrickson, Newholm, Stein & Gratz, S.C.
250 Plaza, Suite 1030
250 East Wisconsin Avenue
Milwaukee, WI 53202

In re Application of JORDAN, Peter, et al. Application No.: 10/019,889 PCT No.: PCT/EP00/05263 Int. Filing Date: 07 June 2000 Priority Date: 29 June 1999 Attorney's Docket No.: 72.054 For: MACHINE HAVING A TYPE PLATE COMPRISING A STORAGE DEVICE	DECISION ON PAPERS UNDER 37 C.F.R. 1.42

On 28 December 2001, applicants filed papers for entry into the national stage in the United States. The declaration indicated that one inventor is deceased. This has been treated as a request for status under 37 CFR 1.42.

BACKGROUND

On 07 June 2000, applicants filed international application PCT/EP00/05263, which claimed a priority date of 29 June 1999 and which designated the United States. A copy of the international application was communicated to the United States Patent and Trademark Office (USPTO) from the International Bureau on 11 January 2001.

A Demand electing the United States was filed with the International Preliminary Examining Authority on 24 October 2000. The election was made prior to the expiration of the nineteen months from the priority date. As a result, the deadline for payment of the basic national fee was extended to expire thirty months from the priority date, i.e., 31 December 2001 (29 December 2001 was a Saturday).

On 28 December 2001, applicants filed a submission for entry into the national stage in the United States which was accompanied by, *inter alia*, the U.S. Basic National Fee and a declaration.

DISCUSSION

Under 37 CFR 1.42, in case of the death of the inventor, the legal representative (executor, administrator, etc.) of the deceased inventor may make the necessary oath or declaration, and apply for and obtain the patent.

The declaration is signed by inventors Frank Meyer-Hessing, Michael Steffen, Jean Borun and Jürgen Röming and provides their citizenships, residences and mailing addresses. Additionally, the declaration identifies Christina Jordan as "administratorix" [*sic.*] of deceased inventor Peter Jordan and provides the citizenship, residence and mailing address of the legal representative in addition to the citizenship, and last known mailing address and residence of Peter Jordan.

CONCLUSION

For the above reasons, the request for status under 37 C.F.R. 1.42 is **GRANTED**.

The application has an international filing date of 07 June 2000 under 35 U.S.C. §363 and a date of 28 December 2001 under 35 U.S.C. §371. This application is being forwarded to the National Stage Processing Division of the Office of the PCT Operations for continued processing.

Boris Milef
PCT Legal Examiner
PCT Legal Administration

Erin M. Pender
Attorney Advisor
PCT Legal Administration

Telephone: 703-305-0455
Facsimile: 703-308-6459

14 JUN 2004

UNITED STATES PATENT and TRADEMARK OFFICE

COMMISSIONER FOR PATENTS
UNITED STATES PATENT AND TRADEMARK OFFICE
P.O BOX 1450
ALEXANDRIA, VA 22313-1450
www.uspto.gov

Harness, Dickey & Pierce, P.L.C.
Post Office Box 8910
Reston, Virginia 20195

In re Application of	:	DECISION ON
OLSSON, Bertil	:	
Application No.: 10/019,891	:	
PCT No.: PCT/SE00/01440	:	PETITION
Int. Filing Date: 06 July 2000	:	
Priority Date: 09 July 1999	:	
Attorney's Docket No.: 10400-000003/US	:	UNDER 37 CFR 1.182
For: METHOD FOR HANDLING A DATABASE	:	

This decision is in response to the "PETITION UNDER 37 CFR §1.181 TO WITHDRAW HOLDING OF ABANDONMENT" filed 23 December 2003, which is being treated as a petition under 37 CFR 1.182 to withdraw the holding of abandonment. Applicant's Deposit Account No. 08-0750 is being charged the $130.00 petition fee as authorized in the petition submitted on 24 December 2003.

BACKGROUND

On 06 July 2000, this international application was filed, claiming an earliest priority date of 09 July 1999.

On 28 December 2001, applicant filed a Transmittal letter for entry into the national stage in the United States, which was accompanied, inter alia, by the requisite basic national fee as required by 35 U.S.C. 371 (c)(1). However, no oath or declaration of the inventors accompanied the transmittal letter.

On 28 February 2002, the United States Designated/Elected Office (DO/EO/US) mailed a "NOTIFICATION OF MISSING REQUIREMENTS UNDER 35 U.S.C. 371 IN THE UNITED STATES DESIGNATED/ELECTED OFFICE (DO/EO/US)" (Form PCT/DO/EO/905) which informed applicant, inter alia, that an "Oath or Declaration of the inventors, in compliance with 37 CFR 1.497(a) and (b), identifying the application by International application number and international filing date" must be submitted within two(months) from the date of this notice or by 32 months from the priority date, whichever is later, in order to avoid abandonment of the national stage application.

On 04 December 2003, the DO/EO/US mailed a "NOTIFICATION OF ABANDONMENT" (Form PCT/DO/EO/909), which indicated that the time period to reply to the Notification of Missing Requirements has expired.

In response to the "NOTIFICATION OF ABANDONMENT" mailed on 04 December 2003, applicant has submitted the instant petition requesting withdrawal of the Notice of Abandonment. In support of the petition, petitioner has provided a copy of the returned/stamped receipt card acknowledging a receipt date of 29 April 2002 and a statement that there was sufficient identification of the correct Application Number in the remaining pages of the Reply to lead to correlate the Reply with the correct Application.

DISCUSSION

POSTCARD:

Applicant's present petition accompanied by a copy of the following documents, filed purportedly, *inter alia*, with the PTO as indicated in the stamped postcard:

(1) Executed Declaration
(2) Copy of Notice

The postcard lists the above items and bears a USPTO date of stamp as 29 April 2002.

MPEP 503 provides:

> A postcard receipt which itemizes and properly identifies the papers which are being filed serves as *prima facie* evidence of receipt in the PTO of all the items listed thereon on the date stamped thereon by the PTO.

Applicant's postcard is accepted as *prima facie* that a Declaration was deposited with the U.S. Patent and Trademark Office on 29 April 2002.

Accordingly, the date of receipt for the Declaration is 29 April 2002.

INCORRECT NUMBER:

Applicant reviewed the Reply to the Notification of Missing Requirements and noticed an incorrect application number on the first page filed identification heading.
In this instance, there is sufficient evidence that the application number 10/019,496 on the first page of the "LETTER SUBMITTING DOCUMENTS FOR COMPLETION OF AN APPLICATION PURSUANT TO 35 U.S.C. §371 was an obvious error. It is apparent from the papers submitted that the correct application number to the Reply to the Notification of Missing Requirement is 10/019,891 because there is sufficient identification of the correct Application Number in the remaining pages of the Reply. For example, the second and third pages of the reply contain the correct application number and all the pages contain the correct attorney docket for the above application. Only the first page contains the incorrect number.

Accordingly, applicant petition to accept these papers for the instant application is granted.

DECISION

Applicant's request to withdraw the "NOTIFICATION OF ABANDONMENT" is **GRANTED** since the reply filed on April 29, 2002 to the Notification of Missing Requirements mailed on 28 February 2002 was timely. The NOTIFICATION OF ABANDONMENT, mailed 04 December 2003 has been **VACATED**.

The petition under 37 CFR 1.182 is **GRANTED**.

The application is being returned to the United States Designated/Elected Office (DO/EO/US) for processing in accordance with this decision.

Rafael Bacares
PCT Legal Examiner
PCT Legal Office
Telephone: (703) 308-6312
Facsimile: (703) 308-6459

Leonard Smith
PCT Legal Examiner
PCT Legal Office

UNITED STATES PATENT AND TRADEMARK OFFICE

COMMISSIONER FOR PATENTS
UNITED STATES PATENT AND TRADEMARK OFFICE
P.O. BOX 1450
ALEXANDRIA, VA 22313-1450
www.uspto.gov

Osha Liang LLP
One Houston Center
1221 McKinney Street
Suite 2800
Houston TX 77010

COPY MAILED

AUG 27 2007

OFFICE OF PETITIONS

In re Application of	:
Lebouill, et al.	: DECISION ON APPLICATION
Application No. 10/019,915	: FOR PATENT TERM ADJUSTMENT
Filed: January 2, 2002	:
Atty. Dkt. No: 11345.041001	:

This is a decision on the "REQUEST FOR REINSTATEMENT OF PATENT TERM ADJUSTMENT UNDER 37 C.F.R. § .705," filed January 22, 2007. This matter is being treated under 37 CFR 1.705(b) as an application for patent term adjustment.

The application for patent term adjustment ("PTA") under 37 CFR 1.705(b) is **GRANTED TO THE EXTENT HEREIN INDICATED**. The Office will *sua sponte* adjust the PTA determination to reflect this decision. The proper amount of PTA at the time of the mailing of the notice of allowance is 47 days.

Applicants request that the Determination of Patent Term Adjustment be corrected from 17 days, as indicated on the Determination of Patent Term Adjustment mailed November 21, 2006, to an adjustment of 65 days. Specifically, applicants argue that the adjustment in connection with the mailing of the final Office action on February 20, 2004 should be 146 days rather than 118 days.

A review of the application history reveals that in accordance with 37 CFR 1.702(a)(1), an adjustment of 22 days can be attributed to the Office. The adjustment began March 5, 2003, the day after the day that is 14 months after the date that the application was filed, and ended March 26, 2003, the date that the non-final Office action was mailed. 37 CFR 1.703(a)(1).

A further adjustment of 118 days can be attributed to the Office in accordance with 37 CFR 1.702(a)(2). The adjustment began October 26, 2003, the day after the date that is four months after the date a response to the non-final Office action was received, and ended February 20, 2004, the date that the final Office action was mailed. 37 CFR 1.703(a)(2). The clock

stopping on February 20, 2004 was accurate. A review of the file history reflects that the decision mailed on February 20, 2004 was to the address identified in the Oath. In addition, the file history reflects that the address was not changed to a different correspondence address prior to February 20, 2004. In addition, the file does not reflect the submission of an ADS that would change the correspondence address in the file. Accordingly, the Office met the requirement of 37 CFR 1.702(a)(2)on February 20, 2004 for an accurate delay of 118 days not 146 days requested by applicant.

However, the adjustment of 140 days is properly reduced by 93 days not 123 days in accordance with 37 CFR 1.704(b) in connection with the request for continued examination filed September 20, 2004. The Office reset the time of response for applicant from 2/20/04 until 3/19/2004. Accordingly, the delay was for the period from June 20, 2004 until September 20, 2004.

Therefore at the time the mailing of the notice of allowance of allowance, the application is entitled to an adjustment of 47 days rather than the indicated amount of 17 days.

Applicants' deposit account has been charged the $200.00 application fee, as authorized.

The patent term adjustment indicated in the issue notification letter that is mailed to applicant approximately three weeks prior to issuance will include any additional patent term accrued pursuant to §§ 1.702(a)(4) and 1.702(b).

The application file is being forwarded to the Publications Division for issuance of a patent.

Telephone inquiries specific to this matter should be directed to Petitions Attorney Alesia M. Brown at (571) 272-3205.

Kery A Fries

Kery Fries
Senior Legal Advisor
Office of Patent Legal Administration
Office of Deputy Commissioner
for Patent Examination Policy

Day : Monday
Date: 7/23/2007

PALM INTRANET

Time: 11:16:05

PTA Calculations for Application: 10/019915

Application Filing Date:	01/04/2002	PTO Delay (PTO):	140
Issue Date of Patent:		Three Years:	0
Pre-Issue Petitions:	0	Applicant Delay (APPL):	123
Post-Issue Petitions:	0	Total PTA (days):	47
PTO Delay Adjustment:	30		

File Contents History

Number	Date	Contents Description	PTO	APPL	START
94	07/23/2007	ADJUSTMENT OF PTA CALCULATION BY PTO	30		
78	11/21/2006	MAIL NOTICE OF ALLOWANCE			
77	11/18/2006	ISSUE REVISION COMPLETED			
76	11/18/2006	NOTICE OF ALLOWANCE DATA VERIFICATION COMPLETED			
75	11/17/2006	NOTICE OF ALLOWABILITY			
74	09/21/2006	DATE FORWARDED TO EXAMINER			
73	09/13/2006	RCE- AF PROCESSED			
72	09/21/2006	DATE FORWARDED TO EXAMINER			
71	09/13/2006	REQUEST FOR CONTINUED EXAMINATION (RCE)			
70	09/21/2006	DISPOSAL FOR A RCE/CPA/129 (EXPRESS ABANDONMENT IF CPA)			
69	09/13/2006	WORKFLOW - REQUEST FOR RCE - BEGIN			
68	08/21/2006	MAIL ADVISORY ACTION (PTOL - 303)			
67	08/21/2006	MAIL EXAMINER INTERVIEW SUMMARY (PTOL - 413)			
66	08/17/2006	EXAMINER INTERVIEW SUMMARY RECORD (PTOL - 413)			
65	08/18/2006	ADVISORY ACTION (PTOL-303)			
64	08/16/2006	DATE FORWARDED TO EXAMINER			
63	08/09/2006	AMENDMENT AFTER FINAL REJECTION			
62	06/15/2006	MAIL FINAL REJECTION (PTOL - 326)			
61	06/12/2006	FINAL REJECTION			
60	03/31/2006	DATE FORWARDED TO EXAMINER			
59	03/22/2006	RESPONSE AFTER NON-FINAL ACTION			
58	12/27/2005	MAIL NON-FINAL REJECTION			

57	12/22/2005	NON-FINAL REJECTION			
56	08/19/2005	MISCELLANEOUS INCOMING LETTER			
55	10/14/2005	DATE FORWARDED TO EXAMINER			
54	09/29/2005	AMENDMENT SUBMITTED/ENTERED WITH FILING OF CPA/RCE			
53	10/14/2005	DATE FORWARDED TO EXAMINER			
52	09/29/2005	REQUEST FOR CONTINUED EXAMINATION (RCE)			
51	10/14/2005	DISPOSAL FOR A RCE/CPA/129 (EXPRESS ABANDONMENT IF CPA)			
50	10/13/2005	CASE DOCKETED TO EXAMINER IN GAU			
49	09/29/2005	WORKFLOW - REQUEST FOR RCE - BEGIN			
48	09/30/2005	MAIL EXAMINER INTERVIEW SUMMARY (PTOL - 413)			
47	09/29/2005	EXAMINER INTERVIEW SUMMARY RECORD (PTOL - 413)			
46	08/01/2005	MAIL FINAL REJECTION (PTOL - 326)			
45	07/28/2005	FINAL REJECTION			
44	06/02/2005	DATE FORWARDED TO EXAMINER			
43	04/14/2005	RESPONSE AFTER NON-FINAL ACTION			
42	01/18/2005	MAIL NON-FINAL REJECTION			
41	12/23/2004	NON-FINAL REJECTION			
40	10/21/2004	IFW TSS PROCESSING BY TECH CENTER COMPLETE			
39	01/04/2002	REFERENCE CAPTURE ON IDS			
38	10/21/2004	DATE FORWARDED TO EXAMINER			
37	09/20/2004	REQUEST FOR CONTINUED EXAMINATION (RCE)		123	18
36	10/21/2004	DISPOSAL FOR A RCE/CPA/129 (EXPRESS ABANDONMENT IF CPA)			
35	09/20/2004	REQUEST FOR EXTENSION OF TIME - GRANTED			
34	09/20/2004	AFFIDAVIT(S) (RULE 131 OR 132) OR EXHIBIT(S) RECEIVED			
33	01/04/2002	REQUEST FOR FOREIGN PRIORITY (PRIORITY PAPERS MAY BE INCLUDED)			
32	01/04/2002	INFORMATION DISCLOSURE STATEMENT (IDS) FILED			
31	09/20/2004	WORKFLOW INCOMING AMENDMENT IFW			
30	09/20/2004	WORKFLOW - REQUEST FOR RCE - BEGIN			

29	07/16/2004	CASE DOCKETED TO EXAMINER IN GAU			
28	07/02/2004	MAIL ADVISORY ACTION (PTOL - 303)			
27	06/29/2004	ADVISORY ACTION (PTOL-303)			
26	06/25/2004	DATE FORWARDED TO EXAMINER			
25	05/19/2004	AMENDMENT AFTER FINAL REJECTION			
24	05/19/2004	WORKFLOW INCOMING AMENDMENT IFW			
23	03/19/2004	MAIL NOTICE OF RESTARTED RESPONSE PERIOD			
22	03/19/2004	LETTER RESTARTING PERIOD FOR RESPONSE (I.E. LETTER RE: REFERENCES)			
21	03/19/2004	CORRESPONDENCE ADDRESS CHANGE			
20	03/19/2004	CORRESPONDENCE ADDRESS CHANGE			
19	03/19/2004	CORRESPONDENCE ADDRESS CHANGE			
18	02/20/2004	MAIL FINAL REJECTION (PTOL - 326)	118		15
17	02/17/2004	FINAL REJECTION			
16	12/08/2003	DATE FORWARDED TO EXAMINER			
15	06/25/2003	RESPONSE AFTER NON-FINAL ACTION			
14	12/08/2003	MAIL NOTICE OF RESCINDED ABANDONMENT			
13	12/05/2003	NOTICE OF RESCINDED ABANDONMENT IN TCS			
12	11/05/2003	MAIL ABANDONMENT FOR FAILURE TO RESPOND TO OFFICE ACTION			
11	11/05/2003	ABANDONMENT FOR FAILURE TO RESPOND TO OFFICE ACTION			
10	03/26/2003	MAIL NON-FINAL REJECTION	22		-1
9	03/24/2003	NON-FINAL REJECTION			
8	01/04/2002	PRELIMINARY AMENDMENT			
7	03/11/2003	CASE DOCKETED TO EXAMINER IN GAU			
6	11/12/2002	CASE DOCKETED TO EXAMINER IN GAU			
5	10/31/2002	CASE DOCKETED TO EXAMINER IN GAU			
4	02/27/2002	IFW SCAN & PACR AUTO SECURITY REVIEW			
3	02/21/2002	APPLICATION DISPATCHED FROM OIPE			
2	02/21/2002	NOTICE OF DO/EO ACCEPTANCE MAILED			
1	01/04/2002	INITIAL EXAM TEAM NN			

Search Another: Application# [ ] Search

EXPLANATION OF PTA CALCULATION

EXPLANATION OF PTE CALCULATION

RECEIVED
CENTRAL FAX CENTER
JAN 2 2 2007

Docket No.: 11345/041001
(PATENT)

IN THE UNITED STATES PATENT AND TRADEMARK OFFICE

In re Patent Application of:
Gilles Lebouill

22511
PATENT TRADEMARK OFFICE

Application No.: 10/019,915

Confirmation No.: 1462

Filed: January 4, 2002

Art Unit: 2145

For: INTERNET SUBSCRIBER MANAGEMENT

Examiner: P. L. Winder

REQUEST FOR REINSTATEMENT OF
PATENT TERM ADJUSTMENT UNDER 37 C.F.R. § .705

MS Issue Fee
Commissioner for Patents
P.O. Box 1450
Alexandria, VA 22313-1450

Dear Sir:

In response to the Notice of Allowance dated November 21, 2006, showing a Patent Term Adjustment (PTA) of 17 days, the Applicant(s) hereby requests reinstatement of a PTA of 65 days, and in support of this Request submits the following:

1. A copy of the Notice of Allowance dated November 21, 2006, which shows a PTA of 17 days.

207185_1

RECEIVED
CENTRAL FAX CENTER
JAN 2 2 2007

REMARKS

Please reinstate a PTA of 65 days for this patent application in view of the above supporting documentation and the following remarks.

Total USPTO delays during the prosecution of the referenced case amount to 168 days. Particularly, there was a 22 day delay in the issuance of the first Office Action for the referenced case, and a 146 day delay between the time of Applicant's response to the Office Action dated March 26, 2003, mailed June 25, 2003, and the issuance of a final Office Action, mailed on March 19, 2004. The 168 days in PTO delays is lessened by 103 days of Applicant delays in filing a Request for Continued Examination after an Advisory Action. Thus, Applicant asserts that the PTA for the referenced case should be 65 days, rather than the 17 days allotted in the enclosed Notice of Allowance.

Applicant(s) believes that this Request is fully responsive and requests reinstatement of 65 days to the term of their patent. Applicant(s) believes no fee is due with this Request. However, if a fee is due, please charge our Deposit Account No. 50-0591, under Order No. 11345/041001, from which the undersigned is authorized to draw.

Applicant(s) believes this Request is fully responsive to all outstanding issues and places this application in condition for allowance. If this belief is incorrect or other issues arise, the Examiner is encouraged to contact the undersigned or his associates at the telephone number listed below. Please apply any charges not covered, or any credits, to Deposit Account 50-0591,

PAGE 4/12 * RCVD AT 1/22/2007 4:34:40 PM [Eastern Standard Time] * SVR:USPTO-EFXRF-5/17 * DNIS:2738300 * CSID:7132288778 * DURATION (mm-ss):02-36

BEST AVAILABLE COPY

Application No.: 10/019,915 Docket No.: 11345/041001

under Order No. 11345/041001, from which the undersigned is authorized to draw.

Dated: January 22, 2007

Respectfully submitted,

By #45,079

Jonathan P. Osha TELEW AS SCHERER
Registration No.: 33,986
OSHA · LIANG LLP
1221 McKinney St., Suite 2800
Houston, Texas 77010
(713) 228-8600
(713) 228-8778 (Fax)
Attorney for Applicant

Attachments (Copy of Notice of Allowance)

PAGE 5/12 * RCVD AT 1/22/2007 4:34:40 PM [Eastern Standard Time] * SVR:USPTO-EFXRF-5/17 * DNIS:2738300 * CSID:7132288778 * DURATION (mm-ss):02-38

BEST AVAILABLE COPY

RECEIVED
CENTRAL FAX CENTER
JAN 2 2 2007

Docket No.: 11345/041001
(PATENT)

IN THE UNITED STATES PATENT AND TRADEMARK OFFICE

In re Patent Application of:
Gilles Lebouill

22511
PATENT TRADEMARK OFFICE

Application No.: 10/019,915

Confirmation No.: 1462

Filed: January 4, 2002

Art Unit: 2145

For: INTERNET SUBSCRIBER MANAGEMENT

Examiner: P. L. Winder

REQUEST FOR REINSTATEMENT OF
PATENT TERM ADJUSTMENT UNDER 37 C.F.R. § .705

MS Issue Fee
Commissioner for Patents
P.O. Box 1450
Alexandria, VA 22313-1450

Dear Sir:

In response to the Notice of Allowance dated November 21, 2006, showing a Patent Term Adjustment (PTA) of 17 days, the Applicant(s) hereby requests reinstatement of a PTA of 65 days, and in support of this Request submits the following:

1. A copy of the Notice of Allowance dated November 21, 2006, which shows a PTA of 17 days.

207185_1

RECEIVED
CENTRAL FAX CENTER
JAN 2 2 2007

REMARKS

Please reinstate a PTA of 65 days for this patent application in view of the above supporting documentation and the following remarks.

Total USPTO delays during the prosecution of the referenced case amount to 168 days. Particularly, there was a 22 day delay in the issuance of the first Office Action for the referenced case, and a 146 day delay between the time of Applicant's response to the Office Action dated March 26, 2003, mailed June 25, 2003, and the issuance of a final Office Action, mailed on March 19, 2004. The 168 days in PTO delays is lessened by 103 days of Applicant delays in filing a Request for Continued Examination after an Advisory Action. Thus, Applicant asserts that the PTA for the referenced case should be 65 days, rather than the 17 days allotted in the enclosed Notice of Allowance.

Applicant(s) believes that this Request is fully responsive and requests reinstatement of 65 days to the term of their patent. Applicant(s) believes no fee is due with this Request. However, if a fee is due, please charge our Deposit Account No. 50-0591, under Order No. 11345/041001, from which the undersigned is authorized to draw.

Applicant(s) believes this Request is fully responsive to all outstanding issues and places this application in condition for allowance. If this belief is incorrect or other issues arise, the Examiner is encouraged to contact the undersigned or his associates at the telephone number listed below. Please apply any charges not covered, or any credits, to Deposit Account 50-0591,

PAGE 4/12 * RCVD AT 1/22/2007 4:34:40 PM [Eastern Standard Time] * SVR:USPTO-EFXRF-5/17 * DNIS:2738300 * CSID:7132288778 * DURATION (mm-ss):02-36

BEST AVAILABLE COPY

Application No.: 10/019,915 Docket No.: 11345/041001

under Order No. 11345/041001, from which the undersigned is authorized to draw.

Dated: January 22, 2007

Respectfully submitted,

By #45,079

Jonathan P. Osha TELEW AS SCHERER
Registration No.: 33,986
OSHA · LIANG LLP
1221 McKinney St., Suite 2800
Houston, Texas 77010
(713) 228-8600
(713) 228-8778 (Fax)
Attorney for Applicant

Attachments (Copy of Notice of Allowance)

PAGE 5/12 * RCVD AT 1/22/2007 4:34:40 PM [Eastern Standard Time] * SVR:USPTO-EFXRF-5/17 * DNIS:2738300 * CSID:7132288778 * DURATION (mm-ss):02-36

BEST AVAILABLE COPY

MAR 2 6 2002

UNITED STATES PATENT AND TRADEMARK OFFICE

COMMISSIONER FOR PATENTS
UNITED STATES PATENT AND TRADEMARK OFFICE
WASHINGTON, D.C. 20231
www.uspto.gov

John J. Gresens
Merchant & Gould
P.O. Box 2903
Minneapolis, MN 55402-0903

In re Application of	:	
VALLI, Seppo	:	
Application No.: 10/019,922	:	
PCT No.: PCT/FI00/00586	:	DECISION ON PETITION
Int. Filing Date: 28 June 2000	:	UNDER 37 CFR 1.137(b)
Priority Date: 28 June 1999	:	
Attorney Docket No.: 7510.197USWO	:	
For: PROCEDURE AND SYSTEM FOR	:	
PERFORMING MOTION ESTIMATION	:	

The petition to revive under 37 CFR 1.137(b) filed 31 December 2001 in the above-captioned application is hereby **GRANTED** as follows:

Applicant's statement that the "the entire delay in filing the required reply from the due date for the reply until the filing of a grantable petition under 37 CFR 1.137(b) was unintentional" meets the requirements of 37 CFR 1.137(b)(3).

A review of the application file reveals that applicants have now submitted the basic national fee of $1040 and the requirements of 37 CFR 1.137(b) have been satisfied. Therefore, the request to revive the application abandoned under 35 U.S.C. 371(d) is granted as to the National stage in the United States of America.

This application is being forwarded to the United States Designated/Elected Office (US/DO/EO) for continued processing including the issuance of a Notification of Missing Requirements (Form PCT/DO/EO/905) indicating that an oath or declaration along with the $130 surcharge for filing the oath or declaration after the thirty-month period is required.

Anthony Smith

Anthony Smith
Attorney-Advisor
PCT Legal Office
Telephone: (703) 308-6314
Facsimile: (703) 308-6459

UNITED STATES PATENT AND TRADEMARK OFFICE

COMMISSIONER FOR PATENTS
UNITED STATES PATENT AND TRADEMARK OFFICE
P.O. BOX 1450
ALEXANDRIA, VA 22313-1450
www.uspto.gov

FOLEY AND LARDNER LLP
SUITE 500
3000 K STREET NW
WASHINGTON DC 20007

COPY MAILED

MAR 16 2009

OFFICE OF PETITIONS

In re Application of :
Samain, et al. : LETTER REGARDING PTA
Application No. 10/019,954 :
Filed: May 24, 2002 :
Atty. Dkt. No.: 065691-0267 :

This letter is in response to the "COMMUNICATION REGARDING PATENT TERM ADJUSTMENT," filed January 28, 2009. The Office thanks applicants for their good faith and candor in bringing this to our attention.

The Determination of Patent Term Adjustment mailed October 30, 2008 indicated that the above-identified application was entitled to a patent term adjustment ("PTA") of 57 days. Applicants indicate that this adjustment disagrees with applicants' own calculation of adjustment.

The correct Patent Term Adjustment ("PTA") at the time of the allowance is 54 days.

A review of the record reveals that the adjustment of 435 days and the reductions of 378 days accorded at the time of allowance are proper.

However, further review of the record reveals that the Office failed to assess a reduction of three days in connection with the July 11, 2008 submission. In accordance with 37 CFR 1.704(c)(8), reduction commenced July 9, 2008, the day after the date that the initial response to the non-final Office action was filed, and ended July 11, 2008, the date that the supplemental reply was filed.

Accordingly, at the time of allowance, the application is entitled to an adjustment of 54 days (adjustment totalling 435 days less reductions totalling 381 days).

As applicants are advising us of a potential error in providing too much patent term adjustment in this application, no fee is due in connection with this matter.

The patent term adjustment indicated in the patent will include any additional patent term accrued pursuant to §§ 1.702(a)(4) and 1.702(b).

This application is being forward to the Office of Data Management for issuance of the patent.

Telephone inquiries specific to this decision should be directed to the Alesia M. Brown at (571) 272-3205.

Kery A. Fries

Kery Fries
Senior Patent Attorney
Office of Patent Legal Administration
Office of Deputy Commissioner
for Patent Examination Policy

Enclosure: Copy of Adjustment PAIR Calculation

Day : Monday
Date: 3/16/2009

PALM INTRANET

Time: 11:42:07

PTA Calculations for Application: 10/019954			
Application Filing Date:	05/24/2002	PTO Delay (PTO):	435
Issue Date of Patent:		Three Years:	0
Pre-Issue Petitions:	0	Applicant Delay (APPL):	378
Post-Issue Petitions:	0	Total PTA (days):	54
PTO Delay Adjustment:	-3		

File Contents History

Number	Date	Contents Description	PTO	APPL	START
83	03/16/2009	ADJUSTMENT OF PTA CALCULATION BY PTO		3	
74	10/30/2008	MAIL NOTICE OF ALLOWANCE			
73	10/28/2008	ISSUE REVISION COMPLETED			
72	10/28/2008	DOCUMENT VERIFICATION			
71	10/14/2008	NOTICE OF ALLOWANCE DATA VERIFICATION COMPLETED			
70	10/14/2008	CASE DOCKETED TO EXAMINER IN GAU			
69	10/14/2008	EXAMINER'S AMENDMENT COMMUNICATION			
68	10/14/2008	NOTICE OF ALLOWABILITY			
67	08/28/2008	MISCELLANEOUS INCOMING LETTER			
66	08/14/2008	CRF IS GOOD TECHNICALLY / ENTERED INTO DATABASE			
65	07/11/2008	MISCELLANEOUS INCOMING LETTER			
64	07/11/2008	AFFIDAVIT(S) (RULE 131 OR 132) OR EXHIBIT(S) RECEIVED			
63	07/08/2008	REQUEST FOR FOREIGN PRIORITY (PRIORITY PAPERS MAY BE INCLUDED)			
62	07/08/2008	AFFIDAVIT(S) (RULE 131 OR 132) OR EXHIBIT(S) RECEIVED			
61	07/28/2008	DATE FORWARDED TO EXAMINER			
60	07/08/2008	RESPONSE AFTER NON-FINAL ACTION		90	58
59	07/08/2008	REQUEST FOR EXTENSION OF TIME - GRANTED			
58	01/09/2008	MAIL NON-FINAL REJECTION			
57	01/07/2008	NON-FINAL REJECTION			
56	10/25/2007	DATE FORWARDED TO EXAMINER			
55	10/18/2007	RESPONSE AFTER NON-FINAL ACTION		61	53
		REQUEST FOR EXTENSION OF TIME - GRANTED			

54	10/18/2007				
53	05/18/2007	MAIL NON-FINAL REJECTION			
50	05/14/2007	NON-FINAL REJECTION			
49	03/12/2007	DATE FORWARDED TO EXAMINER			
48	02/28/2007	AMENDMENT SUBMITTED/ENTERED WITH FILING OF CPA/RCE			
47	03/12/2007	DATE FORWARDED TO EXAMINER			
46	02/28/2007	REQUEST FOR CONTINUED EXAMINATION (RCE)		92	37
45	03/12/2007	DISPOSAL FOR A RCE/CPA/129 (EXPRESS ABANDONMENT IF CPA)			
44	02/28/2007	REQUEST FOR EXTENSION OF TIME - GRANTED			
43	02/28/2007	WORKFLOW - REQUEST FOR RCE - BEGIN			
42	01/31/2007	MAIL ADVISORY ACTION (PTOL - 303)			
41	01/29/2007	ADVISORY ACTION (PTOL-303)			
40	01/16/2007	DATE FORWARDED TO EXAMINER			
39	12/28/2006	AMENDMENT AFTER FINAL REJECTION			
38	12/28/2006	REQUEST FOR EXTENSION OF TIME - GRANTED			
37	08/28/2006	MAIL FINAL REJECTION (PTOL - 326)			
36	08/21/2006	FINAL REJECTION			
35	06/05/2006	DATE FORWARDED TO EXAMINER			
34	05/30/2006	RESPONSE AFTER NON-FINAL ACTION		62	32
33	05/30/2006	REQUEST FOR EXTENSION OF TIME - GRANTED			
32	12/29/2005	MAIL NON-FINAL REJECTION			
31	01/05/2006	NON-FINAL REJECTION			
28	10/13/2005	DATE FORWARDED TO EXAMINER			
27	10/05/2005	RESPONSE AFTER NON-FINAL ACTION		61	25
26	10/05/2005	REQUEST FOR EXTENSION OF TIME - GRANTED			
25	05/05/2005	MAIL NON-FINAL REJECTION			
24	05/03/2005	NON-FINAL REJECTION			
23	02/23/2005	DATE FORWARDED TO EXAMINER			
22	01/13/2005	RESPONSE TO ELECTION / RESTRICTION FILED		12	18
21	01/13/2005	REQUEST FOR EXTENSION OF TIME - GRANTED			
19	01/13/2005	WORKFLOW INCOMING AMENDMENT IFW			

18	10/01/2004	MAIL RESTRICTION REQUIREMENT	435		-1
17	09/30/2004	REQUIREMENT FOR RESTRICTION / ELECTION			
16	03/20/2004	CASE DOCKETED TO EXAMINER IN GAU			
15	02/12/2004	IFW TSS PROCESSING BY TECH CENTER COMPLETE			
14.7	05/24/2002	INFORMATION DISCLOSURE STATEMENT (IDS) FILED			
14	05/24/2002	INFORMATION DISCLOSURE STATEMENT (IDS) FILED			
13	04/03/2003	CASE DOCKETED TO EXAMINER IN GAU			
12	09/10/2002	APPLICATION DISPATCHED FROM OIPE			
11	09/06/2002	IFW SCAN & PACR AUTO SECURITY REVIEW			
10	09/04/2002	NOTICE OF DO/EO ACCEPTANCE MAILED			
9	05/24/2002	ADDITIONAL APPLICATION FILING FEES			
8	05/24/2002	INFORMATION DISCLOSURE STATEMENTS			
7	05/24/2002	PRELIMINARY AMENDMENTS			
6	05/24/2002	A STATEMENT BY ONE OR MORE INVENTORS SATISFYING THE REQUIREMENT UNDER 35 USC 115, OATH OF THE APPLIC			
5	05/24/2002	DRAWING PRELIMINARY AMENDMENT			
4	05/24/2002	TRANSLATION OF THE INTERNATIONAL APPLICATION INTO ENGLISH			
3	05/24/2002	TRANSLATION OF THE INTERNATIONAL APPLICATION INTO ENGLISH			

Search Another: Application# [ ] Search

EXPLANATION OF PTA CALCULATION

EXPLANATION OF PTE CALCULATION

To go back, right click here and select Back. To go forward, right click here and select Forward. To refresh, right click here and select Refresh.

Back to OASIS | Home page

UNITED STATES PATENT AND TRADEMARK OFFICE

COMMISSIONER FOR PATENTS
UNITED STATES PATENT AND TRADEMARK OFFICE
P.O. BOX 1450
ALEXANDRIA, VA 22313-1450
www.uspto.gov

APR 14 2004

DAVID J. LEVY
CORPORATE INTELLEECTUAL PROPERTY
GLAXOSMITHKLINE
FIVE MOORE DRIVE
P. O. BOX 13398
RESEARCH TRIANGLE, NC 27709-3398

In re Application of	:
Eric C. Bigham et al	:
Serial No.: 10/019,976	: PETITION DECISION
Filed: October 23, 2001	:
Attorney Docket No.: PU3650USw	:

This is in response to the petition under 37 CFR 1.144, filed October 28, 2003, requesting withdrawal of an improper restriction requirement. The delay in acting o this petition is regretted, but was occasioned by scanning requirements and Office moves.

BACKGROUND

A review of the file history shows that this application was filed under 35 U.S.C. 371 and accepted on October 23, 2001, and contained claims 1-29, as filed. By preliminary amendment concurrently filed claims 18 and 21-23 were deleted. In a first Office action, mailed April 25, 2003, the examiner set forth a restriction requirement under 35 U.S.C. 121, as follows:

> Group I – Claims 1-13 and 19-20, drawn to compounds and compositions of formula 1;
> Group II – Claims 14-17, drawn to a method of treating a disease or condition;
> Group III – Claims 24-29, drawn to a process of preparing the compound of formula 1.

The examiner reasoned that the compounds/compositions were independent and distinct from the method of using and method of preparing them, setting forth appropriate reasoning under 35 U.S.C. 121. The examiner further required an election of species within whichever Group was elected. Pursuant to a telephone interview applicants provisionally elected Group I and the species set forth in Claim 13 for examination. The examiner then examined the species and finding it allowable defined a genus or subgenus within the claim based on the species elected. Having done this the examiner then objected to the claims as containing non-elected species and required cancellation thereof.

Applicants replied on June 19, 2003, confirming the election of Group I and the species of claim 13. Applicants strenuously traversed the restriction requirement on the basis that it is improper for the examiner to determine what applicants' invention is based on the election of a species and the examiner's construction of a genus or subgenus based thereon. Primarily argued was the procedures outlined in M.P.E.P. 802.03 relating to an election of species when the species is found allowable and that the examiner has not followed the directions therein.

The examiner then mailed a Final Office action to applicants on September 15, 2003, responding to applicants' traversal, but maintaining the requirement for the same reasons as previously set forth. The examiner again objected to the non-elected subject matter in the claims and requested cancellation thereof and made the Office action Final.

Applicants replied by filing this petition which presents the same points of argument as presented in reply to the first Office action in a somewhat expanded form.

DISCUSSION

The application was filed with claims directed to the structure of Formula (I):

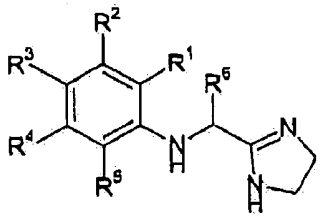

The examiner and applicants are both in error with respect to requiring restriction under 35 U.S.C. 121 in this application inasmuch as this application was filed and accepted under 35 U.S.C. 371. In view of this National Stage filing of PCT/EP00/03848, only Unity of Invention rules apply with respect to examination of the claims. Unity of Invention requires an examiner to determine the special technical feature which is found in all of the compounds/compositions claimed and base examination thereon. If no special technical feature is found which makes a contribution over the art then Unity does not exist. Within a Markush type claim, as here, Unity may not exist on the basic structure (Formula I as shown above absent each of the variables) common to all of the compounds, but there may be several different structures which may form the basis for multiple limited Unity of Invention holdings based on the common structure above and one or more radicals attached thereto. That appears to be the case here based on the determination that a species which has been examined is free of the prior art. A requirement for election under Lack of Unity standards does not permit an election of species requirement. However, for purposes of beginning examination an examiner may request and applicants may suggest a particular species from which to start examination.

Further, according to PCT Rule 13.1 a method of making and a method of using a compound/composition are considered to have Unity with the compound/composition found to be free of the prior art.

In view of the error in prosecution of this application by requiring restriction under 35 U.S.C. 121 rather than under 35 U.S.C. 371 and 37 CFR 1.499, **all prior Office actions are vacated** and the application will be returned to the examiner for proper consideration of Lack of Unity and further prosecution.

DECISION

The petition is **GRANTED.**

The application will be forwarded to the examiner for further action not inconsistent with this decision.

Should there be any questions about this decision please contact William R. Dixon, Jr., by letter addressed to Director, TC 1600, at the address listed above, or by telephone at 571-272-0519 or by facsimile sent to the general Office facsimile number, 703-872-9306.

Jasenia C. Chambers for

Bruce M. Kisliuk
Director, Technology Center 1600

UNITED STATES PATENT AND TRADEMARK OFFICE

UNITED STATES DEPARTMENT OF COMMERCE
United States Patent and Trademark Office
Address: COMMISSIONER FOR PATENTS
P.O. Box 1450
Alexandria, Virginia 22313-1450
www.uspto.gov

3COM CORPORATION
350 CAMPUS DRIVE
MARLBOROUGH, MA 01752-3064

Mail Date: 04/23/2010

Applicant	: Brian Evan McGinnis	: DECISION ON REQUEST FOR
Patent Number	: 7603408	: RECALCULATION of PATENT
Issue Date	: 10/13/2009	: TERM ADJUSTMENT IN VIEW
Appliction No	: 10/019,988	: OF WYETH
Filed	: 07/24/2002	:
		:

The Patentee's Request for Recalculation is **DISMISSED.**

This Request is deemed ineligible for consideration for one or more of the following reasons:

(A). The patent for which PTA recalculation is requested is either a design or reissue application or is a reexamination proceeding;

(B). The patent for which PTA recalculation is requested resulted from a utility or plant application filed under 35 USC 111(a) before May 29, 2000 and no CPA filed in the application on/after May 29, 2000;

(C). The patent for which PTA recalculation is requested resulted from an international application in which the international filing date was before May 29, 2000 and no CPA filed in the application on/after May 29, 2000;

(D). The patent for which PTA recalculation is requested issued on/after March 2, 2010;

(E). The Request for Recalculation was filed more than 180 days after the grant date of the patent and the request was not filed within two months of a dismissal of a request for reconsideration of the of the patent term under 37 CFR 1.705(d);

(F). The Request for Recalculation is not solely limited to USPTO pre-Wyeth interpretation of 35 U.S.C. 154(b)(2)(A);

or

(G). A civil action was filed pursuant to 35 U.S.C. 154(b)(4)(A)concerning the same patent at issue in this request.

Patentee may file a reply to this decision dismissing the Request for Recalculation. Patentee must file such reply within one month or thirty days, whichever is longer, of the mail date of the decision dismissing the Request for Recalculation. No fee is required if patentee is asserting in the reply that the dismissal for ineligibility is improper.

Patentee should use document code PET.OP if electronically filing a reply to this dismissal. If the USPTO finds that the request was improperly deemed ineligible, the USPTO will mail applicant a recalculation determination.

Patentee should be aware that in order to preserve the right to review in the United States District Court for the District of Columbia of the USPTO patent term adjustment determination, patentee must ensure that he or she also take the steps required under 35 U.S.C. 154(b)(4)(A). Nothing in the request for recalculation should be construed as providing an alternative time frame for commencing a civil action under 35 U.S.C. 154 (b)(4)(A).

Any questions concerning this decision should be directed to the Office of Patent Legal Administration at 571-272-7702.

14 NOV 200

UNITED STATES PATENT AND TRADEMARK OFFICE

COMMISSIONER FOR PATENTS
UNITED STATES PATENT AND TRADEMARK OFFICE
WASHINGTON, D.C. 20231
www.uspto.gov

#3

Guy D. Yale
ALIX, YALE & RISTAS, L.L.P.
750 Main Street
Hartford, Connecticut 06103-2721

In re Application of	:	
Christopher John Andrew BARNARDO, et al.	:	
Application No.: 10/019,991	:	DECISION
PCT No.: PCT/EP00/04652	:	ON PETITION
Int. Filing Date: 22 May 2000	:	UNDER 27 CFR 1.182
Priority Date: 20 May 1999	:	
Attorney Docket No.: DHN/319/PC/US	:	
For: ELECTROLUMINISCENT DISPLAY	:	

This decision is in response to the "REQUEST TO RECONSIDER AND RESCIND NOTICE OF ABANDONMENT, OR IN THE ALTERNATIVE, PETITION TO REVIVE ABANDONED PATENT APPLICATION AND REQUEST FOR FILING FEE CREDIT OR REFUND" filed 08 April 2002 in the above-captioned application.

BACKGROUND

On 22 May 2000, applicants filed international application PCT/EP00/04652, which claimed priority of an earlier British application filed 20 May 1999. A copy of the international application was communicated to the United States Patent and Trademark Office from the International Bureau on 30 November 2000. A Demand for international preliminary examination, in which the United States was elected, was filed on 04 December 2000, prior to the expiration of nineteen months from the priority date. Accordingly, the thirty-month period for paying the basic national fee to enter the national stage in the United States expired at midnight on 20 November 2001.

On 20 November 2001, applicants filed papers for entry into the national stage in the United States under 35 U.S.C. 371. Filed with the Transmittal Letter were, inter alia, the requisite basic national fee and the description and claims as required by 35 U.S.C. 371(c)(1) and (2). However, the Transmittal Letter erroneously identified the international application as PCT/EP00/04270.

On 09 January 2002, the United States Designated/Elected Office (DO/EO/US) mailed a Notification of Abandonment (Form PCT/DO/EO/909), which informed applicants that the application became abandoned as to the United States because "Applicant has failed to provide the Copy of the International Application by 30 months...".

On 18 June 2002, the United States Designated/Elected Office (DO/EO/US) mailed a Notice of Cancellation of Assigned Serial Number (Form PCT/DO/EO/908), informing applicants that the national stage of PCT/EP00/004270 had been assigned serial number 09/979,291. As a result, all the papers filed 20 November 2001 have been matched with serial number 09/979,291.

On 08 April 2002, applicants filed the present petition confirming the clerical mistake made in the Transmittal Letter with regard to the identification of the international application. Applicants petition the Office either to rescind the Notice of Abandonment, or, in the alternative, to revive the application.

DISCUSSION

A review of the application file reveals that the description and claims for PCT/EP00/04652 were submitted on 20 November 2001. Accordingly, the Notification of Abandonment of 09 January 2002 was mailed in error and is hereby VACATED.

A further review of the application papers submitted 20 November 2001 reveals that the cover letter submitting the national stage papers improperly identified the international application as PCT/EP00/04270, and therefore, caused the Office to issue the Form PCT/DO/EO/908 of 18 June 2002 and to match the papers filed 20 November 2001 with serial number 09/979,291, which is the national stage application of PCT/EP00/04270.

Since all the application papers submitted 20 November 2001, except for the cover letter, reference the correct PCT application number, namely PCT/EP00/04652, and, as pointed out by applicants, the error in the indication of the international application number is an applicant-initiated error, applicants' request to accept the application is granted in view of the fact that, although the PCT number was erroneous, the title of the invention, the inventors' names, the International Filing Date all matched the correct international application, namely PCT/EP00/04652. Applicants' request has being treated as a petition under 37 CFR 1.182 to correct the PCT application identified on the cover letter of 20 November 2001 from PCT/EP00/04270 to PCT/EP00/04652 and to re-assign serial number 10/019,991 to the present application.

Applicants are hereby notified that the $130.00 petition fee required under 37 CFR 1.17(h) has been charged to Deposit Account No. 16-2563 as authorized in the petition.

DECISION

In view of the discussion above, the petition under 37 CFR 1.182 is GRANTED. Applicants should use serial number 10/019,991 for all future correspondence pertaining to the national stage of international application PCT/EP00/04652.

The application is being returned to the DO/EO/US for further processing.

Leonard E. Smith
PCT Legal Examiner
PCT Legal Office

Nguyên Ngoc-Hô
Paralegal Specialist
PCT Legal Office

NNH/LES:hn

Tel: (703) 308-6508

UNITED STATES PATENT AND TRADEMARK OFFICE

COMMISSIONER FOR PATENTS
UNITED STATES PATENT AND TRADEMARK OFFICE
P.O. BOX 1450
ALEXANDRIA, VA 22313-1450
www.uspto.gov

PHILIPS INTELLECTUAL PROPERTY & STANDARDS
P.O. BOX 3001
BRIARCLIFF MANOR NY 10510

COPY MAILED
JAN 22 2007
OFFICE OF PETITIONS

In re Application of :
Pessolano, et al. : DECISION ON PETITION
Application No. 10/020,019 :
Filed: December 7, 2001 :
Docket No.: NL 000667 :

This is a decision on the petition under 37 C.F.R. § 1.137(b), filed November 13, 2006, to revive the above-identified application.

The petition is **GRANTED**.

This application became abandoned for failure to timely reply to the non-final Office action mailed December 19, 2005. The Notice set a three (3) month shortened statutory period of time for reply. No extensions of time in accordance with 37 C.F.R. § 1.136 were timely requested. Notice of Abandonment was mailed September 14, 2006

A grantable petition pursuant to 37 C.F.R. § 1.137(b) must be accompanied by: (1) the required reply to the outstanding Office action or notice, unless previously filed; (2) the petition fee as set forth in 37 C.F.R. § 1.17(m); (3) a statement that the entire delay in filing the required reply from the due date for the reply until the filing of a grantable petition pursuant to 37 C.F.R. § 1.137(b) was unintentional; and (4) any terminal disclaimer (and fee set forth in 37 C.F.R. § 1.20(d)) required pursuant to 37 C.F.R. § 1.137(c).

The instant petition has been reviewed and found in compliance with the provisions of 37 C.F.R. § 1.137(b). Accordingly, the failure to timely submit a proper reply to the non-final Office action is accepted as having been unintentionally delayed.

There is no indication in the record that practitioner herein has been empowered to represent applicant. Accordingly, all future correspondence concerning this application will be directed to the correspondence address of record until such time

as appropriate instruction and documentation is submitted to the contrary.

This application is being forwarded to Technology Center 2100 for further processing.

Telephone inquiries concerning this matter may be directed to the undersigned at (571) 272-3205.

Alesia M. Brown
Petitions Attorney
Office of Petitions

CC: DICRAN HALAJIAN
THORNE & HALAJIAN, LLP
Applied Technology Center
111 West Main Street
Bay Shore, NY 11706

UNITED STATES PATENT AND TRADEMARK OFFICE

Commissioner for Patents
United States Patent and Trademark Office
PO Box 1450
Arlington, VA 22313-1450
www.uspto.gov

Paper No. 10

Texas Instruments Incorporated
PO Box 655474, M/S 3999
Dallas, TX 75265

COPY MAILED

JUL 2 2 2003

OFFICE OF PETITIONS

In re Application of	:	
Mitros et al.	:	
Application No. 10/020,034	:	ON PETITION
Filed: December 7, 2001	:	
Attorney Docket No. TI-32931	:	

This is a decision on the petition under 37 CFR 1.137(b), filed June 18, 2003, to revive the above-identified application.

The petition is **GRANTED**.

The above-identified application became abandoned for failure to reply within the meaning of 37 CFR 1.113 in a timely manner in reply to the final Office action mailed September 18, 2002, which set a shortened statutory period for reply of three months. No extensions of time under the provisions of 37 CFR 1.136 have been obtained. Accordingly, the application became abandoned on December 19, 2002.

Telephone inquiries concerning this decision should be directed to Latrice Bond at (703) 308-6911.

The application file is being forwarded to Technology Center 2814 for processing the Request for Continued Examination under 37 CFR 1.114 filed with the instant petition.

Latrice Bond
Paralegal Specialist
Office of Petitions
Office of the Deputy Commissioner
for Patent Examination Policy

UNITED STATES PATENT AND TRADEMARK OFFICE

Commissioner for Patents
United States Patent and Trademark Office
P.O. Box 1450
Alexandria, VA 22313-1450
www.uspto.gov

JOSEPH S. TRIPOLI
THOMSON MULTIMEDIA LICENSING INC.
2 INDEPENDENCE WAY
P.O. BOX 5312
PRINCETON NJ 08543-5312

MAILED

JUN 10 2010

OFFICE OF PETITIONS

In re Application of :
STEVENS, JOHN HERBERT et al. :
Application No. 10/020,045 :
Filed: DECEMBER 31, 2001 :
Attorney Docket No. PU010301 :

ON PETITION

This is a decision on the petition under 37 CFR 1.137(b), filed March 25, 2010 to revive the above-identified application.

The petition is **GRANTED**.

The above-identified application became abandoned for failure to reply within the meaning of 37 CFR 1.113 in a timely manner to the final Office Action mailed September 04, 2008, which set a shortened statutory period for reply of three (3) months. No extension of time under the provisions of 37 CFR 1.136(a) was obtained. Accordingly, the above-identified application became abandoned on December 05, 2008.

The petition satisfies the conditions for revival pursuant to the provisions of 37 CFR 1.137(b) in that (1) the reply in the form of a notice of appeal and an appeal brief; (2) the petition fee of $1,620 and (3) the required statement of unintentional delay have been received. Accordingly, the reply to the final Office Action of September 04, 2008 is accepted as having been unintentionally delayed.

It is not apparent whether the person signing the statement of unintentional delay was in a position to have firsthand knowledge of the facts and circumstances of the delay at issue. Nevertheless, such statement is being treated as having been made as the result of a reasonable inquiry into the facts and circumstances of such delay. See 37 CFR 10.18(b) and Changes to Patent Practice and Procedure; Final rule Notice, 62 Fed. Reg. 53131, 53178 (October 10, 1997), 1203 Off. Gaz. Pat. Office 63, 103 (October 21, 1997). In the event that such an inquiry has not been made, petitioner must make such an inquiry. If such inquiry results in the discovery that it is not correct that the entire delay in filing the required reply from the due date for the reply until the filing of a grantable petition pursuant of 37 CFR 1.137(b) was unintentional, petitioner must notify the Office.

The file does not indicate a change of address has been submitted, although the address given on the petition differs from the address of record. If appropriate, a change of address should be filed in accordance with MPEP 601.03. A courtesy copy of this decision is being mailed to the address given on the petition; however, the Office will mail all future correspondence solely to the address of record.

Telephone inquiries concerning this decision should be directed to Miranda Le at (571) 272-4112 or in her absence, the undersigned at (571) 272-7099.

The application file is being referred to Technology Center AU 2424 for appropriate action on the concurrently filed amendment.

David Bucci
Petitions Examiner
Office of Petitions

CC: THOMSON LICENSING LLC, Patent Operations
JOEL M. FOGELSON
P.O. BOX 5312
PRINCETON, NJ 08542-5312

UNITED STATES PATENT AND TRADEMARK OFFICE

Commissioner for Patents
United States Patent and Trademark Office
P.O. Box 1450
Alexandria, VA 22313-1450
www.uspto.gov

Paper No. 14

STITES & HARBISON PLLC
1199 NORTH FAIRFAX STREET
SUITE 900
ALEXANDRIA, VA 22314

COPY MAILED

AUG 1 5 2005

OFFICE OF PETITIONS

In re Application of :
Jose Edmans Forti :
Application No. 10/020,097 :
Filed: December 18, 2001 :
Attorney Docket No. P07464US00/RFH :

ON PETITION

This is a decision on the petition under 37 CFR 1.137(b), filed June 14, 2005, to revive the above-identified application.

The petition is **GRANTED.**

The above-identified application became abandoned for failure to reply in a timely manner to the final Office action mailed November 7, 2003, which set a shortened statutory period for reply of three (3) months. No extensions of time under the provisions of 37 CFR 1.136(a) were obtained. Accordingly, the application became abandoned on February 9, 2004.

The petition satisfies the requirements of 37 CFR 1.137(b) in that petitioner has supplied (1) the reply in the form of an Amendment and a Request for Continued Examination (RCE); (2) the petition fee of $750; and (3) the required statement of unintentional delay.

Telephone inquiries concerning this decision should be directed to the undersigned at (571) 272-3229.

The application file is being forwarded to Technology Center 2800, Art Unit 2863 for processing the Request for Continued Examination (RCE) under 37 CFR 1.114 filed with the instant petition.

Retta Williams

Retta Williams
Petitions Examiner
Office of Petitions
Office of the Deputy Commissioner
for Patent Examination Policy

UNITED STATES PATENT AND TRADEMARK OFFICE

MAILED

JAN 0 3 2003

Technology Center 2100

COMMISSIONER FOR PATENT
UNITED STATES PATENT AND TRADEMARK OFFIC
WASHINGTON, D.C. 20231
www.uspto.go

Paper No. 5

Kenneth Backus
CARR & FERRELL, LLP
2225 East Bayshore Road, Suite 200
Palo Alto, CA 94303

In re Application of: Joseph P. Montgomery Application No.: 10/020,104 Filed: December 12, 2001 For: LOW BANDWIDTH TELEVISION	DECISION ON REQUEST TO WITHDRAW AS ATTORNEY

This is a decision on the Request to Withdraw from Representation filed July 19, 2002.

A grantable request to withdraw as attorney of record should indicate thereon the present mailing addresses of the attorney(s) who is/are withdrawing from the record and of the applicant. The request for withdrawal must be signed by every attorney seeking to withdraw or contain a clear indication that one attorney is signing on behalf of another/others. A request to withdraw will not be approved unless at least 30 (thirty) days would remain between the date of approval and the later of the expiration date of a time to file a response or the expiration date of the maximum time period which can be extended under 37 C.F.R. § 1.136(a). The effective date of withdrawal being the date of decision and not the date of request. See M.P.E.P. § 402.06. 37 C.F.R. § 1.36 further requires that the applicant or patent owner be notified of the withdrawal of the attorney or agnet.

The singer of the petition, Kenneth Backus is not appointed as an attorney or agent of record. Therefor he is not authorized to act on behalf of the attorneys or record, nor can he effect a change of address.

For the above stated reasons, the request filed July 19, 2002 is **DISMISSED AS MOOT**.

All future communications from the Office will be directed to the below-listed address until otherwise notified by applicant.

CARR & FERRELL
2225 East Bayshore Road, Suite 200
Palo Alto, CA 94303

James R. Matthews
for Vincent N. Trans
Special Programs Examiner
Technology Center 2100
Computer Architecture and Software

UNITED STATES PATENT AND TRADEMARK OFFICE

COMMISSIONER FOR PATENTS
UNITED STATES PATENT AND TRADEMARK OFFICE
WASHINGTON, D.C. 20231
www.uspto.gov

MAILED

APR 10 2003

Technology Center 2100

Paper No. 7

CARR & FERRELL LLP
2225 East Bayshore Road, Suite 200
Palo Alto, CA 94303

In re Application of: Joseph Paul Montgomery, et al.	)	
Application No. 10/020,104	)	**DECISION ON REQUEST FOR**
Filed: December 12, 2001	)	**WITHDRAWAL AS ATTORNEY**
For: LOW BANDWIDTH TELEVISION	)	

This is a decision on the Request To Withdraw from Representation filed March 24, 2003.

A grantable request to withdraw as attorney of record should indicate thereon the present mailing addresses of the attorney(s) who is/are withdrawing from the record and of the applicant. The request for withdrawal must be signed by every attorney seeking to withdraw or contain a clear indication that one attorney is signing on behalf of another/others. A request to withdraw will not be approved unless at least 30 (thirty) days would remain between the date of approval and the later of the expiration date of a time to file a response or the expiration date of the maximum time period which can be extended under 37 C.F.R. § 1. 136(a). The effective date of withdrawal being the date of decision and not the date of request. See M.P.E.P. § 402.06. 37 C.F.R. § 1.36 further requires that the applicant or patent owner be notified of the withdrawal of the attorney or agent.

The request is **GRANTED**.

All future communications from the Office will be directed to the below-listed address until otherwise notified by applicant. This correspondence address is provided by the withdrawn attorney(s). Applicant is reminded of the obligation to promptly notify the Patent and Trademark Office (Office) of any change in correspondence address to ensure receipt of all communications from the Office.

for Vincent N. Trans
Special Programs Examiner
Technology Center 2100
Computer Architecture and Software
(703) 305-9750

cc: Richard Haferkamp
Thompson Coburn LLP
One US Bank Plaza
St. Louis, MO 63101

UNITED STATES PATENT AND TRADEMARK OFFICE

COMMISSIONER FOR PATENTS
UNITED STATES PATENT AND TRADEMARK OFFICE
P.O. BOX 1450
ALEXANDRIA, VA 22313-1450
www.uspto.gov

Paper No. 8

SAWYER LAW GROUP LLP
P O BOX 51418
PALO ALTO CA 94303

COPY MAILED

SEP 3 0 2003

OFFICE OF PETITIONS

In re Application of
Paul L. Master et al.
Application No. 10/020,149
Filed: December 6, 2001
Attorney Docket No. QST-033/1823P
Title: METHOD AND SYSTEM FOR DIGITAL WATERMARKING

DECISION ON PETITION
UNDER 37 C.F.R. §1.137(f)

This is a decision on the petition filed on August 25, 2003, pursuant to 37 C.F.R. §1.137(f), to revive the above-identified application.

A grantable petition pursuant to 37 CFR 1.137(f) must be accompanied by:

(1) Notification of the filing of an application in a foreign country or under a multinational treaty that requires 18 month publication[1];
(2) The petition fee as set forth in 37 C.F.R. § 1.17(m), and;
(3) A statement that the entire delay in filing the notice from the date that the notice was due under 35 U.S.C. §122(b)(2)(B)(iii) until the date the notice was filed was unintentional. The Commissioner may require additional information where there is a question whether the delay was unintentional.

Petitioner states that the instant nonprovisional application is the subject of an application filed in either a foreign or international application on December 4, 2002. However, the United States Patent and Trademark Office was unintentionally not notified of this filing within 45 days subsequent to the filing of the subject application in a foreign country.

1 See PTO/SB/36 and paragraph on PTO/SB/64a for further information. Both may be downloaded at http://www.uspto.gov/web/forms/index.html.

On August 25, 2003, a Notice of Rescission of Nonpublication Request was filed with the Office with the instant petition.

In view of the above, this application became abandoned pursuant to 35 U.S.C. §1.22(b)(2)(B)(iii) and 37 C.F.R. §1.213(c) for failure to timely notify the Office of the filing of either a foreign application or an application under a multilateral international agreement that requires publication of applications 18 months after filing.

The petition under 37 C.F.R. §1.137(f) is **GRANTED**.

Petitioner has submitted the notification of a foreign or international filing, paid the petition fee, and has made the proper statement of unintentional delay.

The instant petition has been found to be in compliance with 37 C.F.R. §1.137(f). Accordingly, the failure to timely notify the Office of a foreign or international filing within 45 days after the date of filing of such foreign or international application as provided by 35 U.S.C. §122(b)(2)(B)(iii) and 37 C.F.R. §1.213(c) is accepted as having been unintentionally delayed.

The previous Request and Certification under 35 U.S.C. §122(b)(2)(B)(i), filed with the original application papers, has been rescinded. A Notice Regarding Rescission of Nonpublication Request which sets forth the projected publication date of January 8, 2004 accompanies this decision on petition.

After this decision is mailed, the application will be forwarded to Technology Center 2100 for further processing.

Telephone inquiries concerning *this decision* should be directed to Attorney Paul Shanoski at (703) 305-0011.

Paul Shanoski
Attorney
Office of Petitions
United States Patent and Trademark Office

UNITED STATES PATENT AND TRADEMARK OFFICE

COMMISSIONER FOR PATENTS
UNITED STATES PATENT AND TRADEMARK OFFICE
WASHINGTON, D.C. 20231
www.uspto.gov

Paper No. 5

MAIL

MAY 2 8 2003

DIRECTOR OFFICE
TECHNOLOGY CENTER 2100

John W. Ryan
Wilmer, Cutler & Pickering
2445 M Street, N.W.
Washington, DC 20037

In re Application of: Pascal JOLY, et al.	)	
Application No. 10/020,150	)	
Filed: December 18, 2001	)	**DECISION ON REQUEST FOR**
For: A STACKED APPROACH TO	)	**WITHDRAWAL AS ATTORNEY**
SERVICE PROVIDER	)	
ARCHITECTURE	)	

This is a decision on the Request To Withdraw from Representation filed March 25, 2003.

A grantable request to withdraw as attorney of record should indicate thereon the present mailing addresses of the attorney(s) who is/are withdrawing from the record and of the applicant. The request for withdrawal must be signed by every attorney seeking to withdraw or contain a clear indication that one attorney is signing on behalf of another/others. A request to withdraw will not be approved unless at least 30 (thirty) days would remain between the date of approval and the later of the expiration date of a time to file a response or the expiration date of the maximum time period which can be extended under 37 C.F.R. § 1. 136(a). The effective date of withdrawal being the date of decision and not the date of request. See M.P.E.P. § 402.06. 37 C.F.R. § 1.36 further requires that the applicant or patent owner be notified of the withdrawal of the attorney or agent.

The request is **GRANTED**.

No further communications to you regarding this application will be made. All future communications from the Office will continue to be directed to the below-listed address until otherwise notified by applicant.

For

Vincent N. Trans
Special Programs Examiner
Technology Center 2100
Computer Architecture and Software
(703) 305-9750

cc: HEWLETT-PACKARD COMPANY
Intellectual Property Administration
P.O. Box 272400
Fort Collins, CO 80527-2400

UNITED STATES PATENT AND TRADEMARK OFFICE

COMMISSIONER FOR PATENTS
UNITED STATES PATENT AND TRADEMARK OFFICE
WASHINGTON, D.C. 20231
www.uspto.gov

Paper No. 7

BROBECK, PHLEGER & HARRISON, LLP
ATTN: INTELLECTUAL PROPERTY DEPARTMENT
1333 H STREET, N.W. SUITE 800
WASHINGTON DC 20005

COPY MAILED

SEP 2 4 2002

OFFICE OF PETITIONS

In re Application of
Cubicciotti
Application No. 10/020,151
Filed: December 18, 2001
For: MODIFIED PHYCOBILISOMES
AND USES THEREFORE

DECISION GRANTING PETITIONS

In re Application of
Cubicciotti
Application No. 10/109,040
Filed: March 29, 2002
For: MODIFIED PHYCOBILISOMES
AND USES THEREFORE

This is a decision on the petition filed April 14, 2002, which is being treated as a petition under 37 CFR 1.181, requesting , in effect, that the files of the above-identified applications be merged and the resulting application accorded a filing date of December 18, 2001. In addition, this petition will address the paper, filed April 19, 2002, entitled, "RESPONSE TO NOTIFICATION OF MISSING REQUIREMENTS AND REQUEST FOR CORRECTED FILING RECEIPT." The April 19, 2002 correspondence will be treated as a petition under 37 CFR 1.181 to vacate the Notice to File Missing Parts of Nonprovisional Application, mailed April 1, 2002.

The petition under 37 CFR 1.181 to merge the above-identified application files is **GRANTED**.

The petition under 37 CFR 1.181 to vacate the Notice to File Missing Parts of Nonprovisional Application, mailed April 1,2002, is **GRANTED**.

The original application papers were filed on December 18, 2001. However, applicant alleges that a review of the USPTO PAIR system on or about March 28, 2002 did not reveal that the Office had received the December 18, 2001 application. As a result, applicant filed duplicate application papers on March 29, 2002, which were assigned application No. 10/109,040 and a filing date of March 28, 2002. In support, the petition is accompanied by a copy of applicant's postcard receipt for the original papers showing a postmark of December 18, 2001. The papers filed on March 29, 2002 are clearly noted as a duplicate of the papers filed on December 18, 2001.

Based on the evidence supplied, it is concluded, in this particular case, that the duplicate application filed on March 29, 2002, was filed as a result of the delay by the Office in processing the original application papers. Therefore, it is appropriate to merge the files in order to correct the error.

The file of application No. 10/109,040 will be merged into the file of application No. 10/020,151 The petition under 37 CFR 1.181 to merge the two application files is granted.

Regarding the petition to vacate the Notice to File Missing Parts of Nonprovisional Application, mailed April 1, 2002, petitioner alleges that an oath or declaration was filed with the original application papers on December 18, 2001. In support, the petition is accompanied by a copy of applicant's itemized postcard receipt with an Office of Initial Patent Examination date stamp affixed thereto. The date stamp shows December 18, 2001 as the date of receipt. The postcard lists, *inter alia*, that the filing includes a declaration.

The return postcard constitutes *prima facie* evidence that declaration was filed on December 18, 2001. MPEP 503. Accordingly, the petition under 37 CFR 1.181 to vacate the Notice of April 1, 2002 is granted.

No petition fees have been or will be charged in connection with these two petitions.

The application is being returned to Office of Initial Patent Examination for further processing, using the copy of the oath or declaration resubmitted on April 19, 2002 and for merging the file of application No. 10/109,040 into the file of application No. 10/020,151. Application No. 10/109,040 will no longer be an active serial number. All future correspondence concerning this application should be directed to application No. 10/020,151, filed December 18, 2001. A corrected filing receipt will be mailed in due course.

Any inquiries pertaining to this matter may be directed to the undersigned at (703) 308-6712.

E. Shirene Willis

E. Shirene Willis
Senior Petitions Attorney
Office of Petitions
Office of the Deputy Commissioner
for Patent Examination Policy

UNITED STATES PATENT AND TRADEMARK OFFICE

Commissioner for Patents
United States Patent and Trademark Office
P.O. Box 1450
Alexandria, VA 22313-1450
www.uspto.gov

Paper No. 15

HUNTON & WILLIAMS LLP
INTELLECTUAL PROPERTY DEPARTMENT
1900 K STREET, N.W.
SUITE 1200
WASHINGTON, DC 20006-1109

COPY MAILED

JUN 2 9 2004

OFFICE OF PETITIONS

In re Application of :
Roger S. Cubicciotti :
Application No. 10/020,151 :
Filed: December 18, 2001 : ON PETITION
Title of Invention: :
MODIFIED PHYCOBILISOMES :
AND USES THEREFORE :

This is a decision in response to the Petition Under 37 CFR § 1.181, Requesting Withdrawal of Holding of Abandonment, filed February 11, 2004.

This Petition is hereby **granted**.

The above-identified application became abandoned for failure to timely and properly reply to the nonfinal Office action, mailed June 20, 2003, which set a three (3) month period for reply. No reply having been received, this application became abandoned on September 21, 2003. A Notice of Abandonment was mailed on January 26, 2004.

Applicant's Assertion

Applicant asserts that a timely reply to the Office action was filed and received in the Office. In support of this assertion, Applicant provides copies of a Reply to Non-final Office Action Under 37 CFR § 1.111; one sheet of drawings; a petition for a one (1) month extension of time; a copy of a check made payable to the Commissioner of Patents and Trademarks, and a copy of a return receipt postcard acknowledging receipt of the above items by this Office on October 20, 2003.

Applicable Law

Evidence of receipt of any correspondence filed in the Patent and Trademark Office can be obtained by submitting a self-addressed postcard properly itemizing and identifying the paper or papers being filed. Upon receipt of the correspondence, the Patent and Trademark Office will check the listing on the post

card against the papers submitted, making sure that all items listed are present and will then stamp the postcard with an Official date stamp and place the postcard in the outgoing mail. "A postcard receipt which itemizes and properly identifies the papers which are being filed serves as *prima facie* evidence of receipt in the PTO of all items listed thereon by the PTO." MPEP § 503.

In view of the foregoing, the holding of abandonment is hereby withdrawn.

The petition fee has been refunded to deposit account No. 50-0206, as authorized in the instant petition.

The application file is being forwarded to Technology Center Art Unit 1743 for consideration of the Reply to Non-final Office Action Under 37 CFR § 1.111 and drawing sheet, filed February 11, 2004, and for continued examination in due course.

Telephone inquiries concerning this decision should be directed to the undersigned at 703-305-0014.

Derek L. Woods
Petitions Attorney
Office of Petitions

UNITED STATES PATENT AND TRADEMARK OFFICE

COMMISSIONER FOR PATENT
UNITED STATES PATENT AND TRADEMARK OFFIC
WASHINGTON, D.C. 20231
www.uspto.go

Paper No. 7

MARTIN A. BRUEHS
P.O. BOX 1404
ALEXANDRIA, VA 22313-1404

COPY MAILED

FEB 1 9 2003

OFFICE OF PETITIONS

In re Application of :
Canakapalli Bhaktavatsala :
Application No. 10/020,184 :
Filed: December 18, 2001 :
Attorney Docket No. 033166-004 :

NOTICE

This is a notice regarding your request for acceptance of a fee deficiency submission under 37 CFR 1.28. On September 1, 1998, the Court of Appeals for the Federal Circuit held that 37 CFR 1.28(c) is the sole provision governing the time for correction of the erroneous payment of the issue fee as a small entity. **See DH Technology v. Synergystex International, Inc. 154 F.3d 1333, 47 USPQ2d 1865 (Fed. Cir. Sept. 1, 1998).**

The Office no longer investigates or rejects original or reissue applications under 37 CFR 1.56. **1098 Off. Gaz. Pat. Office 502 (January 3, 1989)**. Therefore, nothing in this Notice is intended to imply that an investigation was done.

Your fee deficiency submission under 37 CFR 1.28 is hereby **ACCEPTED**.

Inquiries related to this communication should be directed to the Office of Petitions Staff at (703) 305-9285.

This file is being forwarded to Technology Center 1600.

Irvin Dingle
Petitions Examiner
Office of Petitions
Office of the Deputy Commissioner
for Patent Examination Policy

UNITED STATES PATENT AND TRADEMARK OFFICE

COMMISSIONER FOR PATEN
UNITED STATES PATENT AND TRADEMARK OFFI
WASHINGTON, D.C. 2023
www.uspto.g

Paper No. 7

Paul J. Skwierawski
ANTONELLI, TERRY, STOUT &
KRAUS, LLP
1300 North Seventeenth Street, Suite 1800
Arlington, VA 22209

MAILED

JUL 0 7 2003

Technology Center 2100

In re Application of:	)	
Lavie, et al.	)	
Application No. 10/020,200	)	**DECISION ON REQUEST FOR**
Filed: December 18, 2001	)	**WITHDRAWAL AS ATTORNEY**
For: APPARATUS AND METHOD FOR ANALYSIS AND TROUBLESHOOTING OF ELECTRONIC DEVICES	)	

This is a decision on the Request To Withdraw from Representation filed June 19, 2003.

A grantable request to withdraw as attorney of record should indicate thereon the present mailing addresses of the attorney(s) who is/are withdrawing from the record and of the applicant. The request for withdrawal must be signed by every attorney seeking to withdraw or contain a clear indication that one attorney is signing on behalf of another/others. A request to withdraw will not be approved unless at least 30 (thirty) days would remain between the date of approval and the later of the expiration date of a time to file a response or the expiration date of the maximum time period which can be extended under 37 C.F.R. § 1. 136(a). The effective date of withdrawal being the date of decision and not the date of request. See M.P.E.P. § 402.06. 37 C.F.R. § 1.36 further requires that the applicant or patent owner be notified of the withdrawal of the attorney or agent.

The request filed June 19, 2003 meets all the requirements. Accordingly the request is **GRANTED**.

All future communications from the Office will be directed to the below-listed address until otherwise notified by applicant. This correspondence address is provided by the withdrawn attorney(s). Applicant is reminded of the obligation to promptly notify the Patent and Trademark Office (Office) of any change in correspondence address to ensure receipt of all communications from the Office.

James R. Matthews

for Vincent N. Trans
Special Programs Examiner
Technology Center 2100
Computer Architecture and Software
(703) 305-9750

cc: Anne Richards
SCHWEGMAN, LUNDBERT, WOESSNER &
KLUTH P.A.
1600 TCF Tower
121 S. 8th Street
Minneapolis, MN 55402

UNITED STATES PATENT AND TRADEMARK OFFICE

Commissioner for Patents
United States Patent and Trademark Office
P.O. Box 1450
Alexandria, VA 22313-1450
www.uspto.gov

072005
MAILED

JUL 1 1 2005

STERNE, KESSLER, GOLDSTEIN & FOX PLLC
1100 NEW YORK AVENUE, N.W.
WASHINGTON, DC 20005

In re Application of:
SURYA BHATTACHARYA ET AL.
Serial No.: 10/020,208
Filed: 18 December 2001
Docket Number: 1875.0330001

DECISION ON PETITION TO WITHDRAW HOLDING OF ABANDONMENT

This is a decision on the petition filed on June 17, 2004, to withdraw the holding of abandonment of the above-identified application under 37 C.F.R. § 1.181.

The petition to withdraw the holding of abandonment is **GRANTED**.

An Office action (a Notice of Allowance and Fee(s) Due) was mailed December 23, 2003, setting a three-month statutory period for reply. In the absence of receipt of a response, a Notice of Abandonment was mailed on May 14, 2004.

Petitioner asserts that applicant did not receive the Office Action. In support of the assertion, petitioner submitted as evidence of lack of receipt of the Office action: 1) a statement from the practitioner stating that the Office communication was not received by the practitioner and attesting to the fact that a search of the docketing records indicates that the Office communication was not received, 2) a copy of the file jacket, and 3) a copy of the docketing records over the entire period between the mailing date of the Notice of Allowability (December 23, 2003) through February 24, 2004, the date of expiration for the period for reply. The petition was timely filed in response to the Notice of Abandonment mailed May 14, 2004, which provided petitioner with notice that no response had been received.

A review of the file record indicates no irregularity in the mailing of the Notice, and in the absence of any irregularity there is a strong presumption that the Notice was properly mailed to practitioner at the address of record. This presumption may be overcome by a showing that the Notice was not in fact received. The showing required to establish the failure to receive an Office action must include a statement from the practitioner stating that the practitioner did not receive the Office action and attesting to the fact that a search of the file jacket and docket records

indicates that the Office action was not received. A copy of the docket record where the non-received Office action would have been entered had it been received and docketed must be attached to and referenced in practitioner's statement. A copy of the docket record where the nonreceived Office communication would have been entered had it been received and docketed must be attached to and referenced in practitioner's statement. For example, if a three month period for reply was set in the nonreceived Office action, a copy of the docket report showing all replies docketed for a date three months from the mail date of the nonreceived Office action must be submitted as documentary proof of nonreceipt of the Office action. See "Withdrawing the Holding of Abandonment When Office Actions Are Not Received" 1156 Official Gazette 53 (November 16, 1993) and M.P.E.P. § 711.03(c).

Petitioner's timely filed statement and evidentiary support meet the criteria set forth in M.P.E.P. § 711.03(c), and provide a showing that the Office action was not received.

For the above stated reasons, the petition is granted. The Notice of Abandonment is hereby vacated, and the holding of abandonment is therefore withdrawn. The application is restored to pending status. Inconvenience to applicant is regretted.

The Office action (Notice of Allowability) shall be remailed along with a Notice of Allowance and Fee(s) Due. The statutory period for paying the fees will be reset to run from the date these Notices are mailed. Extension of time is not available under 37 C.F.R. § 1.136.

Any inquiry regarding this decision should be directed to Hien H. Phan, Special Program Examiner, at (571) 272-1606.

James Dwyer
for Sharon Gibson

Sharon A. Gibson, Director
Technology Center 2800 - Semiconductors,
Electrical & Optical Systems & Components

UNITED STATES PATENT AND TRADEMARK OFFICE

Commissioner for Patents
United States Patent and Trademark Office
P.O. Box 1450
Alexandria, VA 22313-1450
www.uspto.gov

BIRCH STEWART KOLASCH & BIRCH
PO BOX 747
FALLS CHURCH VA 22040-0747

COPY MAILED

AUG 0 1 2007

OFFICE OF PETITIONS

In re Application of
TANAKA, et al.
Application No. 10/020,240
Filed: December 18, 2001
Attorney Docket No. 0879-0366P

: DECISION GRANTING PETITION
: UNDER 37 CFR 1.313(c)(2)

This is a decision on the petition under 37 CFR 1.313(c)(2), filed July 27, 2007, to withdraw the above-identified application from issue after payment of the issue fee.

The petition is **GRANTED.**

The above-identified application is withdrawn from issue for consideration of a submission under 37 CFR 1.114 (request for continued examination). *See* 37 CFR 1.313(c)(2).

Petitioner is advised that the issue fee paid on June 18, 2007 cannot be refunded. If, however, this application is again allowed, petitioner may request that it be applied towards the issue fee required by the new Notice of Allowance.[1]

Telephone inquiries should be directed to Monica A. Graves at (571) 272-7253.

This application is being referred to Technology Center AU 2617 for processing of the request for continued examination under 37 CFR 1.114 and for consideration of the concurrently filed information disclosure statement.

Frances Hicks
Frances Hicks
Petitions Examiner
Office of Petitions

[1] *The request to apply the issue fee to the new Notice may be satisfied by completing and returning the new Part B – Fee(s) Transmittal Form (along with any balance due at the time of submission). Petitioner is advised that the Issue Fee Transmittal Form* ***must*** *be completed and timely submitted to avoid abandonment of the application.*

UNITED STATES PATENT AND TRADEMARK OFFICE

Commissioner for Patents
United States Patent and Trademark Office
P.O. Box 1450
Alexandria, VA 22313-1450
www.uspto.gov
DIW Mar-06

Richard P. Stitt
SHUGHART THOMSON & KILROY PC
120 W. 12th Street
Kansas City MO 64105

COPY MAILED

MAR 0 6 2006

OFFICE OF PETITIONS

In re Application of	:	
Sangha et al.	:	
Application No. 10/020,257	:	DECISION ON PETITION
Filed: 14 December, 2001	:	
Atty Docket No. CHO004/106011	:	
	:	

This is a decision on the petition filed on 15 August, 2005, under 37 CFR 1.137(b), [1] to revive the above-identified application.

The petition is **GRANTED**.

The application became abandoned on 23 March, 2005, for failure to timely reply to the final Office action mailed 22 December, 2004, which set a three (3) month shortened statutory period for reply. No extensions of time under 37 CFR 1.136(a) were

---

[1] Effective December 1, 1997, the provisions of 37 CFR 1.137(b) now provide that where the delay in reply was unintentional, a petition may be filed to revive an abandoned application or a lapsed patent pursuant to 37 CFR 1.137(b). A grantable petition filed under the provisions of 37 CFR 1.137(b) must be accompanied by:

(1) the required reply, unless previously filed. In a nonprovisional application abandoned for failure to prosecute, the required reply may be met by the filing of a continuing application. In a nonprovisional utility or plant application filed on or after June 8, 1995, and abandoned for failure to prosecute, the required reply may also be met by the filing of a request for continuing examination in compliance with § 1.114. In an application or patent, abandoned or lapsed for failure to pay the issue fee or any portion thereof, the required reply must be the payment of the issue fee or any outstanding balance thereof. In an application, abandoned for failure to pay the publication fee, the required reply must include payment of the publication fee.

(2) the petition fee as set forth in 37 CFR 1.17(m);

(3) a statement that the entire delay in filing the required reply from the due date for the reply until the filing of a grantable petition pursuant to 37 CFR 1.137(b) was unintentional. The Commissioner may required additional information where there is a question whether the delay was unintentional; and

(4) any terminal disclaimer (and fee as set forth in 37 CFR 1.20(d)) required pursuant to 37 CFR 1.137(c)).

obtained. The filing of the present petition precedes the mailing of Notice of Abandonment.

Petitioner has filed a Request for Continued Examination (RCE) and an amendment as the required reply under 37 CFR 1.114.

This application is being referred to Technology Center 1637 for further processing.

Telephone inquiries concerning this matter may be directed to the undersigned at (571)272-3231.

DWood

Douglas I. Wood
Senior Petitions Attorney
Office of Petitions

UNITED STATES PATENT AND TRADEMARK OFFICE

MAR 24 2005

Commissioner for Patents
United States Patent and Trademark Office
P.O. Box 1450
Alexandria, VA 22313-1450
www.uspto.gov

In re Application of	:	
William M. Mitchell et al	:	NOTICE OF WITHDRAWAL
Serial No. 10/020,269	:	FROM ISSUE
Filed: December 14, 2001	:	UNDER 37 CFR 1.313(b)
For: IDENTIFICATION OF ANTIGENIC	:	
PEPTIDE SEQUENCES	:	

The purpose of this communication is to inform you that the above-identified application is being withdrawn from issue pursuant to 37 CFR 1.313.

The application is being withdrawn to permit reopening of prosecution. The reasons therefore will be communicated to you by the examiner.

PTO records reveal that the issue fee has not been paid. If the issue fee has been submitted, the applicant may request a refund or may request that the fee be credited to a deposit account. However, applicant may wait until the application is either again found allowable or held abandoned. If the application is allowed, upon receipt of a new Notice of Allowance and Issue Fee Due, applicant may request that the previously submitted issue fee be applied toward payment of the issue fee in the amount identified on the new Notice of Allowance and Issue Fee Due. If the application is abandoned, applicant may request either a refund or a credit to a deposit account.

The application is being forwarded to the examiner for action.

Jasemine C. Chambers

Jasemine C. Chambers, Director
Technology Center 1600

CLARK & ELBING LLP
101 FEDERAL STREET
BOSTON MA 02110

cc: Allowed Files, PK3-910
Drafting Branch, PK3-910

UNITED STATES PATENT AND TRADEMARK OFFICE

Commissioner for Patents
United States Patent and Trademark Office
P.O. Box 1450
Alexandria, VA 22313-1450
www.uspto.gov

STROOCK & STROOCK & LAVAN LLP
180 Maiden Lane
New York NY 10038-4982

COPY MAILED

MAR 1 1 2005

OFFICE OF PETITIONS

In re Patent of	:	
Takashashi, et al.	:	
Patent No. 6,767,610	:	
Issue Date: July 27, 2004	:	Decision on Petition
Application No. 10/020,284	:	
Filing Date: December 14, 2001	:	
Attorney Docket No. 448564/0043	:	

This is a decision on the petition under 37 C.F.R. § 1.183, filed January 24, 2005, to waive the rules and accept the correction of the assignee data on the front page of the above-identified patent. The petition is also being treated as a request under 37 CFR 3.81 to accept the correction of the assignee data.

The petition under 37 CFR 1.183 is **dismissed as moot.**

The request under 37 CFR 3.81 is **granted**.

Effective June 25, 2004, 37 CFR 3.81(b) has been revised to no longer require the correction of the assignee data prior to issuance of the patent. Therefore, a petition to waive the rule is unnecessary. 37 CFR 3.81(b) currently states:

> Any request for issuance of an application in the name of the assignee submitted after the date of payment of the issue fee, and any request for a patent to be corrected to state the name of the assignee, must state that the assignment was submitted for recordation as set forth in § 3.11 before issuance of the patent, and must include a request for a certificate of correction under § 1.323 of this chapter (accompanied by the fee set forth in § 1.20(a)) and the processing fee set forth in § 1.17(i) of this chapter.

In other words, the request under 37 CFR 3.81(b) will be granted when:

(1) a request under 37 CFR 3.81 and the fee set forth in 37 CFR 1.17(i) are filed,
(2) the assignment was submitted for recordation prior to issuance of the patent, and
(3) a request for a certificate of correction and the fee set forth in 37 CFR 1.20(a) are submitted.

Pursuant to petitioner's authorization, deposit account no. 19-4709 will be charged the required $130.00 processing fee.

Petitioners have met the requirements set forth above. Therefore, the request is granted.

The file is being forwarded to the Certificates of Correction Branch for issuance of the requested Certificate of Correction.

Telephone inquiries should be directed to the undersigned at (571) 272-3230.

E. Shirene Willis

E. Shirene Willis
Petitions Attorney
Office of Petitions

UNITED STATES PATENT AND TRADEMARK OFFICE

Commissioner for Patents
United States Patent and Trademark Office
P.O. Box 1450
Alexandria, VA 22313-1450
www.uspto.gov

WORKMAN NYDEGGER/MICROSOFT
1000 EAGLE GATE TOWER
60 EAST SOUTH TEMPLE
SALT LAKE CITY UT 84111

COPY MAILED

JUL 2 0 2009

OFFICE OF PETITIONS

In re Application of	:	
Dabagh et al.	:	DECISION ON PETITION
Application No. 10/020286	:	
Filing or 371(c) Date: 12/11/2001	:	
Attorney Docket Number:	:	
13768.213	:	

This is a decision on the "PETITION FOR REVIVAL OF AN APPLICATION FOR PATENT ABANDONED FOR FAILURE TO NOTIFY THE OFFICE OF A FOREIGN OR INTERNATIONAL FILING (37 CFR 1.137(f)) filed March 2, 2009.

The petition is **GRANTED**.

Petitioner states that the present nonprovisional application is the subject of a foreign or international application filed on December 2, 2002. However, the US Patent and Trademark Office was unintentionally not notified of this filing within 45 days subsequent to the filing of the foreign or international application.

In view of the above, this application became abandoned pursuant to 35 U.S.C. 122(b)(2)(B)(iii) and 37 CFR 1.213(c) for failure to timely notify the Office of the filing of an application in a foreign country, or under a multilateral international agreement, that requires publication of applications 18 months after filing.

A petition under 37 CFR 1.137(f) must be accompanied by:

(1) the reply, which is met by the notification of such filing in a foreign country or under a multinational treaty;

(2) the petition fee as set forth in 37 CFR 1.17(m); and

(3) a statement that the entire delay in filing the required reply from the due date of the reply until the filing of a grantable petition was unintentional.

The present petition has been found to be in compliance with 37 CFR 1.137(f). Accordingly, the failure to timely notify the Office of a foreign or international filing within 45 days after the date of filing of such foreign or international application as provided by 35 U.S.C. 122(b)(2)(B)(iii) and 37 CFR 1.213(c) is accepted as having been unintentionally delayed.

This application matured into Patent No. 7,209,971on April 24, 2007. Therefore, no further action being required, this patented file is being referred to Files Repository.

Telephone inquiries regarding this decision should be directed to the undersigned at (571) 272-3232.

/Derek L. Woods/
Derek L. Woods
Attorney
Office of Petitions

UNITED STATES PATENT AND TRADEMARK OFFICE

Commissioner for Patents
United States Patent and Trademark Office
P.O. Box 1450
Alexandria, VA 22313-1450
www.uspto.gov

FAY KAPLUN & MARCIN, LLP
150 BROADWAY, SUITE 702
NEW YORK, NY 10038

COPY MAILED

JUN 1 0 2004

OFFICE OF PETITIONS

In re Application of	:	
Norman Thomas Jennings et al	:	
Application No. 10/020,309	:	ON PETITION
Filed: December 14, 2001	:	
Attorney Docket No. 40121/00101	:	

This is a decision on the petition under 37 CFR 1.137(b), filed June 3, 2004, to revive the above-identified application.

The petition is **GRANTED**.

The above-identified application became abandoned for failure submit the issue fee in a timely manner in reply to the Notice of Allowance mailed December 31, 2003, which set a statutory period for reply of three (3) months. Accordingly, the above-identified application became abandoned on April 1, 2004.

Telephone inquiries concerning this decision should be directed to Irvin Dingle at (703) 306-5684.

The application is being forwarded to the Publishing Division.

Irvin Dingle
Petitions Examiner
Office of Petitions
Office of the Deputy Commissioner
for Patent Examination Policy

UNITED STATES PATENT AND TRADEMARK OFFICE

Commissioner for Patents
United States Patent and Trademark Office
P.O. Box 1450
Alexandria, VA 22313-1450
www.uspto.gov

BRIAN M. BERLINER
O'MELVENY & MYERS LLP
400 SOUTH HOPE STREET
LOS ANGELES, CA 90071-2899

COPY MAILED

NOV 0 1 2005

OFFICE OF PETITIONS

In re Application of :
KWON et al. :
Application No. 10/020,344 :
Filed: December 11, 2001 :
Attorney Docket No. 612407-27 :

DECISION
ON PETITION

This is a decision on the petitions filed April 25, 2005, which is being treated as a request under (1) 37 CFR 1.137(a) or alternately under 37 CFR 1.137(b) for revival of the above-identified application.

The petition under 37 CFR 1.137(a) is **DISMISSED**.

The petition under 37 CFR 1.137(b) is **GRANTED**.

The above-identified application became abandoned for failure to reply in a timely manner to the non-final Office action mailed August 16, 2004, which set a shortened statutory period for reply of three (3) months. No extensions of time under the provisions of 37 CFR 1.136(a) were obtained. Accordingly, the application became abandoned on November 17, 2005.

Petition under 37 CFR 1.137(a) – Unavoidable delay

Petitioner states that the entire delay in filing the required reply from the due date for the required reply until the filing of a grantable petition under 37 CFR 1.137(a) was unavoidable because the August 16, 2004 Office Action was mailed to the incorrect address and failed to reach the applicants in sufficient time to permit a timely reply, resulting in abandonment of the application. In support, petitioner refers to the change of correspondence address and revocation/power of attorney filed June 22, 2004 with the Office prior to the mailing of the Office Action on August 16, 2004.

The Revocation/Appointment of Power of Attorney and change of correspondence address filed on June 25, 2004 was not complete since all the statements required by 37 CFR 3.73(b) were not included. While the revocation/power of attorney was signed by a person having apparent authority to sign on behalf of the assignee (e.g., David Macdonald, President), 37 CFR 3.73(b)(1) also requires (i) documentary evidence of a chain of title from the original owners to the assignee (e.g., copy of an executed assignment) or (ii) a statement specifying where

documentary evidence of a chain of title from the original owner to the assignee is recorded in the assignment records of the Office (e.g., reels and frame numbers). No statements or documentary evidence have been provided. As such, the Office Action was not mailed to an incorrect address.

Thus while due care was taken to adhere to the requirement for prompt notification of the change of address, delays resulting from the lack of knowledge or improper application of the patent statute, rules of practice of the MPEP, however, does not constitute "unavoidable" delay. See Haines v. Quigg, 673 F. Supp. at 317, 5 USPQ2d at 1132; Vincent v. Mossinghoff, 230 USPQ 621, 624 (D.D.C. 1985); Smith v. Diamond, 209 USPQ 1091 (D.D.C. 1981); Potter v. Dann, 201 USPQ 574 (D.D.C. 1978); Ex parte Murray, 1891 Dec. Comm'r Pat. 130, 131 (1891). Since the Revocation/Appointment of Power of Attorney did not comply with the rules, i.e., 37 CFR 3.73, the petitioner has not provided a showing to the satisfaction of the Director that the entire delay in filing the required reply from the due date for the reply until the filing of a grantable petition pursuant to 37 CFR 1.137(a) was unavoidable.

In view of the authorization contained in the petition to charge any additional fees, which may be required, the petition fee of $250 to revive unavoidably abandoned applications will be charged to Deposit Account No. 50-0639.

Petition under 37 CFR 1.137(b) – Unintentional delay

The petition satisfies the conditions for revival pursuant to the provisions of 37 CFR 1.137(b) in that (1) the reply in the form of an Amendment Under 37 CFR 1.111; (2) the petition fee of $750; and (3) the required statement of unintentional delay. Accordingly, the reply to the non-final action of August 16, 2004 is accepted as having been unintentionally delayed.

Telephone inquiries concerning this decision should be directed to Denise Pothier at (571) 272-4787.

The application matter is being forwarded to Group Art Unit 1754 for further processing.

Frances Hicks

Frances Hicks
Petitions Examiner
Office of Petitions

UNITED STATES PATENT AND TRADEMARK OFFICE

Commissioner for Patents
United States Patent and Trademark Office
P.O. Box 1450
Alexandria, VA 22313-1450
www.uspto.gov

THE ECLIPSE GROUP LLP
10605 BALBOA BLVD., SUITE 300
GRANADA HILLS CA 91344

COPY MAILED
NOV 24 2008

In re Application of	:	
Gennaidy POBEREZHSKIY et al.	:	
Application No. 10/020,349	:	DECISION ON PETITION
Filed: December 11, 2001	:	
Attorney Docket No. ST00027USU (129-US-U1)	:	

This is a decision on the petition under the unintentional provisions of 37 CFR 1.137(b), filed September 05, 2008, to revive the above-identified application.

The petition is **GRANTED**.

The application became abandoned for failure to timely file a reply within the meaning of 37 CFR 1.113 to the final Office action of October 18, 2006. The proposed reply required for consideration of a petition to revive must be a Notice of Appeal (and appeal fee required by 37 CFR 41.20(b)(2), an amendment that *prima facie* places the application in condition for allowance, a Request for Continued Examination and submission (37 CFR 1.114), or the filing of a continuing application under 37 CFR 1.53(b). See MPEP 711.03(c)(III)(A)(2). A three (3) month extension of time pursuant to the provisions of 37 CFR 1.136(a) was obtained. Accordingly, the date of abandonment of this application is April 19, 2007.

The petition satisfies the requirements of 37 CFR 1.137(b) in that petitioner has supplied (1) the reply in the form of a Request for Continued Examination (RCE) and fee of $810.00, and the submission required by 37 CFR 1.114; (2) the petition fee of $1,540.00; and (3) a proper statement of unintentional delay. Accordingly, the reply to the final Office action of October 18, 2006 is accepted as having been unintentionally delayed.

Telephone inquiries concerning this decision should be directed to the undersigned at (571) 272-4231.

This application is being referred to Technology Center AU 2614 for processing of the RCE and for appropriate action by the Examiner in the normal course of business on the amendment submitted in accordance with 37 CFR 1.114.

Michelle R. Eason
Paralegal Specialist
Office of Petition

SPE RESPONSE FOR CERTIFICATE OF CORRECTION

Paper No.: _____

DATE : **11/17/2006**

TO SPE OF : ART UNIT **1600 (1644)**

SUBJECT : Request for Certificate of Correction on Patent No.: **7,083,784**

Attn: Michail Belyavskyvi

A response is requested with respect to the accompanying request for a certificate of correction.

Please complete this form and forward within **7** days to: **Scanning customer Support**

Send copy also via PTO mail to:
Certificates of Correction Branch – 2900 South Tower 9A39A
Palm location **7580** - Tel. No. 308-8309

With respect to the change(s) requested, correcting Office and/or Applicant's errors, should the patent read as shown in the certificate of correction? No new matter should be introduced, nor should the scope or meaning of the claims be changed.

Ok to enter changes to claim 19 as requested in COCIN in eDan/Madras?

Ernest C. White, LIE - 308-9390x122
Certificates of Correction Branch

Thank You For Your Assistance

The request for issuing the above-identified correction(s) is hereby:
Note your decision on the appropriate box.

- ☒ **Approved** — **All** changes apply.
- ☐ **Approved in Part** — Specify below which changes **do not** apply.
- ☐ **Denied** — State the reasons for denial below.

Comments:

Christina Chan 1644
SPE Art

UNITED STATES PATENT AND TRADEMARK OFFICE

Commissioner for Patents
United States Patent and Trademark Office
P.O. Box 1450
Alexandria, VA 22313-1450
www.uspto.gov

COPY MAILED

NOV 09 2007

OFFICE OF PETITIONS

JONES DAY
222 EAST 41ST ST.
NEW YORK, NY 10017

In re Patent No. 7,083,784	:	
Issue Date: August 1, 2006	:	
Application No. 10/020,354	:	ON PETITION
Filed: December 12, 2001	:	
Attorney Docket No. 10271-027	:	

This is a decision on the petition filed October 23, 2006, which is being treated as a petition under 37 CFR 3.81(b)[1] to add assignee's name on the front page of the above-identified patent by way of a Certificate of Correction.

The petition is **granted.**

Telephone inquiries concerning this matter may be directed to the undersigned at (571) 272-3210. Any questions concerning the issuance of the Certificate of Correction should be directed to the Certificates of Correction Branch at (703) 305-8309.

This application is being forwarded to the Certificates of Correction Branch for issuance of the requested Certificate of Correction.

Irvin Dingle
Petitions Examiner
Office of Petitions

[1] See Official Gazette of June 22, 2004

UNITED STATES PATENT AND TRADEMARK OFFICE

Commissioner for Patents
United States Patent and Trademark Office
P.O. Box 1450
Alexandria, VA 22313-1450
www.uspto.gov

Beverly M. Bunting
Gifford Krass Groh Sprinkle, Anderson & Citkowski
2701 Troy Center Drive, Suite 330
P.O. Box 7021
Troy MI 48007-7021

COPY MAILED

DEC 12 2007

OFFICE OF PETITIONS

In re Application of :
Paul Joseph Stewart et al :
Application No. 10/020,362 :
Filed: October 30, 2001 :
Attorney Docket No. 200-1772 :

DECISION ON PETITION

This is a decision on the petition under 37 CFR 1.137(b), filed March 16, 2007, to revive the above application, and on the subsequent petition, filed March 22, 2007, which is being treated as a petition under 37 CFR 1.181 (no fee), requesting withdrawal of the holding of abandonment in the above-identified application and refund of the petition fee submitted on March 16, 2007.

The petition under 37 CFR 1.137(b) is **DISMISSED** as moot in view of the granting of the petition to withdraw the holding of abandonment under 37 CFR 1.181.

The petition under 37 CFR 1.181 is **GRANTED**.

This application was held abandoned for failure to timely pay the issue and publication fees on or before June 23, 2006, as required by the Notice of Allowance and Fee(s) Due (Notice), mailed March 23, 2006.

Petitioner states that the Notice of March 23, 2006 was returned to the USPTO as undeliverable and was re-mailed on October 2, 2006, the date shown on the envelope, to the old address, which was again returned to the USPTO as undeliverable. This second mailing did not include a new mailing date or period for paying the issue and publication fees. Petitioner states that it was not until January 2, 2007 that he became aware of the existence of the Notice and immediately paid the issue fee on January 3, 2007. Petitioner submits that the payment of the issue fee within three months of the second mailing is a timely submission and requests reconsideration of the holding of abandonment. Additionally, petitioner requests a refund of the $1,500 petition fee paid on March 16, 2007.

A review of the file record discloses that a first Notice was mailed on March 23, 2006, which was returned as undeliverable to the USPTO. Subsequently, the Office remailed, on October 2, 2006, a second Notice to the same address and did not reset the period, which Notice was also returned as undeliverable.

In accordance with *Ex parte Gourtoff*, 1924 C.D. 153, 329 O.G. 536 (Commr. Pat. 1924), when an Office communication is returned to the Office, the Office will check the application file record to ensure that the action was mailed to the correct correspondence address. If not, the Office action should be stamped "remailed" with the remailing date and mailed to the correct correspondence address with the period for reply being reset from the remailed date. *Note* MPEP 707.13. There is no indication in the file record that the Office followed this procedure. Therefore, the period for timely paying the issue and publication fees will be considered to have been reset, *nunc pro tunc,* with the remailing of the Notice on October 2, 2006, with the issue and publication fees now being due on or before January 2, 2007.

It is noted that the Federal Government offices were closed on January 2, 2007, which would have been the due date for payment of the issue and publication fees. Accordingly, the payment of the issue and publication fees on the next business day, January 3, 2007, is considered to be a timely reply to the Notice remailed on October 2, 2006.

In view of the above, the Notice of Abandonment is **vacated** and the holding of abandonment **withdrawn**.

It is noted that the $1,500 petition fee submitted on March 16, 2007 has already been refunded to petitioner.

This application is being referred to the Office of Data Management for further processing in accordance with this decision withdrawing the holding of abandonment for failure to timely pay the issue and publication fees.

Inquiries concerning this decision may be directed to the undersigned at (571) 272-3218 or to the Office of Petitions Help Desk at (571) 272-3282 after January 3, 2008.

Frances Hicks
Petitions Examiner
Office of Petitions

UNITED STATES PATENT AND TRADEMARK OFFICE

Commissioner for Patents
United States Patent and Trademark Office
P.O. Box 1450
Alexandria, VA 22313-1450
www.uspto.gov

James C. Scheller, Jr.
BLAKELY, SOKOLOFF, TAYLOR & ZAFMAN, LLP
Seventh Floor
12400 Wilshire Boulevard
Los Angeles, CA 90025-1026

COPY MAILED
NOV 25 2005
OFFICE OF PETITIONS

In re Application of	:	
Gary F. Feierbach	:	
Application No. 10/020,384	:	ON PETITION
Filed: December 6, 2001	:	
Attorney Docket No. 04860P2679	:	

This is a decision on the petition under 37 CFR 1.137(b), filed August 22, 2005, to revive the above-identified application.

The petition is **DISMISSED**.

Any request for reconsideration of this decision must be submitted within TWO (2) MONTHS from the mail date of this decision. Extensions of time under 37 CFR 1.136(a) are permitted. The reconsideration request should include a cover letter entitled "Renewed Petition under 37 CFR 1.137(b)." This is **not** a final agency action within the meaning of 5 U.S.C. § 704.

A grantable petition under 37 CFR 1.137(b) must be accompanied by: (1) the required reply, unless previously filed; (2) the petition fee as set forth in 37 CFR 1.17(m); (3) a statement that the entire delay in filing the required reply from the due date for the reply until the filing of a grantable petition pursuant to 37 CFR 1.137(b) was unintentional; and (4) any terminal disclaimer (and fee as set forth in 37 CFR 1.20(d)) required by 37 CFR 1.137(d). Where there is a question as to whether either the abandonment or the delay in filing a petition under 37 CFR 1.137 was unintentional, the Commissioner may require additional information. See MPEP 711.03(c)(III)(C) and (D). The instant petition lacks item(s) (1).

The application became abandoned for failure to timely file a reply within the meaning of 37 CFR 1.113 to the final Office action of July 15, 2004. The proposed reply required for consideration of a petition to revive must be a Notice of Appeal (and appeal fee required by 37 CFR 41.20(b)(2)), an amendment that *prima facie* places the application in condition for

allowance, a Request for Continued Examination (RCE) and submission (37 CFR 1.114), or the filing of a continuing application under 37 CFR 1.53(b). See MPEP 711.03(c)(III)(A)(2). Since the amendment submitted does not *prima facie* place the application in condition for allowance, the reply required must be a Notice of Appeal (and appeal fee), RCE, or the filing of a continuing application under 37 CFR 1.53(b). A copy of the Advisory Action is being mailed with this decision on petition.

Further correspondence with respect to this matter should be addressed as follows:

By Mail: Mail Stop PETITION
Commissioner for Patents
P. O. Box 1450
Alexandria, VA 22313-1450

By hand: U. S. Patent and Trademark Office
Customer Service Window, Mail Stop Petitions
Randolph Building
401 Dulany Street
Alexandria, VA 22314

The centralized facsimile number is **(571) 273-8300.**

Telephone inquiries concerning this decision should be directed to the undersigned at (571) 272-3226.

Andrea Smith
Petitions Examiner
Office of Petitions

Enclosure: Copy of the Advisory Action

UNITED STATES PATENT AND TRADEMARK OFFICE

COMMISSIONER FOR PATENTS
UNITED STATES PATENT AND TRADEMARK OFFICE
P.O. BOX 1450
ALEXANDRIA, VA 22313-1450
www.uspto.gov

James C. Scheller, Jr.
BLAKELY, SOKOLOFF, TAYLOR & ZAFMAN, LLP
Seventh Floor
12400 Wilshire Boulevard
Los Angeles, CA 90025-1026

COPY MAILED

FEB 21 2006

OFFICE OF PETITIONS

In re Application of	:	
Gary F. Feierbach	:	
Application No. 10/020,384	:	ON PETITION
Filed: December 6, 2001	:	
Attorney Docket No. 04860P2679	:	

This is a decision on the renewed petition under 37 CFR 1.137(b), filed January 12, 2006, to revive the above-identified application.

The petition is **GRANTED**.

The petition satisfies the requirements of 37 CFR 1.137(b) in that petitioner has supplied (1) the reply in the form of a Request for Continued Examination (RCE) under 37 CFR 1.114, with the $790 filing fee; (2) the petition fee of $1,500; and (3) an adequate statement of unintentional delay.

This application is being revived for consideration of the RCE.

Finance records show that petitioner submitted a renewed petition fee of $1,500 on January 12, 2006. However, a petition under 37 CFR 1.137(b) does not require a renewed fee; therefore, the duplicate payment of $1,500 will be credited to petitioner's deposit account.

The application file is being referred to Technology Center Art Unit 2835.

Telephone inquiries concerning this decision should be directed to the undersigned at (571) 272-3226.

Andrea Smith
Petitions Examiner
Office of Petitions

UNITED STATES PATENT AND TRADEMARK OFFICE

COMMISSIONER FOR PATENTS
UNITED STATES PATENT AND TRADEMARK OFFICE
P.O. BOX 1450
ALEXANDRIA, VA 22313-1450
www.uspto.gov

MAR 12 2004

Connolly Bove Lodge & Hutz LLP
Suite 800
1990 M Street NW
Washington, DC 20036-3425

Paper No. 8

In re Application of Tomas Back et al Serial No. : 10/020,401 Filed : December 18, 2001 For : Method and Arrangement for Producing Elongate Support Element and Product, and Use of the Support Element	: DECISION ON PETITION TO WITHDRAW HOLDING OF ABANDONMENT

This decision is responsive to a status inquiry filed February 4, 2004, which inquiry is now being treated as a petition/request to review the holding of abandonment mailed February 6, 2004 for failure to respond to the Office action mailed May 16, 2003. There is no fee required for this petition.

In support of the request, petitioner has submitted a copy of an amendment that included a certificate of facsimile transmission dated August 6, 2003. Petitioner has also included a copy of a facsimile transmission report confirming transmission of the papers in question on August 6, 2003.

In view of the above, the Notice of Abandonment mailed February 6, 2003 is in error and is hereby vacated. The holding of abandonment is withdrawn. Upon the mailing of this decision, the application will be forwarded to the Examiner via the Legal Instruments Examiner for entry and consideration of the response filed August 6, 2003.

Summary: Holding of Abandonment Withdrawn.

John E. Kittle, Director
Groups 3730 and 3760
Phone: (703) 308-0873

ak/3/05/04

UNITED STATES PATENT AND TRADEMARK OFFICE

UNITED STATES DEPARTMENT OF COMMERCE
United States Patent and Trademark Office
Address: COMMISSIONER FOR PATENTS
P.O. Box 1450
Alexandria, Virginia 22313-1450
www.uspto.gov

APPLICATION NO.	FILING DATE	FIRST NAMED INVENTOR	ATTORNEY DOCKET NO.	CONFIRMATION NO.
10/020,407	12/12/2001	Robert Madge	01-299 71739	8733

24319 7590 03/23/2004

LSI LOGIC CORPORATION
1621 BARBER LANE
MS: D-106 LEGAL
MILPITAS, CA 95035

EXAMINER
TRINH, MICHAEL MANH

ART UNIT	PAPER NUMBER
2822	

DATE MAILED: 03/23/2004

Please find below and/or attached an Office communication concerning this application or proceeding.

UNITED STATES DEPARTMENT OF COMMER
Patent and Trademark Office
ASSISTANT SECRETARY AND COMMISSIONER
OF PATENTS AND TRADEMARKS
Washington, D.C. 20231

In re Application of
Madge
Serial No.: 10/020407
Filing Date: 12-12-01

DECISION
VACATING
NOTICE OF ABANDONMENT

The Petition has been **Granted** for this application. As such, it is appropriate to vacate the Notice of Abandonment.

The Notice of Abandonment mailed 2-9-04 is **VACATED.**

The application has been restored to a pending status, to receive further consideration by the examiner in the normal course of business.

Mrs. Jones
Group 2800 Tech. Support

UNITED STATES PATENT AND TRADEMARK OFFICE

COMMISSIONER FOR PATENTS
UNITED STATES PATENT AND TRADEMARK OFFICE
WASHINGTON, D.C. 20231
www.uspto.gov

Paper No. 6

COPY MAILED

JUL 29 2002

OFFICE OF PETITIONS

WILDMAN, HARROLD, ALLEN & DIXON
225 WEST WACKER DRIVE
CHICAGO, IL 60606

In re Application of
Edara, et al.
Application No. 10/020,420
Filed: December 13, 2001
Docket No.: INS-120
For: SYSTEM AND METHOD OF UTILIZING A HARDWARE COMPONENT TO EXECUTE AN INTERPRETIVE LANGUAGE

DECISION REFUSING STATUS UNDER 37 CFR 1.47(a)

This is in response to the petition under 37 CFR 1.47(a), filed July 5, 2002.

The petition is **DISMISSED**.

Rule 47 applicant is given TWO MONTHS from the mailing date of this decision to reply, correcting the below-noted deficiencies. Any reply should be entitled "Request for Reconsideration of Petition under 37 CFR 1.47(a)," and should only address the deficiencies noted below, except that the reply may include an oath or declaration executed by the non-signing inventor. Failure to respond will result in abandonment of the application. Any extensions of time will be governed by 37 CFR 1.136(a).

The above-identified application was filed December 13, 2001 without an executed oath or declaration and naming Vidyasagar Edara, Paul Zimmerman, Yair Raz, and Anuradha Bommaji as joint inventors. Accordingly, on January 11, 2002, a "Notice to File Missing Parts of Nonprovisional Application" was mailed, requiring an executed oath or declaration and a surcharge.

A grantable petition under 37 CFR 1.47(a) requires: (1) proof that the non-signing inventor cannot be reached or refuses to sign the oath or declaration after having been presented with the application papers (specification, claims and drawings); (2) an acceptable oath or declaration in compliance with 35 USC 115 and 116; (3) the petition fee; and (4) a statement of the last known address of the non-signing inventor.

The petition lacks requirements (1) and (4) stated above.

As to item (1), petitioner has failed to establish that the inventors cannot be reached or refused to sign the oath or declaration after having been presented with the application papers (specification, claims, drawings, and oath or declaration). Petitioner has not demonstrated that the inventors ever received a copy of the application papers (specification, claims, drawings, and oath or declaration).

Petitioner indicates that "formal papers" were forwarded to the non-signing inventors on January 24, 2002 and that to date they have not been returned. The declaration of Melissa Paraday

indicates that a declaration and assignment were mailed to each non-signing inventor. Petitioner has failed to establish that the inventors received the application papers (specification, claims, drawings, and oath or declaration) and thereafter refused requests to execute the oath or declaration.

Petitioner is reminded that before a refusal to sign an oath or declaration can be alleged, it must be demonstrated that a *bona fide* effort has been made to present a copy of the application papers (specification, including claims, drawings, and oath or declaration) to each non-signing inventor. A copy of the application papers should be sent to the last known address of each non-signing inventor, or, if the non-signing inventor is represented by counsel, to the address of the non-signing inventor's attorney. *See*, MPEP 409.03(d).

Any renewed petition should be accompanied by evidence to establish that each non-signing inventor was sent a complete copy of the application papers and thereafter refused to execute the declaration. Petitioner may wish to provide the Office copies of letters sent to the inventors indicating the enclosure of the application papers (specification, claims, drawings, and oath or declaration). If after the inventors receive the application papers and requests to execute the oat or declaration are refused, these facts should be set forth in a statement of facts signed by the person to whom the refusals were made and detailing with specificity the exact manner of the refusals. If a written refusal has been made, a copy of the written refusal should be included on renewed petition.

As to item (4), the petition fails to set forth the last known addresses of the non-signing inventors. The Office is construing the last known addresses of the non-signing inventors to be that listed on the declaration submitted herewith. If the last known addresses of the non-signing inventors are other than that listed on the declaration, petitioner is required to provide the Office with the correct last known address of the non-signing inventors.

Further correspondence with respect to this matter should be addressed as follows:

By mail: Commissioner for Patents
Box DAC
Washington, DC 20231

By FAX: (703) 308-6916
Attn: Office of Petitions

By hand: Crystal Plaza Four, Suite 3C23
2201 S. Clark Place
Arlington, VA

Telephone inquiries related to this decision may be directed to the undersigned at (703) 305-0310.

Alesia M. Brown
Petitions Attorney
Office of Petitions
Office of the Deputy Commissioner
for Patent Examination Policy

UNITED STATES PATENT AND TRADEMARK OFFICE

COMMISSIONER FOR PATENTS
UNITED STATES PATENT AND TRADEMARK OFFICE
WASHINGTON, D.C. 20231
www.uspto.gov

Paper No. 8

COPY MAILED

OCT 0 1 2002

OFFICE OF PETITIONS

WILDMAN, HARROLD, ALLEN & DIXON
225 WEST WACKER DRIVE
CHICAGO, IL 60606

In re Application of
Edara, et al.
Application No. 10/020,420
Filed: December 13, 2001
Docket No.: INS-120
For: SYSTEM AND METHOD OF UTILIZING A HARDWARE COMPONENT TO EXECUTE AN INTERPRETIVE LANGUAGE

DECISION REFUSING STATUS UNDER 37 CFR 1.47(a)

This is in response to the renewed petition under 37 CFR 1.47(a), filed September 23, 2002.

The petition is **DISMISSED**.

Rule 47 applicant is given TWO MONTHS from the mailing date of this decision to reply, correcting the below-noted deficiencies. Any reply should be entitled "Request for Reconsideration of Petition under 37 CFR 1.47(a)," and should only address the deficiencies noted below, except that the reply may include an oath or declaration executed by the non-signing inventor. Failure to respond will result in abandonment of the application. Any extensions of time will be governed by 37 CFR 1.136(a).

The above-identified application was filed December 13, 2001 without an executed oath or declaration and naming Vidyasagar Edara, Paul Zimmerman, Yair Raz, and Anuradha Bommaji as joint inventors. Accordingly, on January 11, 2002, a "Notice to File Missing Parts of Nonprovisional Application" was mailed, requiring an executed oath or declaration and a surcharge. A petition under 37 CFR 1.47(a)w as filed July 5, 2002 and dismissed July 29, 2002.

A grantable petition under 37 CFR 1.47(a) requires: (1) proof that the non-signing inventor cannot be reached or refuses to sign the oath or declaration after having been presented with the application papers (specification, claims and drawings); (2) an acceptable oath or declaration in compliance with 35 USC 115 and 116; (3) the petition fee; and (4) a statement of the last known address of the non-signing inventor.

The petition lacks requirement (1) set forth above.

As to item (1), petitioner has failed to establish that the inventors cannot be reached or refused to sign the oath or declaration after having been presented with the application papers (specification, claims, drawings, and oath or declaration). Petitioner has not demonstrated that the inventors ever received a copy of the application papers (specification, claims, drawings, and oath or declaration).

Petitioner has provided no evidence that the non-signing inventors received a complete copy of the application papers (**specification**,

claims, drawings, and oath or declaration) and thereafter refused to execute the oath or declaration. The declaration of Melissa Paraday indicates that "formal papers" were sent to the non-signing inventors on January 24, 2002, however, the copy of the cover letters to the inventors dated January 24, 2002 indicates that the inventors were forwarded a copy of the declaration and the assignment.

The renewed petition states that the non-signing inventors received the "Declarations, and by their failure to return the Declarations, have effectively refused to sign and return the Declarations." Petitioner is reminded that before a refusal to sign an oath or declaration can be alleged, it must be demonstrated that a *bona fide* effort has been made to present a copy of the application papers (specification, including claims, drawings, and oath or declaration) to each non-signing inventor. Petitioner has failed to establish that the non-signing inventors received a copy of the application papers (specification, claims, drawings, and oath or declaration) and thereafter refused to execute the oath or declaration.

Any renewed petition should be accompanied by evidence to establish that each non-signing inventor was sent a complete copy of the application papers (specification, claims, drawings, and oath or declaration) and thereafter refused to execute the declaration. Petitioner may wish to provide the Office copies of letters sent to the inventors indicating the enclosure of the application papers (specification, claims, drawings, and oath or declaration). If after the inventors receive the application papers and requests to execute the oat or declaration are refused, these facts should be set forth in a statement of facts signed by the person to whom the refusals were made and detailing with specificity the exact manner of the refusals. If a written refusal has been made, a copy of the written refusal should be included on renewed petition.

Further correspondence with respect to this matter should be addressed as follows:

By mail: Commissioner for Patents
Box DAC
Washington, DC 20231

By FAX: (703) 308-6916
Attn: Office of Petitions

By hand: Crystal Plaza Four, Suite 3C23
2201 S. Clark Place
Arlington, VA

Telephone inquiries related to this decision may be directed to the undersigned at (703) 305-0310.

Alesia M. Brown
Petitions Attorney
Office of Petitions
Office of the Deputy Commissioner
for Patent Examination Policy

10

UNITED STATES PATENT AND TRADEMARK OFFICE

COMMISSIONER FOR PATENTS
UNITED STATES PATENT AND TRADEMARK OFFICE
WASHINGTON, D.C. 20231
www.uspto.gov

Paper No. 10

COPY MAILED

DEC 3 0 2002

OFFICE OF PETITIONS

WILDMAN, HARROLD, ALLEN & DIXON
225 WEST WACKER DRIVE
CHICAGO, IL 60606

In re Application of :
Edara, et al. :
Application No. 10/020,420 : DECISION GRANTING STATUS
Filed: December 13, 2001 : UNDER 37 CFR 1.47(a)
Docket No.: INS-120 :
For: SYSTEM AND METHOD OF UTILIZING :
A HARDWARE COMPONENT TO EXECUTE AN :
INTERPRETIVE LANGUAGE :

This is in response to the renewed petition under 37 CFR 1.47(a), filed December 2, 2002.

The petition is **GRANTED**.

Petitioner has shown that inventor Yair Raz has refused to join in the filing of the above-identified application after having been presented with the application papers.

The above-identified application and papers have been reviewed and found in compliance with 37 CFR 1.47(a). This application is hereby accorded Rule 1.47(a) status.

As provided in Rule 1.47(c), this Office will forward notice of this application's filing to the non-signing inventor at the address given in the petition. Notice of the filing of this application will also be published in the Official Gazette.

After this decision is mailed, the above-identified application will be returned to the Office of Initial Patent Examination for further processing.

Telephone inquiries related to this decision may be directed to the undersigned at (703) 305-0310.

Alesia M. Brown
Petitions Attorney
Office of Petitions
Office of the Deputy Commissioner
for Patent Examination Policy

UNITED STATES PATENT AND TRADEMARK OFFICE

COMMISSIONER FOR PATENTS
UNITED STATES PATENT AND TRADEMARK OFFICE
WASHINGTON, D.C. 20231
www.uspto.gov

YAIR RAZ
1575 LEWISTON DRIVE
SUNNYVALE, CA 94087

COPY MAILED

DEC 3 0 2002

OFFICE OF PETITIONS

In re Application of
Edara, et al.
Application No. 10/020,420
Filed: December 13, 2001
Docket No.: INS-120
For: SYSTEM AND METHOD OF UTILIZING A HARDWARE COMPONENT TO EXECUTE AN INTERPRETIVE LANGUAGE

LETTER

Dear Sir:

You are named as an inventor in the above-identified United States patent application filed under the provisions of 35 U.S.C. 116 (United States Code) and 37 C.F.R. § 1.47(a), Rules of Practice in Patent Cases. Should a patent be granted on the application you will be designated therein as a joint inventor.

As a named inventor you are entitled to inspect any paper in the file wrapper of the application, order copies of all or any part thereof (at a prepaid cost as per 37 C.F.R. § 1.19) or make your position of record in the application. Alternatively, you may arrange to do any of the preceding through a registered patent attorney or agent presenting written authorization from you. If you care to join the application, counsel of record (see below) would presumably assist you. Joining in the application would entail the filing of an appropriate oath or declaration by you pursuant to 37 C.F.R. § 1.63.

Telephone inquiries regarding this communication should be directed to the undersigned at (703) 305-0310. Requests for information regarding your application should be directed to the File Information Unit at (703) 308-2733. Information regarding how to pay for and order a copy of the application, or a specific paper in the application, should be directed to Certification Division at (703) 308-9726 or 1-800-972-6382 (outside the Washington D.C. area).

Alesia M. Brown
Petitions Attorney
Office of Petitions
Office of the Deputy Commissioner
for Patent Examination Policy

UNITED STATES PATENT AND TRADEMARK OFFICE

UNITED STATES DEPARTMENT OF COMMERCE
United States Patent and Trademark Office
Address: COMMISSIONER FOR PATENTS
P.O. Box 1450
Alexandria, Virginia 22313-1450
www.uspto.gov

APPLICATION NO.	FILING DATE	FIRST NAMED INVENTOR	ATTORNEY DOCKET NO.	CONFIRMATION NO.
10/020,425	12/07/2001	Mitsuaki Oshima	MTS-520US2	8994

7590 06/26/2003

Allan Ratner
Ratner & Prestia
PO Box 980
Valley Forge, PA 19482

EXAMINER
CALLAHAN, PAUL E

ART UNIT	PAPER NUMBER
2134	7

DATE MAILED: 06/26/2003

Please find below and/or attached an Office communication concerning this application or proceeding.

UNITED STATES PATENT AND TRADEMARK OFFICE

COMMISSIONER FOR PATEN
UNITED STATES PATENT AND TRADEMARK OFFI
WASHINGTON, D.C. 2023
www.uspto.g

Paper No. 7

Allan Ratner
Ratner & Prestia
P.O. Box 980
Valley Forge, Pennsylvania 19482

JUN 26 2003

In re Application of: Mitsuaki Oshima et al.	)	
Application No.: 10/020,425	)	
Filed: December 7, 2001	)	**DECISION ON PETITION**
For: MARK FORMING APPARATUS,	)	**UNDER 37 C.F.R. § 1.181 TO**
METHOD OF FORMING LASER	)	**ACCEPT PAPERS AS TIMELY**
MARK ON OPTICAL DISK,	)	**FILED AND WITHDRAW**
REPRODUCING APPARATUS,	)	**HOLDING OF**
OPTICAL DISK AND METHOD OF	)	**ABANDONMENT**
PRODUCING OPTICAL DISK	)	

This decision is in response to the communication of June 16, 2003 which is being treated as a petition under 37 CFR § 1.181 to a withdraw the holding of abandonment of the above-identified application.

This application was held abandoned for failure to file a timely response to the Office action of mail date December 4, 2002. A Notice of Abandonment has not been mailed.

In response to a telephone call from the Examiner indicating that no response to the Office action had been received, Applicant provided a copy of (1) an amendment filed in response to the Office action of mail date December 4, 2002, (2) a fee transmittal sheet indicating checks in the amount of $220.00 to cover the statutory disclaimer fee and for a one-month extension of time, (3) an Information Disclosure Statement, (4) a Terminal Disclaimer, (5) a Korean Office action, and (6) a post card with a PTO stamp indicating receipt at the USPTO on April 1, 2003 of the aforementioned items. The fees were posted to the application on April 1 and April 8, 2003.

M.P.E.P. § 503 states:

> A post card receipt which itemizes and properly identifies the items which are being filed serves as *prima facie* evidence of receipt in the USPTO of all the items listed thereon on the date stamped thereon by the USPTO.

Petitioner has established that a response was filed on April 1, 2003 with the requisite fee for a one-month extension of time necessary for the response to be considered timely. Thus, Petitioner has established that a response was timely filed and the Abandonment was the result of Office error in not matching the response to the application file.

The petition is **GRANTED**. The Notice of Abandonment is **WITHDRAWN**.

The application file is being forwarded to the Technology Center support staff for processing of the amendment. After processing, the application will then be forwarded to the Examiner for appropriate action.

Pinchus M. Laufer
Special Programs Examiner
Technology Center 2100
Computer Architecture, Software, and Information Security
(703) 306-4160

UNITED STATES PATENT AND TRADEMARK OFFICE

Commissioner for Patents
United States Patent and Trademark Office
P.O. Box 1450
Alexandria, VA 22313-1450
www.uspto.gov

MAILED

FEB 03 2009

TECHNOLOGY CENTER 2100

Lawrence E. Ashery
P.O. Box 980
Valley Forge, PA 19482

In re Application of:
Mitsuaki Oshima et al.
Application No. 10/020,425
Filed: December 7, 2001
For: MARK FORMING APPARATUS, METHOD OF FORMING LASER MARK ON OPTICAL DISK, REPRODUCING APPARATUS, OPTICAL DISK AND METHOD OF PRODUCING OPTICAL DISK

DECISION ON PETITION UNDER 37 C.F.R. § 1.181

This is a decision on the petition filed on November 12 2008 under 37 CFR § 1.181 requesting that the Examiner consider all references listed on the Form PTO-1449s filed with the Information Disclosure Statement on April 24 2008.

The petition is **Dismissed as Moot**.

BACKGROUND

A notice of allowance was mailed on November 3, 2008. The Information Disclosure Statement (IDS) of April 24 2008 was not considered at that time. The IDSs of January 5 2005 and June 5 2006 were considered in the notice of allowance.

A petition was filed by the applicant on November 12 2008 requesting the references listed on Form-1449s filed with the IDSs filed stated be considered. The IDS of April 24 2008 was resubmitted concurrently with this petition.

REGULATIONS AND PRACTICE

MPEP § 609 states the following:

> Where the information listed is not in the English language, but was cited in a search report or other action by a foreign patent office in a counterpart foreign application, the requirement for a concise explanation of relevance can be satisfied by submitting an English-language version of the search report or action which indicates the degree of relevance found by the foreign office. This may be an explanation of which portion of the reference is particularly relevant, to which claims it applies, or merely an "X", "Y", or "A" indication on a search report.

OPINION

The February 16, 2005 IDS was filed under 37 CFR 1.97 and does meet the requirements of both rules 1.97 and 1.98 and MPEP 609 therefore consideration by the examiner is warranted. The examiner has already considered the document, a signed, initialed and dated 1449 has been scanned into IFW as of January 21, 2009.

Accordingly, as applicant's relief has already been received the petition is moot and therefore dismissed.

Any inquiry concerning this decision should be directed to Tod Swann at (571) 272-3612.

Tod Swann
WorkGroup QAS
Technology Center 2400

UNITED STATES PATENT AND TRADEMARK OFFICE

UNITED STATES DEPARTMENT OF COMMERCE
United States Patent and Trademark Office
Address: COMMISSIONER FOR PATENTS
P.O. Box 1450
Alexandria, Virginia 22313-1450
www.uspto.gov

APPLICATION NO.	FILING DATE	FIRST NAMED INVENTOR	ATTORNEY DOCKET NO.	CONFIRMATION NO.
10/020,425	12/07/2001	Mitsuaki Oshima	MTS-520US2	8994

7590 02/03/2009

Allan Ratner
Ratner & Prestia
PO Box 980
Valley Forge, PA 19482

EXAMINER
CALLAHAN, PAUL E

ART UNIT	PAPER NUMBER
2437	

MAIL DATE	DELIVERY MODE
02/03/2009	PAPER

Please find below and/or attached an Office communication concerning this application or proceeding.

The time period for reply, if any, is set in the attached communication.

SPE RESPONSE FOR CERTIFICATE OF CORRECTION

DATE : 3/8/07

Paper No.: _____

TO SPE OF : ART UNIT 2134

SUBJECT : Request for Certificate of Correction for Appl. No.: 10/020427 Patent No.: RE39297E

Please respond to this request for a certificate of correction within 7 days.

Please review the requested changes/corrections as shown in the **COCIN** document(s) in the IFW application image. No new matter should be introduced, nor should the scope or meaning of the claims be changed.

Please complete the response (see below) and forward the completed response to scanning using document code **COCX**.

Virginia Tolbert
Certificates of Correction Branch

703-308-9390 ext. 113

Thank You For Your Assistance

The request for issuing the above-identified correction(s) is hereby:
Note your decision on the appropriate box.

P.C. ☑ **Approved** — **All** changes apply.

☐ **Approved in Part** — Specify below which changes **do not** apply.

☐ **Denied** — State the reasons for denial below.

Comments: _____

E Yoo
SPE

2137
Art Unit

10/020427
RE 39297 E

C8C

MTS-520US3

PATENT

OIPE IAP51
FEB 0 5 2007
PATENT & TRADEMARK OFFICE

IN THE UNITED STATES PATENT AND TRADEMARK OFFICE

Patent Number: RE39,297 E
Issued: September 19, 2006
Name of Patentee: Mitsuaki Oshima et al.
Title of Invention: MARK FORMING APPARATUS, METHOD OF FORMING LASER MARK ON OPTICAL DISK, REPRODUCING APPARATUS, OPTICAL DISK AND METHOD OF PRODUCING OPTICAL DISK

REQUEST FOR CERTIFICATE OF CORRECTION OF PATENT FOR PTO MISTAKE (37 C.F.R. § 1.322(a))

Commissioner for Patents
P.O. Box 1450
Alexandria, VA 22313-1450

Certificate
FEB 0 8 2007
of Correction

Attention: Decision and Certificate of Correction
Branch of the Patent Issue Division

1. Attached in duplicate is Form PTO-1050 with at least one copy being suitable for printing.

2. Correction of the Official Letters Patent is respectfully requested in view of the following text which appears correctly in the application file:

On the Title Page (Page 2), Item (56) References Cited, FOREIGN PATENT DOCUMENTS
Duplicate reference "EP 0545472" should be deleted.

On the Title Page (Page 2), Item (56) References Cited, FOREIGN PATENT DOCUMENTS
Delete "JP 5-325193 1/1991" and add -- JP 5-325193 12/1993 --
as indicated in the IDS dated December 7, 2001

On the Title Page (Page 2), Item (56) References Cited, FOREIGN PATENT DOCUMENTS
Add:
-- JP 58-211343 12/1983 --
-- JP 61-248250 11/1986 --
-- JP 03-078178 4/1991 --
-- JP 03-116441 5/1991 --
-- JP 02-056750 2/1990 --
as indicated in the Supplemental IDS dated February 19, 2003

FEB 0 9 2007

On the Title Page (Page 2), Item (56) References Cited, FOREIGN PATENT DOCUMENTS
Add:
--JP 5-234321 9/1993 --
as indicated in the Supplemental IDS dated April 3, 2003

On the Title Page (Page 2), Item (56) References Cited, OTHER PUBLICATIONS
Add:
-- Korean Patent Office Official Action , dated March 5, 2003 --
as indicated in the Supplemental IDS dated April 3, 2003

At Column 42, line 20, claim 28 of the Letters Patent,
after "trimmed" add -- by a laser --
as indicated on page 9, line 12, claim 31 of the Amendment dated December 19, 2002
Claim 31 of the Amendment is claim 28 of the Letters Patent

At Column 42, line 23, claim 28 of the Letters Patent,
delete "on a track of" and add -- functioning as a track on --
as indicated on page 3, line 15, claim 31 of the Second Supplemental Preliminary Amendment dated August 30, 2002
Claim 31 of the Second Supplemental Preliminary Amendment is claim 28 of the Letters Patent.

At Column 42, line 30, claim 29 of the Letters Patent,
after "trimming" add -- by a laser --
as indicated on page 10, line 1, claim 32 of the Amendment dated December 19, 2002
Claim 32 of the Amendment is claim 29 of the Letters Patent

At Column 42, line 31, claim 29 of the Letters Patent,
delete "on a track of" and add -- functioning as a track on --
as indicated on page 3, line 25, claim 32 of the Second Supplemental Preliminary Amendment dated August 30, 2002
Claim 32 of the Second Supplemental Preliminary Amendment is claim 29 of the Letters Patent

3. Please send the Certificate to:

Name: Lawrence E. Ashery
P.O. Box 980
Valley Forge, PA 19482
(610) 407-0700

FEB 0 9 2007

Name of Assignee:	Matsushita Electric Industrial Co., Ltd.
Assignment Recorded on:	April 10, 1996
Reel:	7884
Frame:	0122

Respectfully submitted,

Lawrence E. Ashery, Reg. 34,515
Attorney for Applicants

LEA/ds

Enclosure: Form PTO-1050 (in duplicate)

Dated: January 31, 2007

P.O. Box 980
Valley Forge, PA 19482
(610) 407-0700

The Commissioner for Patents is hereby authorized to charge payment to Deposit Account No. **18-0350** of any fees associated with this communication.

I hereby certify that this correspondence is being deposited with the United States Postal Service as first class mail, with sufficient postage, in an envelope addressed to: Commissioner for Patents, P.O. Box 1450, Alexandria, VA 22313-1450 Attn: Decision and Certificate of Correction Branch of the Patent Issue Division on:

January 31, 2007

Deborah Spratt Deborah Spratt

ds/90517

FEB 0 9 2007

PTO/SB/44 (04-05))
Approved for use through 04/30/2007. OMB 0651-0033
U.S. Patent and Trademark Office. U.S. DEPARTMENT OF COMMERCE
Under the Paperwork Reduction Act of 1995, no persons are required to respond to a collection of information unless it displays a valid OMB control number.
(Also Form PTO-1050)

UNITED STATES PATENT AND TRADEMARK OFFICE
CERTIFICATE OF CORRECTION

PATENT NO: RE39,297 E

APPLICATION NO.: 10/020,427

DATED: SEPTEMBER 19, 2006

INVENTOR(S): MITSUAKI OSHIMA ET AL.

It is certified that error appears in the above-identified patent and that said Letters Patent is hereby corrected as shown below:

Title Page (Page 2), Item (56) References Cited, FOREIGN PATENT DOCUMENTS
Delete Duplicate Reference "EP 0545472 6/1993"

Title Page (Page 2), Item (56) References Cited, FOREIGN PATENT DOCUMENTS
Change "JP 5-325193 1/1991" to -- JP 5-325193 12/1993 --

Title Page (Page 2), Item (56) References Cited, FOREIGN PATENT DOCUMENTS
Add
-- JP 5-234321 9/1993 --
-- JP 58-211343 12/1983 --
-- JP 61-248250 11/1986 --
-- JP 03-078178 4/1991 --
-- JP 03-116441 5/1991 --
-- JP 02-056750 2/1990 --

Title Page (Page 2), Item (56) References Cited, OTHER PUBLICATIONS
Add
-- Korean Patent Office Official Action , dated March 5, 2003 --

Column 42
Line 20, after "trimmed" add -- by a laser --

Column 42
Line 23, delete "on a track of" add -- functioning as a track on --

Column 42
Line 30, after "trimming" add -- by a laser --

Column 42
Line 31, delete "on a track of" add -- functioning as a track on --

Mailing Address of Sender:

RatnerPrestia
P.O. Box 980
Valley Forge, PA 19482
(610) 407-0700

This collection of information is required by 37 CFR 1.322, 1.323 and 1.324. The information is required to obtain or retain a benefit by the public which is to file (and by the USPTO to process) an application. Confidentiality is governed by 35 U.S.C. 122 and 37 CFR 1.14. This collection is estimated to take 1.0 hour to complete, including gathering, preparing, and submitting the completed application form to the USPTO. Time will vary depending upon the individual case. Any comments on the amount of time you require to complete this form and/or suggestions for reducing this burden, should be sent to the Chief Information Officer, U.S. Patent and Trademark Office, U.S. Department of Commerce, P.O. Box 1450, Alexandria, VA 22313-1450. DO NOT SEND FEES OR COMPLETED FORMS TO THIS ADDRESS. **SEND TO: Attention Certificate of Corrections Branch, Commissioner for Patents, P.O. Box 1450, Alexandria, VA 22313-1450.**

If you need assistance completing the form, call 1-800-PTO-9199 and select option 2.

FEB 0 9 2007

PTO/SB/44 (04-05))
Approved for use through 04/30/2007. OMB 0651-0033
U.S. Patent and Trademark Office. U.S. DEPARTMENT OF COMMERCE
Under the Paperwork Reduction Act of 1995, no persons are required to respond to a collection of information unless it displays a valid OMB control number.
(Also Form PTO-1050)

UNITED STATES PATENT AND TRADEMARK OFFICE
CERTIFICATE OF CORRECTION

PATENT NO: RE39,297 E

APPLICATION NO.: 10/020,427

DATED: SEPTEMBER 19, 2006

INVENTOR(S): MITSUAKI OSHIMA ET AL.

It is certified that error appears in the above-identified patent and that said Letters Patent is hereby corrected as shown below:

Title Page (Page 2), Item (56) References Cited, FOREIGN PATENT DOCUMENTS
Delete Duplicate Reference "EP 0545472 6/1993"

Title Page (Page 2), Item (56) References Cited, FOREIGN PATENT DOCUMENTS
Change "JP 5-325193 1/1991" to -- JP 5-325193 12/1993 --

Title Page (Page 2), Item (56) References Cited, FOREIGN PATENT DOCUMENTS
Add
-- JP 5-234321 9/1993 --
-- JP 58-211343 12/1983 --
-- JP 61-248250 11/1986 --
-- JP 03-078178 4/1991 --
-- JP 03-116441 5/1991 --
-- JP 02-056750 2/1990 --

Title Page (Page 2), Item (56) References Cited, OTHER PUBLICATIONS
Add
-- Korean Patent Office Official Action , dated March 5, 2003 --

Column 42
Line 20, after "trimmed" add -- by a laser --

Column 42
Line 23, delete "on a track of" add -- functioning as a track on --

Column 42
Line 30, after "trimming" add -- by a laser --

Column 42
Line 31, delete "on a track of" add -- functioning as a track on --

Mailing Address of Sender:

RatnerPrestia
P.O. Box 980
Valley Forge, PA 19482
(610) 407-0700

This collection of information is required by 37 CFR 1.322, 1.323 and 1.324. The information is required to obtain or retain a benefit by the public which is to file (and by the USPTO to process) an application. Confidentiality is governed by 35 U.S.C. 122 and 37 CFR 1.14. This collection is estimated to take 1.0 hour to complete, including gathering, preparing, and submitting the completed application form to the USPTO. Time will vary depending upon the individual case. Any comments on the amount of time you require to complete this form and/or suggestions for reducing this burden, should be sent to the Chief Information Officer, U.S. Patent and Trademark Office, U.S. Department of Commerce, P.O. Box 1450, Alexandria, VA 22313-1450. DO NOT SEND FEES OR COMPLETED FORMS TO THIS ADDRESS. **SEND TO: Attention Certificate of Corrections Branch, Commissioner for Patents, P.O. Box 1450, Alexandria, VA 22313-1450.**

If you need assistance completing the form, call 1-800-PTO-9199 and select option 2.

FEB 0 9 2007

OIPE IAP5
FEB 0 5 2007
PATENT & TRADEMARK OFFICE

PTO/SB/21 (09-04) (AW 10/2004)
Approved for use through 7/31/2006. OMB 0651-0031
U.S. Patent and Trademark Office: U.S. DEPARTMENT OF COMMERCE
Under the Paperwork Reduction Act of 1995, no persons are required to respond to a collection of information unless it displays a valid OMB control number.

TRANSMITTAL FORM

(to be used for all correspondence after initial filing)

Total Number of Pages in This Submission

U.S. Patent No.	RE39,297 E
Issued	September 19, 2006
First Named Inventor	Mitsuaki Oshima et al.
Art Unit	
Examiner Name	
Attorney Docket No.	MTS-520US3

ENCLOSURES *(Check all that apply)*

- ☐ Fee Transmittal Form
  - ☐ Fee Attached
- ☐ Amendment/Reply
  - ☐ After Final
  - ☐ Affidavits/Declaration(s)
- ☐ Extension of Time Request
- ☐ Express Abandonment Request
- ☐ Information Disclosure Statement
- ☐ Certified Copy of Priority Document(s)
- ☐ Response to Missing Parts/ Incomplete Application
  - ☐ Response to Missing Parts under 37 CFR 1.52 or 1.53
- ☐ Drawing(s)
- ☐ Licensing-related Papers
- ☐ Petition
- ☐ Petition to Convert to a Provisional Application
- ☐ Power of Attorney, Revocation, Change of Correspondence Address
- ☐ Terminal Disclaimer
- ☐ Request for Refund
- ☐ CD, Number of CD(s) _____
  - ☐ Landscape Table on CD
- ☐ After Allowance Communication to TC
- ☐ Appeal Communication to Board of Appeals and Interferences
- ☐ Appeal Communication to TC **(Appeal Notice, Brief, Reply Brief)**
- ☐ Proprietary Information
- ☐ Status Letter
- ☒ Other Enclosure(s) (please identify below):

Request for Certificate of Correction
PTO Form 1050
Return Postcard

Remarks:

SIGNATURE OF APPLICANT, ATTORNEY OR AGENT

Firm Name	RatnerPrestia		
Signature			
Printed Name	Lawrence E. Ashery		
Date	January 31, 2007	*Registration No.*	34,515

CERTIFICATE OF TRANSMISSION / MAILING

I hereby certify that this correspondence is being facsimile transmitted to the USPTO or deposited with the United States Postal Service with sufficient postage as first class mail in an envelope addressed to: Commissioner for Patents, P.O. Box 1450, Alexandria, VA 22313-1450 on the date shown below:

Signature	Deborah Spratt		
Typed or Printed Name	Deborah Spratt	*Date*	January 31, 2007

This collection of information is required by 37 CFR 1.5. The information is required to obtain or retain a benefit by the public which is to file (and by the USPTO to process) an application. Confidentiality is governed by 35 U.S.C. 122 and 37 CFR 1.11 and 1.14. This collection is estimated to take 2 hours to complete, including gathering, preparing, and submitting the completed application form to the USPTO. Time will vary depending upon the individual case. Any comments on the amount of time you require to complete this form and/or suggestions for reducing this burden, should be sent to the Chief Information Office, U.S. Patent and Trademark Office, U.S. Department of Commerce, P.O. Box 1450, Alexandria, VA 22313-1450. DO NOT SEND FEES OR COMPLETED FORMS TO THIS ADDRESS. **SEND TO: Commissioner for Patents, P.O. Box 1450, ALEXANDRIA, VA 22313-1450.**

If you need assistance in completing the form, call 1-800-PTO-9199 and select option 2.

FEB 0 9 2007
0 9 2007
0 9 2007

Claim
10/020,427

invention is not limited to the illustrated example. For example, the information may be written on a floppy disk as a different medium.

Furthermore, in the above embodiment, examples have been described wherein an elliptic function or an RSA function is applied to the digital signature or digital signature-like technique or encryption technique. However, the invention is not limited to the illustrated examples; rather, any other encryption technique may be used.

Moreover, in the above embodiment, the position information was encrypted or was provided with a digital signature, but instead, the position information itself may be written directly on the disk. In that case also, the invention is effective in preventing pirated disks from being made by copying the marking and its position information.

The optical disk of the invention has a structure such that a reflective film is sandwiched directly or indirectly between two members resistant to laser light and a marking is formed by laser on the reflective film. The above embodiment has described examples in which this structure is used for a piracy prevention technique, but it will be appreciated that such a structure may also be applied to other techniques. In the above embodiment, the optical disk of the invention has been described as being fabricated by laminating two substrates with an adhesive layer interposed therebetween. However, the adhesive layer may be omitted, or instead, a member made of a different material, such as a protective layer, may be used; that is, any suitable structure may be used as long as the reflective film is sandwiched directly or indirectly between two members resistant to laser light. Furthermore, in the above embodiment, the optical disk of the invention has been described as comprising substrates as the members that are laminated together, but other members such as protective layers may be used; that is, any member that has resistance to laser light may be used.

In the above embodiment, a combination of two kinds of cipher, secret key cipher and public key cipher, has been described as a representative example of a combination of multiple kinds of ciphers of different generations, but the invention is not limited to this particular example. For example, as an alternative combination of different generations, public key cipher having a 256-bit secret key, which is less secure but can be processed by a slow CPU, and public key cipher having a 1024-bit secret key, which provides great security but can only be processed by a high-speed CPU, may be used. In this way, with a combination of public key ciphers having different security levels, the same effect of preserving compatibility between different generations can be obtained. Furthermore, a combination of three kinds of ciphers of different generations, such as secret key cipher, low-security public key cipher, and high-security public key cipher, may also be used.

What is claimed is:

[1. A marking forming apparatus comprising:

marking forming means for applying at least one marking to at least one reflective film formed to a disk;

marking position detecting means for detecting at least one position of said marking; and

position information output means for outputting said detected position as position information of said marking.]

[2. A marking forming apparatus according to claim 1, further comprising position information writing means for writing at least said output position information or information concerning said position information to said disk or to a different medium.]

[3. A marking forming means according to claim 2, wherein said position information writing means includes encrypting means for encrypting at least said output position information or information concerning said position information, and writes contents thus encrypted to said disk.]

[4. A marking forming apparatus according to claim 3, wherein when the encrypting means performs the encryption, it uses a secret key of a public key encryption function.]

[5. A marking forming apparatus according to claim 3, wherein said encrypting means includes

first encrypting means for encrypting software feature information concerning features of software contents written to said disk and a sub public key of a public key encryption function by using a master secret key of said public key encryption function, and

second encrypting means for encrypting said position information or information concerning said position information by using a sub secret key corresponding to said sub public key,

and the writing at least said output position information or information concerning said position information means writing contents encrypted by said first encrypting means and contents encrypted by said second encrypting means to said disk.]

[6. A marking forming apparatus according to claim 2, wherein said position information writing means includes digital signature means for applying a digital signature to at least said output position information or information concerning said position information,

and the writing at least said output position information or information concerning said position information means writing information concerning a result of said digital signature application to said disk.]

[7. A marking forming apparatus according to claim 6, wherein when said digital signature means applies said digital signature, it uses a secret key of a public key encryption function.]

[8. A marking forming apparatus according to claim 6, wherein

said digital signature means includes

first digital signature means for applying a digital signature to software feature information concerning features of software contents written to said disk and to a sub public key of a public key encryption function by using a master secret key of said public key encryption function, and

second digital signature means for applying a digital signature to said position information or information concerning said position information by using a sub secret key corresponding to said sub public key,

and the writing at least said output position information or information concerning said position information means writing a result of the application of said digital signature by said first digital signature means and a result of the application of said digital signature by said second digital signature means to said disk.]

[9. A marking forming apparatus according to claim 2, wherein the position information writing means writes coexistently such informations that are processed by using plural kinds of encryption techniques or digital signature techniques with regard to a same position information.]

[10. A marking forming apparatus according to claim 4, 5, 7, or 8, wherein said public key encryption function is an RSA function or an elliptic function.]

[11. A marking forming apparatus according to claim 10, wherein said disk is constructed by laminating two disks together.]

[12. A method of forming a laser marking to an optical disk, comprising the steps of:

forming at least one disk;

forming a reflective film to said formed disk;

laminating two disks together, said disks including at least one disk with said reflective film formed thereon; and

forming at least one marking by a laser on said reflective layer of the laminated disks.]

[13. A reproduction apparatus comprising:

position information reading means for reading position information of at least one marking or information concerning said position information, said marking being formed to at least one reflective film formed to a disk and being detected for a position thereof, at least the position thus detected being output as said position information of said marking;

marking reading means for reading information concerning at least one actual position of said marking;

comparing/judging means for performing comparison and judgement by using a result of reading by said position information reading means and a result of reading by said marking reading means; and

reproducing means for reproducing recorded data on said optical disk in accordance with a result of the comparison and judgement performed by said comparing/judging means.]

[14. A reproduction apparatus according to claim 13, wherein at least said output position information or information concerning said position information is written to said disk by position information writing means.]

[15. A reproduction apparatus according to claim 14, wherein

said position information writing means includes encrypting means for encrypting at least said output position information or information concerning said position information, and

said position information reading means includes decrypting means corresponding to said encrypting means, and by using said decrypting means, decrypts said encrypted position information or information concerning said position information.]

[16. A reproduction apparatus according to claim 15, wherein when the encrypting means performs the encryption, it uses a secret key of a public key encryption function, and

said decrypting means performs the decryption by using a public key corresponding to said secret key.]

[17. A reproduction apparatus according to claim 15, wherein

said encrypting means includes

first encrypting means for encrypting software feature information concerning features of software contents written to said disk and a sub public key of a public key encryption function by using a master secret key of said public key encryption function, and

second encryption means for encrypting said position information or information concerning said position information by using a sub secret key corresponding to said sub public key,

and said decrypting means includes

first decrypting means for decrypting said encrypted software feature information and the encrypted sub public key of said public key encryption function, by using a master public key corresponding to said master secret key, and

second decrypting means for decrypting said encrypted position information or information concerning said position information by using the sub public key thus decrypted.]

[18. A reproduction apparatus according to claim 14, wherein

said position information writing means includes

digital signature means for applying a digital signature to at least said output position information or information concerning said position information, and writes information concerning a result of said digital signature application to said disk,

and said position information reading means includes

authenticating means corresponding to said digital signature means, and

position information extracting means for obtaining said position information from an authentication process performed by said authenticating means and/or from said information concerning the result of said digital signature application,

when an output indicating correctness of said authentication result is produced from said authenticating means, said comparing/judging means performs the comparison and judgement by using the position information obtained by said position information extracting means and the result of reading by said marking reading means, and when said output indicating correctness is not produced, the reproduction is not performed.]

[19. A reproduction apparatus according to claim 18, wherein

when said digital signature means applies said digital signature, it uses a secret key of a public key encryption function, and

said authenticating means performs said authentication by using a public key corresponding to said secret key.]

[20. A reproduction apparatus according to claim 18, wherein

said digital signature means includes

first digital signature means for applying a digital signature to software feature information concerning features of software contents written to said disk and to a sub public key of a public key encryption function by using a master secret key of said public key encryption function, and

second digital signature means for applying a digital signature to said position information or information concerning said position information by using a sub secret key corresponding to said sub public key,

and the writing at least said output position information or information concerning said position information means writing a result of the application of said digital signature by said first digital signature means and a result of the application of said digital signature by said second digital signature means to said disk,

wherein said position information reading means includes;

authenticating means for authenticating said digital signature-applied software feature information and sub public key of said public key encryption function, by using a master public key corresponding to said master secret key, and

position information extracting means for obtaining said position information from said authentication process thereof and/or from the result of said digital signature application by using the sub public key obtained from said authentication process and/or from the result of said digital signature application,

and when an output indicating correctness of said authentication result is produced from said authenticating means, said comparing/judging means performs the comparison and judgement by using the position information obtained by said position information extracting means and the result of reading by said marking reading means, and when said output indicating correctness is not produced, the reproduction is not performed.]

[21. A reproduction apparatus according to any one of claims 13 to 20, wherein the reproduction is not performed when, as a result of said comparison and judgement, the result of reading by said position information reading means and the result of reading by said marking reading means do not agree with each other.]

[22. A reproduction apparatus according to claim 16, 17, 19, or 20, wherein said public key encryption function is an RSA function or an elliptic function.]

[23. A method of manufacturing an optical disk, comprising the steps of:

forming at least one disk;

forming a reflective film to said formed disk;

applying at least one marking to said reflective film;

detecting at least one position of said marking; and

outputting said detected position as position information of said marking, and encrypting said information for writing to said disk.]

[24. A method of manufacturing an optical disk, comprising the steps of:

forming at least one disk;

forming a reflective film to said formed disk;

applying at least one marking to said reflective film;

detecting at least one position of said marking; and

outputting said detected position as position information of said marking, and applying a digital signature in relation to said position information for writing to said disk.]

[25. An optical disk wherein at least one marking is formed by a laser to at least one reflective film of the disk holding data written thereon and at least position information of said marking or information concerning said position information is written to said disk in an encrypted form or with a digital signature applied thereto.]

[26. An optical disk having a structure such that at least one reflective film is one of sandwiched directly and sandwiched indirectly between two members formed from material resistant to laser light,

wherein at least one marking is formed by a laser to said reflective film.]

[27. A marking forming apparatus according to claim 9, wherein said disk is constructed by laminating two disks together.]

28. An optical disk comprising:

a data zone having pits indicating data signals readable by light radiation;

a reflective layer formed on the data zone; and

portions of the reflective layer being trimmed forming markings,

wherein the markings form a barcode pattern indicating information and are formed on the pits on a track of the optical disk.

29. A method of manufacturing an optical disk comprising the steps of:

forming, on a substrate, a data zone having pits indicating data signals readable by light radiation;

forming a reflective layer on the data zone; and

trimming the reflective layer to form markings on the pits on a track of the optical disk;

wherein the markings form a barcode pattern indicating information.

* * * * *

UNITED STATES PATENT AND TRADEMARK OFFICE

COMMISSIONER FOR PATENTS
UNITED STATES PATENT AND TRADEMARK OFFICE
WASHINGTON, D.C. 20231
www.uspto.gov

COPY MAILED

Paper No. 4

MAY 2 0 2002

OFFICE OF PETITIONS

BOZICEVIC, FIELD & FRANCIS LLP
200 MIDDLEFIELD RD
SUITE 200
MENLO PARK, CA 94025

In re Application of
Taylor
Application No. 10/020,451
Filed: December 14, 2001
Attorney Docket No.: GUID003CON3

ON PETITION

This is a decision on the petition filed March 1, 2002 in response to the Notice of Omitted Item(s) in a Nonprovisional Application ("Notice") mailed January 24, 2002.

The application was filed December 14, 2001. On January 24, 2002, the Office of Initial Patent Examination mailed a Notice stating that the application had been accorded a filing date but that figures 9 and 9A appeared to have been omitted from the application.

The Notice permits applicant to either: (1) promptly establish prior receipt in the PTO of the drawing(s) at issue (generally by way of a date-stamped postcard receipt (MPEP 503)), or (2) promptly submit the omitted drawing(s) in a nonprovisional application and accept the date of such submission as the application filing date. An applicant asserting that the missing drawings were in fact deposited in the PTO with the application papers must file a petition (and the appropriate petition fee) with evidence of such deposit. An applicant desiring to submit the omitted drawings in a nonprovisional application and accept the date of such submission as the application filing date must file any omitted drawing(s) with an oath or declaration in compliance with 37 CFR 1.63 and 1.64 referring to such drawing(s) and a petition under 37 CFR 1.182 (with the petition fee under 37 CFR 1.17(h)) requesting the later filing date within two months of the date of the Notice (37 CFR 1.181(f)).

Petitioner argues that the application filed December 14, 2001 included seven (7) pages of formal drawings, including Figures 9 and 9A, as indicated on the Office date-stamped return postcard, a copy of which petitioner has provided.

Upon review of the record, figures 9 and 9A have been located in the application file. Therefore, the application was complete on filing.

In view of the above, the petition is **GRANTED**.

The Notice mailed January 24, 2002, was sent in error and is hereby **VACATED**.

No fee is due in connection with this matter. As per the authorization contained therein, a refund to deposit account No. 50-0815 has been requested from the Office of Finance, Refund Section.

This application will be returned to the Office of Initial Patent Examination for further processing with a filing date of December 14, 2001 with an indication in the record that figures 9 and 9A were present on filing.

Telephone inquiries related to this decision may be directed to Petitions Attorney Alesia M. Brown at (703) 305-0310.

Beverly M. Flanagan
Supervisory Petitions Examiner
Office of Petitions
Office of the Deputy Commissioner
for Patent Examination Policy

UNITED STATES PATENT AND TRADEMARK OFFICE

Commissioner for Patents
United States Patent and Trademark Office
P.O. Box 1450
Alexandria, VA 22313-1450
www.uspto.gov

PATRICIA A. COBURN
BATTELLE PULMONARY THERAPEUTICS, INC.
SUITE 100
1801 WATERMARK DRIVE
COLUMBUS OH 43215

COPY MAILED

JUL 0 7 2005

OFFICE OF PETITIONS

In re Application of :
William C. Tacon et al. :
Application No. 10/020,464 : ON PETITION
Filed: November 30, 2001 :
Attorney Docket No. 12905 :

This is a decision on the petition filed March 16, 2005, to revive the above identified application under 37 CFR 1.137(b)[1].

The petition under 37 CFR 1.137(b) is **GRANTED**.

This application became abandoned on July 17, 2004, for failure to file a timely response to a Restriction Requirement mailed June 16, 2004, which set a one month shortened statutory period for reply. No extensions of the time for reply under 37 CFR 1.136(a) were obtained. Accordingly, a Notice of Abandonment was mailed January 7, 2005.

The petition fee in the amount of $750.00 has been applied to the finance records for the instant patent application.

The response to the Restriction Requirement filed March 16, 2005 will be referred to Technology Center 1651 for further processing.

Telephone inquiries concerning this matter may be directed to the undersigned Petitions Attorney at (571) 272-3212.

Patricia Faison-Ball
Senior Petitions Attorney
Office of Petitions

---

[1]Effective December 1, 1997, the provisions of 37 CFR 1.137(b) now provide that where the delay in reply was unintentional, a petition may be filed to revive an abandoned application or a lapsed patent pursuant to 37 CFR 1.137(b). A grantable petition filed under the provisions of 37 CFR 1.137(b) must be accompanied by:

(1) the required reply, unless previously filed. In a nonprovisional application abandoned for failure to prosecute, the required reply may be met by the filing of a continuing application. In an application or patent, abandoned or lapsed for failure to pay the issue fee or any portion thereof, the required reply must be the payment of the issue fee or any outstanding balance thereof.

(2) the petition fee as set forth in 37 CFR 1.17(m);

(3) a statement that the entire delay in filing the required reply from the due date for the reply until the filing of a grantable petition pursuant to 37 CFR 1.137(b) was unintentional. The Commissioner may required additional information where there is a question whether the delay was unintentional; and

(4) any terminal disclaimer (and fee as set forth in 37 CFR 1.20(d)) required pursuant to 37 CFR 1.137(c)).

UNITED STATES PATENT AND TRADEMARK OFFICE

UNDER SECRETARY OF COMMERCE FOR INTELLECTUAL PROPERTY AND
DIRECTOR OF THE UNITED STATES PATENT AND TRADEMARK OFFICE
WASHINGTON, DC 20231
www.uspto.gov

MAILED

JUL 09 2002

DIRECTOR'S OFFICE
TECHNOLOGY CENTER 3600

Greenberg-Traurig
1750 Tysons Boulevard,
12th Floor
McLean, VA 22102

Paper No. 5

In re application of
C. Colby Conkwright et al.
Application No. 10/020,512
Filed: December 18, 2001
For: PRIVACY COMPLIANT MULTIPLE DATASET CORRELATION AND CONTENT DELIVERY SYSTEM AND METHODS

: **DECISION ON PETITION**
: **TO MAKE SPECIAL**
: **(ACCELERATED EXAMINATION)**

This is in response to the petition filed on June 17, 2002 to make the above-identified application special on the basis of special examining procedure for certain new applications - accelerated examination as set forth in MPEP § 708.02 VIII.

The requirements for granting special status under this section are: (A) a petition to make special accompanied by the fee set forth in 37 CFR 1.17(i); (B) all claims being directed to a single invention, or an election without traverse if the Office determines that all the claims are not directed to a single invention; (C) a statement that a pre-examination search was made listing the field of search; (D) one copy of each of the references deemed most closely related to the subject matter encompassed by the claims if said references are not already of record; and (E) a detailed discussion of how the claimed subject matter is patentable over the references.

Since all of the requirements for special status under MPEP § 708.02 VIII have been met, the petition is **GRANTED**.

The examiner is directed (1) to make an interference search for possible interfering applications, (2) to promptly examine this application out of turn, and (3) if any interfering application is discovered, to examine such application simultaneously and state in the first official letter of such application that it is being taken out of turn because of a possible interference.

Petitioner is advised that this application will continue to be special, throughout its entire prosecution and pendency, including interference or appeal, if any, only if petitioner makes a prompt ***bona fide*** effort, in response to each Office action, to place the application in condition for allowance, even if it is necessary to conduct an interview with the examiner to accomplish this purpose.

SUMMARY: Petition to Make Special **GRANTED**.

Steven N. Meyers
Special Programs Examiner
Technology Center 3600
(703) 308-3868

SNM: 7/8/02

UNITED STATES PATENT AND TRADEMARK OFFICE

COMMISSIONER FOR PATENTS
UNITED STATES PATENT AND TRADEMARK OFFICE
P.O. BOX 1450
ALEXANDRIA, VA 22313-1450
www.uspto.gov

DDD 11/17

Raymond Ho
Arent Fox Kintner Plotkin & Kahn, PLLC
1050 Connecticut Avenue, N.W.
Suite 400
Washington DC 20036-5339

Paper No. 11

NOV 1

Office of the Group

In re Application of
Katsutoshi Ando et al.
Application No. 10/020,514
Filed: December 18, 2001
Attorney Docket No. 108421-00030
For: Bolt Structure For Use With Magnesium Alloy Member For Tightening Magnesium Alloy Members With Each Other Or With A Heterogeneous Material

DECISION ON PETITION TO ACCEPT COLOR PHOTOGRAPHS UNDER 37 CFR § 1.84(b)(2)

This letter is in response to Applicants' Petition filed September 30, 2003, for acceptance of color photographs.

The requirements for the granting of such a petition include:

i) The fee set forth in § 1.17(h);
ii) Three sets of color photographs;
iii) A black and white photocopy that accurately depicts, to the extent possible, the subject matter shown in the color photographs;
iv) An amendment to the specification to insert (unless the specification contains or has been previously been amended to contain) the language as the first paragraph of the brief description of the drawings: The patent or application file contains at least one drawing executed in color. Copies of this patent or patent application publication with color drawing(s) will be provided by the Office upon request and payment of the necessary fee.
v) An explanation as to why the color photographs are necessary per 37 CFR § 1.84(a)(2).

Applicants' petition requesting consideration acceptance of the color photographs satisfies requirements i)-iv) above.

However, Applicant's petition fails to give an explanation as to why the color photographs are necessary. 37 C.F.R. § 1.84(b)(2) requires that all conditions for accepting color drawings and black and white photographs have been satisfied. 37 C.F.R. § 1.84(a)(2) sets forth these conditions:

> (2) Color. On rare occasions, color drawings may be necessary **as the only practical medium by which to disclose the subject matter sought to be patented** in a utility or design patent application or the subject matter of a statutory invention registration. The color drawings must be of sufficient quality such that all details in the drawings are reproducible in black and white in the printed patent. Color drawings are not permitted in international applications (see PCT Rule 11.13), or in an application, or copy thereof, submitted under the Office electronic filing system. The Office will accept color drawings in utility or design patent applications and statutory invention registrations only after granting a petition filed under this paragraph **explaining why the color drawings are necessary**. Any such petition must include the following:
> (i) The fee set forth in § 1.17(h);
> (ii) Three (3) sets of color drawings;
> (iii) A black and white photocopy that accurately depicts, to the extent possible, the subject matter shown in the color drawing; and
> (iv) An amendment to the specification to insert (unless the specification contains or has been previously amended to contain) the following language as the first paragraph of the brief description of the drawings: The patent or application file contains at least one drawing executed in color. Copies of this patent or patent application publication with color drawing(s) will be provided by the Office upon request and payment of the necessary fee.

Applicant's petition fails to give any explanation as to why color photographs are the only practical medium by which to disclose the subject matter sought to be patented, thus, failing to explain why the color photographs are necessary.

Accordingly, the petition is **Dismissed**.

Lynne Browne
Supervisory Patent Examiner
Technology Center 3600

UNITED STATES PATENT AND TRADEMARK OFFICE

COMMISSIONER FOR PATENTS
UNITED STATES PATENT AND TRADEMARK OFFICE
P.O. BOX 1450
ALEXANDRIA, VA 22313-1450
www.uspto.gov

MAILED

NOV 14 2003

Office of the Director
Group 3600

Raymond Ho
Arent Fox Kintner Plotkin & Kahn, PLLC
1050 Connecticut Avenue, N.W.
Suite 400
Washington DC 20036-5339

Paper No. 12

In re Application of
Katsutoshi Ando et al.
Application No. 10/020,514
Filed: December 18, 2001
Attorney Docket No. 108421-00030
For: Bolt Structure For Use With
Magnesium Alloy Member For Tightening
Magnesium Alloy Members With Each
Other Or With A Heterogeneous Material

DECISION ON PETITION TO ACCEPT COLOR PHOTOGRAPHS UNDER 37 CFR § 1.84(b)(2)

This letter is in response to Applicants' Petition filed September 30, 2003, for acceptance of color photographs.

The requirements for the granting of such a petition include:

i) The fee set forth in § 1.17(h);
ii) Three sets of color photographs;
iii) A black and white photocopy that accurately depicts, to the extent possible, the subject matter shown in the color photographs;
iv) An amendment to the specification to insert (unless the specification contains or has been previously been amended to contain) the language as the first paragraph of the brief description of the drawings: The patent or application file contains at least one drawing executed in color. Copies of this patent or patent application publication with color drawing(s) will be provided by the Office upon request and payment of the necessary fee.
v) An explanation as to why the color photographs are necessary per 37 CFR § 1.84(a)(2).

Applicants' petition requesting consideration acceptance of the color photographs satisfies requirements i)-iv) above.

However, Applicant's petition fails to give an explanation as to why the color photographs are necessary. 37 C.F.R. § 1.84(b)(2) requires that all conditions for accepting color drawings and black and white photographs have been satisfied. 37 C.F.R. § 1.84(a)(2) sets forth these conditions:

> (2) Color. On rare occasions, color drawings may be necessary **as the only practical medium by which to disclose the subject matter sought to be patented** in a utility or design patent application or the subject matter of a statutory invention registration. The color drawings must be of sufficient quality such that all details in the drawings are reproducible in black and white in the printed patent. Color drawings are not permitted in international applications (see PCT Rule 11.13), or in an application, or copy thereof, submitted under the Office electronic filing system. The Office will accept color drawings in utility or design patent applications and statutory invention registrations only after granting a petition filed under this paragraph **explaining why the color drawings are necessary**. Any such petition must include the following:
> (i) The fee set forth in § 1.17(h);
> (ii) Three (3) sets of color drawings;
> (iii) A black and white photocopy that accurately depicts, to the extent possible, the subject matter shown in the color drawing; and
> (iv) An amendment to the specification to insert (unless the specification contains or has been previously amended to contain) the following language as the first paragraph of the brief description of the drawings: The patent or application file contains at least one drawing executed in color. Copies of this patent or patent application publication with color drawing(s) will be provided by the Office upon request and payment of the necessary fee.

Applicant's petition fails to give any explanation as to why color photographs are the only practical medium by which to disclose the subject matter sought to be patented, thus, failing to explain why the color photographs are necessary.

Accordingly, the petition is **Dismissed**.

Lynne Browne
Supervisory Patent Examiner
Technology Center 3600

UNITED STATES PATENT AND TRADEMARK OFFICE

UNITED STATES DEPARTMENT OF COMMERCE
United States Patent and Trademark Office
Address: COMMISSIONER FOR PATENTS
P.O. Box 1450
Alexandria, Virginia 22313-1450
www.uspto.gov

APPLICATION NO.	FILING DATE	FIRST NAMED INVENTOR	ATTORNEY DOCKET NO.	CONFIRMATION NO.
10/020,514	12/18/2001	Katsutoshi Ando	108421-00030	8749

4372 7590 05/10/2005

ARENT FOX PLLC
1050 CONNECTICUT AVENUE, N.W.
SUITE 400
WASHINGTON, DC 20036

EXAMINER
WILSON, NEILL R

ART UNIT	PAPER NUMBER
3679	

DATE MAILED: 05/10/2005

Please find below and/or attached an Office communication concerning this application or proceeding.

UNITED STATES PATENT AND TRADEMARK OFFICE

Commissioner for Patents
United States Patent and Trademark Office
P.O. Box 1450
Alexandria, VA 22313-1450
www.uspto.gov

Rhonda L. Barton
Arent Fox Kintner Plotkin & Kahn, PLLC
1050 Connecticut Ave., N. W.
Suite 400
Washington, D.C. 20036-5339

January 5, 2005

In re Application of	:	
Katsutoshi Ando et al.	:	DECISION ON PETITION TO
Application No. 10/020514	:	ACCEPT COLOR PHOTOGRAPHS
Filed: December 18, 2001	:	UNDER 37 CFR 1.84(b)(2)
Attorney Docket No. 108421-00030	:	
For: Bolt Structure For Use With	:	
Magnesium Alloy Member For Tightening	:	
Magnesium Alloy Members With Each	:	
Other Or With A Heterogeneous Material	:	

This letter is in response to Applicant's renewed Petition filed January 12, 2004, for reconsideration of the petition to accept color photographs.

The requirements for the granting of such a petition include:

i) The fee set forth in 1.17(h);
ii) Three sets of color photographs;
iii) A black and white photocopy that accurately depicts, to the extent possible, the subject matter shown in the color photographs;
iv) An amendment to the specification to insert (unless the specification contains or has been previously amended to contain) the language as the first paragraph of the brief description of the drawings: The patent or application file contains at least one drawing executed in color. Copies of this patent or patent application publication with color drawing(s) will be provided by the Office upon request and payment of the necessary fee;
v) An explanation as to why the color photographs are necessary per 37 CFR 1.84(a)(2).

Applicants' petition requesting acceptance of the color photographs satisfies requirements i)-v) above.

Accordingly, the petition is **GRANTED**.

J. J. Swann
Supervisory Patent Examiner
Art Unit 3677

UNITED STATES PATENT AND TRADEMARK OFFICE

COMMISSIONER FOR PATENTS
UNITED STATES PATENT AND TRADEMARK OFFICE
P.O. BOX 1450
ALEXANDRIA, VA 22313-1450
www.uspto.gov

Paper No. 8

KLARQUIST SPARKMAN, LLP
121 SW SALMON STREET
SUITE 1600
PORTLAND OR 97204

COPY MAILED
SEP 3 0 2003
OFFICE OF PETITIONS

In re Application of
Nicholas E. Bratt et al.
Application No. 10/020,518
Filed: December 14, 2001
Attorney Docket No. 6580-61415
Title: HYBRID OPTICAL TRANSCEIVERS FOR FREE SPACE OPTICAL COMMUNICATION

DECISION ON PETITION
UNDER 37 C.F.R. §1.137(f)

This is a decision on the petition filed on July 25, 2003, pursuant to 37 C.F.R. §1.137(f), to revive the above-identified application.

A grantable petition pursuant to 37 CFR 1.137(f) must be accompanied by:

(1) Notification of the filing of an application in a foreign country or under a multinational treaty that requires 18 month publication[1];
(2) The petition fee as set forth in 37 C.F.R. § 1.17(m), and;
(3) A statement that the entire delay in filing the notice from the date that the notice was due under 35 U.S.C. §122(b)(2)(B)(iii) until the date the notice was filed was unintentional. The Commissioner may require additional information where there is a question whether the delay was unintentional.

Petitioner states that the instant nonprovisional application is the subject of an application filed in a foreign or international application on December 13, 2002. However, the United States Patent and Trademark Office was unintentionally not notified of this filing within 45 days subsequent to the filing of the subject application in a foreign country.

1 See PTO/SB/36 and paragraph on PTO/SB/64a for further information. Both may be downloaded at http://www.uspto.gov/web/forms/index.html.

On December 19, 2002, a Notice of Rescission of Nonpublication Request was filed with the Office. Unfortunately, notification of the filing of the international application did not accompany this filing.

In view of the above, this application became abandoned pursuant to 35 U.S.C. §1.22(b)(2)(B)(iii) and 37 C.F.R. §1.213(c) for failure to timely notify the Office of the filing of either a foreign application or an application under a multilateral international agreement that requires publication of applications 18 months after filing. Petitioner's assertions that the application was not abandoned are incorrect.

37 C.F.R. §1.137(f) requires a statement that the entire delay in filing the notice from the date that the notice was due under 35 U.S.C. §122(b)(2)(B)(iii) until the date the notice was filed was unintentional. Since the statement contained in the instant petition varies from the language required by 37 C.F.R. §1.137(f), the statement contained in the instant petition is being construed as the statement required by 37 C.F.R. §1.137(f) and petitioner must notify the Office if this is not a correct interpretation of the statement contained in the instant petition.

The petition under 37 C.F.R. §1.137(f) is **GRANTED**.

Petitioner has submitted the notification of a foreign or international filing, paid the petition fee, and has made a statement which is being construed as the proper statement of unintentional delay.

The instant petition has been found to be in compliance with 37 C.F.R. §1.137(f). Accordingly, the failure to timely notify the Office of a foreign or international filing within 45 days after the date of filing of such foreign or international application as provided by 35 U.S.C. §122(b)(2)(B)(iii) and 37 C.F.R. §1.213(c) is accepted as having been unintentionally delayed.

The previous Request and Certification under 35 U.S.C. §122(b)(2)(B)(i), filed with the original application papers, has been rescinded. A Notice Regarding Rescission of Nonpublication Request which sets forth the projected publication date of January 8, 2004 accompanies this decision on petition.

After this decision is mailed, the application will be forwarded to Technology Center 2800 for further processing.

Telephone inquiries concerning *this decision* should be directed to Attorney Paul Shanoski at (703) 305-0011.

Paul Shanoski
Attorney
Office of Petitions
United States Patent and Trademark Office

UNITED STATES PATENT AND TRADEMARK OFFICE

COMMISSIONER FOR PATENTS
UNITED STATES PATENT AND TRADEMARK OFFICE
WASHINGTON, D.C. 20231
www.uspto.gov

Paper No. 8

COPY MAILED

JUL 1 8 2002

OFFICE OF PETITIONS

MERCHANT & GOULD P.C.
PO BOX 2903
MINNEAPOLIS, MN 55402-0903

In re Application of
Koelle et al.
Application No. 10/020,524
Filed: December 14, 2001
Attorney Docket No. 50040.01USU1

DECISION ACCORDING
STATUS UNDER
37 CFR 1.47(a)

This is a decision on the petition under 37 CFR 1.47(a), filed on March 8, 2002, requesting that an inventor be allowed to file the application on behalf of herself and the joint-inventor who allegedly refuses to join in this application.

The petition is **GRANTED.**

There are 2 joint-inventors for the claimed invention in this application: Katharina Veronika Koelle ("Koelle") and William P. Worzel ("Worzel"). The application as filed on December 14, 2001 did not include a properly signed oath/declaration as required by 37 CFR 1.51(b)(2) and as specified in 37 CFR 1.63. On January 14, 2002, the Office of Initial Patent Examination (OIPE) mailed a Notice to File Missing Parts of Nonprovisional Application, giving Applicants an extendable, non-statutory 2-month period within which to submit, *inter alia*,[1] an oath/declaration signed by both inventors. In response, the instant petition was filed, requesting that a "Combined Declaration and Power of Attorney" signed only by Koelle be accepted, such that Koelle may make this application on behalf of herself and Worzel who allegedly refuses to join in this application.

Koelle may file this application on behalf of herself as well as Worzel, if it can be properly shown that a *bona fide* attempt has been made to present to Worzel, for signature, a copy of the entire application, including the specification, claims, drawings, and declaration; and that the latter refuses to join in this application.[2] Such showing includes, but is not limited to, a statement of facts regarding the circumstances of the presentation of the application papers as well as the subsequent refusal.[3] Worzel's last known address must also be included in the petition under 37 CFR 1.47(a).[4]

The instant petition is supported by a "Declaration Under 37 CFR 1.47(a) Regarding Non-Signing Inventor" of John W. Branch, counsel for Assignee ("Branch") ("Branch Declaration"). According to the Branch Declaration, which is essentially a statement of facts:

-Branch's firm contacted Worzel by e-mail or U.S. Postal Service certified mail on 5

---

1 Other missing items include the application basic filing fee and extra claims fees. See *infra*.

2 See also MPEP section 409.03(d) (Aug. 2001), REFUSAL TO JOIN.

3 See MPEP section 409.03(d) (Aug. 2001).

4 See 37 CFR 1.47(a), and MPEP sections 409.03(e), 605.03 (Aug. 2001). Included in the petition, paragraph 19.

occasions,[5] 3 of which included transmission/enclosure of a copy of the application papers;[6]
-Worzel has acknowledged receipt of the application papers sent by counsel's firm;[7]
-Worzel refuses to sign the application papers.[8]

The above statement of facts by Branch demonstrates that a *bona fide* attempt had been made to present to Worzel a copy of the entire application, and that Worzel has refused to join in this application. The petition is thus granted and Koelle is allowed to file this application on behalf of herself and of Worzel. The "Combined Declaration and Power of Attorney" signed only by Koelle is hereby accepted.

The following are enclosed with the instant petition: a $130 check for the petition fee; a $1,248 check for the $130 surcharge for the declaration, the $740 basic filing fee for this application, the $126 for 7 claims in excess of 20, and the $252 for 3 independent claims in excess of 3, totaling $1,248. In addition, Deposit Account No. 13-2725 has been charged the $130 surcharge for late filing of the application basic filing fee.[9]

As provided in 37 CFR 1.47(c), the Office will forward notice of the filing of this application to Worzel at his last known address stated in the petition: 214 W. Main Street, Milan, MI 48160. Notice of the filing of this application will also be published in the Official Gazette.

The application file is being returned to OIPE for further processing. Thereafter, it will be forwarded to the appropriate Technology Center for examination in due course.[10]

Telephone inquiries concerning this decision should be directed to Petitions Attorney RC Tang at (703) 308-0763.

Beverly M. Flanagan
Supervisory Petitions Attorney
Office of Petitions
Office of the Deputy Commissioner
for Patent Examination Policy

---

[5] Branch Declaration, paragraphs 5, 7, 12, 14, 15 [12/10/01 (e-mail); 12/10/01; 1/7/02 (e-mail); 1/23/02 (e-mail); 1/23/02].
Attorney Branch confirmed in a 7/3/02 telephone call with the Office that Branch's assistant, Jamie Wiegand, made the stated contacts with Worzel as instructed by, and under the supervision of, Branch.

[6] Branch Declaration, paragraphs 5, 7, 15 [12/10/01 (e-mail); 12/10/01; 1/23/02].

[7] Branch Declaration, paragraphs 10 [Worzel's signing for the 12/10/01 mail on 12/22/01], 13 [Worzel's 1/7/02 e-mail to counsel's firm], 17 [Worzel's 1/29/02 e-mail to counsel's firm].

[8] Branch Declaration, paragraph 17 [Worzel's 1/29/02 e-mail to counsel's firm].

[9] 37 CFR 1.16(e).

[10] Receipt is acknowledged of an Information Disclosure Statement on 3/22/02, and a Preliminary Amendment on 4/29/02.

UNITED STATES PATENT AND TRADEMARK OFFICE

COMMISSIONER FOR PATENTS
UNITED STATES PATENT AND TRADEMARK OFFICE
WASHINGTON, D.C. 20231
www.uspto.gov

William P. Worzel
214 W. Main Street
Milan, MI 48160

COPY MAILED
JUL 1 8 2002
OFFICE OF PETITIONS

In re Application of
Koelle et al.
Application No. 10/020,524
Filed: December 14, 2001
For: METHOD AND APPARATUS FOR PROTECTION OF ELECTRONIC MEDIA

LETTER

Dear Mr. Worzel,

You are named as a joint inventor in the above identified United States patent application, filed under the provisions of 35 U.S.C. 116 (United States Code), and 37 CFR 1.47(a) (Rules of Practice for the United States Patent and Trademark Office [USPTO]). Should a patent be granted on the application, you will be designated therein as a joint inventor.

As a named inventor, you are entitled to inspect any paper in the file wrapper of the application, order copies of all or any part thereof (at a prepaid cost pursuant to 37 CFR 1.19), or make your position of record in the application. Alternatively, you may do any of the aforementioned through an attorney or agent registered to practice before the USPTO and presenting written authorization from you. If you care to join in the application, counsel of record (see below) would presumably assist you. Joining in the application would entail the filing of an appropriate oath or declaration by you pursuant to 37 CFR 1.63.

Requests for information regarding this application should be directed to the File Information Unit at (703) 308-2733. For information on how to order a copy of the application or a specific paper in the application, contact the Certification Division at (703) 308-9726 or 1-(800) 972-6382 (outside the Washington DC area). Telephone inquiries regarding this letter should be directed to Petitions Attorney RC Tang at (703) 308-0763.

Beverly M. Flanagan
Supervisory Petitions Attorney
Office of Petitions
Office of the Deputy Commissioner
for Patent Examination Policy

cc: John W. Branch, Esq.
Merchant & Gould P.C.
PO Box 2903
Minneapolis, MN 55402-0903

Jamie Wiegand

From: billw@genetics2.com
Sent: Tuesday, January 29, 2002 10:00 AM
To: Jamie Wiegand
Cc: jbeyer@widevine.com
Subject: Re: 50040.1USU1 - Status of Signed Formal Documents from Inventor & Updated Formal Documents
Signed By: (There were errors displaying the signers of this message, please click on the signature icon for more details.)

Mister Wiegand,

Having received your documents, and having reluctantly returned to considering this patent, I read your quaint assignment document. I was particularly charmed by the paragraph that reads:

"AND, for the consideration aforesaid, we do hereby agree that we and our executors and legal representatives will make, execute and deliver any and all other instruments in writing including any and all further application papers, affidavits, assignments and other documents, and will communicate to said Assignee, its successors and representatives all facts known to us relating to said improvements and the history thereof and will testify in all legal proceedings and generally do all things which may be necessary or desirable more effectually to secure to and vest in said Assignee, its successors or assigns the entire right, title and interest in and to the improvements, inventions, applications, Letters Patent, rights, titles, benefits, privileges and advantages hereby sold, assigned and conveyed, or intended so to be."

Now, in the first instance, I will not "make, execute and deliver" a damned thing on behalf of Widevine ever again. My contract with Widevine obligated me to assign work done while I was in Widevine's employee; it most assuredly does *not* obligate me for the fee of one dollar and other similarly valuable considerations (such as Widevine stock) to do any further work once I am no longer an employee. Nor does it obligate me to testify on behalf of the company without proper recompense for my time now that they are most fortunately no longer my employer.

So, I suggest you get in touch with your principal and inform them that while I will assign the patent to Widevine, I will not do anything else that requires me to spend even a minute more of my time without recompense and therefore will not sign an assignment that requires me to do so.

At this point in time, my minimum fee for such obnoxious and unpleasant work is $200/hr, payable in advance, and is likely to go up as time passes and I become even less concerned with Widevine and its machinations.

Most Sincerely,
Bill Worzel

January 23, 2002

To: William P. Worzel

Re: 50040.1USU1 - Status of Signed Formal Documents from Inventor & Updated Formal Documents

Bill:

Please discard the prior electronic copies of the formal documents and use the updated copies attached in this email. The earlier documents were intended to be filed concurrent with the filing of the application. The attached copies should now be used, as they reflect the filing date and serial number of the application filed 12/14/2001, and are to be used after an application has been filed.

As stated in the ealier email, we have not received from you the formal documents that we asked you to sign for the above-identified matter. We understand that these documents were received by you through certified mail on December 22, 2001.

Recently, our office received a Notice to File Missing Parts from the U.S. Patent and Trademark Office (USPTO), which included a request for the signed formal document, from you.

At this time, are you willing to sign the formal documents and

return them to us? Kindly advi[illegible] s of your intentions.

If you will sign the revised formal documents, please return the signed updated documents to me, no later than February 5, 2002.

I have attached a set of electronic copies of the updated formal documents for your signatures.

<<Dec and POA-MP.pdf>> <<Assignment-MP.pdf>>

Sincerely,

Jamie Wiegand
Merchant & Gould PC
1191 Second Avenue, Suite 1500
Seattle, WA 98101
(206) 342-6200 main
(206) 342-6288 direct
(206) 342-6201 fax
jwiegand@merchant-gould.com
Note: This email message is confidential, and may be privileged, or otherwise protected by law. If you are not the intended recipient, you should: (1) Reply via e-mail to sender; (2) Destroy this communication entirely, including deletion of all associated text files from all individual and network storage devices; and (3) Refrain from copying or disseminating this communication by any means whatsoever. Thank you.

Attachment converted: Phenotype IV:Dec and POA-MP.pdf (PDF /CARO) (000452FA)
Attachment converted: Phenotype IV:Assignment-MP.pdf (PDF /CARO) (000452FB)

--
Bill Worzel
Chief Technical Officer
Genetics2
<mailto: billw@genetics2.com>
Tel: 734-439-3828
Fax: 734-439-8539

UNITED STATES
PATENT AND
TRADEMARK OFFICE

FEBRUARY 14, 2002

PTAS

Under Secretary of Commerce For Intellectual Property and
Director of the United States Patent and Trademark Office
Washington, DC 20231
www.uspto.gov

MERCHANT & GOULD P.C.
JOHN W. BRANCH
P.O. BOX 2903
MINNEAPOLIS, MN 55402-0903

101927437A

UNITED STATES PATENT AND TRADEMARK OFFICE
NOTICE OF RECORDATION OF ASSIGNMENT DOCUMENT

THE ENCLOSED DOCUMENT HAS BEEN RECORDED BY THE ASSIGNMENT DIVISION OF THE U.S. PATENT AND TRADEMARK OFFICE. A COMPLETE MICROFILM COPY IS AVAILABLE AT THE ASSIGNMENT SEARCH ROOM ON THE REEL AND FRAME NUMBER REFERENCED BELOW.

PLEASE REVIEW ALL INFORMATION CONTAINED ON THIS NOTICE. THE INFORMATION CONTAINED ON THIS RECORDATION NOTICE REFLECTS THE DATA PRESENT IN THE PATENT AND TRADEMARK ASSIGNMENT SYSTEM. IF YOU SHOULD FIND ANY ERRORS OR HAVE QUESTIONS CONCERNING THIS NOTICE, YOU MAY CONTACT THE EMPLOYEE WHOSE NAME APPEARS ON THIS NOTICE AT 703-308-9723. PLEASE SEND REQUEST FOR CORRECTION TO: U.S. PATENT AND TRADEMARK OFFICE, ASSIGNMENT DIVISION, BOX ASSIGNMENTS, CG-4, 1213 JEFFERSON DAVIS HWY, SUITE 320, WASHINGTON, D.C. 20231.

RECORDATION DATE: 12/14/2001

REEL/FRAME: 012390/0507
NUMBER OF PAGES: 3

BRIEF: ASSIGNMENT OF ASSIGNOR'S INTEREST (SEE DOCUMENT FOR DETAILS).

ASSIGNOR:
KOELLE, KATHARINA VERONIKA

DOC DATE: 12/08/2001

ASSIGNEE:
WIDEVINE TECHNOLOGIES, INC.
900 FOURTH AVENUE, SUITE 3400
SEATTLE, WASHINGTON 98164

SERIAL NUMBER: 10020524
PATENT NUMBER:

FILING DATE: 12/14/2001
ISSUE DATE:

MARCUS KIRK, EXAMINER
ASSIGNMENT DIVISION
OFFICE OF PUBLIC RECORDS

12-28-2001

101927437

FORM PTO-1595
(Rev. 6-93)
OMB No. 0651-0011 (exp. 4/94)
M&G- 50040.01USU1

U.S. DEPARTMENT OF COMMERCE
Patent and Trademark Office

To the Commissioner of Patents and Trademarks: Please record the attached original documents or copy thereof.

1. Name of conveying party(ies):

Katharina Veronika Koelle

12-14-01

Additional name(s) of conveying party(ies) attached? ☐ Yes ☒ No

2. Name and address of receiving party(ies):

Widevine Technologies, Inc.
900 Fourth Avenue, Suite 3400
Seattle, Washington 98164

J1036 U.S. PTO 10/020524 12/14/01

Additional name(s) & address(es) attached? ☐ Yes ☒ No

3. Nature of conveyance:
☒ Assignment
☐ Security Agreement
☐ Other:
☐ Merger
☐ Change of Name

Execution Date: December 8, 2001.

4. Application number(s) or patent number(s):

If this document is being filed together with a new application, the execution date of the application is: December 14, 2001.

A. Patent Application No.(s) 10,020524

B. Patent No.(s)

Additional numbers attached? ☐ Yes ☒ No

5. Name and address of party to whom correspondence concerning document should be mailed:

Name: John W. Branch
Address: Merchant & Gould P.C.
P.O. Box 2903
Minneapolis, MN 55402-0903

23552
PATENT TRADEMARK OFFICE

6. Total number of applications and patents involved: 1

7. Total fee (37 CFR 3.41): $40.00
☒ Enclosed
☐ Authorized to be charged to deposit account

8. Please charge any additional fees or credit any overpayments to our Deposit account number: 13-2725

DO NOT USE THIS SPACE

9. Statement and signature:

To the best of my knowledge and belief, the foregoing information is true and correct and any attached copy is a true copy of the original document.

John W. Branch, Reg. No. 41,633
Name of Person Signing

Signature

December 14, 2001
Date

Total number of pages including cover sheet, attachments, and document: 3

Do not detach this portion

Mail documents to be recorded with required cover sheet information to:
Box Assignments
Director - U.S. Patent and Trademark Office
Washington, D.C. 20231

Public burden reporting for this sample cover sheet is estimated to average about 30 minutes per document to be recorded, including time for reviewing the document and gathering the data needed, and completing and reviewing the sample cover sheet. Send comments regarding this burden estimate to the U.S. Patent and Trademark Office, Office of information systems, PK2-1000C, Washington, D.C. 20231, and to the Office of Management and Budget, Paperwork Reduction Project (0651-0011), Washington, D.C. 20503.

12/28/2001 LMUELLER 00000047 10020524
01 FC:581 40.00 OP

RECEIVED
MAR 1 8 2002
OFFICE OF PETITIONS

M&G 50040.01USU1

ASSIGNMENT

WHEREAS, we, Katharina Veronika Koelle, residing at 214 W. Ann Street, Ann Arbor, Michigan 48104 and William P. Worzel, residing at 214 W. Main Street, Milan, Michigan 48160, have made certain new and useful inventions and improvements for which we filed an application for Letters Patent of the United States executed herewith, which is entitled METHOD AND APPARATUS FOR PROTECTION OF ELECTRONIC MEDIA.

AND WHEREAS, Widevine Technologies, Inc., a corporation organized and existing under and by virtue of the laws of the State of Washington, and having an office and place of business at 900 Fourth Avenue, Suite 3400, Seattle, Washington 98164 (hereinafter "Assignee") is desirous of acquiring the entire right, title and interest in and to said inventions, improvements and application and in and to the Letters Patent to be obtained therefor;

NOW THEREFORE, to all whom it may concern, be it known that for and in consideration of the sum of One Dollar and other good and valuable considerations, the receipt and sufficiency whereof is hereby acknowledged, we have sold, assigned, and transferred, and by these presents do sell, assign and transfer unto said Assignee, its successors or assigns, the entire right, title and interest for all countries in and to all inventions and improvements disclosed in the aforesaid application, and in and to the application, all divisions, continuations, or renewals thereof, all Letters Patent which may be granted therefrom, and all reissues or extensions of such patents, and in and to any and all applications which have been or shall be filed in any foreign countries for Letters Patent on the inventions and improvements, including an assignment of all rights under the provisions of the International Convention, and all Letters Patent of foreign countries which may be granted therefrom; and we do hereby authorize and request the Commissioner of Patents and Trademarks to issue any and all United States Letters Patent for the aforesaid inventions and improvements to the Assignee as the assignee of the entire right, title and interest in and to the same, for the use of the Assignee, its successors and assigns.

AND, for the consideration aforesaid, we do hereby agree that we and our executors and legal representatives will make, execute and deliver any and all other instruments in writing including any and all further application papers, affidavits, assignments and other documents, and will communicate to said Assignee, its successors and representatives all facts known to us relating to said improvements and the history thereof and will testify in all legal proceedings and generally do all things which may be necessary or desirable more effectually to secure to and vest in said Assignee, its successors or assigns the

entire right, title and interest in and to the improvements, inventions, applications, Letters Patent, rights, titles, benefits, privileges and advantages hereby sold, assigned and conveyed, or intended so to be.

AND, furthermore we covenant and agree with said Assignee, its successors and assigns, that no assignment, grant, mortgage, license or other agreement affecting the rights and property herein conveyed has been made to others by us and that full right to convey the same as herein expressed is possessed by us.

IN TESTIMONY WHEREOF, I have hereunto set my hand this 08 day of December, 2001.

Katharina Veronika Koelle

STATE OF _____)
) ss.
COUNTY OF _____)

Subscribed and sworn to before me, a Notary Public, this _____ day of _____, 2001.

Notary Public
My Commission Expires _____

IN TESTIMONY WHEREOF, I have hereunto set my hand this _____ day of _____, 2001.

William P. Worzel

STATE OF _____)
) ss.
COUNTY OF _____)

Subscribed and sworn to before me, a Notary Public, this _____ day of _____, 2001.

Notary Public
My Commission Expires _____

FORM PTO-1595
(Rev. 6-93)
OMB No. 0651-0011 (exp. 4/94)
M&G- 50040./01USU1

RECORDATION FORM COVER SHEET
PATENTS ONLY

U.S. DEPARTMENT OF COMMERCE
Patent and Trademark Office

To the Commissioner of Patents and Trademarks: Please record the attached original documents or copy thereof.

1. Name of conveying party(ies):

   1. Katharina Veronika Koelle
   2. William P. Worzel

Additional name(s) of conveying party(ies) attached? ☐ Yes ☒ No

2. Name and address of receiving party(ies):

   Widevine Technologies, Inc.
   900 Fourth Avenue, Suite 3400
   Seattle, Washington 98164

Additional name(s) & address(es) attached? ☐ Yes ☒ No

3. Nature of conveyance:
   ☐ Assignment ☐ Merger
   ☐ Security Agreement ☐ Change of Name
   ☒ Other: Notice Under 35 USC 261 Regarding Assignment with attached Employment Agreement

Execution Date: 1. February 21, 2002; 2. unsigned

4. Application number(s) or patent number(s):

   If this document is being filed together with a new application, the execution date of the application is:

A. Patent Application No.(s)

10/020,524

B. Patent No.(s)

Additional numbers attached? ☐ Yes ☒ No

5. Name and address of party to whom correspondence concerning document should be mailed:

Name: John W. Branch
Address: Merchant & Gould P.C.
P.O. Box 2903
Minneapolis, MN 55402-0903

23552
PATENT TRADEMARK OFFICE

6. Total number of applications and patents involved: 1

7. Total fee (37 CFR 3.41): $40.00
   ☒ Enclosed
   ☐ Authorized to be charged to deposit account

8. Please charge any additional fees or credit any overpayments to our Deposit account number: 13-2725

DO NOT USE THIS SPACE

9. Statement and signature:

   To the best of my knowledge and belief, the foregoing information is true and correct and any attached copy is a true copy of the original document.

John W. Branch, Reg. No. 41,633
Name of Person Signing

Signature

February 21, 2002
Date

Total number of pages including cover sheet, attachments, and document: 12

Do not detach this portion

Mail documents to be recorded with required cover sheet information to:
Box Assignments
Director - U.S. Patent and Trademark Office
Washington, D.C. 20231

Public burden reporting for this sample cover sheet is estimated to average about 30 minutes per document to be recorded, including time for reviewing the document and gathering the data needed, and completing and reviewing the sample cover sheet. Send comments regarding this burden estimate to the U.S. Patent and Trademark Office, Office of information systems, PK2-1000C, Washington, D.C. 20231, and to the Office of Management and Budget, Paperwork Reduction Project (0651-0011), Washington, D.C. 20503.

SN 10/020,524 PATENT

IN THE UNITED STATES PATENT AND TRADEMARK OFFICE

Applicant:	Katharina Koelle, et al.	Examiner:	Not Yet Assigned
Serial No.:	10/020,524	Group Art Unit:	Not Yet Assigned
Filed:	December 14, 2001	Docket No.:	50040.01USU1
Title:	METHOD AND APPARATUS FOR PROTECTION OF ELECTRONIC MEDIA		

CERTIFICATE UNDER 37 CFR 1.8: The undersigned hereby certifies that this correspondence is being deposited in the United States Postal Service, as first class mail, with sufficient postage, in an envelope addressed to: USPTO, Assignment Division, 1213 Jefferson Davis Hwy, Arlington, Virginia 22202 on February 21, 2002.

By: _____
Name: John W. Branch

NOTICE UNDER 35 U.S.C. 261 REGARDING ASSIGNMENT

United States Patent and Trademark Office
Attention: Assignment Division
1213 Jefferson Davis Hwy
Arlington, Virginia 22202

Dear Sir:

You are hereby on notice that Widevine Technologies, Inc., a Washington U.S.A. corporation (hereafter "WIDEVINE"), claims all rights to the invention(s) described in the patent application entitled **METHOD AND APPARATUS FOR PROTECTION OF ELECTRONIC MEDIA** and assigned attorney docket number 50040.01USU1, serial number 10/020,524, filed December 14, 2001.

Pursuant to an employment agreement recorded herewith, William P. Worzel is under an obligation to assign all his rights, title, and interest in the invention(s) described in the above-identified application to WIDEVINE. William P. Worzel has no rights in the invention(s) to assign to anyone else. Furthermore, WIDEVINE does not waive the right to compel William P. Worzel to formally perform his contractual obligation and claims complete and unfettered

ownership of any patent or patents issuing from the invention(s) described in the above-identified patent application.

John W. Branch
Reg. No. 41,633

2/21/02
Date

EMPLOYMENT AGREEMENT

THIS EXECUTIVE EMPLOYMENT AGREEMENT (the "Agreement") is made and entered into as of this 30th day of March, 2000, by and between Internet Direct Media, Inc., a Washington corporation (the "Company"), and William Worzel (the "Executive").

R E C I T A L S

The Company desires to retain the services of the Executive as one of its Directors of Advanced Technology on the terms and subject to the conditions set forth in this Agreement, and the Executive desires to make his services available to the Company on the terms and subject to the conditions set forth in this Agreement.

A G R E E M E N T

1. Employment.

1.1 General. The Company hereby agrees to employ the Executive as a Director of Advanced Technology, which is not a position on the Board of Directors, on the terms and subject to the conditions contained in this Agreement, and the Executive hereby agrees to accept such employment on the terms and subject to the conditions contained in this Agreement.

1.2 **Duties of Executive**. During the Employment Period (as defined below), the Executive shall diligently perform all duties and responsibilities as may be assigned to him by the President or the CEO. The Executive shall devote his full business time and attention to the business and affairs of the Company as necessary to perform his duties and responsibilities hereunder, render such services to the best of his ability, and use his best efforts to promote the interests of the Company. Further, during the Employment Period, Executive will not, without Company's prior written consent, directly or indirectly engage in any employment, consulting, or other activity that would interfere or conflict with the performance of Executive's duties or obligations to Company or which would directly or indirectly compete with Company.

2. Commencement. Employment shall commence March 1, 2000 ("Commencement Date").

3. Term. The Employment Period of this Agreement shall be for a period of three (3) years (the "Employment Period") from the Commencement Date, unless sooner terminated pursuant to Paragraph 5.

4. Compensation.

4.1 Salary. During the Employment Period, the Executive shall receive an annual salary of Eleven Thousand Dollars ($11,000.00) per month ("Base Compensation") payable in installments consistent with the Company's normal payroll, subject to all withholding as is legally required or directed by Executive.

4.2 Quarterly Cash Bonus. Executive shall be eligible for a bonus, to be paid based upon achievement of goals and milestones, the terms and achievement of which shall be determined at the discretion of the President or the CEO.

4.3 Stock Options. In connection with the commencement of Executive's employment, the Company shall grant Executive an option to purchase 150,000 shares of Company's Common Stock at a cost of ten cents ($0.10) per share, 25,000 of which vest immediately upon start of employment and 125,000 of which vest over three (3) years based under the Company's 1999 Incentive Stock Option Plan and Nonstatutory Stock Option Plan dated July 1, 1999 (the "Plan"). The option shall be structured to qualify as an incentive stock option under section 422 of the Internal Revenue Code of 1986, as amended (the "Code").

4.4 Vacation. Executive shall be entitled to twenty one (21) days paid vacation plus government holidays during each year of employment. Such vacation shall be taken at a time mutually convenient to Company and Executive. Up to seven (7) days of unused vacation time may be accumulated and carried over from year to year during the Term of this Agreement. In the event this Agreement is terminated by either Company or Executive, except for "Cause," Executive shall be paid for any unused vacation time from the current year (on a pro rata basis) plus any unused approved carry-over vacation time from prior years.

4.5 Benefit Plans. During the Employment Period, the Executive shall be entitled to participate in all perquisites and benefit plans adopted for the general benefit of the Company's executives, such as stock option plans, 401(k) plans, pension plans, profit sharing plans, medical plans, group or other insurance plans and benefits, subject to the eligibility provisions and generally applicable terms of such plans in effect from time to time.

5. Termination of Employment and Severance Benefits.

5.1 Termination of Employment. Executive's employment may be terminated upon the occurrence of any of the following events, and subject to the following conditions:

a. Termination for Cause. The Company may terminate Executive for cause, subject to paragraph 5.3, which shall be effective immediately after the Company provides to the Executive written notice of such termination;

b. Termination Without Cause. The Company may terminate Executive's employment without cause, which determination may be made by the Company at any time at the Company's sole discretion, for any or no reason. Termination without cause shall be effective sixty (60) days after the Company provides to the Executive written notice of such termination. The Company may elect to provide pay in lieu of such notice;

c. Voluntary Termination. Executive may terminate his employment with the Company. The effective date shall be at least ninety (90) days after written notice to the Company from Executive; or

d. Death or Disability. Immediately upon Executive's death or disability (as defined in paragraph 5.4 below).

5.2 Voluntary Termination or Termination Without Cause. If Executive's employment terminates by Voluntary Termination with proper notice or by Termination Without Cause, then Executive shall receive payment upon termination for accrued but unused vacation days.

5.3 Termination for Cause. For purposes of this Agreement "Cause" means dishonesty, gross neglect of duties, conflict of interest, professional negligence, fraud or misrepresentation, refusal or repeated failure to carry out reasonable directives of the President or C.E.O., conviction of or pleading guilty or no contest to a felony or crime involving moral turpitude, any material

breach of this Agreement, or any other act or failure to act that, in the reasonable good faith business judgment of the Company, substantially impairs Company's business or reputation.

5.4 **Definition of Disability**. "Disability" shall mean that Executive has been unable to perform his duties hereunder as a result of his incapacity due to physical or mental illness, and such inability continues for at least 120 consecutive calendar days or 150 nonconsecutive days during any consecutive 18 month period after its commencement, as determined by a physician selected by Company.

6. **Duty of Loyalty**. As an employee of the Company, Executive will devote his best efforts to furthering the best interests of the Company. During his employment, Executive will not engage in any activity, investment, interest or association that (a) is hostile or adverse to or competitive with the Company, (b) occupies Executive's attention so as to interfere with the proper and efficient performance of his duties at the Company, or (c) interferes with the independent exercise of Executive's my judgment in the Company's best interests.

7. **Non-Disclosure.**

7.1 At all times during his employment and thereafter Executive will not disclose to anyone outside the Company or use for any purpose other than his work for the Company (a) any confidential or proprietary technical, financial, marketing, distribution or other business information or trade secrets of the Company, including without limitation, concepts, techniques, processes, methods, systems, designs, cost data, computer programs, formulas, mathematical algorithm, development or experimental work, work in process, customer and suppliers. Executive will consult with the President or Vice President of the Company with respect to any questions as to what comprises such confidential or proprietary information or trade secrets.

7.2 Executive recognizes that the Company has received and will receive confidential or proprietary information from third parties, imposing upon it a duty to maintain the confidentiality of such information and to use it only for certain limited purposes. During the term of Executive's employment and thereafter Executive owes the Company and such third parties a duty not to disclose such confidential or proprietary information to anyone except as necessary in carrying out Executive's work for the Company and consistent with the Company's agreement with such third party. Executive will not use such information for any person's or entity's benefit other than as specified in the Company's agreements. This Paragraph 7.2 shall not apply to any confidential or proprietary information owned by or received by Company from Executive or Evolution Enterprises, Inc.

7.3 During Executive's employment at the Company, Executive will not use improperly or disclose any confidential or proprietary information or trade secrets of Executive's former or current employers, principals, partners, co-venturers, clients,' customers, or suppliers of the vendors or customers of such persons or entities. Neither will Executive bring onto the premises of the Company any unpublished document or any property belonging to any such persons or entities or their vendors or customers unless such persons or entities have consented in writing. Executive will not violate any non-disclosure or proprietary rights agreements Executive's might have signed in connection with any such person or entity.

8. **Ownership of Proprietary Assets.**

8.1 Executive will make prompt and full disclosure to the Company, will hold in trust for the sole benefit of the Company, and will assign exclusively to the Company all Executive's right, title, and interest in and to any and all inventions, discoveries, designs, developments, improvements, copyrightable material, and trade secrets, including notes, outlines and the like (collectively, "Inventions") that Executive, solely or jointly, may develop or reduce to practice during the period of his employment. Executive hereby waives and quitclaims to the Company any and all claims that he now or hereafter may have for infringement of any patent resulting from any patent applications for any Inventions so assigned to the Company.

8.2 Executive shall have no duty to assign any Invention:

a. Which was developed entirely on Executive's own time; and

b. For which no equipment, supplies, facility or trade secret information of the Company was used in its development (provided, that Executive's private use of the Internet access/firewall provided by Company shall not be considered the use of Company equipment or facilities for purposes of this subparagraph 8.2.b.); and

c. Which does not relate (i) directly to the business of the Company or (ii) to the actual or demonstrably anticipated research or development of the Company; and

d. Which does not result from any work performed by Executive for the Company.

8.3 Executive shall have no duty to assign any Inventions which constitute enhancements, extensions or improvements to the fundamental genetic programming system which the Company licenses from Evolution Enterprises, Inc. All such Inventions shall be the sole property of Evolution Enterprises, Inc.

8.4 Executive shall have no duty to assign any Inventions which apply or implement the genetic programming system which the Company licenses from Evolution Enterprises, Inc.in any manner which is entirely unrelated to the Internet. All such Inventions shall be the sole property of Evolution Enterprises, Inc.

8.5 Any Inventions arising out of the application by the Company of the genetic programming system which the Company licenses from Evolution Enterprises, Inc. to the Internet may result in Inventions which do not have direct application to the field of the Internet. The proprietary rights in any such Invention shall be assigned by the Company and Executive to a joint venture owned equally by the Company and Evolution Enterprises, Inc. with the object of licensing such Inventions to earn royalties for the participants in the joint venture.

8.6 Executive expressly acknowledges that all Inventions (other than Inventions excluded in Section 8.2, 8.3, 8.4 and 8.5) are to be considered a "work for hire" within the meaning of the United States Copyright Act and the Company is to be the "author" within the meaning of the Act. All copyrights in such Inventions, as well as all copies of such Inventions in any medium, shall be owned exclusively by the Company on their creation, and Executive expressly disclaims any interest in them.

8.7 In the event (and to the extent) that any Invention (other than an Invention excluded in Section 8.2, 8.3, 8.4 or 8.5) or any part of it is found as a matter of law not to be a

"work for hire" within the meaning of the Act, Executive hereby assigns to the Company the sole and exclusive right, title, and interest in the copyrights to, and all copies of, such Invention, without further consideration, and agree to assist the Company to register, and from time to time to enforce, the copyrights. To that end, Executive agrees to execute and deliver all documents requested by the Company in connection therewith, and irrevocably designate and appoint the Company as Executive's agent and attorney-in-fact to act in Executive's behalf and stead to execute, register, and file any such applications, and to do other lawfully permitted acts to further the registration of copyrights with the same legal force and effect as if executed by Executive.

8.8 Executive will execute any proper oath or verify any proper document in connection with carrying out the terms of this Section 8. If, because of Executive's mental or physical incapacity or for any other reason whatsoever, the Company is unable to secure Executive's signature to apply for or to pursue any application for any United States or foreign patent or copyright covering Inventions assigned to it as stated above, Executive hereby irrevocably designates and appoints the Company and its duly authorized officers and agents as Executive's agent and attorney-in-fact, to act for him and in his behalf and stead to execute and file any such applications and to do all other lawfully permitted acts to further the prosecution and issuance of United States and foreign patents and copyrights thereon with the same legal force and effect as if executed by Executive. Executive will testify at the Company's request and expense in any interference, litigation or other legal proceeding that may arise during or after my employment.

9. **Return of Materials.** At the time Executive leaves the employ of the Company, he will return to it all papers, drawings, notes, memoranda, specifications, designs, devices, documents and any other material containing or disclosing any confidential or proprietary technical or business information belonging to Company or to third parties (other than Evolution Enterprises, Inc.). Executive will also return any keys, pass cards, identification cards or other property belonging to the Company.

10. **Non-Competition**. For a period of one (1) year after termination of Executive's employment, Executive will not accept employment or engage in activities directly competitive with the business or with the actual or demonstrably anticipated research or development of the Company as of Executive's termination date.

11. **Non-Interference with Other Employees.** While employed at the Company and for a period of one (1) year after termination of Executive's employment, Executive will not induce or attempt to influence directly any employee of the Company to terminate his or her employment with the Company.

12. **Non-Solicitation of Customers.** While employed at the Company and for a period of one (1) year after termination of Executive's employment, Executive will not directly solicit business from customers or demonstrably anticipated customers of the Company if such business is directly competitive with the actual or demonstrably anticipated research or development of the Company.

13. **Section Headings.** The section headings contained in this Agreement are for reference purposes only and shall not affect in any way the meaning or interpretation of this Agreement.

14. Notices. Any notice required or permitted to be given under this Agreement shall be in writing and shall be deemed to have been given when delivered by hand or three (3) days after sent by registered or certified United States mail, return receipt requested, postage prepaid, or the next business day following dispatch by a reputable overnight courier service, addressed as follows,

(i) If to the Executive:

William Worzel
214 West Main St.
Milan, MI 48160

(ii) If to the Company

John Beyer, CEO
Internet Direct Video, Inc.
14631 N.E. Third Ave., Suite 7
Bellevue, WA 98007

And to

Davis Wright Tremaine LLP
1501 Fourth Avenue
Seattle, WA 98101
Attn: A. Peter Parsons

or to such other addresses as either party hereto may from time to time give notice of to the other party hereto in the aforesaid manner.

15. Assignment. Executive agrees that his obligations under this Agreement are in the nature requiring his personal service, and that he will not assign, sell, transfer, or delegate any rights or obligations under this Agreement. Any such purported assignment, transfer, or delegation shall be null and void. The Company shall not assign its rights and obligations under this Agreement except to any or all of its qualifying subsidiary or affiliated companies, or the majority owner of Company or any of its affiliated or subsidiary companies.

16. No Third Party Beneficiary. Nothing expressed or implied in this Agreement is intended, or shall be construed, to confer upon or give any person other than the parties hereto and their respective heirs, executors, personal representative, legal representative, successors and assigns, any rights or remedies under or by reason of this Agreement.

17. Binding Effect. This Agreement shall be for the benefit of and binding upon the parties hereto and their respective heirs, personal representatives, legal representatives, successors and assigns.

18. Severability. The invalidity of any one or more of the words, phrases, sentences, clauses, sections or subsections contained in this Agreement shall not affect the enforceability of the remaining portions of this Agreement or any part thereof, all of which are inserted conditionally on their being valid in law, and, in the event that any one or more of the words, phrases, sentences, clauses, sections or subsections contained in this Agreement or any put thereof shall be declared invalid, this Agreement shall be construed as if such invalid word or words, phrase or phrases, sentence or sentences, clause or clauses, section or sections or subsection or subsections had not been inserted. If such invalidity is caused by length of time or size of area or both, the otherwise invalid provision will be considered to be reduced to a period or area which would cure such invalidity.

19. Governing Law. This Agreement, the rights and obligations of the parties hereto, and any claims or disputes relating thereto, shall be governed by and construed in accordance with the laws of the State of Washington, excluding the choice of law rules thereof. Subject to Section 20, the Company and the Executive each hereby irrevocably submit to the jurisdiction of the state or federal courts located in Washington in connection with any suit, action or other proceeding arising out of or relating to this Agreement and hereby agree not to assert, by way of motion, as a defense, or otherwise in any such suit, action or proceeding that the suit, action or proceeding is brought in an inconvenient forum, that the venue of the suit, action or proceeding is improper or that this Agreement or the subject matter hereof may not be enforced by such courts.

20. Resolution of Claims.

a. Arbitration. A claim by either party for breach or enforcement of a provision of this Agreement and any other claim or dispute related to or arising out of Executive's employment by Company is subject to binding arbitration, and the parties hereby waive their right to jury trial. The arbitration shall be conducted through the American Arbitration Association ("AAA"), and held before such arbitrator as the parties may agree or, if they are unable to do so, to be selected by obtaining nine proposed arbitrators from AAA and alternatively striking names (Executive shall strike first) until one name remains. The arbitration shall be conducted in Seattle, Washington according to the AAA Commercial Arbitration Rules then in effect. A claim may be initiated by either party by submitting a written claim to AAA, with a copy to the other party. The decision of the arbitrator shall be final and conclusive, and the parties waive the right to trial de novo or appeal, excepting only for the purpose of enforcing the arbitrator's decision, for which purpose the parties agree that the Superior Court for King County, Washington shall have jurisdiction. The substantially prevailing party will be entitled to recover reasonable attorneys' fees and costs of the arbitration and any action necessary for enforcement, the amount of the award to be determined by the arbitrator and court, respectively. This arbitration provision shall not apply to any claims for benefits under a benefits plan that contains an arbitration provision.

b. Temporary Restraining Order / Injunction. Irrespective of the foregoing, Company may, at its option, proceed directly to King County Superior Court to seek a temporary restraining order, preliminary injunction, and/or other injunctive relief for any violations by Executive of paragraphs 6, 7, 8, 9,10, 11 or 12. The substantially prevailing party shall be entitled to recover its reasonable costs and attorneys' fees.

21. Amendment; Modification; Waiver. No amendment, modification or waiver of the terms of this Agreement shall be valid unless made in writing and duly executed by the Company and the Executive. No delay or failure at any time on the part of the Company in exercising any right, power or privilege under this Agreement, or in enforcing any provision of this Agreement, shall impair any such right therein, or shall affect the right of the Company thereafter to enforce each and every provision of, power or privilege, or be construed as a waiver of any default or as any acquiescence this Agreement in accordance with its terms. The waiver by either party hereto of a breach or violation of any term or provision of this Agreement shall neither operate nor be construed as a waiver of any subsequent breach or violation.

22. Entire Agreement. This Agreement constitutes the entire agreement between the parties hereto with respect to the subject matter hereof and supersedes all prior agreements, understandings and arrangements, both oral and written, between the parties hereto with respect to such subject matter. This Agreement may not be modified in any way, unless by a written instrument signed by both the Company and the Executive.

IN WITNESS WHEREOF, the undersigned have executed this Agreement as of the date first above written.

INTERNET DIRECT VIDEO, INC.

By: _____
John Beyer, CEO

EXECUTIVE

_____
William Worzel

WiDEViNE
TECHNOLOGIES

John Branch
Merchant & Gould
1191 2nd Avenue
Suite 1500
Seattle, WA 98101

MERCHANT & GOULD
NOV 0 8 2001
RECEIVED

Dear Mr. Branch,

Jonathan Wright requested that I send the attached documents to you on his behalf.

Thank you,

Nicole Girard

Nicole Girard

1301 Fifth Avenue Suite 1300 Seattle, WA 98101 206.254.3000

MERCHANT & GOULD P.C.
A PROFESSIONAL CORPORATION
AN INTELLECTUAL PROPERTY LAW FIRM
SEATTLE, WASHINGTON

WELLS FARGO BANK, N.A.
SEATTLE, WASHINGTON

2059

11-24/1210(8)

PAY Forty and 00/100 DOLLARS

TO THE ORDER OF Commissioner for Patents

DATE	CHECK NO.	AMOUNT	
		DOLLARS	CENTS
2/21/02	2059	40	00

MERCHANT & GOULD P.C.

Charlotte L. Anderson

50040.01US01

⑈002059⑈ ⑆121000248⑆ 4296 916594⑈

THIS DOCUMENT HAS A SECURITY COLOR BACKGROUND ON FACE AND ORIGINAL DOCUMENT SECURITY SCREEN ON BACK WITH PADLOCK SECURITY ICON.

I, John W. Branch, declare that:

1. I am an attorney of the State of Washington given recognition pursuant to 37 CFR § 10.6 to prepare and prosecute patent applications before the United States Patent and Trademark Office.

2. I represent Widevine Technologies, Inc., of Seattle, Washington, in prosecuting a patent application, entitled METHOD AND APPARATUS FOR PROTECTION OF ELECTRONIC MEDIA, and assigned attorney docket number 50040.01USU1, Serial number 10/020,524, filed December 14, 2001.

3. I have personal knowledge of the matters set forth herein.

4. I am over the age of majority and am competent to be a witness in this matter.

5. On December 10, 2001, I caused to be emailed to William P. Worzel an electronic copy of the above-identified patent application and instructions. In the email, William P. Worzel was asked to review the patent application and provide a response regarding issues that he might have with the patent application, or indicate that it met with his approval. A copy of the email is attached hereto. See Exhibit 1.

6. No response was ever received from William P. Worzel to the December 10, 2001, email request.

7. On December 10, 2001, I caused to be mailed to William P. Worzel via certified mail a copy of the above-identified patent application along with an Assignment, Combined Declaration and Power of Attorney, and a cover letter. A copy of the Certified Mail Receipt is attached hereto. See Exhibit 2.

8. In the cover letter dated December 10, 2001, William P. Worzel was asked to review a copy of the above-identified patent application. If the patent application met with his approval, we asked him to execute the Assignment and Combined Declaration and Power of Attorney documents and return them to us for filing with the U.S. Patent and Trademark Office.

9. On December 14, 2001, I caused to be filed with the U.S. Patent and Trademark Office the above-identified patent application.

10. On December 22, 2001, William P. Worzel signed for the certified mail sent on December 10, 2001. A copy of the signed Return Receipt is attached hereto. See Exhibit 3.

11. No response was ever received from William P. Worzel to the certified mail sent on December 10, 2001.

12. On January 7, 2002, I caused to be emailed to William P. Worzel a request for the status of his review of the above-identified patent application.

13. On January 7, 2002, I received an email from William P. Worzel, a copy of which is attached hereto, stating that he had "neither the time, nor the inclination to look at these papers before the 16th as [he had] a deadline then." See Exhibit 4.

14. On January 23, 2002, I caused to be emailed to William P. Worzel a request for the status of his cooperation in reviewing the above-identified patent application and the execution

of the Assignment and Combined Declaration and Power of Attorney documents. This email included another electronic copy of the Assignment and Combined Declaration and Power of Attorney documents, for his convenience. A copy of the email is attached hereto. See Exhibit 5.

15. On January 23, 2002, I caused to be mailed to William P. Worzel via certified mail a copy of the patent application as filed together with an Assignment, Combined Declaration and Power of Attorney, and a cover letter. The cover letter included a request for William P. Worzel to review the enclosed formal documents, sign, and return them to our office. A copy of the Certified Mail Receipt is attached hereto. See Exhibit 6.

16. The certified mail of January 23, 2002 was returned unclaimed by William P. Worzel. A copy of the Certified Mail Receipt is attached hereto. See Exhibit 7.

17. On January 29, 2002, I received an email from William P. Worzel, a copy of which is attached hereto, stating that he had received the contents of the email sent on January 23, 2002. William P. Worzel also stated that he would not sign the Assignment document. William P. Worzel further stated that he would do nothing that required him to spend even a minute more of his time regarding this matter without recompense of at least $200 per hour. A copy of the email is attached hereto. See Exhibit 8.

18. William P. Worzel has repeatedly refused to cooperate in the preparation and filing of the above-identified patent application as required to do so under the terms of his previous employment with the assignee.

19. William P. Worzel's last known address is:

    214 W. Main Street,
    Milan, Michigan 48160

I hereby declare under penalty of perjury under the laws of the United States of America that all statements made herein of my own knowledge are true and that all statements made on information and belief are believed to be true; and further that these statements were made with the knowledge that willful false statements and the like so made are punishable by fine or imprisonment, or both, under Section 1001 of Title 18 of the United States Code and that such willful false statements may jeopardize the validity of the patent application or any patent issued thereon.

John W. Branch
Reg. No. 41,633

2/26/02
Date

SPE RESPONSE FOR CERTIFICATE OF CORRECTION

Paper No.: _____

DATE : Sept. 5, 2009

TO SPE OF : ART UNIT 3663

SUBJECT : Request for Certificate of Correction for Appl. No.: 10/020527 Patent No.: 7046434

Please respond to this request for a certificate of correction within 7 days.

FOR IFW FILES:

Please review the requested changes/corrections as shown in the **COCIN** document(s) in the IFW application image. No new matter should be introduced, nor should the scope or meaning of the claims be changed.

Please complete the response (see below) and forward the completed response to scanning using document code **COCX**.

FOR PAPER FILES:

Please review the requested changes/corrections as shown in the attached certificate of correction. Please complete this form (see below) and forward it with the file to:

Certificates of Correction Branch (CofC)
South Tower - 9A22
Palm Location 7580

Magdalene Talley
Certificates of Correction Branch
703-308-9390 ext. 116

Thank You For Your Assistance

The request for issuing the above-identified correction(s) is hereby:
Note your decision on the appropriate box.

- ☑ **Approved** — All changes apply.
- ☐ **Approved in Part** — Specify below which changes do not apply.
- ☐ **Denied** — State the reasons for denial below.

Comments: _____

JACK KEITH
SUPERVISORY PATENT EXAMINER

PAGE 1/1 * RCVD AT 4/12/2010 1:36:15 PM [Eastern Daylight Time] * SVR:USPTO-EFXRF-6/15 * DNIS:2709942 * CSID: * DURATION (mm-ss):00-28

UNITED STATES PATENT AND TRADEMARK OFFICE

Commissioner for Patents
United States Patent and Trademark Office
Washington, D.C. 20231
www.uspto.gov

Paper No. 6

Carlos A. Fisher
ALLERGAN, INC.
T2-7H
2525 Dupont Drive
Irvine CA 92612

COPY MAILED

AUG 1 4 2002

OFFICE OF PETITIONS

In re Application of	:	
Wheeler et al.	:	
Application No. 10/020,541	:	DECISION ON PETITION
Filed: April 26, 2002	:	
Attorney Docket No.	:	
17400(BAR)	:	

This is a decision on the petition filed April 26, 2002, under 37 CFR 1.182, to permit entry of page 14 of the specification.

The petition is **granted**.

The application was filed on October 30, 2001. However, on March 26, 2002, the Office of Initial Patent Examination mailed a Notice to Comply With Requirements for Patent Applications Containing Nucleotide Sequence and/or Amino Acid Sequence Disclosures (hereinafter "Notice"), which also notified applicants that page 14 of the specification appeared to have been omitted from the application.

In response, on April 26, 2002, applicant submitted the instant petition and a Supplemental Declaration which makes reference to page 14 of the specification. The petition requests entry of page 14 of the specification as part of the original disclosure, and the application be accorded as the filing date, the date that page 14 of the specification was submitted.

The mailing of the Notice permits the applicant to either: (1) promptly establish prior receipt in the PTO of the page(s) at issue (generally by way of a date-stamped postcard receipt (MPEP 503)), or (2) promptly submit the omitted page(s) in a nonprovisional application and accept the date of such submission as the application filing date.

Petitioner has selected option two. Accordingly, the filing date of the application is the date that page 14 of the specification was submitted, April 26, 2002.

The application is being returned to the Office of Initial Patent Examination for further processing with a filing date of April 26, 2002, using page 14 of the specification filed on that date.

Telephone inquiries concerning this matter should be directed to Petitions Attorney Derek L. Woods at (703) 305-0014.

Christina Tartera Donnell for

Beverly M. Flanagan, Esq.
Supervisory Petitions Examiner
Office of Petitions
Office of the Deputy Commissioner
for Patent Examination Policy

Conferee: Christina Donnell, Esq.

UNITED STATES PATENT AND TRADEMARK OFFICE

Commissioner for Patents
United States Patent and Trademark Office
P.O. Box 1450
Alexandria, VA 22313-1450
www.uspto.gov

Carlos A. Fisher
ALLERGAN, INC.
T2-7H
2525 Dupont Drive
Irvine CA 92612

COPY MAILED

OCT 27 2008

OFFICE OF PETITIONS

In re Application of	:	
Wheeler et al.	:	
Application No. 10/020541	:	DECISION
Filing or 371(c) Date: 04/26/2002	:	ON PETITION
Attorney Docket Number:	:	
17400(BAR)	:	

This is a decision on the "Petition Pursuant to 37 CFR 1.182 for Reinstatement of Priority Date," filed January 8, 2008. The petition is properly treated under 37 CFR 1.181[1].

This Petition is hereby **dismissed**.

Application papers were filed in the above-identified application on October 30, 2001. However, on March 26, 2002, the Office of Initial Patent Examination mailed a Notice to Comply with Requirements for Patent Applications Containing Nucleotide Sequence and/or Amino Acid Sequence Disclosures (hereinafter "Notice'), which also notified Applicant's that page 14 of the specification appeared to have been omitted from the application.

The Notice provided Applicant with the following three options:

I. Should Applicant contend that the omitted item was in fact deposited in this Office with the application papers, Applicant was required to file a petition, along with evidence of the deposit.

[1] A petition under 37 CFR § 1.182 is the appropriate venue where the issue is not otherwise specifically provided for in the rules of practice. Here, the petition is filed to reinstate the filing date of the application that was changed in the Decision on Petition mailed August 14, 2002. As such, the appropriate venue is 37 CFR 1.181, Petitions to the Director, which provides the forum for petitioning from any action in the ex-parte prosecution of an application which is not subject to appeal to the Board or to the court, and to invoke the supervisory authority of the Director. Since there is a specific mechanism in place to remedy the requested relief, then it is inappropriate for the USPTO to contemplate circumventing that mechanism by creating another remedy, in this instance, under 37 CFR 1.182.

II. Should Applicant desire to supply the omitted item(s) and accept the date that such omitted item was filed in this Office as the filing date of the application, a copy of the Notice; the omitted item; a supplemental oath/declaration and a petition were required.

III. Applicant could also not file a petition and accept the application as deposited, and maintain the filing date accorded the application without the omitted page.

The April 26, 2002 Petition

In response to the Notice, Applicant submitted a petition on April 26, 2002, a copy of the Notice, and a Supplemental Declaration, which made reference to page 14 of the specification. The petition acknowledged that page 14 of the specification was inadvertently omitted from the originally-filed application papers. Applicant requested entry of page 14 of the specification, and requested that page 14 of the specification be given the filing date of the petition.

The August 14, 2002 Decision on petition

A Decision on the petition was mailed August 14, 2002. The Decision noted that the mailing of the Notice permitted Applicant to either (1) promptly establish receipt in the PTO of the papers at issue, or (2) promptly submit the omitted page in a nonprovisional application and accept the date of such submission as the application filing date. The Decision stated that "Petitioner has selected option two. Accordingly, the filing date of the application is the date that page 14 of the specification was submitted, April 26, 2002." Decision at p.1.

The present petition

Applicant files the present petition to reinstate the priority date of the present specification, with the exception of page 14, or in the alternative, Applicant requests that page 14 of the specification be removed from the present specification and the remaining pages of the specification be given the benefit of priority date, November 1, 2000.

In support of this request, Applicant asserts that in the petition filed April 26, 2002, Applicant's requested that only page 14 be given the filing date of the Petition (April 26, 2002). Applicant's assert that while the Decision stated that the petition granted, the petition was not granted insofar as Applicant's never agreed to abandon the original filing date or the priority claim.

Alternatively, Applicant requests that it be allowed to delete page 14 from the specification and restore the priority (filing) date of the application to October 30, 2008.

Applicable Law, Rules and/or MPEP

35 U.S.C. § 111, Application, states:

> The filing date of an application shall be the date on which the specification and any required drawing are received in the Patent and Trademark Office.

35 U.S.C. § 112 Specification, states:

> The specification shall contain a written description of the invention, and of the manner and process of making and using it, in such full, clear, concise, and exact terms as to enable any person skilled in the art to which it pertains, or with which it is most nearly connected, to make and use the same, and shall set forth the best mode contemplated by the inventor of carrying out his invention.
> The specification shall conclude with one or more claims particularly pointing out and distinctly claiming the subject matter which the applicant regards as his invention.

37 CFR 1.53, Application number, filing date, and completion of application, states:

> (b) Application filing requirements - Nonprovisional application . The filing date of an application for patent filed under this section, except for a provisional application under paragraph (c) of this section or a continued prosecution application under paragraph (d) of this section, is the date on which a specification as prescribed by 35 U.S.C. 112 containing a description pursuant to § 1.71 and at least one claim pursuant to § 1.75, and any drawing required by § 1.81(a) are filed in the Patent and Trademark Office. No new matter may be introduced into an application after its filing date.

37 CFR 1.181, Petition to the Director, states:

> (a) Petition may be taken to the Director:
> (1) <u>From any action or requirement of any examiner in the ex parte prosecution of an application</u>, or in ex parte or inter partes prosecution of a reexamination proceeding which is not subject to appeal to the Board of Patent Appeals and Interferences or to the court;
> (2) In cases in which a statute or the rules specify that the matter is to be determined directly by or reviewed by the Director; and
> (3) <u>To invoke the supervisory authority of the Director in appropriate circumstances</u>. For petitions involving action of the Board of Patent Appeals and Interferences, see § 41.3 of this title. (Emphasis supplied).
>
> (f) The mere filing of a petition will not stay any period for reply that may be running against the application, nor act as a stay of other proceedings. <u>Any petition under this part not filed within two months of the mailing date of the action or notice from which relief is requested may be dismissed as untimely</u>, except as otherwise provided. This two-month period is not extendable.

<u>Analysis</u>

In the petition filed April 26, 2002, Applicant requested entry of page 14 of the specification, and requested that page 14 of the specification be given the filing date of the petition. Under the patent statute and rules of practice, page 14 did not meet the requirements for receiving a filing

date. See, 35 U.S.C. 112. Moreover, the Notice provided Applicant with the options of either (1) promptly establish receipt in the PTO of the papers at issue; (2) promptly submit the omitted page in a nonprovisional application and accept the date of such submission as the application filing date (which also required Applicant to submit a copy of the Notice and a supplemental oath/declaration), or (3) do nothing and accept the application as filed without page 14 of the specification.

Applicant responded by submitting page 14 of the specification, along with a copy of the Notice and a Supplemental oath/declaration referring to page 14 of the specification.

The decision on petition mailed August 14, 2002, clearly stated that "Petitioner has selected option two. Accordingly, the filing date of the application is the date that page 14 of the specification was submitted, April 26, 2002." Decision at p.1.

Finally, on myriad occasions throughout prosecution, Applicant acknowledged that the filing date of the application is April 26, 2002.

Conclusion

The decision on petition establishing the filing date was mailed August 14, 2002, and no objection having been received within two (2) months of the mail date of that decision, the present petition requesting review of that decision is dismissed as untimely.

Telephone inquiries concerning this Decision should be directed to Attorney Derek Woods at (571) 272-3232.

Anthony Knight
Supervisor
Office of Petitions

UNITED STATES PATENT AND TRADEMARK OFFICE

UNITED STATES DEPARTMENT OF COMMERCE
United States Patent and Trademark Office
Address: COMMISSIONER FOR PATENTS
P.O. Box 1450
Alexandria, Virginia 22313-1450
www.uspto.gov

APPLICATION NO.	FILING DATE	FIRST NAMED INVENTOR	ATTORNEY DOCKET NO.	CONFIRMATION NO.
10/020,546	10/29/2001	Kenneth S. McElvain	02986.P017X	8567

7590 03/28/2008

James C. Scheller, Jr.
BLAKELY, SOKOLOFF, TAYLOR & ZAFMAN LLP
Seventh Floor
12400 Wilshire Boulevard
Los Angeles, CA 90025-1026

EXAMINER
DIMYAN, MAGID Y

ART UNIT	PAPER NUMBER
2825	

MAIL DATE	DELIVERY MODE
03/28/2008	PAPER

Please find below and/or attached an Office communication concerning this application or proceeding.

The time period for reply, if any, is set in the attached communication.

UNITED STATES PATENT AND TRADEMARK OFFICE

Commissioner for Patents
United States Patent and Trademark Office
P.O. Box 1450
Alexandria, VA 22313-1450
www.uspto.gov

MAILED
FROM DIRECTORS OFFICE

MAR 27 2008

TECHNOLOGY CENTER 3600

MAXVALUEIP CONSULTING LLC
11204 ALBERMYRTLE ROAD
POTOMAC MD 20854

In re application of
Stanley Philip Cason
Application No. 12/020,546
Filed: January 27, 2008
For: METHOD AND SYSTEM FOR SHOPPING USING WIRELESS COMMUNICATION

DECISION ON PETITION TO MAKE SPECIAL FOR NEW APPLICATION UNDER 37 CFR 1.102

This is a decision on the petition filed on January 27, 2008 to make the above-identified application special for accelerated examination procedure under 37 C.F.R. § 1.102(d).

The petition to make the application special is **DISMISSED**.

REGULATION AND PRACTICE

A grantable petition to make special under 37 C.F.R. § 1.102(d) and pursuant to the "Change to Practice for Petitions in Patent Applications to Make Special and for Accelerated Examination" published in the Federal Register on June 26, 2006 (71 Fed. Reg. 36323), must satisfy the following conditions:

I. Conditions Regarding the Application:

1. the application must be a non-reissue utility or design application filed under 37 CFR 1.111(a);
2. the application, the petition and the required fees must be filed electronically using the USPTO's electronic filing system (EFS), or EFS-web; if not filed electronically, a statement asserting that EFS and EFS-web were not available during the normal business hours.
3. at the time of filing, the application must be complete under 37 CFR 1.51 and in condition for examination;
4. the application must contain three or fewer independent claims and twenty or fewer total claims and the claims must be directed to a single invention.

II. Conditions Regarding the Petition:

The petition must:

1. be filed with the application;

2. include a statement that applicant agrees not to separately argue the patentability of any independent claim during any appeal in the application;

3. include a statement that applicant agrees to make an election without traverse in a telephone interview.

4. include a statement that applicant agrees to conduct such an interview when requested by the examiner.

5. include a statement, made based on a good faith belief, that a preexamination search in compliance with the following requirements, was conducted, including an identification of the field of search by United States class and subclass, where applicable, and for database searches, the search logic or chemical structure or sequence used as a query, the name of the file(s) searched and the database service, and the date of the search.

The preexamination search must:

5.1 involve U.S. patents and patent application publications, foreign patent documents, and non-patent literature, unless the applicant can justify with reasonable certainty that no references more pertinent than those already identified are likely to be found in the eliminated sources and includes such a justification with this statement;

5.2. be directed to the claimed invention and encompass all of the features of the claims, giving the claims the broadest reasonable interpretation;

5.3. encompass the disclosed features that may be claimed.

6. must provide in support of the petition an accelerated examination support document.

An accelerated examination support document must include:

6.1. an information disclosure statement (IDS) in compliance with 37 CFR 1.98 citing each reference deemed most closely related to the subject matter of each of the claims;

6.2. an identification of all the limitations in the claims that are disclosed by the reference specifying where the limitation is disclosed in the cited reference;

6.3. a detailed explanation of how each of the claims is patentable over the references cited with particularity required by 37 CFR 1.111(b) and (c);

6.4. a concise statement of the utility of the invention as defined in each of the independent claims (unless the application is a design application);

6.5. a showing of where each limitation of the claims finds support under 35 USC 112, first paragraph, in the written description of the specification. If applicable, the showing must also identify: (1) each means- (or step) plus-function claim element that invokes consideration under 35 USC 112, sixth paragraph; and (2) the structure, material, or acts in the specification that corresponds to each means- (or step) plus-function claim element that invokes consideration under 35 USC 112, sixth paragraph; if the application claims the benefit of one or more applications under title 35, United States Code, the showing must also include where

each limitation of the claims finds support under 35 USC 112, first paragraph, in each such application in which such supports exists;

6.6. an identification of any cited references that may be disqualified under 35 USC 103(c).

REVIEW OF FACTS

The petition in this case fails to comply with conditions II.5.2 and II.6.3.

As per Condition II.5.2, the preexamination search must be directed to the claimed invention and encompass all of the features of the claims, giving the claims the broadest reasonable interpretation. Applicant's searches do not incorporate synonyms for the searched terms; therefore, the search queries are deemed to be overly narrow in relation to the scope of the claimed invention. For example, more synonyms should be used to search the wireless communication concept. Such synonyms might include rfid or (radio ADJ frequency) or wireless$2 or transponder$1 or ((passive$2 or active$2 or semi-passive$2 or semi-passive$2) NEAR3 (tag$1 or device$1)). Analogous concepts, including specific wireless network protocols and device names should be considered as well. More synonyms for "shop$" should also be utilized. Such synonyms might include shop$4 or purchas$3 or pay$3 or paid or mall or malls or buy$3 or patroniz$5 or patronis$5 or bought or ((acquir$3 or obtain$3 or own$3 or ownership) NEAR4 transact$4). More synonyms should be used for "price$," such as price$1 or pricing or cost$1 or value$1 or dollar$1 or amount$1. More synonyms should be employed to search "cart$5," such as cart$1 or basket$1 or ((shopping or grocery) NEAR3 (bag or bags)) or trolley$1. "Checkout?" and "check?(w)out?" might also be searched as (check$3 ADJ out$1) or POS or point-of-sale or (point$1 ADJ sale) or cashier$1 or scan$4. Applicant has generally searched the first three limitations recited in claim 1; however, the specific details of the remaining claim limitations have not been searched. For example, the details of repeatedly scanning a bar code or universal symbol, adding the object to the cart, removing another object from the object, calculating a total value of items in the cart, and establishing an alternative shopping list are not comprehensively searched. Also not searched are the checking of available inventory, available sales and coupons, and comparing selected objects by the shopper. The details of receiving a discount based on a contract of pre-approved items and pre-approved credit as well as receiving a receipt are also not reflected in any of the search queries. The Applicant emphasizes the details of the discount based on a contract of pre-approved items and pre-approved credit as contributing to the patentability of the claimed invention; therefore, it is important that these limitations be thoroughly searched in order to more confidently make a patentability determination.

A recommended search might be executed in all databases of East with the following search queries:

L1: rfid or (radio ADJ frequency) or wireless$2 or transponder$1 or ((passive$2 or active$2 or semi-passive$2 or semi-passive$2) NEAR3 (tag$1 or device$1)) or cell or cellular or mobile or PDA or (personal ADJ digital ADJ assistant$1)

L2: L1 SAME (shop$4 or purchas$3 or pay$3 or paid or mall or malls or buy$3 or patroniz$5 or patronis$5 or bought or ((acquir$3 or obtain$3 or own$3 or ownership) NEAR4 transact$4))

L3: L2 AND ((terms or contract$3 or agreement$1 or promis$3 or guarantee$1) SAME (price$1 or pricing or cost$1 or discount$3 or promotion$2 or coupon$1) SAME (preapprov$3 or pre-approv$3 or credit$1 or ((prior or pre or previous$2) ADJ approv$3)))

Please keep in mind that these are non-limiting search suggestions and they are only meant to serve as a possible starting point for Applicant's preexamination search. Additional guidance regarding the proper manner of performing and documenting a preexamination search may be found on the following web site: http://www.uspto.gov/web/patents/accelerated/ Applicant is expected to perform more supplemental searches than the sample search queries listed above.

Condition II.6.3 requires a detailed explanation of how each of the claims is patentable over the references cited with particularity required by 37 CFR 1.111(b) and (c). In Applicant's "Summary for Explanation of Patentability" section (found on page 26 of the Accelerated Examination Support Document), Applicant states, "Some or all of the features below are not taught by the references, alone or in combination. Thus, the claim is patentably distinguishable over each of these references, alone or in-combination. Therefore, Claim 1 is allowable with respect to 35 U.S.C. § 102 and 35 U.S.C. § 103(a)." Below these statements, Applicant lists three claim limitations. The phrase "some or all" is ambiguous as it does not specifically pinpoint which limitation or combination of limitations is asserted as patentably distinguishing the claimed invention over the prior art. Furthermore, it is unclear if Applicant is asserting that a certain claimed limitation(s) is not taught by any of the prior art references or if all claimed limitations are disclosed in various prior art references, yet a combination thereof would be unobvious. These issues should be more explicitly addressed by Applicant.

The petition fails to meet the required conditions to be accorded special status under the accelerated examination procedure.

DECISION

For the above stated reasons, the petition is **DISMISSED**. The application will therefore be taken up by the examiner for action in its regular turn.

Petitioner is given a single opportunity to perfect the petition. Any request for reconsideration of this decision must be submitted within one (1) month or thirty (30) days, whichever is longer, from the date of this decision. No extensions of time will be granted under 37 CFR 1.136(a) if the request is to be considered timely. Any request for reconsideration must address the deficiencies indicated above.

Petitioner is reminded that, upon granting of the special status of the application on request for reconsideration, the application will be processed expeditiously. However, due to the dismissal of the instant petition, examination may not be completed within twelve months of the filing date of the application.

Any inquiry regarding this decision should be directed to Robert Weinhardt, Business Practice Specialist, at (571) 272-6633, or Susanna Diaz at (571) 272-6733.

Robert A. Weinhardt,
Business Practice Specialist
Technology Center 3600

RW/SMD/3/22/08

UNITED STATES PATENT AND TRADEMARK OFFICE

Commissioner for Patents
United States Patent and Trademark Office
P.O. Box 1450
Alexandria, VA 22313-1450
www.uspto.gov

Paper No. 11

COPY MAILED

JUN 0 3 2004

OFFICE OF PETITIONS

LAW OFFICES OF JAMES D. IVEY
3025 TOTTERDELL STREET
OAKLAND, CA 94611-1742

In re Application of	:	
Roland E. Williams	:	
Application No. 10/020,572	:	ON PETITION
Filed: December 12, 2001	:	
Attorney Docket No. P-2183/ZI0105	:	

This is a decision on the petition under 37 CFR 1.137(b), filed May 24, 2004, to revive the above-identified application.

The petition is **GRANTED**.

This application became abandoned for failure to timely reply to the Office action mailed September 26, 2003. Accordingly, this application became abandoned on December 27, 2003. A Notice of Abandonment was mailed on May 5, 2004.

Please note, the terminal disclaimer, submitted May 24, 2004. Is not necessary. As such, the $110.00 fee will be refunded by treasury check.

The file is being forwarded to Technology Center 2600, for review of the response, filed May 24, 2004.

Telephone inquiries concerning this matter may be directed to the undersigned at (703) 306-9200.

Edward J. Tannouse
Petitions Attorney
Office of Petitions
United States Patent and Trademark Office

UNITED STATES PATENT AND TRADEMARK OFFICE

Commissioner for Patents
United States Patent and Trademark Office
P.O. Box 1450
Alexandria, VA 22313-1450
www.uspto.gov

HOFFMANN & BARON, LLP
6900 JERICHO TURNPIKE
SYOSSET, NY 11791

MAILED

MAR 30 2009

OFFICE OF PETITIONS

In re Application of :
Jacob **STOLTZE, et al.** :
Application No. 10/020,592 :
Filed: December 12, 2001 :
Attorney Docket No. **760-46 CIP/PCT/US/CON 2** :

DECISION ON PETITION TO WITHDRAW FROM RECORD

This is a decision on the Request to Withdraw as attorney or agent of record under 37 C.F.R. § 1.36(b), filed March 17, 2009.

The request is **DISMISSED** as moot.

A review of the file record indicates that a request to disregard the aforementioned request to withdraw power of attorney was received on March 25, 2009. The request was signed by Anna-Lisa Gallo, attorney associated with customer number 23869. Accordingly, the request to withdraw under 37 C.F.R. § 1.36(b) is moot.

The request is not signed by an attorney of record. Nevertheless, in accordance with 37 CFR 1.34, the signature of Ms. Anna-Lisa Gallo appearing on the correspondence shall constitute a representation to the United States Patent and Trademark Office that she is authorized to represent the particular party on whose behalf she acts.

All future communications from the Office will continue to be directed to the above-listed address until otherwise notified by applicant.

Telephone inquires concerning this decision should be directed to the undersigned at 571-272- 7253.

/Monica A. Graves/
Petitions Examiner, Office of Petitions

UNITED STATES PATENT AND TRADEMARK OFFICE

Commissioner for Patents
United States Patent and Trademark Office
P.O. Box 1450
Alexandria, VA 22313-1450
www.uspto.gov

GEN PROBE INCORPORATED
10210 GENETIC CENTER DRIVE
SAN DIEGO, CA 92121

COPY MAILED

SEP 07 2007

OFFICE OF PETITIONS

In re Application of	:	
Michael M. Becker	:	
Application No. 10/020,596	:	DECISION ON PETITION
Filed: December 7, 2001	:	
Attorney Docket No. GP123-02, UT	:	

This is a decision on the petition under the unintentional provisions of 37 CFR 1.137(b), filed April 24, 2007, to revive the above-identified application.

The petition is **GRANTED**.

The application became abandoned for failure to reply in a timely manner to the non-final Office action mailed, April 26, 2006, which set a shortened statutory period for reply of three (3) months. No extensions of time under the provisions of 37 CFR 1.136(a) were obtained. Accordingly, the application became abandoned on July 27, 2006.

The petition satisfies the requirements of 37 CFR 1.137(b) in that petitioner has supplied (1) the reply in the form of an amendment, (2) the petition fee of $1500; and (3) a proper statement of unintentional delay.

Telephone inquiries concerning this decision should be directed to undersigned at (571) 272-1642.

This application is being referred to Technology Center AU 1634 for appropriate action by the Examiner in the normal course of business on the reply received April 24, 2007.

April M. Wise
Petitions Examiner
Office of Petitions

UNITED STATES PATENT AND TRADEMARK OFFICE

COMMISSIONER FOR PATENTS
UNITED STATES PATENT AND TRADEMARK OFFICE
P.O. BOX 1450
ALEXANDRIA, VA 22313-1450
WWW.USPTO.GOV

Paper No. 12

Qualcomm Incorporated
Patents Department
5775 Morehouse Drive
San Diego CA 92121-1714

COPY MAILED

MAR 1 1 2004

OFFICE OF PETITIONS

In re Application of:	:	
Paul E. Peterzell et al.	:	
Application No. 10/020,607	:	DECISION ON PETITION
Filed: December 10, 2001	:	
Attorney Docket No. 010073U2	:	
Title: LOCAL OSCILLATOR LEAKAGE	:	
CONTROL IN DIRECT CONVERSION	:	
PROCESSES	:	

This is a decision on the petition filed January 9, 2004, pursuant to 37 C.F.R. §1.137(b) to revive the above-identified application, which is properly treated as a petition under 37 C.F.R. 1.181(a) to withdraw the holding of abandonment[1].

The above-identified application became abandoned for failure to reply within the meaning of 37 CFR §1.113 in a timely manner to the final Office action mailed March 31, 2003, which set a shortened statutory period for reply of three (3) months. No response was received, and no extensions of time under the provisions of 37 CFR §1.136(a) were obtained. Accordingly, the above-identified application became abandoned on July 2, 2003. A Notice of Abandonment was mailed on December 16, 2003.

With the instant petition, petitioner has submitted an RCE, a response to the final rejection, a three-month extension of time, and a preliminary amendment. All bear a certificate of mailing dated September 30, 2003.

37 C.F.R. § 1.8 sets forth, in part:

> § 1.8 Certificate of mailing or transmission.
> (a) Except in the cases enumerated in paragraph (a)(2) of this section, correspondence required to be filed in the Patent and Trademark Office within a set period of time

1 The petition fee has been refunded to petitioner's Deposit Account.

will be considered as being timely filed if the procedure described in this section is followed. The actual date of receipt will be used for all other purposes.

(1) Correspondence will be considered as being timely filed if:

(i) The correspondence is mailed or transmitted prior to expiration of the set period of time by being:

(A) Addressed as set out in § 1.1(a) and deposited with the U.S. Postal Service with sufficient postage as first class mail; or

(B) Transmitted by facsimile to the Patent and Trademark Office in accordance with § 1.6(d); and

(ii) The correspondence includes a certificate for each piece of correspondence stating the date of deposit or transmission. The person signing the certificate should have reasonable basis to expect that the correspondence would be mailed or transmitted on or before the date indicated.

Considering the facts and circumstances of the delay at issue, as set forth on petition, it is concluded that petitioner has met his burden of establishing that the mailing was not received.

Accordingly, the petition under 37 C.F.R. §1.181(a) is **GRANTED**. The holding of abandonment is **WITHDRAWN**.

The RCE filing fee and the three-month extension of time have been charged to Petitioner's Deposit Account, as authorized in the petition.

The application file is being forwarded to Technology Center 2800 for further processing of the RCE and the amendment submitted concurrently with this petition.

Telephone inquiries concerning *this decision* should be directed to the undersigned at (703) 305-0011.

Paul Shanoski
Attorney
Office of Petitions
United States Patent and Trademark Office

UNITED STATES PATENT AND TRADEMARK OFFICE

COMMISSIONER FOR PATENTS
UNITED STATES PATENT AND TRADEMARK OFFICE
P.O. BOX 1450
ALEXANDRIA, VA 22313-1450
www.uspto.gov

JANE E. GENNARO
ASSISTANT GENERAL COUNSEL IP
NATIONAL STARCH AND CHEMICAL COMPANY
10 FINDERNE AVENUE
BRIDGEWATER, NJ 08807-0500

COPY MAILED

MAR 1 6 2004

OFFICE OF PETITIONS

In re Application of	:	
Bodan Ma et al	:	
Application No. 10/020,638	:	DECISION GRANTING PETITION
Filed: December 14, 2001	:	UNDER 37 CFR 313(c)(2)
Attorney Docket No. 1979.EEM	:	

This is a decision on the petition, filed February 20, 2004, under 37 CFR 1.313(c)(2) to withdraw the above-identified application from issue after payment of the issue fee.

The petition is **GRANTED**.

The above-identified application is withdrawn from issue for consideration of a submission under 37 CFR 1.114 (request for continued examination). See 37 CFR 1.313(c)(2).

Petitioner is advised that the issue fee paid on January 29, 2004 in the above-identified application cannot be refunded. If, however, the above-identified application is again allowed, petitioner may request that it be applied towards the issue fee required by the new Notice of Allowance.[1]

Telephone inquiries should be directed to the undersigned at (703) 305-8680.

This matter is being referred to Technology Center AU 2827 for processing of the request for continued examination under 37 CFR 1.114 and for consideration of the concurrently filed Information Disclosure Statement.

Frances Hicks
Petitions Examiner
Office of Petitions
Office of the Deputy Commissioner
for Patent Examination Policy

---

[1] The request to apply the issue fee to the new Notice may be satisfied by completing and returning the new Issue Fee Transmittal Form PTOL-85(b), which includes the following language thereon: "Commissioner for Patents is requested to apply the Issue Fee and Publication Fee (if any) or re-apply any previously paid issue fee to the application identified above." Petitioner is advised that, whether a fee is indicated as being due or not, the Issue Fee Transmittal Form **must** be completed and timely submitted to avoid abandonment. Note the language in bold text on the first page of the Notice of Allowance and Fee(s) Due (PTOL-85).

UNITED STATES PATENT AND TRADEMARK OFFICE

Commissioner for Patents
United States Patent and Trademark Office
P.O. Box 1450
Alexandria, VA 22313-1450
www.uspto.gov

JANE E. GENNARO
ASSISTANT GENERAL COUNSEL, I.P.
NATIONAL STARCH AND CHEMICAL COMPANY
10 FINDERNE AVENUE
BRIDGEWATER, NJ 08807-0500

COPY MAILED

OCT 1 8 2004

OFFICE OF PETITIONS

In re Application of	:	
Ma et al.	:	
Application No. 10/020,638	:	ON PETITION
Filed: December 14, 2001	:	
Attorney Docket No. 1979.EEM	:	

This is a decision on the petition under 37 C.F.R. § 1.137(b), filed September 20, 2004, to revive the above-identified application.

The petition is **GRANTED.**

The above-identified application became abandoned for failure to submit Issue Fee Transmittal (PTOL-85b) in a timely manner in reply to the Notice of Allowance mailed June 2, 2004, which set a statutory period for reply of three (3) months. Accordingly, the above-identified application became abandoned on September 3, 2004.

Petitioner has met the requirements to revive the above-identified application pursuant to 37 CFR 1.137(b).

The issue fee and publication fee previously submitted on January 29, 2004 will now be applied towards the issue fee and publication fee required by the new Notice of Allowance.

This matter is now being referred to the Publishing Division for processing into a patent.

Telephone inquiries regarding this decision should be directed to the undersigned at (571) 272-3282.

Liana Chase
Petitions Examiner
Office of Petitions
Office of the Deputy Commissioner
for Patent Examination Policy

UNITED STATES PATENT AND TRADEMARK OFFICE

Commissioner for Patents
United States Patent and Trademark Office
P.O. Box 1450
Alexandria, VA 22313-1450
www.uspto.gov

JONATHAN M. WALDMAN
WOODCOCK WASHBURN LLP
ONE LIBERTY PLACE – 46TH FLOOR
PHILADELPHIA, PA 19103

COPY MAILED
APR 25 2006
OFFICE OF PETITIONS

In re Application of	:	
GRASON et al.	:	
Application No. 10/020,646	:	DECISION ON PETITION
Filed: October 30, 2001	:	TO WITHDRAW
Attorney Docket No. BELL-0155/01267	:	FROM RECORD
	:	

This is a decision on the Request to Withdraw as attorney or agent of record under 37 C.F.R. § 1.36(b), filed August 9, 2005.

The requests are **NOT APPROVED** as moot.

A review of the file record indicates that the power of attorney to Jonathan M. Waldman has been revoked by the assignee of the patent application. Accordingly, the request to withdraw under 37 C.F.R. § 1.36(b) is moot.

All future communications from the Office will continue to be directed to the below-listed address until otherwise notified by applicant.

Telephone inquires concerning this decision should be directed to the undersigned at 571-272-4787.

Denise Pothier
Petitions Examiner
Office of Petitions

cc: LEE & HAYES, PLLC
421 W. RIVERSIDE AVE.
SUITE 500
SPOKANE WA 99201

UNITED STATES PATENT AND TRADEMARK OFFICE

Commissioner for Patents
United States Patent and Trademark Office
P.O. Box 1450
Alexandria, VA 22313-1450
www.uspto.gov

COPY MAILED
APR 26 2006
OFFICE OF PETITIONS

JONATHAN M. WALDMAN
WOODCOCK WASHBURN LLP
ONE LIBERTY PLACE – 46TH FLOOR
PHILADELPHIA, PA 19103

~~COPY MAILED~~
~~APR 25 2006~~
~~OFFICE OF PETITIONS~~

In re Application of
GRASON et al.
Application No. 10/020,646
Filed: October 30, 2001
Attorney Docket No. BELL-0155/01267

DECISION ON PETITION
TO WITHDRAW
FROM RECORD

This is a decision on the Request to Withdraw as attorney or agent of record under 37 C.F.R. § 1.36(b), filed August 9, 2005.

The requests are **NOT APPROVED** as moot.

A review of the file record indicates that the power of attorney to Jonathan M. Waldman has been revoked by the assignee of the patent application. Accordingly, the request to withdraw under 37 C.F.R. § 1.36(b) is moot.

All future communications from the Office will continue to be directed to the below-listed address until otherwise notified by applicant.

Telephone inquires concerning this decision should be directed to the undersigned at 571-272-4787.

Denise Pothier
Petitions Examiner
Office of Petitions

cc: LEE & HAYES, PLLC
421 W. RIVERSIDE AVE.
SUITE 500
SPOKANE WA 99201

UNITED STATES PATENT AND TRADEMARK OFFICE

Commissioner for Patents
United States Patent and Trademark Office
P.O. Box 1450
Alexandria, VA 22313-1450
www.uspto.gov

JOHN W. ELDREDGE
MYERS DAWES ANDRAS SHERMAN LLP
19900 MAC ARTHUR BOULEVARD, SUITE 1150
IRVINE, CA 92612

COPY MAILED

MAY 3 1 2006

OFFICE OF PETITIONS

In re Application of :
Chin-Kuo Chou :
Application No. 10/020,670 :
Filed: December 12, 2001 :
Attorney Docket No. 12741-03/JWE :

ON PETITION

This is a decision on the petition filed February 13, 2006 under 37 CFR 1.137(b),[1] to revive the above-identified application.

The petition under 37 CFR 1.137 (b) is **GRANTED**.

This application became abandoned February 5, 2005 for failure to timely pay the issue fee on or before February 4, 2005, in response to the Notice of Allowance mailed November 4, 2004. Accordingly, a Notice of Abandonment was mailed March 14, 2005.

The issue fee, petition fee and publication fee have been applied. All other requirements of 37 CFR 1.137(b) having now been met, this application file is being forwarded to the Publishing Division to be processed into a patent.

Telephone inquiries concerning this matter may be directed to the undersigned Petitions Attorney at (571) 272-3212.

Patricia Faison-Ball
Senior Petitions Attorney
Office of Petitions

---

[1] Effective December 1, 1997, the provisions of 37 CFR 1.137(b) now provide that where the delay in reply was unintentional, a petition may be filed to revive an abandoned application or a lapsed patent pursuant to 37 CFR 1.137(b). A grantable petition filed under the provisions of 37 CFR 1.137(b) must be accompanied by:

(1) the required reply, unless previously filed. In a nonprovisional application abandoned for failure to prosecute, the required reply may be met by the filing of a continuing application. In a nonprovisional application filed on or after June 8, 1995, and abandoned for failure to prosecute, the required reply may also be met by the filing of a request for continued examination in compliance with § 1.114. In an application or patent, abandoned or lapsed for failure to pay the issue fee or any portion thereof, the required reply must be the payment of the issue fee or any outstanding balance thereof.

(2) the petition fee as set forth in 37 CFR 1.17(m);

(3) a statement that the entire delay in filing the required reply from the due date for the reply until the filing of a grantable petition pursuant to 37 CFR 1.137(b) was unintentional. The Commissioner may required additional information where there is a question whether the delay was unintentional; and

(4) any terminal disclaimer (and fee as set forth in 37 CFR 1.20(d)) required pursuant to 37 CFR 1.137(c)).

UNITED STATES PATENT AND TRADEMARK OFFICE

Commissioner for Patents
United States Patent and Trademark Office
P.O. Box 1450
Alexandria, VA 22313-1450
www.uspto.gov

PERKINS COIE LLP
P O BOX 2168
MENLO PARK, CA 94026

COPY MAILED

MAR 1 0 2005

OFFICE OF PETITIONS

In re Application of	:
Shi-Kun Huang et al	:
Application No. 10/020,671	: DECISION GRANTING PETITION
Filed: December 12, 2001	: UNDER 37 CFR 1.313(c)(2)
Attorney Docket No. 55325.8166.US01	:

This is a decision on the petition, filed March 9, 2005, under 37 CFR 1.313(c)(2) to withdraw the above-identified application from issue after payment of the issue fee.

The petition is **GRANTED**.

The above-identified application is withdrawn from issue for consideration of a submission under 37 CFR 1.114 (request for continued examination). See 37 CFR 1.313(c)(2).

Petitioner is advised that the issue fee paid on September 29, 2004 in the above-identified application cannot be refunded. If, however, the above-identified application is again allowed, petitioner may request that it be applied towards the issue fee required by the new Notice of Allowance.[1]

Telephone inquiries should be directed to the undersigned at (571) 272-3218.

This matter is being referred to Technology Center AU 1615 for processing of the request for continued examination under 37 CFR 1.114 filed October 1, 2004 and for appropriate consideration of the amendment and IDS filed therewith.

Frances Hicks
Petitions Examiner
Office of Petitions
Office of the Deputy Commissioner
for Patent Examination Policy

---

[1] *The request to apply the issue fee to the new Notice may be satisfied by completing and returning the new Issue Fee Transmittal Form PTOL-85(b), which includes the following language thereon: "Commissioner for Patents is requested to apply the Issue Fee and Publication Fee (if any) or re-apply any previously paid issue fee to the application identified above." Petitioner is advised that, whether a fee is indicated as being due or not, the Issue Fee Transmittal Form* **must** *be completed and timely submitted to avoid abandonment. Note the language in bold text on the first page of the Notice of Allowance and Fee(s) Due (PTOL-85).*

UNITED STATES PATENT AND TRADEMARK OFFICE

Commissioner for Patents
United States Patent and Trademark Office
P.O. Box 1450
Alexandria, VA22313-1450
www.uspto.gov

TROP PRUNER & HU, PC
1616 S. VOSS ROAD, SUITE 750
HOUSTON TX 77057-2631

COPY MAILED

APR 10 2007

OFFICE OF PETITIONS

In re Application of
Wah Yiu Kwong et al.
Application No. 10/020,701
Filed: December 12, 2001
Attorney Docket No: ITL.0681US(P12999)

ON PETITION

This is a decision on the petition to withdraw the holding of abandonment, filed March 5, 2007, under 37 CFR 1.181, in accordance with the reasoning of the decision in Delgar Inc. v. Schuyler, 172 USPQ 513.

The petition is **GRANTED**.

This application became abandoned on October 19, 2006, for failure to file a timely response to the Final Office Action mailed July 18, 2006, which set a three (3) month statutory period for reply. Accordingly, a Notice of Abandonment was mailed February 9, 2007. Petitioner asserts that the Final Office Action was never received.

The file record discloses that the Office Action was mailed to the address of record which is the same address used on all correspondences from the USPTO including the Notice of Abandonment. Petitioner has provided a copy of the case history which is generated from the docketing program to show that the Office Action mailed July 18, 2006 was not received. Petitioner also explains that after searching the file and docket records, where receipt of the office action would have been indicated if it had been received, it was concluded that no correspondence was received for this matter from the USPTO.

In that the statement from the petitioner and the exhibit from the docket record for the instant matter show no entry indicating receipt of the Final Office Action mailed July 18, 2006, it is apparent that it was not received. The evidence submitted corroborates non-receipt of the Office Action.

In view of the facts set forth in the petition, it is concluded that the Office Action was never received at the address of record. Accordingly, the holding of abandonment is withdrawn and no petition fee is due.

This matter is being referred to Technology Center 2136 for a re-mailing of the Final Office Action and for a restarting of the period for response.

Telephone inquiries concerning this matter should be directed to the undersigned Petitions Attorney at (571) 272-3212.

Patricia Faison-Ball

Patricia Faison-Ball
Senior Petitions Attorney
Office of Petitions

DPAC/IFW

IN THE UNITED STATES PATENT AND TRADEMARK OFFICE

OIPE IAP7 MAR 05 2007 PATENT & TRADEMARK OFFICE

Applicant:	WAH YIU KWONG ET AL.	Group Art Unit:	2136
Serial No.:	10/020,701	Examiner:	Ronald Baum
Filed:	December 12, 2001		
For:	Providing A User Input Interface Prior To Initiation Of An Operating System	Atty. Dkt. No.:	ITL.0681US (P12999)

Mail Stop Petitions
Commissioner for Patents
P.O. Box 1450
Alexandria, VA 22313-1450

PETITION TO WITHDRAW HOLDING OF ABANDONMENT

Dear Sir:

I hereby petition to withdraw the holding of abandonment in this case, on the basis of non-receipt of an Office Action dated July 16, 2006.

I hereby state:

1. We received a Notice of Abandonment dated February 9, 2007.
2. I have conducted a search of the file jacket and docket records and both indicate that a an Office Action dated July 16, 2006 was not received. Attached is a printout of the Case History which was generated from our docketing program which indicates that no Office Action was received.

In consideration of these submissions, it is respectfully requested that the holding of abandonment be withdrawn.

Please charge the petition fee (37 C.F.R. § 1.17(h)) and any fee deficiency to Deposit Account No. 20-1504 (ITL.0681US) or credit this account for any overpayment.

Respectfully submitted,

Date: 2/28/2007

03/06/2007 HGEBREM1 00000005 201504 10020701
01 FC:1464 130.00 DA

Timothy N. Trop, Registration No. 28,994
TROP, PRUNER & HU, P.C.
1616 S. Voss Rd., Suite 750
Houston, Texas 77057-2631
(713) 468-8880 [Phone]; (713) 468-8883 [Fax]

Date of Deposit: February 28, 2007
I certify under 37 CFR 1.8(a) that this correspondence is being deposited with the United States Postal Service as first class mail with sufficient postage on the date indicated above and is addressed to Mail Stop Petition, Commissioner for Patents, P.O. Box 1450, Alexandria, VA 22313-1450.

Sherry Tipton

UNITED STATES PATENT AND TRADEMARK OFFICE

COMMISSIONER FOR PATENTS
UNITED STATES PATENT AND TRADEMARK OFFICE
P.O. BOX 1450
ALEXANDRIA, VA 22313-1450
WWW.USPTO.GOV

Paper No. None

LAW OFFICE OF KAREN DANA OSTER, LLC
PMB 1020
15450 SW BOONES FERRY ROAD #9
LAKE OSWEGO OR 97035

COPY MAILED

OCT 25 2004

OFFICE OF PETITIONS

In re Application of :
Julie A. Campbell and Lawrence W. Jacobs :
Application No. 10/020,707 :
Filed: December 13, 2001 :
Title: ELECTRICAL TEST PROBE :
FLEXIBLE SPRING TIP :

DECISION ON PETITION

This is a decision on the petition pursuant to 37 CFR §1.78(a)(3), filed February 4, 2004, and supplemental petitions filed both on August 25, 2004 and September 21, 2004, to accept an unintentionally delayed claim under 35 U.S.C. §120 and 365(c) for the benefit of priority to prior-filed PCT and non-provisional applications set forth in the amendment submitted on August 25, 2004.

The petition is **GRANTED**.

A petition for acceptance of a claim for late priority under 37 CFR 1.78(a)(3) is only applicable to those applications filed on or after November 29, 2000. Further, the petition is appropriate only after the expiration of the period specified in 37 CFR 1.78(a)(2)(ii). In addition, the petition under 37 CFR 1.78(a)(3) must be accompanied by:

(1) the reference required by 35 U.S.C. § 120 and 37 CFR §1.78(a)(2)(i) of the prior-filed application, unless previously submitted;
(2) the surcharge set forth in § 1.17(t); and
(3) a statement that the entire delay between the date the claim was due under 37 CFR 1.78(a)(2)(ii) and the date the claim was filed was unintentional. The Commissioner may require additional information where there is a question whether the delay was unintentional.

The instant pending application was filed on December 13, 2001. Though the first sentence of the specification as originally filed included a claim for benefit to prior filed provisional application 60/221,716, nonprovisional application 09/895,060, and international application PCT/US01/24017, it failed to identify the relationship of the instant application to the international and nonprovisional applications, and, accordingly, the reference requirement under 37 C.F.R. §1.78(a)(2)(i) was not satisfied. A proper refrence to the prior-filed PCT and

nonprovisional applications has now been included in an amendment to the first sentence of the specification following the title, as required by 37 C.F.R. §1.78(a)(2)(ii).

The instant nonprovisional application was filed after November 29, 2000, and the claim herein for the benefit of priority to the prior-filed PCT and nonprovisional applications is submitted after expiration of the period specified in 37 CFR 1.78(a)(2)(ii). Accordingly, having found that the instant petition for acceptance of an unintentionally delayed claim for the benefit of priority under 35 U.S.C. §§ 120 and 365(c) to the prior-filed international and non-provisional applications satisfies the conditions of 37 CFR §1.78(a)(3), the petition is granted.

The granting of the petition to accept the delayed benefit claim to the prior-filed application under 37 CFR 1.78(a)(3) should not be construed as meaning that the instant application is entitled to the benefit of the prior-filed application. In order for the instant application to be entitled to the benefit of the prior-filed application, all other requirements under 35 U.S.C. § 120 and 37 CFR 1.78(a)(1) and (a)(2) must be met. Similarly, the fact that the corrected Filing Receipt accompanying this decision on petition includes the prior-filed application should not be construed as meaning that applicant is entitled to the claim for benefit of priority to the prior-filed application noted thereon. Accordingly, the examiner will, in due course, consider this benefit claim and determine whether the instant application is entitled to the benefit of the earlier filing date.

A corrected Filing Receipt, which includes the priority claim to the prior-filed application, accompanies this decision on petition.

The general phone number for the Office of Petitions which should be used for status requests is (571) 272-3282. Telephone inquiries regarding this decision should be directed to the undersigned at (571) 272-3225.

Questions pertaining to this application should be directed towards the Office of Patent Publication at (703) 305-8497.

This application is being forwarded to the examiner of Technology Center Art Unit 2833 for appropriate action on the amendments filed August 25, 2004 and September 21, 2004, including consideration of applicant's entitlement to claim benefit of priority under 35 U.S.C. §§ 120 and 365(c) to prior-filed PCT Application No. PCT/US01/24017 filed July 30, 2001, and nonprovisional application 09/895,060, filed June 29, 2001.

Charles Pearson
Director of the Office of Petitions
Office of Petitions
United States Patent and Trademark Office

Attachment. Corrected Filing Receipt

UNITED STATES PATENT AND TRADEMARK OFFICE

COMMISSIONER FOR PATENTS
UNITED STATES PATENT AND TRADEMARK OFFICE
P.O. BOX 1450
ALEXANDRIA, VA 22313-1450
WWW.USPTO.GOV

Paper No. 10

THE PROCTER & GAMBLE COMPANY
INTELLECTUAL PROPERTY DIVISION
WINTON HILL TECHNICAL CENTER - BOX 161
6110 CENTER HILL AVENUE
CINCINNATI, OH 45224

COPY MAILED

JUN 1 9 2003

OFFICE OF PETITIONS

In re Application of	:	
Jan (nmn) Bertrem et al	:	
Application No. 10/020,710	:	ON PETITION
Filed: December 14, 2001	:	
Attorney Docket No. CM-2147M	:	

This is a decision on the petition under 37 CFR 1.137(b), filed by facsimile transmission on June 12, 2003, to revive the above-identified application.

The petition is **GRANTED**.

The above-identified application became abandoned for failure to reply in a timely manner to the non-final Office action mailed December 5, 2002, which set a shortened statutory period for reply of three (3) months. No extensions of time under the provisions of 37 CFR 1.136(a) were obtained. Accordingly, the above-identified application became abandoned on March 6, 2003.

Pursuant to petitioner's authorization, Deposit Account No. 16-2480 was charged $1,300.00 for the petition to revive an unintentionally abandoned application.

Telephone inquiries concerning this decision should be directed to Wan Laymon at (703) 305-9282.

The application file is being forwarded to Technology Center AU 1751.

Wan Laymon
Petitions Examiner
Office of Petitions
Office of the Deputy Commissioner
for Patent Examination Policy

UNITED STATES PATENT AND TRADEMARK OFFICE

Commissioner for Patents
United States Patent and Trademark Office
Washington, D.C. 20231
www.uspto.gov

Paper No. 3

John G. Rauch
Brinks Hofer Gilson & Lione
PO Box 10395
Chicago, IL 60610

COPY MAILED

MAR - 7 2002

OFFICE OF PETITIONS

In re Application of :
Paine et al. :
Application No. 10/020,712 :
Filed: December 11, 2001 :
Attorney Docket No. 9623/378 :

ON PETITION

This is a decision on the petition under 37 C.F.R. § 1.183, filed February 19, 2002, to waive 37 CFR 1.52(e).

When a compact disc has been submitted as part of an application, one is required to list the files on the disc in the application and on the transmittal sheet. In the instant case, applicant seeks a waiver of the requirement and seeks to submit such a listing on compact disc rather than in the application and on the transmittal sheet.

The petition is **granted**.

Petitioner has demonstrated that a listing of the files would be over 1,000 pages long. Petitioner has submitted a "table" on the compact disc listing each file on the disc by file name, file size, and creation date.

Petitioner should note that petitioner, and not the Office, is responsible for identifying and correcting any difference between the file list on the compact disc and the files actually on the compact disc.

The file is being forwarded to the Office of Initial Patent Examination for further processing.

Telephone inquiries should be directed to Petitions Attorney Steven Brantley at (703) 306-5683.

Beverly M. Flanagan
Supervisory Petitions Examiner
Office of Petitions
Office of the Deputy Commissioner
for Patent Examination Policy

UNITED STATES PATENT AND TRADEMARK OFFICE

COMMISSIONER FOR PATENTS
UNITED STATES PATENT AND TRADEMARK OFFICE
WASHINGTON, D.C. 20231
www.uspto.gov

Paper No. 6

BRINKS HOFER GILSON & LIONE
P O BOX 10395
CHICAGO, IL 60610

COPY MAILED

SEP 1 6 2002

OFFICE OF PETITIONS

In re Application of
Mark Paine et al
Application No. 10/020,712
Filed: December 11, 2001
Attorney Docket No. 9623/378

NOTICE

This is a notice regarding your request for acceptance of a fee deficiency submission under 37 CFR 1.28. On September 1, 1998, the Court of Appeals for the Federal Circuit held that 37 CFR 1.28(c) is the sole provision governing the time for correction of the erroneous payment of the issue fee as a small entity. **See DH Technology v. Synergystex International, Inc. 154 F.3d 1333, 47 USPQ2d 1865 (Fed. Cir. Sept. 1, 1998).**

The Office no longer investigates or rejects original or reissue applications under 37 CFR 1.56. **1098 Off. Gaz. Pat. Office 502 (January 3, 1989)**. Therefore, nothing in this Notice is intended to imply that an investigation was done.

Your fee deficiency submission under 37 CFR 1.28 is hereby **ACCEPTED**.

Inquiries related to this communication should be directed to the Office of Petitions Staff at (703) 305-9285.

This file is being forwarded to the Office of Initial Patent Examination.

Wan Laymon
Petitions Examiner
Office of Petitions
Office of the Deputy Commissioner
for Patent Examination Policy

UNITED STATES PATENT AND TRADEMARK OFFICE

Commissioner for Patents
United States Patent and Trademark Office
P.O. Box 1450
Alexandria, VA 22313-1450
www.uspto.gov

CHRISTIE, PARKER & HALE, LLP
PO BOX 7068
PASADENA CA 91109-7068

COPY MAILED
APR 12 2005
OFFICE OF PETITIONS

In re Application of
Phillip j. Kellman
Application No. 10/020,718
Filed: December 14, 2001
Attorney Docket No. 42055/SAH/K415

: DECISION GRANTING PETITION

This is a decision on the petition, filed March 10, 2005, under 37 CFR 1.137(f) which is treated as a petition to revive the above-identified nonprovisional application under the unintentional provisions of 37 CFR 1.137(b).

The petition is **GRANTED**.

Petitioner states that the present nonprovisional application is the subject of a foreign or international application filed on December 13, 2002. However, the U.S. Patent and Trademark Office was unintentionally not notified of this filing within 45 days subsequent to the filing of the subject application in a foreign country.

In view of the above, this application became abandoned pursuant to 35 U.S.C. § 122(b)(2)(B)(iii) and 37 CFR 1.213(c) for failure to timely notify the Office of the filing of an application in a foreign country, or under a multilateral international agreement, that requires publication of applications 18 months after filing.

A petition under 37 CFR 1.137(f) must be accompanied by:

(1) the reply which is met by the notification of such filing in a foreign country or under a multinational treaty;

(2) the petition fee as set forth in 37 CFR 1.17(m); and

(3) a statement that the entire delay in filing the required reply from the due date of the reply until the filing of a grantable petition was unintentional.

The present petition has been found to be in compliance with 37 CFR 1.137(f). Accordingly, the failure to timely notify the Office of a foreign or international filing within

45 days after the date of filing of such foreign or international application as provided by 35 U.S.C. § 122(b)(2)(B)(I) has been rescinded. A publication date will be communicated to the applicants in due course.

The petition fee in the amount of $1500.00 has been charged to deposit account no. 03-1728 per the authorization in the petition.

This matter is referred to Technology Center 3714 for further examination in due course.

Telephone inquiries related to this decision should be directed to the undersigned Petitions Attorney at (571) 272-3212.

Patricia Faison-Ball

Patricia Faison-Ball
Senior Petitions Attorney
Office of Petitions

UNITED STATES PATENT AND TRADEMARK OFFICE

UNDER SECRETARY OF COMMERCE FOR INTELLECTUAL PROPERTY AND
DIRECTOR OF THE UNITED STATES PATENT AND TRADEMARK OFFICE
WASHINGTON, DC 20231
www.uspto.gov

MAILED

MAR 12 2003

DIRECTOR'S OFFICE
TECHNOLOGY CENTER 3600

Cantor Colburn LLP
55 Griffin Road South
Bloomfield, CT 06002

Paper No. 5

In re application of
Seth P. Becker et al.
Application No. 10/020,728
Filed: October 29, 2001
For: METHOD AND SYSTEM FOR PROVIDING REGISTRATION AND LOSS PROTECTION SERVICES TO CONSUMER JEWELRY OWNERS

DECISION ON PETITION TO MAKE SPECIAL (ACCELERATED EXAMINATION)

This is in response to the petition filed on December 2, 2002 to make the above-identified application special on the basis of special examining procedure for certain new applications - accelerated examination as set forth in MPEP § 708.02 VIII.

The requirements for granting special status under this section are: (A) a petition to make special accompanied by the fee set forth in 37 CFR 1.17(i); (B) all claims being directed to a single invention, or an election without traverse if the Office determines that all the claims are not directed to a single invention; (C) a statement that a pre-examination search was made listing the field of search; (D) one copy of each of the references deemed most closely related to the subject matter encompassed by the claims if said references are not already of record; and (E) a detailed discussion of how the claimed subject matter is patentable over the references in accordance with 37 CFR 1.111 (b) and (c).

The petition filed December 2, 2002 fails to adequately meet requirement (E) above. The petition only discusses a single reference. However, an Information Disclosure Statement (IDS) filed March 15, 2002 lists six additional references, including non-patent literature. Since these references apparently are also closely related to the subject matter encompassed by the invention, it is required that applicant also provide a detailed discussion of how the claimed subject matter is patentable over these references in accordance with 37 CFR 1.111 (b) and (c).

For the above stated reasons, the petition is **DISMISSED**.

Petitioner is given one more opportunity to perfect the petition. Any request for reconsideration must be filed within TWO MONTHS of the date of this decision. Extensions of time under 37 CFR 1.136(a) are permitted.

SUMMARY: Petition to Make Special **DISMISSED**.

Applicant should promptly submit a renewed petition to the Commissioner of Patents and Trademarks, Washington, D.C. 20231. The envelope should indicate that the correspondence be brought to the attention of Technology Center 3600.

Until the renewed petition is submitted, the application will be returned to the examiner's docket to await treatment on the merits in the normal order of examination.

Kenneth J. Dorner
Special Programs Examiner
Technology Center 3600
(703) 308-0866
(703) 605-0586

KJD/tpl: 2/28/03

UNITED STATES PATENT AND TRADEMARK OFFICE

UNDER SECRETARY OF COMMERCE FOR INTELLECTUAL PROPERTY AND
DIRECTOR OF THE UNITED STATES PATENT AND TRADEMARK OFFICE
WASHINGTON, DC 20231
www.uspto.gov

MAILED

APR 14 2003

DIRECTOR'S OFFICE
TECHNOLOGY CENTER 3600

Cantor Colburn LLP
55 Griffin Road South
Bloomfield, CT 06002

Paper No. 7

In re application of Seth P. Becker et al. Application No. 10/020,728 Filed: October 29, 2001 For: METHOD AND SYSTEM FOR PROVIDING REGISTRATION AND LOSS PROTECTION SERVICES TO CONSUMER JEWELRY OWNERS	: : : : :	DECISION ON RENEWED PETITION TO MAKE SPECIAL (ACCELERATED EXAMINATION)

This is in response to the renewed petition filed on March 24, 2003 to make the above-identified application special on the basis of special examining procedure for certain new applications - accelerated examination as set forth in MPEP § 708.02 VIII

The requirements for granting special status under this section are: (A) a petition to make special accompanied by the fee set forth in 37 CFR 1.17(i); (B) all claims being directed to a single invention, or an election without traverse if the Office determines that all the claims are not directed to a single invention; (C) a statement that a pre-examination search was made listing the field of search; (D) one copy of each of the references deemed most closely related to the subject matter encompassed by the claims if said references are not already of record; and (E) a detailed discussion of how the claimed subject matter is patentable over the references.

Since the requirement lacking in the original petition of December 2, 2002 has now been supplied, all the items above required for special status under MPEP § 708.02 VIII have been met, the petition is **GRANTED**.

The examiner is directed (1) to make an interference search for possible interfering applications, (2) to promptly examine this application out of turn, and (3) if any interfering application is discovered, to examine such application simultaneously and state in the first official letter of such application that it is being taken out of turn because of a possible interference.

Petitioner is advised that this application will continue to be special, throughout its entire prosecution and pendency, including interference or appeal, if any, only if petitioner makes a prompt ***bona fide*** effort, in response to each Office action, to place the application in condition for allowance, even if it is necessary to conduct an interview with the examiner to accomplish this purpose.

SUMMARY: Petition to Make Special **GRANTED**.

Steven N. Meyers
Special Programs Examiner
Technology Center 3600
(703) 308-3868
(703) 605-0586 (facsimile)

SNM/tpl: 4/10/03

UNITED STATES PATENT AND TRADEMARK OFFICE

Commissioner for Patents
United States Patent and Trademark Office
P.O. Box 1450
Alexandria, VA 22313-1450
www.uspto.gov

Hewlett Packard Company
PO Box 272400
3404 E. Harmony Road
Intellectual Property Administration
Fort Collins, CO 80527-2400

COPY MAILED

SEP 2 7 2005

OFFICE OF PETITIONS

In re Application of
McNamara et al.
Application No. 10/020,729
Filed: December 12, 2001
Attorney Docket No. 200301830-1

DECISION ON PETITION

This is a decision on the petition under 37 CFR 1.137(a),[1] filed on August 5, 2004, to revive the above-identified application, which is first being treated as a petition to withdraw the holding of abandonment.

The application became abandoned on November 18, 2004, for failure to respond timely to the final Office action mailed on August 17, 2004, which set a three-month shortened statutory period for reply. A Notice of Abandonment was mailed on May 16, 2005.

In the present petition, petitioners asserted that their failure to respond in a timely manner was unavoidable due to non-receipt of the final Office action. In support of the assertion, petitioners submitted a declaration of Maria Carroll, the Legal Administrator in charge of maintaining the corporate mail log for formal papers received by Hewlett-Packard Co. ("HP) from the USPTO, and a copy of HP's mail log of documents received from the USPTO during the period from August 15,

[1] A grantable petition to revive an abandoned application under 37 CFR 1.137(a) must be accompanied by:

(1) The required reply to the outstanding Office action or notice, unless previously filed. In a nonprovisional application abandoned for failure to prosecute, the required reply may be met by the filing of a continuing application. In a nonprovisional utility or plant application filed on or after June 8, 1995, and abandoned for failure to prosecute, the required reply may also be met by the filing of a request for continued examination in compliance with § 1.114. In an application or patent, abandoned or lapsed for failure to pay the issue fee or any portion thereof, the required reply must include payment of the issue fee or any outstanding balance thereof. In an application, abandoned for failure to pay the publication fee, the required reply must include payment of the publication fee.

(2) The petition fee as set forth in 37 CFR 1.17(l);

(3) A showing to the satisfaction of the Director that the entire delay in filing the required reply from the due date for the reply until the filing of a grantable petition pursuant to 37 CFR 1.137(a) was unavoidable; and

(4) Any terminal disclaimer (and fee as set forth in 37 CFR 1.20(d)) required pursuant to 37 CFR 1.137(c)).

2004 through August 31, 2004. Petitioners averred that these documents clearly show that HP did not receive the final Office action during the month period when the USPTO alleged it mailed the communication.

PETITION TO WITHDRAW THE HOLDING OF ABANDONMENT

A review of the record indicates no irregularity in the mailing of the final Office action, and in the absence of any irregularity in the mailing, there is a strong presumption that the Notice was properly mailed to the address of record as it existed on August 17, 2004. This presumption may be overcome by a showing that the Notice was not in fact received. The showing required to establish non-receipt of an Office communication must include a statement from the practitioner stating that the Office communication was not received by the practitioner and attesting to the fact that a search of the file jacket and docket records indicates that the Office communication was not received. A copy of the docket record where the non-received Office communication would have been entered had it been received and docketed must be attached to and referenced in practitioner's statement.[2] For example, if a three month period for reply was set in the non-received Office action, a copy of the docket report showing all replies docketed for a date three months from the mail date of the non-received Office action must be submitted as documentary proof of non-receipt of the Office action. The showing outlined above may not be sufficient if there are circumstances that point to a conclusion that the Office action may have been lost after receipt rather than a conclusion that the Office action was lost in the mail (e.g. if the practitioner has a history of not receiving Office actions).

The showing of record is insufficient to warrant withdrawal of the holding of abandonment. A review of the record indicates that the USPTO mailed the final Office action to Morgan, Lewis & Bockius, LLP, 2 Palo Alto Square, 3000 El Camino Real, Palo Alto, California, 94306, the address of record as of August 17, 2004. Moreover, after reviewing HP's docket records, it appears that the final Office action was mailed by the USPTO to Morgan, Lewis & Bockius, and thereafter, forwarded by that law firm to HP. Because the USPTO mailed the final Office action to Morgan, Lewis & Bockius, HP's docket records for that period are irrelevant. More importantly, in her Declaration, Ms. Carroll declared that her responsibilities included maintaining a corporate mail log of formal papers received from the USPTO "... addressed to the Hewlett-Packard Company, Intellectual Property Administration." *Declaration of Maria Carroll dated August 2, 2005, p. 1.* Accordingly, the Declaration of Ms. Carroll is not evidence of non-receipt because the final Office action was not addressed to Hewlett-Packard Company, Intellectual Property Administration.

To demonstrated non-receipt of the final Office action, petitioners must submit a copy of docket reports of Morgan, Lewis & Bockius, showing all replies docketed for a date three months from the mail date of the final Office action, as well as a statement from a practitioner at the law firm attesting to the fact that a search of the file jacket and docket records indicates that the final Office action was not received by the practitioner. Lastly, petitioners must show they did not lose the final Office action after it was received by Morgan, Lewis & Bockius, and thereafter, forwarded to HP. As petitioners

---

[2] M.P.E.P. § 711.03(c); See Notice entitled "Withdrawing the Holding of Abandonment When Office Actions Are Not Received," 1156 O.G. 53 (November 16, 1993).

have not presented the required showing, the petition to withdraw the holding of abandonment is dismissed.

REQUIREMENT FOR REPLY

It does not appear that petitioners submitted a response to the final Office action previously or with the present petition. The proposed reply required for consideration of a petition to revive **must** be a Notice of Appeal (and fee required by law), an amendment that prima facie places the application in condition for allowance, the filing of a continuing application, or a request for continued examination under 37 CFR 1.114 with a proper submission and fee. Before the application can be revived, petitioners must file a proper reply as required by the final Office action with any renewed petition. Petitioners may view the final Office action on PAIR, as the application has been published.

PETITION UNDER 37 CFR 1.137(a)

The Director may revive an abandoned application if the delay in responding to the relevant outstanding Office requirement is shown to the satisfaction of the Director to be "unavoidable".[3] Decisions on reviving abandoned applications on the basis of "unavoidable" delay have adopted the reasonably prudent person standard in determining if the delay was unavoidable:

> The word 'unavoidable' . . . is applicable to ordinary human affairs, and requires no more or greater care or diligence than is generally used and observed by prudent and careful men in relation to their most important business. It permits them in the exercise of this care to rely upon the ordinary and trustworthy agencies of mail and telegraph, worthy and reliable employees, and such other means and instrumentalities as are usually employed in such important business. If unexpectedly, or through the unforeseen fault or imperfection of these agencies and instrumentalities, there occurs a failure, it may properly be said to be unavoidable, all other conditions of promptness in its rectification being present.[4]

The showing of record is inadequate to establish unavoidable delay within the meaning of 35 U.S.C. § 133 and 37 CFR 1.137(a).[5] Specifically, an application is "unavoidably" abandoned only where petitioner, or counsel for petitioner, takes all action necessary for a proper response to the outstanding Office action, but through the intervention of unforeseen circumstances, such as failure of mail,

---

[3] 35 U.S.C. § 133.

[4] In re Mattullath, 38 App. D.C. 497, 514-15 (1912)(quoting Ex parte Pratt, 1887 Dec. Comm'r Pat. 31, 32-33 (1887)); see also Winkler v. Ladd, 221 F. Supp. 550, 552, 138 USPQ 666, 167-68 (D.D.C. 1963), aff'd, 143 USPQ 172 (D.C. Cir. 1963); Ex parte Henrich, 1913 Dec. Comm'r Pat. 139, 141 (1913). In addition, decisions on revival are made on a "case-by-case basis, taking all the facts and circumstances into account." Smith v. Mossinghoff, 671 F.2d 533, 538, 213 USPQ 977, 982 (D.C. Cir. 1982). Finally, a petition cannot be granted where a petitioner has failed to meet his or her burden of establishing that the delay was "unavoidable." Haines v. Quigg, 673 F. Supp. 314, 316-17, 5 USPQ2d 1130, 1131-32 (N.D. Ind. 1987).

[5] See MPEP 711(c)(III)(C)(2) for a discussion of the requirements for a showing of unavoidable delay.

telegraph, facsimile, or the negligence of otherwise reliable employees, the response is not timely received in the Office.[6]

A delay is not unavoidable when an applicant fails to comply with a requirement set forth in an Office communication, which necessitates a response within a specified time period. Additionally, petitioner did not demonstrate that the delay was unavoidable due to non-receipt of the Notice.

As previously stated, the written record indicates that the USPTO properly mailed the final Office action to the address of record as it existed on August 17, 2004. However, it appears that petitioners filed a change of correspondence address in this application on September 12, 2005. A belated notification to the USPTO of a change of correspondence address does not constitute proper notification as to establish unavoidable delay. An applicant is responsible for promptly informing the Office of any change of address. The Office further notes that where an application becomes abandoned as a consequence of a change of correspondence address (the Office action being mailed to the old, uncorrected address and failing to reach the applicant in sufficient time to permit a timely reply) an adequate showing of "unavoidable" delay requires a showing that applicant exercised due care to promptly notify the Office of the change of address and file a timely notification of the change of address in the application at hand.[5] Furthermore, a delay resulting from the lack of knowledge or improper application of the patent statute, rules of practice or the MPEP does not constitute an "unavoidable" delay.[6]

Because applicant did not provide a sufficient showing that the delay was unavoidable within the meaning of 35 U.S.C. § 151 and 37 CFR 1.137(a), the petition is **dismissed**. In any renewed petition under 37 CFR 1.137(a), petitioners must submit a thorough explanation, including any documentary evidence, to support a showing of unavoidable delay.

Any request for reconsideration of this decision must be submitted within **TWO (2) MONTHS** from the mail date of this decision. The reconsideration request should include a cover letter entitled "Renewed Petition under 37 CFR 1.137(a)." Extensions of time are permitted under 37 CFR 1.136(a).

ALTERNATIVE VENUE

Petitioners are encouraged to consider filing a petition under 37 CFR 1.137(b) to revive an unintentionally abandoned application instead of filing a renewed petition under 37 CFR 1.137(a).

---

[6] Ex parte Pratt, 1887 Dec. Comm'r Pat. 31 (Comm'r Pat. 1887).

[5] MPEP 711.03(c)(III)(C)(2); See MPEP 601.03.

[6] See Haines v. Quigg, 673 F. Supp. 314, 317, 5 USPQ2d 1130, 1132 (N.D. Ind. 1987), Vincent v. Mossinghoff, 230 USPQ 621, 624 (D.D.C. 1985); Smith v. Diamond, 209 USPQ 1091 (D.D.C. 1981); Potter v. Dann, 201 USPQ 574 (D.D.C. 1978); Ex parte Murray, 1891 Dec. Comm'r Pat. 130, 131 (1891).

A grantable petition pursuant to 37 CFR 1.137(b) must be accompanied by:

(1) The reply required to the outstanding Office action or notice, unless previously filed. In nonprovisional application abandoned for failure to prosecute, the required reply may be met by the filing of a continuing application. In a nonprovisional utility or plant application filed on or after June 8, 1995, and abandoned for failure to prosecute, the required reply may also be met by the filing of a request for continued examination in compliance with § 114. In an application or patent, abandoned or lapsed for failure to pay the issue fee or any portion thereof, the required reply must include payment of the issue fee or any outstanding balance. In an application, abandoned for failure to pay the publication fee, the required reply must include payment of the publication fee.

(2) The petition fee as set forth in 37 CFR 1.17(m), **an additional** $1,500.00 for a large entity and $750.00 for a small entity;

(3) A statement that the entire delay in filing the required reply from the due date for the reply until the filing of a grantable petition pursuant to this paragraph was unintentional. The Director may require additional information where there is a question whether the delay was unintentional; and

(4) Any terminal disclaimer (and fee set forth in § 1.20(d)) required pursuant to paragraph (d) of this section.

Further correspondence with respect to this matter should be addressed as follows and **to the attention of Senior Petitions Attorney Christina Tartera Donnell:**

By mail: Mail Stop Petition
Commissioner for Patents
P.O. Box 1450
Alexandria, VA 22313-1450

By FAX: (571) 273-8300
Attn: Office of Petitions

By hand: Customer Service Window
Randolph Building
401 Dulany Street
Alexandria, VA 22314

Telephone inquiries related to this decision may be directed to the undersigned at (571) 272-3211.

Christina Tartera Donnell

Christina Tartera Donnell
Senior Petitions Attorney
Office of Petitions

UNITED STATES PATENT AND TRADEMARK OFFICE

Commissioner for Patents
United States Patent and Trademark Office
P.O. Box 1450
Alexandria, VA 22313-1450
www.uspto.gov

Hewlett Packard Company
PO Box 272400
3404 E. Harmony Road
Intellectual Property Administration
Fort Collins, CO 80527-2400

COPY MAILED

DEC 2 0 2005

OFFICE OF PETITIONS

In re Application of	:	
McNamara et al.	:	
Application No. 10/020,729	:	DECISION ON PETITION
Filed: December 12, 2001	:	
Attorney Docket No. 200301830-1	:	

This is a decision on the petition under 37 CFR 1.137(b), filed on November 23, 2005, to revive the above-identified application.

The application became abandoned on November 18, 2004, for failure to respond timely to the final Office action mailed on August 17, 2004, which set a three-month shortened statutory period for reply. A Notice of Abandonment was mailed on May 16, 2005.

Petitioner has met the requirements to revive the above-identified application pursuant to 37 CFR 1.137(b). Petitioner submitted the required reply in the form of an amendment, paid the petition fee, and made the proper statement of unintentional delay. Accordingly, the petition is **granted.**

This matter is being referred to Technology Center Art Unit 2676.

Telephone inquiries related to this decision may be directed to the undersigned at (571) 272-3211.

Christina T. Donnell

Christina Tartera Donnell
Senior Petitions Attorney
Office of Petitions

UNITED STATES PATENT AND TRADEMARK OFFICE

Commissioner for Patents
United States Patent and Trademark Office
P.O. Box 1450
Alexandria, VA 22313-1450
www.uspto.gov

LAW OFFICE OF ROBERT O. BLINN
P.O. BOX 75144
WICHITA KS 57275-0144

COPY MAILED

JUN 19 2007

OFFICE OF PETITIONS

In re Application of	:	
Miller, Michael D.	:	
Application No. 10/020,739	:	ON PETITION
Filed: December 18, 2001	:	
Attorney Docket No. 07487	:	

This is a decision on the petition under 37 C.F.R. § 1.137(b), filed April 30, 2007, to revive the above-identified application.

The petition is **GRANTED.**

The petition satisfies the conditions for revival pursuant to the provisions of 37 CFR 1.137(b) in that (1) the reply in the form of a Request for Continued Examination (RCE) and an Amendment; (2) the petition fee; and (3) the required statement of unintentional delay have been received. Accordingly, the response has been accepted as having been unintentionally delayed.

This matter is being referred to Technology Center 3700 for processing of the Request for Continued Examination under 37 CFR 1.114 filed with the instant petition.

Telephone inquiries regarding this decision should be directed to the undersigned at (571) 272-3206.

Liana Walsh
Petitions Examiner
Office of Petitions

UNITED STATES PATENT AND TRADEMARK OFFICE

Commissioner for Patents
United States Patent and Trademark Office
P.O. Box 1450
Alexandria, VA 22313-1450
www.uspto.gov

JJGJr: 08-05

Paper No: __

TRASK BRITT
P.O. BOX 2550
SALT LAKE CITY UT 84110

COPY MAILED
AUG 0 5 2005
OFFICE OF PETITIONS

In re Application of	:	
Dennison, et al.	:	
Application No. 10/020,741	:	DECISION ON PETITION
Filed: 12 December, 2001	:	
Attorney Docket No.: 2269-3259.1US (91-0473.02/RE)	:	

This is a decision on the petition filed on 25 May, 2005, under 37 C.F.R. §1.183, to waive provisions of 37 C.F.R. §1.67 and §1.172.

For the reasons set forth below, the petition under 37 C.F.R. §1.183 to waive provisions of 37 C.F.R. §1.67 and §1.172 is **GRANTED**.

BACKGROUND

The record reflects that:

- the instant application, filed on 12 December, 2001, is a reissue application of Patent No. 5,270,241, which issued on 14 December, 1993;
- in an *Ex parte Quayle* action mailed on 10 January, 2005, with reply due absent extension of time on or before 10 March, 2005, the Examiner required a supplemental re-issue oath/declaration;
- Petitioner herein alleges that, while co-inventor Michael A. Walker executed the requisite

oath/declaration, efforts to obtain the signature of co-inventor Charles H. Dennison (Mr. Dennison) have been unsuccessful, as reported and supported by the Declaration of Petitioner Joseph Walkowski (Reg. No. 28,765) that copies of the original patent, the instant application and the allowed claims were transmitted to Mr. Dennison along with the supplemental reissue oath/declaration

- however, despite Petitioner's diligence and follow-up inquiry(ies), as of the filing of the instant petition Petitioner received no response from Mr. Dennison and/or Mr. Dennison otherwise has failed to sign the declaration.

ANALYSIS

Having failed to obtain for filing the required fully executed declaration under 37 C.F.R. 37 C.F.R. §1.67[1] §1.172,[2] Petitioner:

---

[1] The regulations at 37 C.F.R. §1.67 provide:

§ 1.67 Supplemental oath or declaration.
(a) The Office may require, or inventors and applicants may submit, a supplemental oath or declaration meeting the requirements of §1.63 or § 1.162 to correct any deficiencies or inaccuracies present in the earlier filed oath or declaration.
(1) Deficiencies or inaccuracies relating to all the inventors or applicants (§§ 1.42, 1.43, or § 1.47) may be corrected with a supplemental oath or declaration signed by all the inventors or applicants.
(2) Deficiencies or inaccuracies relating to fewer than all of the inventor(s) or applicant(s) (§§ 1.42, 1.43 or § 1.47) may be corrected with a supplemental oath or declaration identifying the entire inventive entity but signed only by the inventor(s) or applicant(s) to whom the error or deficiency relates.
(3) Deficiencies or inaccuracies due to the failure to meet the requirements of § 1.63(c) (*e.g.*, to correct the omission of a mailing address of an inventor) in an oath or declaration may be corrected with an application data sheet in accordance with § 1.76.
(4) Submission of a supplemental oath or declaration or an application data sheet (§ 1.76), as opposed to who must sign the supplemental oath or declaration or an application data sheet, is governed by § 1.33(a)(2) and paragraph (b) of this section.
(b) A supplemental oath or declaration meeting the requirements of § 1.63 must be filed when a claim is presented for matter originally shown or described but not substantially embraced in the statement of invention or claims originally presented or when an oath or declaration submitted in accordance with § 1.53(f) after the filing of the specification and any required drawings specifically and improperly refers to an amendment which includes new matter. No new matter may be introduced into a nonprovisional application after its filing date even if a supplemental oath or declaration is filed. In proper situations, the oath or declaration here required may be made on information and belief by an applicant other than the inventor.
(c) [Reserved]
[48 FR 2711, Jan. 20, 1983, effective Feb. 27, 1983; para. (c) added, 57 FR 2021, Jan. 17, 1992, effective Mar. 16, 1992; para. (b) revised, 60 FR 20195, Apr. 25, 1995, effective June 8, 1995; para. (b) revised, 62 FR 53131, Oct. 10, 1997, effective Dec. 1, 1997; para. (a) revised and para. (c) removed and reserved, 65 FR 54604, Sept. 8, 2000, effective Nov. 7, 2000]

[2] The regulations at 37 C.F.R. §1.172 provide:

§ 1.172 Applicants, assignees.
(a) A reissue oath must be signed and sworn to or declaration made by the inventor or inventors except as otherwise provided (see §§ 1.42, 1.43, 1.47), and must be accompanied by the written consent of all assignees, if any, owning an undivided interest in the patent, but a reissue oath may be made and sworn to or declaration made by the assignee of the entire interest if the application does not seek to enlarge the scope of the claims of the original patent. All assignees consenting to the reissue must establish their ownership interest in the patent by filing in the reissue application a submission in accordance with the provisions of § 3.73(b) of this chapter.
(b) A reissue will be granted to the original patentee, his legal representatives or assigns as the interest may appear.
[24 FR 10332, Dec. 22, 1959; para. (a), 48 FR 2713, Jan. 20, 1983, effective Feb. 27, 1983; para. (a) revised, 62 FR 53131, Oct. 10, 1997, effective Dec. 1, 1997]

- attempted to approximate the showing of diligence as required under 37 C.F.R. §1.47 (though the provisions of 37 C.F.R. §1.47, *per se*, are not applicable in this manner), and

- sought remedy by a waiver under 37 C.F.R. §1.183[3] of the requirements for all (both) inventors to sign the declaration under 37 C.F.R. §1.67 and §1.172 .

Petitioner represents that he has made a diligent effort to contact Mr. Dennison and have him join in the declaration under 37 C.F.R. §1.67 and §1.172, but that Mr. Dennison has failed to do so and that this failure creates an "extraordinary situation" as foreseen under 37 C.F.R. §1.183 requiring the invocation of the interests of justice.

To the extent that such waiver under 37 C.F.R. §1.183 is required so that the Examiner may now consider the declaration under 37 C.F.R. §1.67 and §1.172 as submitted, the petition is **granted** to permit such consideration; and further, the instant waiver is valid for the instant declaration and for any successive declaration that may have to be filed in the instant reissue application.

This file is released to Technology Center 2800 for further processing in due course.

Telephone inquiries concerning this decision may be directed to the undersigned at (571) 272-3214.

John J. Gillon, Jr.
Senior Attorney
Office of Petitions

---

[3] The regulations at 37 C.F.R. §1.183 provide, in pertinent part:
§1.183 Suspension of the Rules.
In an extraordinary situation, when justice requires, any requirement of the regulations in this part which is not a requirement of the statutes may be suspended or waived by the Commissioner or the Commissioner's designee, *sua sponte*, or on petition of the interested party, subject to such other requirements as may be imposed. * * *

UNITED STATES PATENT AND TRADEMARK OFFICE

COMMISSIONER FOR PATENTS
UNITED STATES PATENT AND TRADEMARK OFFICE
P.O. BOX 1450
ALEXANDRIA, VA 22313-1450
www.uspto.gov

Paper No. ____

STEVEN I. WEISBURD
DICKSTEIN SHAPIRO MORIN & OSHINSKY LLP
1177 AVENUE OF THE AMERICAS, 41ST FLOOR
NEW YORK, NY 10036-2714

COPY MAILED
MAR 3 0 2004
OFFICE OF PETITIONS

In re Application of Masafumi Nakamura Application No. 10/020,743 Filed: December 12, 2001 Attorney Docket No. P/1909-158	DECISION GRANTING PETITION UNDER 37 CFR 313(c)(2)

This is a decision on the petition, filed March 24, 2004, under 37 CFR 1.313(c)(2) to withdraw the above-identified application from issue after payment of the issue fee.

The petition is **GRANTED**.

The above-identified application is withdrawn from issue for consideration of a submission under 37 CFR 1.114 (request for continued examination). See 37 CFR 1.313(c)(2).

Petitioner is advised that the issue fee paid on November 12, 2003 in the above-identified application cannot be refunded. If, however, the above-identified application is again allowed, petitioner may request that it be applied towards the issue fee required by the new Notice of Allowance.[1]

Telephone inquiries should be directed to the undersigned at (703) 305-8680.

Upon receipt of the file in the Office of Petitions, the file will be forwarded to Technology Center AU 2821 for processing of the request for continued examination under 37 CFR 1.114 and for consideration of the concurrently filed Information Disclosure Statement.

Frances Hicks
Petitions Examiner
Office of Petitions
Office of the Deputy Commissioner
for Patent Examination Policy

---

[1] The request to apply the issue fee to the new Notice may be satisfied by completing and returning the new Issue Fee Transmittal Form PTOL-85(b), which includes the following language thereon: "Commissioner for Patents is requested to apply the Issue Fee and Publication Fee (if any) or re-apply any previously paid issue fee to the application identified above." Petitioner is advised that, whether a fee is indicated as being due or not, the Issue Fee Transmittal Form **must** be completed and timely submitted to avoid abandonment. Note the language in bold text on the first page of the Notice of Allowance and Fee(s) Due (PTOL-85).

UNITED STATES PATENT AND TRADEMARK OFFICE

COMMISSIONER FOR PATENTS
UNITED STATES PATENT AND TRADEMARK OFFICE
P.O. BOX 1450
ALEXANDRIA, VA 22313-1450
www.uspto.gov

Paper No. 10

Rhonda L. Sheldon
Trop, Purner & Hu, P.C.
8554 Katy Freeway, Suite 100
Houston, Texas 77024

DEC 10 2003

In re Application of Tyler A. Lowrey	:
Application no. 10/020,757	: DECISION ON PETITION
Filed: 30 October 2001	:
Attorney Docket No. ITO.0513US (P13341)	:

This is a decision on the petition filed under 37 C.F.R. §1.181 on July 8, 2003, to invoke the supervisory authority of the Director of the USPTO to review the action of the examiner in the above-identified application. The petition is before the Director of Technology Center 2800 for review.

The petition is **GRANTED** to the extent indicated below.

It is the petitioner's position that independent claims thirty-seven and forty-four are not directed toward independent species in contrast to claim one as indicated in the Final Rejection mailed 21 April 2003. We agree with the petitioner's position.

The application will be remanded back to the examiner. The restriction requirement issued upon claims thirty-seven, forty-four and their dependant claims will be removed and the claims will be examined by the Office.

Sharon A. Gibson, Director
Technology Center 2800 – Semiconductors, Electrical and
Optical Systems and Components

UNITED STATES PATENT AND TRADEMARK OFFICE

Commissioner for Patents
United States Patent and Trademark Office
P.O. Box 1450
Alexandria, VA 22313-1450
www.uspto.gov

KATHERINE KOWALCHYK
PO BOX 2903
MINNEAPOLIS MN 55402-0903

COPY MAILED
MAR 3 1 2006
OFFICE OF PETITIONS

In re	:
Simmons, et al.	: DECISION REGARDING
Application No. 10/020,786	: PATENT TERM ADJUSTMENT
Filed: December 13, 2001	:
Patent No. 6,979,556	:
Issued: December 27, 2005	:

This letter is in response to the "REQUEST FOR PATENT TERM ADJUSTMENT UNDER 37 C.F.R. §1.705(d)", filed January 26, 2006. Patentees request that the determination of patent term adjustment under 35 U.S.C. 154(b) be corrected from one hundred fifty-seven (157) days to two hundred twenty-one (221) days.

The application for patent term adjustment is **DISMISSED**.

On December 27, 2005, the above-identified application matured into U.S. Patent No. 6,979,556. The patent issued with a Patent Term Adjustment of one hundred fifty-seven (157) days.

Patentees state that the patent issuing is not subject to a terminal disclaimer.

The Office determined a patent term adjustment of one hundred fifty-seven (157) days based on an adjustment for PTO delay of nineteen (19) days pursuant to 35 U.S.C. 154(b)(1)(A)(i) and 37 C.F.R. § 1.703(a)(1), one hundred seventy-eight (178) days pursuant to 35 U.S.C. 154(b)(1)(A)(iv) and 37 C.F.R. §1.703(a)(6) and one hundred eight-two (182) days pursuant to 35 U.S.C. 154(b)(1)(B)(iii) and 37 C.F.R. § 1.703(b), reduced by Applicants' delays of fifty-eight (58) and thirty-three (33) days pursuant to 35 U.S.C. 154(b)(2)(C)(ii) and 37 C.F.R. § 1.704(b), and sixty seven (67) days and sixty-four (64) days pursuant to 35 U.S.C. 154(b)(2)(C)(iii) and 37 C.F.R. § 1.704(c)(8). The adjustment of sixty-three (64) days is at issue.

A review of the application file reveals that applicants filed a Supplemental Information Disclosure Statement (IDS) on April 23, 2004, after they had previously filed a response on February 19, 2004. The IDS did not contain a proper 37 C.F.R. § 1.704(d) statement. The IDS contained a statement that "at least **some** of the references were recently cited in an International Search Report mailed March 24, 2004." § 1.704(d) states that an IDS will not be considered a failure to engage under (c)(8) if it is accompanied by a statement that "**each** item of information contained in the information disclosure statement was **first cited** in any communication from a foreign patent office in a counterpart application and that this communication was not received" more than thirty days prior to the filing of the IDS.

With the filing of the petition, patentees assert that each item was newly cited in this foreign communication. Patentees should have mirrored the language of "first cited" as required by § 1.704(d). Accordingly, applicant delay of sixty-three (64) days was properly assessed pursuant to 37 C.F.R. § 1.704(c)(8). In view thereof, the correct determination of patent term adjustment is **one hundred fifty-seven (157) days**.

If applicants want to make an assertion that "each item" was "first cited", then patentees may file a Request for Reconsideration of this patent term adjustment decision, with a statement mirroring the language of §1.704(d). Patentees are given **thirty (30) days** to respond to this decision. No extensions of time will be granted under 37 C.F.R. § 1.136(a).

Receipt of the fee under 37 C.F.R. § 1.18(e) is acknowledged.

Telephone inquiries specific to this matter should be directed to Cliff Congo, Petitions Attorney, at (571)272-3207.

Nancy Johnson
Senior Attorney
Office of Petitions

UNITED STATES PATENT AND TRADEMARK OFFICE

Commissioner for Patents
United States Patent and Trademark Office
P.O. Box 1450
Alexandria, VA 22313-1450
www.uspto.gov

COPY MAILED
AUG 0 4 2006
OFFICE OF PETITIONS

KATHERINE KOWALCHYK
PO BOX 2903
MINNEAPOLIS MN 55402-0903

In re	:
Simmons, et al.	: DECISION REGARDING
Application No. 10/020,786	: PATENT TERM ADJUSTMENT
Filed: December 13, 2001	:
Patent No. 6,979,556	:
Issued: December 27, 2005	:

This letter is in response to the "REQUEST FOR RECONSIDERATION OF DECISION REGARDING PATENT TERM ADJUSTMENT MAILED MARCH 31, 2006 AND REQUEST FOR PATENT TERM ADJUSTMENT UNDER 37 C.F.R. §1.705(d)", filed April 19, 2006. Patentees request that the determination of patent term adjustment under 35 U.S.C. 154(b) be corrected from one hundred fifty-seven (157) days to two hundred twenty-one (221) days.

The application for patent term adjustment is **DISMISSED**.

On December 27, 2005, the above-identified application matured into U.S. Patent No. 6,979,556. The patent issued with a Patent Term Adjustment of one hundred fifty-seven (157) days.

Patentees state that the patent issuing is not subject to a terminal disclaimer.

The Office determined a patent term adjustment of one hundred fifty-seven (157) days based on an adjustment for PTO delay of nineteen (19) days pursuant to 35 U.S.C. 154(b)(1)(A)(i) and 37 C.F.R. § 1.703(a)(1), one hundred seventy-eight (178) days pursuant to 35

U.S.C. 154(b)(1)(A)(iv) and 37 C.F.R. §1.703(a)(6) and one hundred eight-two (182) days pursuant to 35 U.S.C. 154(b)(1)(B)(iii) and 37 C.F.R. § 1.703(b), reduced by Applicants' delays of fifty-eight (58) and thirty-three (33) days pursuant to 35 U.S.C. 154(b)(2)(C)(ii) and 37 C.F.R. § 1.704(b), and sixty seven (67) days and sixty-four (64) days pursuant to 35 U.S.C. 154(b)(2)(C)(iii) and 37 C.F.R. § 1.704(c)(8). The adjustment of sixty-three (64) days is at issue.

Patentees filed an application for patent term adjustment on January 26, 2006. However, the request was dismissed in a decision mailed on March 31, 2006.

With the request for reconsideration, patentees have certified under 37 C.F.R. §1.704(d) that "each item of information contained on the IDS of April 23, 2004 was first cited in **a** communication from a foreign patent office in a counterpart application and that this communication was not received by an individual designated in § 1.56(c) more than 30 days prior to filing the IDS" (emphasis added).

Patentees have still not made a proper 1.704(d) statement, because applicants stated that the "IDS was first cited in **a** communication from a foreign patent office", whereas 1.704(d) requires a statement that the "IDS was first cited in **any** communication".

Accordingly, applicant delay of sixty-three (64) days was properly assessed pursuant to 37 C.F.R. § 1.704(c)(8).
In view thereof, the correct determination of patent term adjustment is **one hundred fifty-seven (157) days**.

If patentees want to make a proper assertion under §1.704(d), then patentees may file a Request for Reconsideration of this patent term adjustment decision, with a statement mirroring the language of §1.704(d). Patentees are given **thirty (30) days** to respond to this decision. No extensions of time will be granted under 37 C.F.R. § 1.136(a).

No fee is required for a request for reconsideration. Accordingly, the $200 fee submitted is being refunded to petitioner under separate cover.

Telephone inquiries specific to this matter should be directed to Cliff Congo, Petitions Attorney, at (571)272-3207.

Kery Fries
Senior Legal Advisor
Office of Patent Legal Administration
Office of Deputy Commissioner
for Patent Examination Policy

UNITED STATES PATENT AND TRADEMARK OFFICE

Commissioner for Patents
United States Patent and Trademark Office
P.O. Box 1450
Alexandria, VA 22313-1450
www.uspto.gov

KATHERINE KOWALCHYK
PO BOX 2903
MINNEAPOLIS MN 55402-0903

COPY MAILED
DEC 11 2006
OFFICE OF PETITIONS

In re	:
Simmons, et al.	: DECISION REGARDING
Application No. 10/020,786	: PATENT TERM ADJUSTMENT
Filed: December 13, 2001	: AND NOTICE OF INTENT
Patent No. 6,979,556	: TO ISSUE
Issued: December 27, 2005	: CERTIFICATE OF CORRECTION

This letter is in response to the "REQUEST FOR RECONSIDERATION OF DECISION REGARDING PATENT TERM ADJUSTMENT MAILED AUGUST 4, 2006 AND REQUEST FOR PATENT TERM ADJUSTMENT UNDER 37 C.F.R. §1.705(d)", filed August 30, 2006. Patentees request that the determination of patent term adjustment under 35 U.S.C. 154(b) be corrected from one hundred fifty-seven (157) days to two hundred twenty-one (221) days.

The application for patent term adjustment is **GRANTED**.

On December 27, 2005, the above-identified application matured into U.S. Patent No. 6,979,556. The patent issued with a Patent Term Adjustment of one hundred fifty-seven (157) days.

Patentees state that the patent issuing is not subject to a terminal disclaimer.

The Office determined a patent term adjustment of one hundred fifty-seven (157) days based on an adjustment for PTO delay of nineteen (19) days pursuant to 35 U.S.C. 154(b)(1)(A)(i) and 37 C.F.R. § 1.703(a)(1), one hundred seventy-eight (178) days pursuant to 35 U.S.C. 154(b)(1)(A)(iv) and 37 C.F.R. §1.703(a)(6) and one hundred eight-two (182) days pursuant to 35 U.S.C. 154(b)(1)(B)(iii) and 37 C.F.R. § 1.703(b), reduced by Applicants' delays of fifty-eight (58) and thirty-three (33) days pursuant to 35 U.S.C. 154(b)(2)(C)(ii) and 37 C.F.R. § 1.704(b), and sixty seven (67) days and sixty-four (64) days pursuant to 35 U.S.C. 154(b)(2)(C)(iii) and 37 C.F.R. § 1.704(c)(8). The adjustment of sixty-three (64) days is at issue.

Patentees filed an application for patent term adjustment on January 26, 2006. However, the request was dismissed in a decision mailed on March 31, 2006 because patentees did not provided a proper 37 C.F.R. 1.704(d) statement. Patentees filed a request for reconsideration on April 19, 2006. However, the petition was again dismissed in a decision mailed on August 7, 2006.

With the instant request for reconsideration, patentees have certified under 37 C.F.R. §1.704(d) that "each item of information contained on the IDS of April 23, 2004 was first cited in any communication from a foreign patent office in a counterpart application and that this communication was not received by any individual designated in § 1.56(c) more than 30 days prior to filing the IDS".

Accordingly, the petition is granted.

In view thereof, the correct determination of PTA at the time of issuance is two hundred twenty-one (221) days (379 days of PTO delay and 158 days of applicant delay).

The application file is being forwarded to the Certificates of Correction Branch for issuance of a certificate of correction in order to rectify the error regarding the patent term information. See 35 U.S.C. § 254 and 37 C.F.R. § 1.322. The certificate of correction will indicate that the term of the above-identified patent is extended or adjusted by **two hundred twenty-one (221)** days subject to any disclaimers.

Telephone inquiries specific to this matter should be directed to Cliff Congo, Petitions Attorney, at (571)272-3207.

Kery A. Fries

Kery Fries
Senior Legal Advisor
Office of Patent Legal Administration
Office of Deputy Commissioner
for Patent Examination Policy

UNITED STATES PATENT AND TRADEMARK OFFICE

DRAFT CERTIFICATE OF CORRECTION

PATENT : 6,979,556 B2

DATED : December 27, 2005

INVENTOR(S) : Simmons, et al.

It is certified that error appears in the above-identified patent and that said Letters Patent is hereby corrected as shown below:

On the cover page,

[*] Notice: Subject to any disclaimer, the term of this patent is extended or adjusted under 35 USC 154(b) by (157) days

Delete the phrase "by 157 days" and insert – by 221 days—

Day : Friday
Date: 12/8/2006

PALM INTRANET

Time: 11:19:16

PTA Calculations for Application: 10/020786			
Application Filing Date:	12/13/2001	PTO Delay (PTO):	379
Issue Date of Patent:	12/27/2005	Three Years:	0
Pre-Issue Petitions:	0	Applicant Delay (APPL):	222
Post-Issue Petitions:	0	Total PTA (days):	221
PTO Delay Adjustment:	64		

File Contents History

Number	Date	Contents Description	PTO	APPL	START
71	12/08/2006	ADJUSTMENT OF PTA CALCULATION BY PTO	64		
62.5	12/07/2005	PTA 36 MONTHS	182		
62	12/27/2005	PATENT ISSUE DATE USED IN PTA CALCULATION	178		58
61	11/29/2005	RECEIPT INTO PUBS			
60	11/29/2005	DISPATCH TO FDC			
59	11/29/2005	APPLICATION IS CONSIDERED READY FOR ISSUE			
58	03/02/2005	ISSUE FEE PAYMENT VERIFIED			
57	11/22/2005	RECEIPT INTO PUBS			
56	06/10/2005	WORKFLOW - FILE SENT TO CONTRACTOR			
55	03/02/2005	ISSUE FEE PAYMENT RECEIVED			
54	12/13/2004	EXPORT TO INITIAL DATA CAPTURE			
53	12/06/2004	MAIL NOTICE OF ALLOWANCE			
52	12/02/2004	ISSUE REVISION COMPLETED			
51	12/03/2004	NOTICE OF ALLOWANCE DATA VERIFICATION COMPLETED			
50	11/29/2004	NOTICE OF ALLOWABILITY			
49	09/23/2004	PETITION FEE PAID			
48	09/23/2004	DATE FORWARDED TO EXAMINER			
47	09/20/2004	RESPONSE AFTER NON-FINAL ACTION		33	40
46	09/20/2004	REQUEST FOR EXTENSION OF TIME - GRANTED			
45	09/20/2004	WORKFLOW INCOMING AMENDMENT IFW			
44	09/20/2004	WORKFLOW INCOMING PETITION IFW			
43	04/23/2004	INFORMATION DISCLOSURE STATEMENT (IDS) FILED		64	35

42	03/26/2002	OATH OR DECLARATION FILED (INCLUDING SUPPLEMENTAL)			
41	04/19/2004	INFORMATION DISCLOSURE STATEMENT (IDS) FILED			
40	05/18/2004	MAIL NON-FINAL REJECTION			
39	05/17/2004	NON-FINAL REJECTION			
38	03/16/2004	CORRESPONDENCE ADDRESS CHANGE			
37	03/17/2004	CHANGE IN POWER OF ATTORNEY (MAY INCLUDE ASSOCIATE POA)			
36	03/03/2004	DATE FORWARDED TO EXAMINER			
35	02/19/2004	RESPONSE TO A LETTER TO COMPLY WITH THE SEQUENCE RULES			
34	02/18/2004	REFERENCE CAPTURE ON IDS			
33	01/20/2004	INFORMATION DISCLOSURE STATEMENT (IDS) FILED		67	26
32	01/29/2004	MAIL LETTER REQUIRING CRF (UNREADABLE, NON-COMPLIANT, NOT SUBMITTED)			
31	01/26/2004	CRF DISKETTE UNREADABLE / DID NOT COMPLY / REQUIRED BUT NOT SUBMITTED			
30	12/29/2003	REFERENCE CAPTURE ON IDS			
29	11/17/2003	INFORMATION DISCLOSURE STATEMENT (IDS) FILED			
28	11/19/2003	IFW AMENDED CASE PROCESSING COMPLETE			
27	11/19/2003	DATE FORWARDED TO EXAMINER			
26	11/14/2003	RESPONSE AFTER NON-FINAL ACTION		58	22
25	11/14/2003	REQUEST FOR EXTENSION OF TIME - GRANTED			
24	09/25/2003	INFORMATION DISCLOSURE STATEMENT (IDS) FILED			
23	06/26/2003	INFORMATION DISCLOSURE STATEMENT (IDS) FILED			
22	06/17/2003	MAIL NON-FINAL REJECTION			
21	06/16/2003	NON-FINAL REJECTION			
20	04/17/2003	CASE DOCKETED TO EXAMINER IN GAU			
19	04/07/2003	DATE FORWARDED TO EXAMINER			
18	04/03/2003	RESPONSE TO ELECTION / RESTRICTION FILED			
17	03/04/2003	MAIL RESTRICTION REQUIREMENT	19		-1
16	03/04/2003	REQUIREMENT FOR RESTRICTION / ELECTION			
15	07/30/2002	INFORMATION DISCLOSURE STATEMENT (IDS) FILED			

14	03/26/2002	PRELIMINARY AMENDMENT			
13	05/08/2002	CASE DOCKETED TO EXAMINER IN GAU			
12	05/02/2002	APPLICATION DISPATCHED FROM OIPE			
11	04/22/2002	APPLICATION IS NOW COMPLETE			
10	03/26/2002	ADDITIONAL APPLICATION FILING FEES			
9	03/26/2002	A SET OF SYMBOLS AND PROCEDURES, PROVIDED TO THE PTO ON A SET OF 3 ? INCH DISKETTES IN COMPUTER READ			
8	03/26/2002	A SET OF SYMBOLS AND PROCEDURES, PROVIDED TO THE PTO ON A SET OF COMPUTER LISTINGS, THAT DESCRIBE IN			
7	03/26/2002	A STATEMENT BY ONE OR MORE INVENTORS SATISFYING THE REQUIREMENT UNDER 35 USC 115, OATH OF THE APPLIC			
6	03/26/2002	APPLICANT HAS SUBMITTED NEW DRAWINGS TO CORRECT CORRECTED PAPERS PROBLEMS			
5	04/17/2002	CRF IS GOOD TECHNICALLY / ENTERED INTO DATABASE			
4	01/28/2002	NOTICE MAILED--APPLICATION INCOMPLETE--FILING DATE ASSIGNED			
3	01/15/2002	IFW SCAN & PACR AUTO SECURITY REVIEW			
2	12/28/2001	IFW SCAN & PACR AUTO SECURITY REVIEW			
1	12/13/2001	INITIAL EXAM TEAM NN			

Search Another: Application# [ ] Search

EXPLANATION OF PTA CALCULATION

EXPLANATION OF PTE CALCULATION

To go back use Back button on your browser toolbar.

Back to PALM | ASSIGNMENT | OASIS | Home page

UNITED STATES PATENT AND TRADEMARK OFFICE

COMMISSIONER FOR PATENTS
UNITED STATES PATENT AND TRADEMARK OFFICE
WASHINGTON, D.C. 20231
www.uspto.gov

Paper No. 4

JOHN P. DONOHUE JR.
WOODCOCK WASHBURN LLP
ONE LIBERTY PLACE - 46TH FLOOR
PHILADELPHIA, PA 19103

COPY MAILED

APR 18 2002

OFFICE OF PETITIONS

In re Application of	:	
Randal W. Glass	:	
Application No. 10/020,791	:	NOTICE
Filed: October 30, 2001	:	
Attorney Docket No. IRID-0479	:	

This is a notice regarding your request for acceptance of a fee deficiency submission under 37 CFR 1.28. On September 1, 1998, the Court of Appeals for the Federal Circuit held that 37 CFR 1.28(c) is the sole provision governing the time for correction of the erroneous payment of the issue fee as a small entity. **See DH Technology v. Synergystex International, Inc. 154 F.3d 1333, 47 USPQ2d 1865 (Fed. Cir. Sept. 1, 1998).**

The Office no longer investigates or rejects original or reissue applications under 37 CFR 1.56. **1098 Off. Gaz. Pat. Office 502 (January 3, 1989)**. Therefore, nothing in this Notice is intended to imply that an investigation was done.

Your fee deficiency submission under 37 CFR 1.28 is hereby **ACCEPTED**.

Inquiries related to this communication should be directed to the Office of Petitions Staff at (703) 305-9285.

This file is being forwarded to Technology Center 2100.

Irvin Dingle
Petitions Examiner
Office of Petitions
Office of the Deputy Commissioner
for Patent Examination Policy

UNITED STATES PATENT AND TRADEMARK OFFICE

Commissioner for Patents
United States Patent and Trademark Office
P.O. Box 1450
Alexandria, VA 22313-1450
www.uspto.gov

THE PROCTER & GAMBLE COMPANY
INTELLECTUAL PROPERTY DIVISION
WINTON HILL TECHNICAL CENTER - BOX 161
6110 CENTER HILL AVENUE
CINCINNATI OH 45224

COPY MAILED
APR 2 0 2006
OFFICE OF PETITIONS

In re Application of	:	
Lant, et al.	:	
Application No. 10/020,794	:	ON PETITION
Filed: October 30, 2001	:	
Attorney Docket No. CM2438MX	:	
For: DETERGENT COMPOSITIONS		

This is a decision on the petition under 37 CFR 1.137(b), filed on July 20, 2005, to revive the above-identified application.

The petition is **DISMISSED**.

Any request for reconsideration of this decision must be submitted within TWO (2) MONTHS from the mail date of this decision. Extensions of time under 37 CFR 1.136(a) are permitted. The reconsideration request should include a cover letter entitled "Renewed Petition under 37 CFR 1.137(b)." This is **not** final agency action within the meaning of 5 U.S.C. § 704.

The application became abandoned for failure to reply within the meaning of 37 CFR 1.113 in a timely manner to the final Office action mailed November 16, 2004, which set a shortened statutory period for reply of three (3) months. No reply was timely filed, and no extensions of time under the provisions of 37 CFR 1.136(a) were obtained. Accordingly, the application became abandoned on February 17, 2005.

A grantable petition under 37 CFR 1.137(b) must be accompanied by: (1) the required reply, unless previously filed; (2) the petition fee as set forth in 37 CFR 1.17(m); (3) a statement that the entire delay in filing the required reply from the due date for the reply until the filing of a grantable petition pursuant to 37 CFR 1.137(b) was unintentional; and (4) any terminal disclaimer (and fee as set forth in 37 CFR 1.20(d)) required by 37 CFR 1.137(c).

Where there is a question as to whether either the abandonment or the delay in filing a petition under 37 CFR 1.137 was unintentional, the Commissioner may require additional information. See MPEP 711.03(c)(III)(C) and (D). The instant petition lack(s) item (1).

With respect to item (1) above, the reply required for consideration of a petition to revive after a final Office action must be one of the following: a Notice of Appeal (and appeal fee required by 37 CFR 1.17(b)); an amendment that *prima facie* places the application in condition for allowance; a RCE and required fee; a submission under 37 CFR 1.129(a), if the above-identified application is eligible for such transitional practice; or the filing of a continuing application.

The amendment filed on July 20, 2005 failed to *prima facie* place the application in condition for allowance, as explained in the enclosed Advisory Action Before the Filing of an Appeal Brief. Therefore, petitioners have not filed a proper reply.

Petitioners must submit a proper reply with any reconsideration petition.

Pursuant to petitioners' authorization, deposit account no. 16-2480 will be charged the required $1,500.00 petition fee.

Further correspondence with respect to this matter should be addressed as follows:

By mail:
Mail Stop PETITION
Commissioner for Patents
Post Office Box 1450
Alexandria, VA 22313-1450

By hand:
U.S. Patent and Trademark Office
Customer Service Window, Mail Stop Petition
Randolph Building
401 Dulany Street
Alexandria, VA 22314

By FAX: (571) 273-8300 - ATTN: Office of Petitions

Telephone inquiries should be directed to the undersigned at (571) 272-3230.

E. Shirene Willis
Senior Petitions Attorney
Office of Petitions

Enclosure: Advisory Action Before the Filing of an Appeal Brief

Advisory Action Before the Filing of an Appeal Brief	Application No.	Applicant(s)	
	10/020,794	LANT ET AL.	
	Examiner	Art Unit	
	Necholus Ogden	1751	

--The MAILING DATE of this communication appears on the cover sheet with the correspondence address --

THE REPLY FILED 20 July 2005 FAILS TO PLACE THIS APPLICATION IN CONDITION FOR ALLOWANCE.

1. ☐ The reply was filed after a final rejection, but prior to or on the same day as filing a Notice of Appeal. To avoid abandonment of this application, applicant must timely file one of the following replies: (1) an amendment, affidavit, or other evidence, which places the application in condition for allowance; (2) a Notice of Appeal (with appeal fee) in compliance with 37 CFR 41.31; or (3) a Request for Continued Examination (RCE) in compliance with 37 CFR 1.114. The reply must be filed within one of the following time periods:
   a) ☒ The period for reply expires 3 months from the mailing date of the final rejection.
   b) ☐ The period for reply expires on: (1) the mailing date of this Advisory Action, or (2) the date set forth in the final rejection, whichever is later. In no event, however, will the statutory period for reply expire later than SIX MONTHS from the mailing date of the final rejection.

   Examiner Note: If box 1 is checked, check either box (a) or (b). ONLY CHECK BOX (b) WHEN THE FIRST REPLY WAS FILED WITHIN TWO MONTHS OF THE FINAL REJECTION. See MPEP 706.07(f).

Extensions of time may be obtained under 37 CFR 1.136(a). The date on which the petition under 37 CFR 1.136(a) and the appropriate extension fee have been filed is the date for purposes of determining the period of extension and the corresponding amount of the fee. The appropriate extension fee under 37 CFR 1.17(a) is calculated from: (1) the expiration date of the shortened statutory period for reply originally set in the final Office action; or (2) as set forth in (b) above, if checked. Any reply received by the Office later than three months after the mailing date of the final rejection, even if timely filed, may reduce any earned patent term adjustment. See 37 CFR 1.704(b).

NOTICE OF APPEAL

2. ☐ The Notice of Appeal was filed on _____. A brief in compliance with 37 CFR 41.37 must be filed within two months of the date of filing the Notice of Appeal (37 CFR 41.37(a)), or any extension thereof (37 CFR 41.37(e)), to avoid dismissal of the appeal. Since a Notice of Appeal has been filed, any reply must be filed within the time period set forth in 37 CFR 41.37(a).

AMENDMENTS

3. ☒ The proposed amendment(s) filed after a final rejection, but prior to the date of filing a brief, will not be entered because
   (a) ☒ They raise new issues that would require further consideration and/or search (see NOTE below);
   (b) ☐ They raise the issue of new matter (see NOTE below);
   (c) ☐ They are not deemed to place the application in better form for appeal by materially reducing or simplifying the issues for appeal; and/or
   (d) ☐ They present additional claims without canceling a corresponding number of finally rejected claims.
   NOTE: *See Continuation Sheet*. (See 37 CFR 1.116 and 41.33(a)).
4. ☐ The amendments are not in compliance with 37 CFR 1.121. See attached Notice of Non-Compliant Amendment (PTOL-324).
5. ☐ Applicant's reply has overcome the following rejection(s): _____.
6. ☐ Newly proposed or amended claim(s) _____ would be allowable if submitted in a separate, timely filed amendment canceling the non-allowable claim(s).
7. ☒ For purposes of appeal, the proposed amendment(s): a) ☒ will not be entered, or b) ☐ will be entered and an explanation of how the new or amended claims would be rejected is provided below or appended.
   The status of the claim(s) is (or will be) as follows:
   Claim(s) allowed: _____.
   Claim(s) objected to: _____.
   Claim(s) rejected: *1-10*.
   Claim(s) withdrawn from consideration: _____.

AFFIDAVIT OR OTHER EVIDENCE

8. ☐ The affidavit or other evidence filed after a final action, but before or on the date of filing a Notice of Appeal will not be entered because applicant failed to provide a showing of good and sufficient reasons why the affidavit or other evidence is necessary and was not earlier presented. See 37 CFR 1.116(e).
9. ☐ The affidavit or other evidence filed after the date of filing a Notice of Appeal, but prior to the date of filing a brief, will not be entered because the affidavit or other evidence failed to overcome all rejections under appeal and/or appellant fails to provide a showing a good and sufficient reasons why it is necessary and was not earlier presented. See 37 CFR 41.33(d)(1).
10. ☐ The affidavit or other evidence is entered. An explanation of the status of the claims after entry is below or attached.

REQUEST FOR RECONSIDERATION/OTHER

11. ☐ The request for reconsideration has been considered but does NOT place the application in condition for allowance because: _____.
12. ☐ Note the attached Information Disclosure Statement(s). (PTO/SB/08 or PTO-1449) Paper No(s). _____
13. ☒ Other: The claims remain rejected for reasons of record disclosed in the final office action.

Necholus Ogden
Primary Examiner
Art Unit: 1751

Continuation of 3. NOTE: The proposed amendments were not earlier presented and therefore would require a further search and/ consideration..

UNITED STATES PATENT AND TRADEMARK OFFICE

COMMISSIONER FOR PATENTS
UNITED STATES PATENT AND TRADEMARK OFFICE
P.O. BOX 1450
ALEXANDRIA, VA 22313-1450
www.uspto.gov

THE PROCTER & GAMBLE COMPANY
INTELLECTUAL PROPERTY DIVISION
WINTON HILL TECHNICAL CENTER - BOX 161
6110 CENTER HILL AVENUE
CINCINNATI OH 45224

COPY MAILED
JUL 14 2006
OFFICE OF PETITIONS

In re Application of :
Lant, et al. :
Application No. 10/020,794 : ON PETITION
Filed: October 30, 2001 :
Attorney Docket No. CM2438MX :
For: DETERGENT COMPOSITIONS

This is a decision on the reconsideration petition under 37 CFR 1.137(b), filed on June 16, 2006, to revive the above-identified application.

The application became abandoned for failure to reply within the meaning of 37 CFR 1.113 in a timely manner to the final Office action mailed November 16, 2004, which set a shortened statutory period for reply of three (3) months. No reply was timely filed and no extensions of time under the provisions of 37 CFR 1.136(a) were obtained. Accordingly, the application became abandoned on February 17, 2005.

Applicants have submitted a proper reply in the form of a RCE and amendment,[1] an acceptable statement of the unintentional nature of the delay in responding to the November 16, 2004 final Office action, and the petition fee.

The petition under 37 CFR 1.137(b) is **granted**.

After the mailing of this decision, the application will be returned to Technology Center AU 1751 for consideration of the RCE and amendment filed on June 16, 2006.

[1] Pursuant to petitioners' authorization, deposit account no. 16-2480 will be charged the required $790 RCE fee.

Telephone inquiries should be directed to the undersigned at (571) 272-3230.

Shirene Willis Brantley

Shirene Willis Brantley
Senior Petitions Attorney
Office of Petitions

UNITED STATES PATENT AND TRADEMARK OFFICE

Commissioner for Patents
United States Patent and Trademark Office
P.O. Box 1450
Alexandria, VA 22313-1450
www.uspto.gov

Patricia A. Coburn
Battelle Pulmonary Therapeutics, Inc.
Suite 100
1801 Watermark Drive
Columbus OH 43215

MAILED

JAN 22 2010

OFFICE OF PETITIONS

In re Application of	:	
Siu Man Cowan	:	
Application No. 10/020,798	:	ON PETITION
Filed: November 30, 2001	:	
Attorney Docket No. 22112(2)	:	

This is a notice regarding your request for acceptance of a fee deficiency submission under 37 CFR 1.28. On September 1, 1998, the Court of Appeals for the Federal Circuit held that 37 CFR 1.28(c) is the sole provision governing the time for correction of the erroneous payment of the issue fee as a small entity. **See DH Technology v. Synergystex International, Inc. 154 F.3d 1333, 47 USPQ2d 1865 (Fed. Cir. Sept. 1, 1998).**

The Office no longer investigates or rejects original or reissue applications under 37 CFR 1.56. **1098 Off. Gaz. Pat. Office 502 (January 3, 1989)**. Therefore, nothing in this Notice is intended to imply that an investigation was done.

Your fee deficiency submission under 37 CFR 1.28 is hereby **ACCEPTED**.

All future fees paid in this application must be paid at the large entity rate.

The address given on the petition differs from the address of record. A courtesy copy of this decision is being mailed to the address given on the petition; however, the Office will mail all future correspondence solely to the address of record.

Telephone inquiries concerning this decision should be directed to the undersigned at (571) 272-7751.

Joan Olszewski
Petitions Examiner
Office of Petitions

cc: C. MICHAEL GEGENHEIMER
BATTELLE MEMORIAL INSTITUTE
505 KING AVENUE
COLUMBUS, OH 43201-2693

UNITED STATES PATENT AND TRADEMARK OFFICE

Commissioner for Patents
United States Patent and Trademark Office
P.O. Box 1450
Alexandria, VA 22313-1450
www.uspto.gov

SCOTT P. ZIMMERMAN PLLC
P.O. BOX 3822
CARY, NC 27519

COPY MAILED

JUL 27 2005

OFFICE OF PETITIONS

ON PETITION

In re Application of :
Siu Man L. Cowan, et al. :
Application No. 10/020,799 :
Filed: November 30, 2001 :
Attorney Docket No. 22112 (3) :

This is a decision on the petition under 37 CFR 1.137(b), filed March 14, 2005, to revive the above-identified application.

The petition is **GRANTED.**

The above-identified application became abandoned for failure to reply in a timely manner to the final Office action mailed December 30, 2003, which set a shortened statutory period for reply of three (3) months. No extensions of time under the provisions of 37 CFR 1.136(a) were obtained. An Advisory action was mailed March 31, 2004 indicating that the reply filed on February 20, 2004 failed to place the application in condition for allowance. Accordingly, the application became abandoned on March 31, 2004.

It is not apparent whether the person signing the statement of unintentional delay was in a position to have firsthand or direct knowledge of the facts and circumstances of the delay at issue. Nevertheless, such statement is being treated as having been made as the result of a reasonable inquiry into the facts and circumstances of such delay. See 37 CFR 10.18(b) and Changes to Patent Practice and Procedure; Final Rule Notice, 62 Fed. Reg. 53131, 53178 (October 10, 1997), 1203 Off. Gaz. Pat. Office 63, 103 (October 21, 1997). In the event that such an inquiry has not been made, petitioner must make such an inquiry. If such inquiry results in the discovery that it is not correct that the entire delay in filing the required reply from the due date for the reply until the filing of a grantable petition pursuant to 37 CFR 1.137(b) was unintentional, petitioner must notify the Office.

There is no indication that the person signing the instant petition was ever given a power of attorney or authorization of agent to prosecute the above-identified application. If the person signing the instant petition desires to receive future correspondence regarding this application, the appropriate power of attorney or authorization of agent must be submitted. While a courtesy copy of this decision is being mailed to the person signing the instant petition, all future correspondence will be directed to the address currently of record until such time as appropriate instructions are received to the contrary.

The petition satisfies the requirements of 37 CFR 1.137(b) in that petitioner has supplied (1) the reply in the form of an Amendment and a Request for Continued Examination (RCE); (2) the petition fee of $750; and (3) an adequate statement of unintentional delay.

Telephone inquiries concerning this decision should be directed to the undersigned at (571) 272-3229.

The application matter is being forwarded to Technology Center 1600, Art Unit 1616 for processing the Request for Continued Examination under 37 CFR 1.114 filed with the instant petition.

Retta Williams

Retta Williams
Petitions Examiner
Office of Petitions
Office of the Deputy Commissioner
for Patent Examination Policy

cc: Steven J. Goldstein
Frost Brown Todd LLC
2200 PNC Center
201 E. Fifth St.
Cincinnati, OH 45202

UNITED STATES PATENT AND TRADEMARK OFFICE

COMMISSIONER FOR PATENTS
UNITED STATES PATENT AND TRADEMARK OFFICE
P.O. BOX 1450
ALEXANDRIA, VA 22313-1450
www.uspto.gov

Paper No. 11

FOLEY & LARDNER
P.O. BOX 80278
SAN DIEGO CA 92138-0278

COPY MAILED

JUL 16 2003

OFFICE OF PETITIONS

In re Application of
Nicholas D. Donato, Nicholas J. Donato,
David C. Sample, Margot Perez, John S.
McMurray, and Robert A. Newman
Application No. 10/020,816
Filed: December 12, 2001
Attorney Docket No. 270/138
Title: METHOD OF ISOLATING EXTRACT
FROM THE EUPHORBACIAE OBESA
PLANT AND METHODS FOR USING THE
SAME

DECISION ON PETITION
UNDER 37 C.F.R. §1.137(f)

This is a decision on the petition filed on May 29, 2003, pursuant to 37 C.F.R. §1.137(f), to revive the above-identified application.

A grantable petition pursuant to 37 CFR 1.137(f) must be accompanied by:

(1) Notification of the filing of an application in a foreign country or under a multinational treaty that requires 18 month publication[1];
(2) The petition fee as set forth in 37 C.F.R. § 1.17(m), and;
(3) A statement that the entire delay in filing the notice from the date that the notice was due under 35 U.S.C. §122(b)(2)(B)(iii) until the date the notice was filed was unintentional. The Commissioner may require additional information where there is a question whether the delay was unintentional.

Petitioner states that the instant nonprovisional application is the subject of an application filed in an international application on December 12, 2002. However, the United States Patent and

1 See PTO/SB/36 and paragraph on PTO/SB/64a for further information. Both may be downloaded at http://www.uspto.gov/web/forms/index.html.

Trademark Office was unintentionally not notified of this filing within 45 days subsequent to the filing of the subject application in a foreign country.

On May 29, 2003, a Notice of Rescission of Nonpublication Request was filed with the Office, along with the instant petition.

In view of the above, this application became abandoned pursuant to 35 U.S.C. §1.22(b)(2)(B)(iii) and 37 C.F.R. §1.213(c) for failure to timely notify the Office of the filing of an application under a multilateral international agreement, that requires publication of applications 18 months after filing.

37 C.F.R. §1.137(f) requires a statement that the entire delay in filing the notice from the date that the notice was due under 35 U.S.C. §122(b)(2)(B)(iii) until the date the notice was filed was unintentional. Since the statement contained in the instant petition varies from the language required by 37 C.F.R. §1.137(f), the statement contained in the instant petition is being construed as the statement required by 37 C.F.R. §1.137(f) and petitioner must notify the Office if this is not a correct interpretation of the statement contained in the instant petition.

The petition under 37 C.F.R. §1.137(f) is **GRANTED**.

Petitioner has submitted the notification of an international filing, paid the petition fee (which has been charged to petitioner's Deposit Account, as authorized in the petition), and has made a statement which is being construed as the proper statement of unintentional delay.

The instant petition has been found to be in compliance with 37 C.F.R. §1.137(f). Accordingly, the failure to timely notify the Office of a foreign or international filing within 45 days after the date of filing of such foreign or international application as provided by 35 U.S.C. §122(b)(2)(B)(iii) and 37 C.F.R. §1.213(c) is accepted as having been unintentionally delayed.

After this decision is mailed, the application will be forwarded to Technology Center 1600 for further processing.

The shortened statutory period for reply is being restarted as of the mail date of this decision.

Telephone inquiries concerning *this decision* should be directed to Attorney Paul Shanoski at (703) 305-0011.

Paul Shanoski

Paul Shanoski
Attorney
Office of Petitions
United States Patent and Trademark Office

UNITED STATES PATENT AND TRADEMARK OFFICE

Commissioner for Patents
United States Patent and Trademark Office
P.O. Box 1450
Alexandria, VA 22313-1450
www.uspto.gov

COPY MAILED

MAR 0 2 2004

OFFICE OF PETITIONS

KIRKPATRICK & LOCKHART LLP
535 SMITHFIELD STREET
PITTSBURGH, PA 15222

In re Application of
Mark A. Fanton, et al.
Application No. 10/020,819
Filed: December 12, 2001
Attorney Docket No. 001663

ON PETITION

This is a decision on the petition under 37 CFR 1.313(c)(2), filed March 1, 2004, to withdraw the above-identified application from issue after payment of the issue fee.

The petition is **GRANTED**.

The above-identified application is withdrawn from issue for consideration of a submission under 37 CFR 1.114 (request for continued examination). See 37 CFR 1.313(c)(2).

Petitioner is advised that the issue fee paid on January 21, 2004, in the above-identified application cannot be refunded. If, however, the above-identified application is again allowed, petitioner may request that it be applied towards the issue fee required by the new Notice of Allowance.

Telephone inquiries relating to this decision should be directed to the undersigned at (703) 305-9220.

The application is being forwarded to Technology Center AU 1755 for further processing of the request for continued examination under 37 CFR 1.114.

Sherry D. Brinkley
Petitions Examiner
Office of Petitions
Office of the Deputy Commissioner
for Patent Examination Policy

---

[1]The request to apply the issue fee to the new Notice may be satisfied by completing and returning the new Issue Fee Transmittal Form PTOL-85(b), which includes the following language thereon: "Commissioner for Patents is requested to apply the Issue Fee and Publication Fee (if any) or re-apply any previously paid issue fee to the application identified above." Petitioner is advised that, whether a fee is indicated as being due or not, the Issue Fee Transmittal Form **must** be completed and timely submitted to avoid abandonment. Note the language in bold text on the first page of the Notice of Allowance and Fee(s) Due (PTOL-85).

UNITED STATES PATENT AND TRADEMARK OFFICE

Commissioner for Patents
United States Patent and Trademark Office
Washington, D.C. 20231
www.uspto.gov
DIW 04-02

Paper No. 6

CARLSON, GASKEY & OLDS, P.C.
400 WEST MAPLE ROAD
SUITE 350
BIRMINGHAM MI 48009

COPY MAILED

APR 3 0 2002

OFFICE OF PETITIONS

In re Application of Simon Blair Dobson Application No. 10/020,869 Filed: 18 December, 2001 Atty Dkt No. 60130-1294/00MRA0564	DECISION DISMISSING PETITION

This is a decision on the petition under 37 CFR 1.10(c) filed on 22 January, 2002 (certificate of mailing date 3 January, 2002), requesting that the above-identified application be accorded a filing date of 12 December, 2001, rather than the presently accorded filing date of 18 December, 2001.

The petition is **dismissed**.

Petitioner alleges that the application was deposited in Express Mail service on 12 September, 2001. In support, petitioner has included a copy of a tracking report printed from the USPS Internet Track & Confirm and database which shows that a mailing bearing Express Mail Label No. EL747232810US (the same Express Mail number found on the itemized transmittal sheet accompanying the original application papers located in the official file) was "Enroute" on 12 September, 2001.

Paragraph (c) of 37 CFR 1.10 states that:

> Any person filing correspondence under 37 CFR 1.10 that was received by the Office and delivered by the "Express Mail Post Office to Addressee" service of the USPS, who can show a discrepancy between the filing date accorded by the Office to the correspondence and the date of deposit as shown by the "date-in" on the "Express Mail" mailing label or other USPS notation, may

petition the Commissioner to accord the correspondence a filing date as of the "date-in" on the "Express Mail" mailing label or other official USPS notation, provided that:

(1) The petition is filed promptly after the person becomes aware that the Office has accorded, or will accord, a filing date other than the USPS deposit date;

(2) The number of the "Express Mail" mailing label was placed on the papers or fees that constitute the correspondence prior to the original mailing by "Express Mail;" and

(3) The petition includes a true copy of the "Express Mail" mailing label showing the "date-in," and of any other official notation by the USPS relied upon to show the date of deposit.

The instant petition lacks the showing required by item (3). In regards to item (3), petitioner must provide a true copy of the Express Mail mailing label showing the "date-in" with a renewed petition. If petitioners are unable to provide a true copy of the Express Mail label showing the "date-in", petitioner should submit a detailed explanation of the circumstances thereof.

As petitioner has not provided a true copy of the Express Mail label, the petition is <u>dismissed</u> without prejudice for reconsideration pending submission of a true copy of the Express Mail label.

The application will be retained in the Office of Petitions for TWO (2) MONTHS to await petitioner's response to this decision. If no response is forthcoming within TWO (2) MONTHS, the application will be forwarded to the Office of Initial Patent Examination for further processing with the presently accorded filing date of 18 December, 2001.

Telephone inquiries may be directed to the undersigned at 703-308-6918.

D Wood

Douglas I. Wood
Petitions Attorney
Office of Petitions
Office of the Deputy Commissioner
for Patent Examination Policy

UNITED STATES PATENT AND TRADEMARK OFFICE

Commissioner for Patents
United States Patent and Trademark Office
Washington, D.C. 20231
www.uspto.gov
DIW 05-02

Paper No. 8

CARLSON, GASKEY & OLDS, P.C.
400 WEST MAPLE ROAD
SUITE 350
BIRMINGHAM MI 48009

COPY MAILED

MAY 14 2002

OFFICE OF PETITIONS

In re Application of Simon Blair Dobson Application No. 10/020,869 Filed: 12 December, 2001 Atty Dcket No. 60130-1294/00MRA0564	DECISION GRANTING PETITION

This is a decision on the renewed petition styled under 37 CFR 1.10(c) filed by facsimile on 9 May, 2002, which is treated as a petition under 37 CFR 1.10(d) requesting that the above-identified application be accorded a filing date of 12 December, 2001, rather than the presently accorded filing date of 18 December, 2001.

Petitioner alleges that the application was deposited in Express Mail service on 12 December, 2001. Petitioners state that they did not receive a copy of the Express Mail customer label, but have provided with the petition a tracking report printed from the USPS Internet Track & Confirm and database which shows that a mailing bearing Express Mail Label No. EL747232810US (the same Express Mail number found on the Utility Patent Application Transmittal filed with the original application papers located in the official file) was "Enroute" on 12 December, 2001.

In view of the evidence present in the file, it is concluded that the correct date of deposit in Express Mail service is 12 December, 2001.

In view of the above, the application is entitled to a filing date of 12 December, 2001.

The petition is <u>granted</u>. No petition fee is due and none has been charged.

The application is being returned to Office of Initial Patent Examination for reprocessing with a filing date of 12 December, 2001, not 18 December, 2001, and for issuance of a corrected Filing Receipt.

Telephone inquiries may be directed to the undersigned at 703-308-6918.

D Wood

Douglas I. Wood
Petitions Attorney
Office of Petitions
Office of the Deputy Commissioner
for Patent Examination Policy

UNITED STATES PATENT AND TRADEMARK OFFICE

COMMISSIONER FOR PATENTS
UNITED STATES PATENT AND TRADEMARK OFFICE
WASHINGTON, D.C. 20231
www.uspto.gov

Paper No. 6

COPY MAILED

AUG 1 2 2002

OFFICE OF PETITIONS

ANTONELLI TERRY STOUT AND KRAUS
SUITE 1800
1300 NORTH SEVENTEENTH STREET
ARLINGTON, VA 22209

In re Application of Cooper Application No. 10/020,870 Filed: December 19, 2001 Atty. Dkt. No.: 1076.41017X00 For: DIGITAL CAMERA	DECISION DISMISSING PETITION UNDER 37 CFR 1.47(b)

This is in response to the petition under 37 CFR 1.47(b), filed July 29, 2002.

The petition is **DISMISSED**.

Rule 47 applicant is given TWO MONTHS from the mailing date of this decision to reply, correcting the below-noted deficiencies. Any reply should be entitled "Request for Reconsideration of Petition Under 37 CFR 1.47(b)," and should only address the deficiencies noted below, except that the reply may include an oath or declaration executed by the non-signing inventor. Failure to respond will result in abandonment of the application. Any extensions of time will be governed by 37 CFR 1.136(a).

The above-identified application was filed December 19, 2001 without an executed oath or declaration and naming Peter Cooper as sole inventor. Accordingly, on January 14, 2002, a "Notice to File Missing Parts of Nonprovisional Application" was mailed, requiring an executed oath or declaration and surcharge.

A grantable petition under 37 CFR 1.47(b) requires: (1) proof that the non-signing inventor cannot be reached or refuses to sign the oath or declaration after having been presented with the application papers (specification, claims and drawings); (2) an acceptable oath or declaration in compliance with 35 U.S.C. §§ 115 and 116; (3) the petition fee;(4) a statement of the last known address of the non-signing inventor; (5) proof of proprietary interest; and (6) a showing that such action is required to preserve the rights of the parties or to prevent irreparable damages.

As to item (5), petitioner has presented no evidence of proprietary interest in the above-referenced application. Petitioner must establish that the invention has been assigned to applicant, that the inventor has agreed in writing to assign the invention to applicant, or that applicant otherwise has sufficient proprietary interest in the subject matter to justify the filing of the application. Petitioner must submit a copy of an employment agreement between the inventor and applicant or a legal memorandum signed by an attorney familiar with the law of the relevant jurisdiction stating that a court of competent jurisdiction would by weight of authority in that jurisdiction

award title of the invention to Rule 47 applicant.

As to item (3), the required petition fee of $130.00 has been charged to deposit account No. 01-2135 as authorized in the instant petition.

Further correspondence with respect to this matter should be addressed as follows:

By mail: Commissioner for Patents
Box DAC
Washington, D.C. 20231

By FAX: (703) 308-6916
Attn.: Office of Petitions

By hand: Crystal Plaza Four, Suite 3C23
2201 S. Clark Place
Arlington, VA

Telephone inquiries related to this decision may be directed to the undersigned at (703) 305-0310.

Alesia M. Brown
Petitions Attorney
Office of Petitions
Office of the Deputy Commissioner
for Patent Examination Policy

UNITED STATES PATENT AND TRADEMARK OFFICE

COMMISSIONER FOR PATENTS
UNITED STATES PATENT AND TRADEMARK OFFICE
WASHINGTON, D.C. 20231
www.uspto.gov

Paper No. 8

ANTONELLI TERRY STOUT AND KRAUS
SUITE 1800
1300 NORTH SEVENTEENTH STREET
ARLINGTON, VA 22209

COPY MAILED

FEB 14 2003

OFFICE OF PETITIONS

In re Application of Cooper Application No. 10/020,870 Filed: December 19, 2001 Atty. Dkt. No.: 1076.41017X00 For: DIGITAL CAMERA	DECISION GRANTING PETITION UNDER 37 CFR 1.47(b)

This is in response to the renewed petition under 37 CFR 1.47(b), filed October 11, 2002.

The petition is **GRANTED**.

Petitioner has shown that inventor Peter Cooper has refused to join in the filing of the above-identified application after having been presented with the application papers.

The above-identified application and papers have been reviewed and found in compliance with 37 CFR 1.47(b). This application is hereby accorded Rule 1.47(b) status.

As provided in Rule 1.47(c), this Office will forward notice of this application's filing to the non-signing inventor at the address given in the petition. Notice of the filing of this application will also be published in the Official Gazette.

After this decision is mailed, the above-identified application will be returned to the Office of Initial Patent Examination for further processing.

Telephone inquiries related to this decision may be directed to the undersigned at (703) 305-0310.

Alesia M. Brown
Petitions Attorney
Office of Petitions
Office of the Deputy Commissioner
for Patent Examination Policy

UNITED STATES PATENT AND TRADEMARK OFFICE

COMMISSIONER FOR PATENTS
UNITED STATES PATENT AND TRADEMARK OFFICE
WASHINGTON, D.C. 20231
www.uspto.gov

PETER COOPER
12 BUDYAN ROAD
GRAYS POINT NSW 2232
AUSTRALIA

COPY MAILED

FEB 14 2003

OFFICE OF PETITIONS

In re Application of
Cooper
Application No. 10/020,870
Filed: December 19, 2001
Atty. Dkt. No.: 1076.41017X00
For: DIGITAL CAMERA

LETTER

Dear Sir:

You are named as an inventor in the above-identified United States patent application filed under the provisions of 35 U.S.C. 116 (United States Code) and 37 C.F.R. § 1.47(b), Rules of Practice in Patent Cases. Should a patent be granted on the application you will be designated therein as a joint inventor.

As a named inventor you are entitled to inspect any paper in the file wrapper of the application, order copies of all or any part thereof (at a prepaid cost as per 37 C.F.R. § 1.19) or make your position of record in the application. Alternatively, you may arrange to do any of the preceding through a registered patent attorney or agent presenting written authorization from you. If you care to join the application, counsel of record (see below) would presumably assist you. Joining in the application would entail the filing of an appropriate oath or declaration by you pursuant to 37 C.F.R. § 1.63.

Telephone inquiries regarding this communication should be directed to the undersigned at (703) 305-0310. Requests for information regarding your application should be directed to the File Information Unit at (703) 308-2733. Information regarding how to pay for and order a copy of the application, or a specific paper in the application, should be directed to Certification Division at (703) 308-9726 or 1-800-972-6382 (outside the Washington D.C. area).

Alesia M. Brown
Petitions Attorney
Office of Petitions
Office of the Deputy Commissioner
for Patent Examination Policy

CC: ANTONELLI TERRY STOUT AND KRAUS
SUITE 1800
1300 NORTH SEVENTEENTH STREET
ARLINGTON, VA 22209

Under the Paperwork Reduction Act of 1995, no persons are required to respond to a collection of information unless it displays valid OMB control number.

PETITION TO ACCEPT UNINTENTIONALLY DELAYED PAYMENT OF MAINTENANCE FEE IN AN EXPIRED PATENT (37 CFR 1.378(c))

Patent Number	Issue Date (YYYY-MM-DD)	Application Number	Filing Date (YYYY-MM-DD)	Docket Number (if applicable)
6,568,946	2003-05-27	10020901	2001-12-19	3092-255

CAUTION: Maintenance fee (and surcharge, if any) payment must correctly identify: (1) the patent number and (2) the application number of the actual U.S. application leading to issuance of that patent to ensure the fee(s) is/are associated with the correct patent. 37 CFR 1.366(c) and (d).

SMALL ENTITY
☒ Patentee claims, or has previously claimed, small entity status. See 37 CFR 1.27.

LOSS OF ENTITLEMENT TO SMALL ENTITY STATUS
☐ Patentee is no longer entitled to small entity status. See 37 CFR 1.27(g)

NOT Small Entity		Small Entity	
Fee	Code	Fee	Code
○ 3 ½ year	(1551)	◉ 3 ½ year	(2551)
○ 7 ½ year	(1552)	○ 7 ½ year	(2552)
○ 11 ½ year	(1553)	○ 11 ½ year	(2553)

SURCHARGE
The surcharge required by 37 CFR 1.20(i)(2) (Fee Code 1558) must be paid as a condition of accepting unintentionally delayed payment of the maintenance fee.

MAINTENANCE FEE (37 CFR 1.20(e)-(g))
The appropriate maintenance fee must be submitted with this petition.

STATEMENT
THE UNDERSIGNED CERTIFIES THAT THE DELAY IN PAYMENT OF THE MAINTENANCE FEE TO THIS PATENT WAS UNINTENTIONAL

PETITIONER(S) REQUEST THAT THE DELAYED PAYMENT OF THE MAINTENANCE FEE BE ACCEPTED AND THE PATENT REINSTATED

THIS PORTION MUST BE COMPLETED BY THE SIGNATORY OR SIGNATORIES

37 CFR 1.378(d) states: "Any petition under this section must be signed by an attorney or agent registered to practice before the Patent and Trademark Office, or by the patentee, the assignee, or other party in interest."

I certify, in accordance with 37 CFR 1.4(d)(4) that I am

◉ An attorney or agent registered to practice before the Patent and Trademark Office

○ A sole patentee

○ A joint patentee; I certify that I am authorized to sign this submission on behalf of all the other patentees.

○ A joint patentee; all of whom are signing this e-petition

○ The assignee of record of the entire interest

Patent Practitioner			
A signature of the applicant or representative is required in accordance with 37 CFR 1.33 and 10.18. Please see 37 CFR 1.4(d) for the form of the signature			
Signature	/Bruce H. Troxell/	Date (YYYY-MM-DD)	2008-07-27
Name	Bruce H. Troxell	Registration Number	26592

This collection of information is required by 37 CFR 1.378(c). The information is required to obtain or retain a benefit by the public which is to file (and by the USPTO to process) an application. Confidentiality is governed by 35 U.S.C. 122 and 37 CFR 1.11 and 1.14. This collection is estimated to take 1 hour to complete, including gathering, preparing, and submitting the completed application form to the USPTO. Time will vary depending upon the individual case. Any comments on the amount of time you require to complete this form and/ or suggestions for reducing this burden, should be sent to the Chief Information Officer, U.S. Patent and Trademark Office, U.S. Department of Commerce, P.O. Box 1450, Alexandria, VA 22313-1450. DO NOT SEND FEES OR COMPLETED FORMS TO THIS ADDRESS. **This form can only be used when in conjunction with EFS-Web. If this form is mailed to the USPTO, it may cause delays in reinstating the patent.**

Privacy Act Statement

The Privacy Act of 1974 (P.L. 93-579) requires that you be given certain information in connection with your submission of the attached form related to a patent application or patent. Accordingly, pursuant to the requirements of the Act, please be advised that: (1) the general authority for the collection of this information is 35 U.S.C. 2(b)(2); (2) furnishing of the information solicited is voluntary; and (3) the principal purpose for which the information is used by the U.S. Patent and Trademark Office is to process and/or examine your submission related to a patent application or patent. If you do not furnish the requested information, the U.S. Patent and Trademark Office may not be able to process and/or examine your submission, which may result in termination of proceedings or abandonment of the application or expiration of the patent.

The information provided by you in this form will be subject to the following routine uses:

1. The information on this form will be treated confidentially to the extent allowed under the Freedom of Information Act (5 U.S.C. 552) and the Privacy Act (5 U.S.C. 552a). Records from this system of records may be disclosed to the Department of Justice to determine whether the Freedom of Information Act requires disclosure of these record s.

2. A record from this system of records may be disclosed, as a routine use, in the course of presenting evidence to a court, magistrate, or administrative tribunal, including disclosures to opposing counsel in the course of settlement negotiations.

3. A record in this system of records may be disclosed, as a routine use, to a Member of Congress submitting a request involving an individual, to whom the record pertains, when the individual has requested assistance from the Member with respect to the subject matter of the record.

4. A record in this system of records may be disclosed, as a routine use, to a contractor of the Agency having need for the information in order to perform a contract. Recipients of information shall be required to comply with the requirements of the Privacy Act of 1974, as amended, pursuant to 5 U.S.C. 552a(m).

5. A record related to an International Application filed under the Patent Cooperation Treaty in this system of records may be disclosed, as a routine use, to the International Bureau of the World Intellectual Property Organization, pursuant to the Patent Cooperation Treaty.

6. A record in this system of records may be disclosed, as a routine use, to another federal agency for purposes of National Security review (35 U.S.C. 181) and for review pursuant to the Atomic Energy Act (42 U.S.C. 218(c)).

7. A record from this system of records may be disclosed, as a routine use, to the Administrator, General Services, or his/her designee, during an inspection of records conducted by GSA as part of that agency's responsibility to recommend improvements in records management practices and programs, under authority of 44 U.S.C. 2904 and 2906. Such disclosure shall be made in accordance with the GSA regulations governing inspection of records for this purpose, and any other relevant (i.e., GSA or Commerce) directive. Such disclosure shall not be used to make determinations about individuals.

8. A record from this system of records may be disclosed, as a routine use, to the public after either publication of the application pursuant to 35 U.S.C. 122(b) or issuance of a patent pursuant to 35 U.S.C. 151. Further, a record may be disclosed, subject to the limitations of 37 CFR 1.14, as a routine use, to the public if the record was filed in an application which became abandoned or in which the proceedings were terminated and which application is referenced by either a published application, an application open to public inspections or an issued patent.

9. A record from this system of records may be disclosed, as a routine use, to a Federal, State, or local law enforcement agency, if the USPTO becomes aware of a violation or potential violation of law or regulation.

UNITED STATES PATENT AND TRADEMARK OFFICE

Commissioner for Patents
United States Patent and Trademark Office
P.O. Box 1450
Alexandria, VA 22313-1450
www.uspto.gov

In re Patent No. 6568946
Issue Date: May 27,2003
Application No. 10020901
Filed: December 19,2001
Attorney Docket No. BHT-3092-255

:

:DECISION GRANTING PETITION
:UNDER 37 CFR 1.378(c)

:

This is a decision on the electronic petition, filed July 27,2008 ,under 37 CFR 1.378(c) to accept the unintentionally delayed payment of the 3.5 year maintenance fee for the above-identified patent.

The petition is GRANTED.

The maintenance fee is accepted, and the above-identified patent reinstated as of July 27,2008 . This decision also constitutes notice that the fee has been accepted. An electronic copy of the petition and this decision has been created as an entry in an Image File Wrapper. Nevertheless, petitioner should print and retain an independent copy

Telephone inquires related to this electronic decision should be directed to the Electronic Business Center at 1-866-217-9197.

UNITED STATES PATENT AND TRADEMARK OFFICE

Commissioner for Patents
United States Patent and Trademark Office
P.O. Box 1450
Alexandria, VA 22313-1450
www.uspto.gov

ALSTON & BIRD LLP
BANK OF AMERICA PLAZA
101 SOUTH TRYON STREET, SUITE 4000
CHARLOTTE NC 28280-4000

COPY MAILED

JUL 18 2006

OFFICE OF PETITIONS

In re Application of	:	
Francis Emmerson et al	:	
Application No. 10/020,924	:	ON PETITION
Filed: December 19, 2001	:	
Attorney Docket No. 042933/306334	:	

This is a decision on the petition, filed July 13, 2006, under 37 CFR 1.313(c)(2) to withdraw the above-identified application from issue after payment of the issue fee.

The petition is **GRANTED**.

The above-identified application is withdrawn from issue for consideration of a submission under 37 CFR 1.114 (request for continued examination). See 37 CFR 1.313(c)(2).

Petitioner is advised that the issue fee paid on July 15, 2005, in the above-identified application cannot be refunded. If, however, the above-identified application is again allowed, petitioner may request that it be applied towards the issue fee required by the new Notice of Allowance.[1]

Telephone inquiries should be directed to the undersigned at (571) 272-3208.

The examiner of Technology Center AU 3714 will consider the request for continued examination under 37 CFR 1.114.

Karen Creasy

Karen Creasy
Petitions Examiner
Office of Petitions

---

[1] The request to apply the issue fee to the new Notice may be satisfied by completing and returning the new Issue Fee Transmittal Form PTOL-85(b), which includes the following language thereon: "Commissioner for Patents is requested to apply the Issue Fee and Publication Fee (if any) or re-apply any previously paid issue fee to the application identified above." Petitioner is advised that, whether a fee is indicated as being due or not, the Issue Fee Transmittal Form **must** be completed and timely submitted to avoid abandonment. Note the language in bold text on the first page of the Notice of Allowance and Fee(s) Due (PTOL-85).

SPE RESPONSE FOR CERTIFICATE OF CORRECTION

Paper No.: 20060316

DATE : 02/22/06

TO SPE OF : ART UNIT **2653**

SUBJECT : Request for Certificate of Correction on Patent No.: 10/020980 6963531

A response is requested with respect to the accompanying request for a certificate of correction.

Please complete this form and return with file, within **7** days to:
Palm location **7580, Certificates of Correction Branch – South Tower – 9A22**
If response is for an IFW, **return to employee (named below) via PUBSCofC Team in MADRAS.**
With respect to the change(s) requested, correcting Office and/or Applicant's errors, should the patent read as shown in the certificate of correction (COCIN)? No new matter should be introduced, nor should the scope or meaning of the claims be changed.

Thank You For Your Assistance

Angela Green
Certificates of Correction Branch
Tel. No. 703-305-9380 ext. 123

The request for issuing the above-identified correction(s) is hereby:
Note your decision on the appropriate box.

- ☑ **Approved** — **All** changes apply.
- ☐ **Approved in Part** — Specify below which changes **do not** apply.
- ☐ **Denied** — State the reasons for denial below.

Comments:

Admin SPE, for: Hoa Nguyen
SPE

2656
Art Unit

UNITED STATES PATENT AND TRADEMARK OFFICE

Commissioner for Patents
United States Patent and Trademark Office
P.O. Box 1450
Alexandria, VA 22313-1450
www.uspto.gov

PILLSBURY WINTHROP SHAW PITTMAN LLP
1650 TYSONS BOULEVARD
SUITE 1300
MCLEAN, VA 22102

COPY MAILED
MAY 16 2005
OFFICE OF PETITIONS

In re Application of :
Scott C. Holt et al :
Application No. 10/021,049 :
Filed: December 19, 2001 :
Attorney Docket No. BS01-143 :

DECISION ON PETITION
UNDER 37 CFR 1,137(b)

This is a decision on the petition, filed September 17, 2004, which is being treated as a petition under 37 CFR 1.137(b) to revive the instant nonprovisional application for failure to timely notify the U.S. Patent and Trademark (USPTO) of the filing of an application in a foreign country, or under a multinational treaty that requires publication of applications eighteen months after filing. See 37 CFR 1.137(f).

The petition is **GRANTED**.

Petitioner states that the instant nonprovisional application is the subject of an application filed in an eighteen months publication country on December 13, 2002. However, the USPTO was unintentionally not notified of this filing within 45 days subsequent to the filing of the subject application in an eighteen months publication country.

In view of the above, this application became abandoned pursuant to 35 U.S.C. § 122(b)(2)(B)(iii) and 37 CFR 1.213(c) for failure to timely notify the Office of the filing of an application in a foreign country, or under a multilateral international agreement, that requires publication of applications 18 months after filing.

A petition to revive an application abandoned pursuant to 35 U.S.C. 122(b)(2)(B)(iii) for failure to notify the USPTO of a foreign filing must be accompanied by:

(1) the required reply which is met by the notification of such filing in a foreign country or under a multinational treaty;

(2) the petition fee as set forth in 37 CFR 1.17(m); and

(3) a statement that the entire delay in filing the required reply from the due date of the reply until the filing of a grantable petition was unintentional.

The instant petition has been found to be in compliance with 37 CFR 1.137(b). Accordingly, the failure to timely notify the USPTO of a foreign or international filing within 45 days after the date of filing of

such foreign or international application as provided by 35 U.S.C. § 122(b)(2)(B)(iii) and 37 CFR 1.213(c) is accepted as having been unintentionally delayed.

Any inquiries concerning this decision may be directed to Irvin Dingle at (571) 272-3210.

Irvin Dingle
Petitions Examiner
Office of Petitions
Office of the Deputy Commissioner
for Patent Examination Policy

UNITED STATES PATENT AND TRADEMARK OFFICE

COMMISSIONER FOR PATENTS
UNITED STATES PATENT AND TRADEMARK OFFICE
P.O. BOX 1450
ALEXANDRIA, VA 22313-1450
www.uspto.gov

BORDEN LADNER GERVAIS LLP
WORLD EXCHANGE PLAZA
100 QUEEN STREET SUITE 1100
OTTAWA ON K1P 1J9 CA CANADA

COPY MAILED

JUL 0 2 2004

OFFICE OF PETITIONS

Applicant: Brissette
Appl. No.: 10/021,054
Filed: December 19, 2001
Title: TANDEM CONNECTION MONITORING
Attorney Docket No.: 583P17US
Pub. No.: US 2003/0115307 A1
Pub. Date: June 19, 2003

This is in response to the request for correction of patent application publication under 37 CFR 1.221(b), which was received on August 19, 2003.

The request is DISMISSED.

The instant request is that the application be republished because the patent application publication includes errors in claim 5, paragraph (b) wherein the line improperly ends with "transit", not "transit through", as filed and in paragraph (e) which improperly includes the phrase "by a transmitting unit".

37 CFR 1.221(b) is applicable "only when the Office makes a material mistake which is apparent from Office records . . . Any request for a corrected publication or revised patent application publication other than provided as provided in paragraph (a) of this section must be filed within two months from the date of the patent application publication." A material mistake must affect the public's ability to appreciate the technical disclosure of the patent application publication, to determine the scope of the patent application publication, or to determine the scope of the provisional rights that an applicant may seek to enforce upon issuance of a patent.[1]

The patent application publication does not include a material error and the application was properly published. With respect to the alleged errors in paragraphs (b) and (e), the corrections will not be made as the published application correctly reflects the application as originally filed. The phrase "transit through" does not occur in paragraph (b) and the phrase "by a transmitting unit" ends paragraph (e).

---

[1] Changes to Implement Eighteen-Month Publication of Patent Applications, 65 FR 57023, 57038 (Sept. 20, 2000), 1239 Off. Gaz. Pat. Office Notices 63, 75 (Oct. 10, 2000) (final rule).

Applicant's request for a corrected patent application publication on August 19, 2003, may constitute a "failure to engage in reasonable efforts to conclude processing or examination of the application." See 1.704(c). This determination will be made on or after a mailing of a Notice of Allowance.

The applicant is advised that a "request for republication of an application previously published" may be filed under 37 CFR 1.221(a). Such a request for republication "must include a copy of the application in compliance with the Office's electronic filing system requirements and be accompanied by the publication fee set forth in § 1.18(d) and the processing fee set forth in § 1.17(i)." If the request for republication does not comply with the electronic filing system requirements, the republication will not take place and the publication fee set forth in § 1.18(d) will be refunded. The processing fee will be retained.

Any request for republication under 37 CFR 1.221(a), should be submitted via the EFS system and questions should be addressed as follows:

By mail to: Mail Stop PGPUB
Commissioner for Patents
P.O. Box 1450
Alexandria, VA 22313-1450

By facsimile: 703-872-9306

The application will be examined in due course.

Inquires concerning this communication should be directed to Mark Polutta at (703) 308-8122 (voice) or (703) 746-3465 (facsimile).

Mark O. Polutta
Office of Patent Legal Administration
Office of the Deputy Commissioner
for Patent Examination Policy

SPE RESPONSE FOR CERTIFICATE OF CORRECTION

Paper No.: _____

DATE :12/12/05

TO SPE OF : ART UNIT **2114**

SUBJECT : Request for Certificate of Correction on Patent No.: 10/021054 6938187

A response is requested with respect to the accompanying request for a certificate of correction.

Please complete this form and return with file, within 7 days to:
Palm location **7580, Certificates of Correction Branch – South Tower – 9A22**
If response is for an IFW, **return to employee (named below) via PUBSCofC Team in MADRAS.**
With respect to the change(s) requested, correcting Office and/or Applicant's errors, should the patent read as shown in the certificate of correction (COCIN)? No new matter should be introduced, nor should the scope or meaning of the claims be changed.

Thank You For Your Assistance

A. Green

Angela Green
Certificates of Correction Branch
Tel. No. 703-305-9380 ext. 123

The request for issuing the above-identified correction(s) is hereby:
Note your decision on the appropriate box.

- ☐ **Approved** — All changes apply.
- ☐ **Approved in Part** — Specify below which changes **do not** apply.
- ☑ **Denied** — State the reasons for denial below.

Comments:

Change to column 13, line 25, claim 1 changes the scope of the claim which is prohibited.

SCOTT BADERMAN
SUPERVISORY PATENT EXAMINER
SPE

2114
Art Unit

SPE RESPONSE FOR CERTIFICATE OF CORRECTION

Paper No.: _____

DATE : 11/15/06

TO SPE OF : ART UNIT 2114

SUBJECT : Request for Certificate of Correction for Appl. No.: **10/021054** Patent No.: **6938187**

Please respond to this request for a certificate of correction within 7 days.

Please review the requested changes/corrections as shown in the **COCIN** document(s) in the IFW application image. No new matter should be introduced, nor should the scope or meaning of the claims be changed.

Please complete the response (see below) and forward the completed response to scanning using document code **COCX**.

A. Green

Angela Green
Certificates of Correction Branch
703.308.9380 ext. 123

Thank You For Your Assistance

The request for issuing the above-identified correction(s) is hereby:
Note your decision on the appropriate box.

- ☑ **Approved** — **All** changes apply.
- ☐ **Approved in Part** — Specify below which changes **do not** apply.
- ☐ **Denied** — State the reasons for denial below.

Comments: _____

SCOTT BADERMAN
SUPERVISORY PATENT EXAMINER
SPE

2114
Art Unit

#6
7-1-03

UNITED STATES PATENT AND TRADEMARK OFFICE

COMMISSIONER FOR PATEN
UNITED STATES PATENT AND TRADEMARK OFFI
WASHINGTON, D.C. 2023
www.uspto.g

MAILED

JUL 01 2003

TECHNOLOGY CENTER 2100

Paper No. 6

Paul J. Skwierawski
ANTONELLI, TERRY, STOUT &
KRAUS, LLP
1300 North Seventeenth Street, Suite 1800
Arlington, VA 22209

In re Application of:	)	
Wong, et al.	)	
Application No. 10/021,058	)	**DECISION ON REQUEST FOR**
Filed: December 19, 2001	)	**WITHDRAWAL AS ATTORNEY**
For: METHOD AND APPARATUS FOR OPTIMIZING CLOCK DISTRIBUTION TO REDUCE THE EFFECT OF POWER SUPPLY NOISE	)	

This is a decision on the Request To Withdraw from Representation filed June 23, 2003.

A grantable request to withdraw as attorney of record should indicate thereon the present mailing addresses of the attorney(s) who is/are withdrawing from the record and of the applicant. The request for withdrawal must be signed by every attorney seeking to withdraw or contain a clear indication that one attorney is signing on behalf of another/others. A request to withdraw will not be approved unless at least 30 (thirty) days would remain between the date of approval and the later of the expiration date of a time to file a response or the expiration date of the maximum time period which can be extended under 37 C.F.R. § 1. 136(a). The effective date of withdrawal being the date of decision and not the date of request. See M.P.E.P. § 402.06. 37 C.F.R. § 1.36 further requires that the applicant or patent owner be notified of the withdrawal of the attorney or agent.

The request filed June 23, 2003 meets all the requirements. Accordingly the request is **GRANTED**.

All future communications from the Office will be directed to the below-listed address until otherwise notified by applicant. This correspondence address is provided by the withdrawn attorney(s). Applicant is reminded of the obligation to promptly notify the Patent and Trademark Office (Office) of any change in correspondence address to ensure receipt of all communications from the Office.

James R. Matthews

JM Vincent N. Trans
Special Programs Examiner
Technology Center 2100
Computer Architecture and Software
(703) 305-9750

cc: Grace Abercrombie
BLAKELY, SOKOLOFF, TAYLOR &
ZAFMAN LLP
1279 Oakmead Parkway
Sunnyvale, CA 94086

UNITED STATES PATENT AND TRADEMARK OFFICE

Commissioner for Patents
United States Patent and Trademark Office
P.O. Box 1450
Alexandria, VA 22313-1450
www.uspto.gov

AT&T LEGAL DEPARTMENT - T&W
ATTN: PATENT DOCKETING
ROOM 2A-207
ONE AT&T WAY
BEDMINSTER NJ 07921

MAILED

APR 09 2010

OFFICE OF PETITIONS

In re Application of :
Howard Fingerhut :
Application No. 10/021,098 : ON PETITION
Filed: December 12, 2001 :
Attorney Docket No. 00345/ATTWP273US :

This is a decision on the petition filed February 2, 2010 to revive the above-identified application and on the request for refund filed on even date. The petition is being treated as a petition to withdraw the holding of abandonment. under 37 CFR 1.181, in accordance with the reasoning of the decision in Delgar Inc. v. Schuyler, 172 USPQ 513.

The petition under 37 CFR 1.181 is **GRANTED**.

This application became abandoned for failure to pay the issue fee on or before September 26, 2009 as was required by the Notice of Allowance mailed June 26, 2009. This application therefore became abandoned on September 29, 2009. Accordingly, a Notice of Abandonment was mailed October 13, 2009.

Petitioner claims that the Notice of Allowance was not received because a previously filed Power of Attorney and Change of Address were not processed.

A review of the file reveals however that a power of attorney and address change was filed on March 9, 2009 but that the information was not updated prior to the mailing of the Notice of Allowance and Notice of Allowability on June 26, 2009. Thus, the Office Action was mailed to the wrong address and as petitioners claim, not received.

In view of the above, no petition fees are due and a refund in the amount of $1620 will be processed to the credit card used.

The Notice of Abandonment is withdrawn and since the issue fee has been paid with the instant petition, this matter is being referred to the Publishing Division to be processed into a patent.

Telephone inquiries concerning this matter should be directed to the undersigned Petitions Attorney at (571) 272-3212.

Patricia Faison-Ball

Patricia Faison-Ball
Senior Petitions Attorney
Office of Petitions

UNITED STATES PATENT AND TRADEMARK OFFICE

COMMISSIONER FOR PATENTS
UNITED STATES PATENT AND TRADEMARK OFFICE
WASHINGTON, D.C. 20231
www.uspto.gov

Paper No. 5

CARLSON GASKEY & OLDS P.C.
400 WEST MAPLE ROAD
SUITE 350
BIRMINGHAM, MI 48009

COPY MAILED

JUN 13 2002

OFFICE OF PETITIONS

In re Application of	:	
Ragnar Ledesma et al	:	DECISION GRANTING
Application No. 10/021,128	:	PETITION
Filed: December 12, 2001	:	
Attorney Docket No. 60130-986 00MRA	:	
0576	:	

This is a decision on the petition under 37 CFR 1.10(c) filed on January 22, 2002 (original copy) and May 24, 2002 (faxed copy), which is properly treated as a petition under 37 CFR 1.10(d), requesting that the above-identified application be accorded a filing date of December 12, 2001, rather than the presently accorded filing date of December 19, 2001.

Applicants request the earlier filing date on the basis that the application was purportedly deposited with the U.S. Postal Service (USPS) as Express Mail on December 12, 2001, pursuant to the requirements of 37 CFR 1.10. The petition is accompanied by a copy of the USPS Track/Confirm system information showing that the package bearing Express Mail label No. EL747232823US was enroute on December 12, 2001. The same Express Mail receipt number appears on the copy of the original application transmittal letter submitted with present petition.

In view of the above, the evidence is convincing that the application was deposited as "Express Mail" with the US Postal Service on December 12, 2001.

The petition is granted.

No petition fee is required and none has been charged.

The application is being returned to Initial Patent Examination Division for correction of the filing date to December 12, 2001.

Telephone inquiries specific to this matter should be directed to Wan Laymon at (703) 306-5685.

Sherry Brinkley
Petitions Examiner
Office of Petitions
Office of the Deputy Commissioner
for Patent Examination Policy

UNITED STATES PATENT AND TRADEMARK OFFICE

Commissioner for Patents
United States Patent and Trademark Office
P. O. Box 1450
Alexandria, VA 22313-1450
www.uspto.gov

Paper No. 10

McDonnell Boehnen Hulbert & Berghoff
32nd Floor
300 S. Wacker Drive
Chicago IL 60606

COPY MAILED
SEP 25 2003
OFFICE OF PETITIONS

In re Application of GRABELSKY Application No. 10/021,171 Filed: December 12, 2001 Attorney Docket No. 01-1719	DECISION GRANTING PETITION UNDER 37 CFR 1.137(b)

This is a decision on the petition, filed May 9, 2003, which is being treated as a petition under 37 CFR 1.137(b) to revive the present nonprovisional application for failure to timely notify the U.S. Patent and Trademark (USPTO) of the filing of an application in a foreign country, or under a multinational treaty that requires publication of applications eighteen months after filing. *See* 37 CFR 1.137(f).

The petition is **GRANTED**.

Petitioner states petitioner filed PCT Application Serial Number PCT/US02/39717 on December 12, 2002. However, the USPTO was unintentionally not notified of this filing within 45 days subsequent to the filing of the subject application in an eighteen month publication country.

In view of the above, this application became abandoned pursuant to 35 U.S.C. 122(b)(2)(B)(iii) and 37 CFR 1.213(c) for failure to timely notify the Office of the filing of an application in a foreign country or under a multilateral international agreement that requires publication of applications 18 months after filing.

A petition to revive an application abandoned pursuant to 35 U.S.C. 122(b)(2)(B)(iii) for failure to notify the USPTO of a foreign filing must be accompanied by:

(1) the required reply which is met by the notification of such filing in a foreign country or under a multinational treaty;

(2) the petition fee as set forth in 37 CFR 1.17(m); and

(3) a statement that the entire delay in filing the required reply from the due date of the reply until the filing of a grantable petition was unintentional.

The present petition has been found to be in compliance with 37 CFR 1.137(b). Accordingly, the failure to timely notify the USPTO of a foreign or international filing within 45 days after the date of filing of such foreign or international application as provided by 35 U.S.C. 122(b)(2)(B)(iii) and 37 CFR 1.213(c) is accepted as having been unintentionally delayed.

The previous Request and Certification under 35 U.S.C. 122(b)(2)(B)(i) has been rescinded. A Communication Regarding Rescission of Nonpublication Request and/or Foreign Filing which sets forth the projected publication date of January 1, 2004, accompanies this decision on petition.

This application is being forwarded to Technology Center Art Unit 2154 for examination in due course.

Any inquiries concerning this decision may be directed to the undersigned at (703) 306-5589.

Christina Tartera Donnell

Christina Tartera Donnell
Senior Petitions Attorney
Office of Petitions

Enclosure: Communication Regarding Rescission of Nonpublication Request and/or Foreign Filing

PTO/SB/24 (08-03)
Approved for use through 07/31/2006. OMB 0651-0031
U.S. Patent and Trademark Office; U.S. DEPARTMENT OF COMMERCE
Under the Paperwork Reduction Act of 1995, no persons are required to respond to a collection of information unless it displays a valid OMB control number.

EXPRESS ABANDONMENT UNDER 37 CFR 1.138

Application Number	10/021,174
Filing Date	10/29/2001
First Named Inventor	ANGST et al.
Art Unit	2822
Examiner Name	R. POTTER
Attorney Docket Number	ANGST 1-1-11-21-26

Send Completed form to:
Commisioner for Patents, P.O. Box 1450, Alexandria, VA 22313-1450

Please **check only one** of boxes 1 or 2 below:
(If no box is checked, this paper will be treated as a request for express abandonment as of the filing date of this

1. ☒ **Express Abandonment**
I request that the above-identified application be expressly abandoned as of the filing date of this paper.

2. ☐ **Express Abandonment in favor of a Continuing Application**
I request that the above-identified application be expressly abandoned as of the filing date accorded the continuing application filed previously or herewith.

NOTE: A paper requesting express abandonment of an application is not effective unless and until an appropriate USPTO official recognizes and acts on the paper. See the Manual of Patent Examining Procedure (MPEP), section 711.01.

TO AVOID PUBLICATION, PLEASE USE FORM PTO/SB/24A INSTEAD OF THIS FORM.

I am the:
- ☐ applicant.
- ☐ assignee of record of the entire interest. See 37 CFR 3.71
  Statement under 37 CFR 3.73(b) is enclosed. (Form PTO/SB/96).
- ☒ attorney or agent of record. Registration Number 24,950
- ☐ attorney or agent acting under 37 CFR 1.34(a) (may act under 37 CFR 1.34(a) only if box 2 above, stating that the application is expressly abandoned in favor of a continuing application, is checked.) Attorney or agent registration number if acting under 37 CFR 1.34(a). _____
  (Attorney or agent registration number)

Glen E. Books
Signature

01/23/2004
Date

GLEN E. BOOKS
Typed or printed name

973-597-6162
Telephone Number

Note: Signatures of all the inventors or assignees of record of the entire interest or their representatives(s) are required. Submit multiple forms if more than one signature is required, See below*.
☒ Total of 1 forms are submitted.

This collection of information is required by 37 CFR 1.138. The information is required to obtain or retain a benefit by the public which is to file (and by the USPTO to process) an application. Confidentiality is governed by 35 U.S.C. 122 and 37 CFR 1.14. This collection is estimated to take 12 minutes to complete, including gathering, preparing, and submitting the completed application form to the USPTO. Time will vary depending upon the individual case. Any comments on the amount of time you require to complete this form and/or suggestions for reducing this burden, should be sent to the Chief Information Officer, U.S. Patent and Trademark Office, U.S. Department of Commerce, P.O. Box 1450, Alexandria, VA 22313-1450. DO NOT SEND FEES OR COMPLETED FORMS TO THIS ADDRESS. SEND TO: **Commissioner for Patents, P.O. Box 1450, Alexandria, VA 22313-1450.**

If you need assistance in completing the form, call 1-800-PTO-9199 and select option 2.

UNITED STATES PATENT AND TRADEMARK OFFICE

COMMISSIONER FOR PATENTS
UNITED STATES PATENT AND TRADEMARK OFFICE
P.O. BOX 1450
ALEXANDRIA, VA 22313-1450
www.uspto.gov

Lowenstein Sandler PC
65 Livingston Avenue
Roseland, NJ 07068

COPY MAILED
JUL 1 5 2004
OFFICE OF PETITIONS

In re Application of
David L. Angst, et al.
Application No. 10/021,174
Filed: October 29, 2001
Attorney Docket No. ANGST 3-2-18-40-42

ON PETITION

This is a decision on the petition under 37 CFR 1.137(b), filed March 10, 2004, to revive the above-identified application.

The petition is **GRANTED**.

Telephone inquiries concerning this decision should be directed to the undersigned at (703) 306-3475.

The application file is being forwarded to Technology Center 2800.

Marianne E. Morgan
Petitions Examiner
Office of Petitions
Office of the Deputy Commissioner
for Patent Examination Policy

UNITED STATES PATENT AND TRADEMARK OFFICE

Commissioner for Patents
United States Patent and Trademark Office
P.O. Box 1450
Alexandria, VA 22313-1450
www.uspto.gov

Paper No. 9

MacPherson, Kwok, Chen & Heid, LLP
1762 Technology Drive, Suite 226
San Jose, CA 95110

COPY MAILED

MAY 17 2005

OFFICE OF PETITIONS

In re Application of	:	
C. David Capps	:	
Application No. 10/021,185	:	ON PETITION
Filed: December 7, 2001	:	
Attorney Docket No. M-15660 US	:	

This is a decision on the petition under 37 CFR 1.137(b), filed by facsimile transmission on December 30, 2004, to revive the above-identified application.

As authorized, the petition fee of $1,500 has been charged to petitioner's deposit account.

The petition is **GRANTED**.

The application file is being forwarded to Technology Center Art Unit 2873, for review of the amendment filed with the instant petition.

Telephone inquiries concerning this decision should be directed to the undersigned at (571) 272-3226.

Andrea Smith
Petitions Examiner
Office of Petitions
Office of the Deputy Commissioner
for Patent Examination Policy

UNITED STATES PATENT AND TRADEMARK OFFICE

COMMISSIONER FOR PATENTS
UNITED STATES PATENT AND TRADEMARK OFFICE
P.O. BOX 1450
ALEXANDRIA, VA 22313-1450
WWW.USPTO.GOV

Paper No. 9

THOMPSON & KNIGHT LLP
PATENT PROSECUTION DEPARTMENT
98 SAN JACINTO BLVD
SUITE 1200
AUSTIN TX 78701

COPY MAILED

AUG 21 2003

OFFICE OF PETITIONS

In re Application of :
Gary Heartsfield :
Application No. 10/021,208 :
Filed: December 7, 2001 : DECISION ON PETITION
Attorney Docket No. 077662.000008 :

This is a decision on the petition to revive under 37 CFR 1.137(b), pursuant to 37 CFR 1.137(f), filed July 31, 2003.

The petition is **GRANTED**.

Petitioner states that the instant application is the subject of a PCT international application filed on December 6, 2002. However, the US Patent and Trademark Office was unintentionally not notified of this filing within 45 days subsequent to the filing of the PCT application.

In view of the above, this application became abandoned pursuant to 35 USC 122(b)(2)(B)(iii) and 37 CFR 1.213(c) for failure to timely notify the Office of the filing of an application in a foreign country, or under a multilateral international agreement, that requires publication of applications 18 months after filing.

A petition under 37 CFR 1.137(f) must be accompanied by:

(1) the reply, which is met by the notification of such filing in a foreign country or under a multinational treaty;

(2) the petition fee as set forth in 37 CFR 1.17(m); and

(3) a statement that the entire delay in filing the required reply from the due date of the reply until the filing of a grantable petition was unintentional.

The instant petition has been found to be in compliance with 37 CFR 1.137(f). Accordingly, the failure to timely notify the Office of a foreign or international filing within 45 days after the date of filing of such foreign or international application as provided by 35 USC 122(b)(2)(B)(iii) and 37 CFR 1.213(c) is accepted as having been unintentionally delayed.

The previous Request and Certification under 35 USC 122(b)(2)(B)(i) has been rescinded. A Notice Regarding Rescission of Nonpublication Request indicating a projected publication date of November 27, 2003 accompanies this decision on petition.

The application is being forwarded to Technology 1700 to await for applicant's response to the final Office action, mailed July 28, 2003.

Telephone inquiries regarding this decision should be directed to the undersigned at (703) 305-0272.

Cliff Congo

Cliff Congo
Petitions Attorney
Office of Petitions

Enc: Notice Regarding Rescission of Nonpublication Request and Notice of Foreign Filing (2 pages)

UNITED STATES PATENT AND TRADEMARK OFFICE

Commissioner for Patents
United States Patent and Trademark Office
P.O. Box 1450
Alexandria, VA 22313-1450
www.uspto.gov

MICHAEL BEST & FRIEDRICH LLP
ONE SOUTH PINCKNEY STREET
P O BOX 1806
MADISON, WI 53701

COPY MAILED

MAR 1 0 2005

OFFICE OF PETITIONS

In re Application of
David Edwin Thurston et al
Application No. 10/021,213
Filed: December 12, 2001
Attorney Docket No. 065435-9010

DECISION GRANTING PETITION
UNDER 37 CFR 1.313(c)(2)

This is a decision on the petition, filed February 16, 2005, under 37 CFR 1.313(c)(2) to withdraw the above-identified application from issue after payment of the issue fee.

The petition is **GRANTED**.

The above-identified application is withdrawn from issue for consideration of a submission under 37 CFR 1.114 (request for continued examination). See 37 CFR 1.313(c)(2).

Petitioner is advised that the issue fee paid on February 23, 2004 in the above-identified application cannot be refunded. If, however, the above-identified application is again allowed, petitioner may request that it be applied towards the issue fee required by the new Notice of Allowance.[1]

Telephone inquiries should be directed to the undersigned at (571) 272-3218.

Upon receipt of the file in the Office of Petitions and association of the instant petition, RCE, IDS, amendment, drawings, and decision on petition with the file, the file will be forwarded to Technology Center AU 1624 for processing of the request for continued examination under 37 CFR 1.114 and for consideration of the concurrently amendment and Information Disclosure Statement.

Frances Hicks
Petitions Examiner
Office of Petitions
Office of the Deputy Commissioner
for Patent Examination Policy

---

[1] *The request to apply the issue fee to the new Notice may be satisfied by completing and returning the new Issue Fee Transmittal Form PTOL-85(b), which includes the following language thereon: "Commissioner for Patents is requested to apply the Issue Fee and Publication Fee (if any) or re-apply any previously paid issue fee to the application identified above." Petitioner is advised that, whether a fee is indicated as being due or not, the Issue Fee Transmittal Form* ***must*** *be completed and timely submitted to avoid abandonment. Note the language in bold text on the first page of the Notice of Allowance and Fee(s) Due (PTOL-85).*

UNITED STATES PATENT AND TRADEMARK OFFICE

UNITED STATES DEPARTMENT OF COMMERCE
United States Patent and Trademark Office
Address: COMMISSIONER FOR PATENTS
P.O. Box 1450
Alexandria, Virginia 22313-1450
www.uspto.gov

STERNE, KESSLER, GOLDSTEIN & FOX P.L.L.C.
1100 NEW YORK AVENUE, N.W.
WASHINGTON, DC 20005

Mail Date: 04/21/2010

Applicant	: Eyal Trachtman	: DECISION ON REQUEST FOR
Patent Number	: 7634268	: RECALCULATION of PATENT
Issue Date	: 12/15/2009	: TERM ADJUSTMENT IN VIEW
Appliction No	: 10/021,249	: OF WYETH AND NOTICE OF INTENT TO
Filed	: 12/19/2001	: ISSUE CERTIFICATE OF CORRECTION
		:

The Request for Recalculation is **GRANTED** to the extent indicated.

The patent term adjustment has been determined to be **2631** days. The USPTO will *sua sponte* issue a certificate of correction reflecting the amount of PTA days determined by the recalculation.

Prior to the issuance of the certificate of correction, the USPTO will afford patentee an opportunity to be heard and request reconsideration. Accordingly, patentee has **one month or thirty (30) days**, whichever is longer, to file a request for reconsideration of this patent term adjustment calculation. See 35 U.S.C. 154(b)(3)(B)(ii) and 37 CFR 1.322(a)(4). No extensions of time will be granted under 37 CFR 1.136.

Patentee should use document code PET.OP if electronically filing a request for reconsideration of this patent term adjustment calculation. The patentee must also include the information required by 37 CFR 1.705(b)(2) and the fee required by 37 CFR 1.18(e). If patentee does not file a timely request for reconsideration of this patent term adjustment calculation including the information required by 37 CFR 1.705(b)(2) and the fee required by 37 CFR 1.18(e), the USPTO will issue a certificate of correction reflecting the PTA determination noted above.

Patentee should be aware that in order to preserve the right to review in the United States District Court for the District of Columbia of the USPTO patent term adjustment determination, patentee must ensure that he or she also take the steps required under 35 U.S.C. 154(b)(4)(A) in a timely manner. Nothing in the request for recalculation should be construed as providing an alternative time frame for commencing a civil action under 35 U.S.C. 154(b)(4)(A).

Any questions concerning this decision should be directed to the Office of Patent Legal Administration at 571-272-7702.

UNITED STATES PATENT AND TRADEMARK OFFICE

Commissioner for Patents
United States Patent and Trademark Office
P.O. Box 1450
Alexandria, VA 22313-1450
www.uspto.gov

PAUL D. GREELEY
OHLANDT GREELEY RUGGIERO & PERLE, LLP
10TH FLOOR
ONE LANDMARK SQUARE
STAMFORD, CT 06901-2682

COPY MAILED
DEC 10 2008
OFFICE OF PETITIONS

In re Application of :
Jie Bian :
Application No. 10/021,253 : ON PETITION
Filed: December 13, 2001 :
Attorney Docket No. 384.7469USU :

This is a decision on the petition under 37 CFR 1.137(b), filed October 17, 2008, to revive the above-identified application.

The petition is **GRANTED**.

The above-identified application became abandoned for failure to reply in a timely manner to the non-final Office action mailed February 11, 2008, which set a shortened statutory period for reply of three (3) months. No extension of time under the provisions of 37 CFR 1.136(a) were obtained. Accordingly, the above-identified application became abandoned on June 19, 2008.

Telephone inquiries concerning this decision should be directed to Irvin Dingle at (571) 272-3210.

This matter is being referred to Technology Center AU 3694 for further processing.

Irvin Dingle
Petitions Examiner
Office of Petitions

UNITED STATES PATENT AND TRADEMARK OFFICE

COMMISSIONER FOR PATENTS
UNITED STATES PATENT AND TRADEMARK OFFICE
P.O. BOX 1450
ALEXANDRIA, VA 22313-1450
www.uspto.gov

Paper No.

SUN MICROSYSTEMS
C/O SONNENSCHEIN NATH & ROSENTHAL LLP
P.O. BOX 061080
WACKER DRIVE STATION, SEARS TOWER
CHICAGO IL 60606-1080

COPY MAILED

MAY 2 2 2008

OFFICE OF PETITIONS

In re Application of	:	
Driesner et al.	:	DECISION ON PETITION
Application No. 10/021,260	:	
Filed: December 19, 2001	:	
Atty Docket No. 30014200.1018	:	

This is a decision on the "PETITION TO WITHDRAW HOLDING OF ABANDONMENT" filed April 1, 2008.

The petition under 37 CFR 1.181 is **granted**.

The above-identified application became abandoned for failure to reply to the non-final Office action mailed June 15, 2007. This Office action set a three-month shortened statutory period for reply, with extensions of time obtainable under § 1.136(a). No reply considered received and no extension considered obtained, the above-identified application became abandoned on September 16, 2007. A Notice of Abandonment was mailed on February 28, 2008.

In response, applicant timely filed the instant petition. Applicant states that in response to the non-final Office action an amendment, with an executed certificate of mailing signed by attorney Christopher Rauch and dated (Monday) December 17, 2007, was timely filed. In support thereof, applicant submits *inter alia* a copy of the response as filed. Further, the petition is made by the attorney who signed the certificate of mailing under § 1.8.

Applicant shows that accompanying the response was a transmittal identifying the items being transmitted including an amendment, a money order for $1,050 for the extension of time and an authorization to charge a Deposit Account any required fees. The transmittal included a certificate of mailing dated (Monday) December 17, 2007. The transmittal with the certificate of mailing states applicant petitions for extension of time for response until December 15, 2007 (Saturday) was also enclosed.

37 CFR 1.8(b) provides that:

In the event that correspondence is considered timely filed by being mailed or transmitted in accordance with paragraph (a) of this section, but not received in the U.S. Patent and Trademark Office after a reasonable amount of time has elapsed from the time of mailing or transmitting of the correspondence, or after the application is held to be abandoned, or after the proceeding is dismissed, terminated, or decided with prejudice, the correspondence will be considered timely if the party who forwarded such correspondence:

> (1) Informs the Office of the previous mailing or transmission of the correspondence promptly after becoming aware that the Office has no evidence of receipt of the correspondence;
>
> (2) Supplies an additional copy of the previously mailed or transmitted correspondence and certificate; and
>
> (3) Includes a statement which attests on a personal knowledge basis or to the satisfaction of the Director to the previous timely mailing or transmission. If the correspondence was sent by facsimile transmission, a copy of the sending unit's report confirming transmission may be used to support this statement.

Neither the transmittal nor the response were received in the Office. On instant petition, petitioner has satisfied the requirements of 1.8(b) to have the response considered timely filed by virtue of the certificate of mailing dated (Monday) December 17, 2007.

Receipt of the extension of time fee resubmitted on instant petition is acknowledged.

Accordingly, the Notice of Abandonment mailed February 28, 2008 is hereby **VACATED**, and the holding of abandonment is hereby **WITHDRAWN**.

The petition under § 1.181 is **GRANTED**.

No fee is required on petition under § 1.181.

Technology Center AU 2194 has been advised of this decision. The application file is, thereby, forwarded to the Technology Center's technical staff to withdraw the holding of abandonment and for the examiner to consider the response resubmitted on petition filed April 1, 2008.

Telephone inquiries specific to this decision should be directed to the undersigned at (571) 272-3219.

Nancy Johnson
Senior Petitions Attorney
Office of Petitions

UNITED STATES PATENT AND TRADEMARK OFFICE

Commissioner for Patents
United States Patent and Trademark Office
P.O. Box 1450
Alexandria, VA 22313-1450
www.uspto.gov

JJGJR.: 02-06

Paper No: __

TOWNSEND AND
TOWNSEND AND CREW, LLP
TWO EMBARCADERO CENTER
EIGHTH FLOOR
SAN FRANCISCO CA 94111

COPY MAILED
FEB 13 2006
OFFICE OF PETITIONS

In re Application of :
Menashe :
Application No. 10/021,306 : DECISION
Filing Date: 29 October, 2001 :
Attorney Docket No.: 017900-002400US :

This is a decision on the petition filed on 14 December, 2005, alleging unintentional delay under 37 C.F.R. §1.137(b).

For the reasons set forth below, the petition under 37 C.F.R.§1.137(b) is **DISMISSED**.

NOTES:

(1) Any petition (and fee) for reconsideration of this decision under 37 C.F.R. §1.137(b)[1] (as to unintentional delay) must be submitted within two (2) months from the mail date of this decision. Extensions of time under 37 C.F.R. §1.136(a)

[1] Effective December 1, 1997, the provisions of 37 C.F.R. §1.137(b) now provide that where the delay in reply was unintentional, a petition may be filed to revive an abandoned application or a lapsed patent pursuant to 37 C.F.R. §1.137(b). a grantable petition filed under the provisions of 37 C.F.R. §1.137(b) must be accompanied by:
(1) the required reply, unless previously filed. In a nonprovisional application abandoned for failure to prosecute, the required reply may be met by the filing of a continuing application. In an application or patent, abandoned or lapsed for failure to pay the issue fee or any portion thereof, the required reply must be the payment of the issue fee or any outstanding balance thereof.
(2) the petition fee as set forth in 37 C.F.R. §1.17(m);
(3) a statement that the entire delay in filing the required reply from the due date for the reply until the filing of a grantable petition pursuant to 37 C.F.R. §1.137(b) was unintentional. The Commissioner may require additional information where there is a question whether the delay was unintentional; and
(4) any terminal disclaimer (and fee set forth in 37 C.F.R. §1.20(d)) required pursuant to 37 C.F.R. §1.137(c). (Emphasis supplied.)

are permitted. The reconsideration request should include a cover letter entitled "Renewed Petition under 37 C.F.R. §1.137(b)."

(2) Thereafter, there will be no further reconsideration of this matter.

BACKGROUND

The record reflects that:

- Petitioner failed to reply timely and properly to the final Office action mailed on 20 May, 2005, with reply due absent extension of time on or before Monday, 22 August, 2005;
- Petitioner filed an after-final amendment (with a request and fee for extension of time) on 26 August, 2005, however, the Examiner found the reply not to be a proper reply to a final Office action[2] and has refused to enter the reply;
- the instant application went abandoned after midnight 22 September, 2005;
- it appears that the Office did not mail a Notice of Abandonment before the instant petition was filed;
- Petitioner has not filed with the instant petition a request for continued examination (RCE)–Petitioner is: (a) directed to the regulations at 37 C.F.R. §1.114, and (b) reminded of the fee and the submission requirements (e.g., an amendment or other paper advancing prosecution) under the regulation.

Thus, as of this writing, Petitioner has failed to satisfy the reply requirement of the regulation.

STATUTES, REGULATIONS AND ANALYSIS

Congress has authorized the Commissioner to "revive an application if the delay is shown to the satisfaction of the Commissioner to have been "unavoidable." 35 U.S.C. §133 (1994).[3]

---

[2] A proper reply is a an amendment *prima facie* placing the application in condition for allowance, a Notice of Appeal, or an RCE (with fee and submission). (See: MPEP §711.03(c).)

[3] 35 U.S.C. §133 provides:
35 U.S.C. §133 Time for prosecuting application.
Upon failure of the applicant to prosecute the application within six months after any action therein, of which notice has been given or mailed to the applicant, or within such shorter time, not less than thirty days, as fixed by the Commissioner in such action, the application shall be regarded as abandoned by the parties thereto, unless it be shown to the satisfaction of the Commissioner that such delay was unavoidable.

The regulations at 37 C.F.R. §1.137(a) and (b) set forth the requirements for a petitioner to revive a previously unavoidably or unintentionally, respectively, abandoned application under this congressional grant of authority. The language of 35 U.S.C. §133 and 37 C.F.R. §1.137(a) is clear, unambiguous, and without qualification: the delay in tendering the reply to the outstanding Office action, as well as filing the first petition seeking revival, must have been unavoidable for the reply now to be accepted on petition.[4]

Delays in responding properly raise the question whether delays are unavoidable.[5] Where there is a question whether the delay was unavoidable, Petitioners must meet the burden of establishing that the delay was unavoidable within the meaning of 35 U.S.C. §133 and 37 C.F.R. §1.137(a).[6] And the Petitioner must be diligent in attending to the matter.[7] Failure to do so does not constitute the care required under Pratt, and so cannot satisfy the test for diligence and due care.

(By contrast, unintentional delays are those that do not satisfy the very strict statutory and regulatory requirements of unavoidable delay, and also, by definition, are not intentional.[8]))

As to the Allegations
of Unintentional Delay

The requirements for a grantable petition under 37 C.F.R. §1.137(b) are the petition and fee, a statement/showing of unintentional delay, a proper reply, and–where appropriate--a terminal disclaimer and fee if the application was filed before 8 June, 1995.

Petitioner has failed to satisfy the "reply" requirement under the regulation.

CONCLUSION

The petition under 37 C.F.R. §1.137(b) hereby is **dismissed**.

---

[4] Therefore, by example, an unavoidable delay in the payment of the Filing Fee might occur if a reply is shipped by the US Postal Service, but due to catastrophic accident, the delivery is not made.

[5] See: *Changes to Patent Practice and Procedure; Final Rule Notice*, 62 *Fed. Reg.* at 53158-59 (October 10, 1997), 1203 *Off. Gaz. Pat. Office* at 86-87 (October 21, 1997).

[6] See: In re Application of G, 11 USPQ2d 1378, 1380 (Comm'r Pats. 1989).

[7] See: Diligence in Filing Petitions to Revive and Petitions to Withdraw the Holding of Abandonment, 1124 Off. Gaz. Pat. Office 33 (March 19, 1991). It was and is Petitioner's burden to exercise diligence in seeking either to have the holding of abandonment withdrawn or the application revived. See 1124 Off. Gaz. Pat. Office supra.

[8] Therefore, by example, an unintentional delay in the reply might occur if the reply and transmittal form are to be prepared for shipment by the US Postal Service, but other pressing matters distract one's attention and the mail is not timely deposited for shipment.

Further correspondence with respect to this matter should be addressed as follows:[9]

By mail: Commissioner for Patents[10]
P.O. Box 1450
Alexandria, VA 22313-1450

By FAX: IFW Formal Filings
(571) 273-8300
ATTN.: Office of Petitions

By hand: Mail Stop: Petition
Customer Service Window
Randolph Building
401 Dulany Street
Alexandria, VA 22314

Telephone inquiries concerning this decision may be directed to the undersigned at (571) 272-3214.

John J. Gillon, Jr.
Senior Attorney
Office of Petitions

[9] On July 15, 2005, the Central Facsimile (FAX) Number will change from (703) 872-9306 to (571) 273-8300. Faxes sent to the old number will be routed to the new number until September 15, 2005. After September 15, 2005, the old number will no longer be in service and (571) 273-8300 will be the only facsimile number recognized for centralized delivery. (For further information. see: http://www.uspto.gov/web/offices/pac/dapp/opla/preognotice/cfax062005.pdf .)

[10] To determine the appropriate addresses for other subject-specific correspondence, refer to the USPTO Web site at www.uspto.gov.

UNITED STATES PATENT AND TRADEMARK OFFICE

Commissioner for Patents
United States Patent and Trademark Office
P.O. Box 1450
Alexandria, VA 22313-1450
www.uspto.gov

JJGJR.: 03-06

Paper No: __

TOWNSEND AND
TOWNSEND AND CREW, LLP
TWO EMBARCADERO CENTER
EIGHTH FLOOR
SAN FRANCISCO CA 94111

COPY MAILED

MAR 3 1 2006

OFFICE OF PETITIONS

DECISION

In re Application of :
Menashe :
Application No. 10/021,306 :
Filing Date: 29 October, 2001 :
Attorney Docket No.: 017900-002400US :

This is a decision on the petition filed on 21 February, 2006, alleging unintentional delay under 37 C.F.R. §1.137(b).

For the reasons set forth below, the petition under 37 C.F.R.§1.137(b) is **GRANTED**.

BACKGROUND

The record reflects that:

- Petitioner failed to reply timely and properly to the final Office action mailed on 20 May, 2005, with reply due absent extension of time on or before Monday, 22 August, 2005;

- Petitioner filed an after-final amendment (with a request and fee for extension of time) on 26 August, 2005, however, the Examiner found the reply not to be a proper reply to a final Office action[1] and has refused to enter the reply;

[1] A proper reply is a an amendment *prima facie* placing the application in condition for allowance, a Notice of Appeal, or an RCE (with fee and submission). (See: MPEP §711.03(c).)

- the instant application went abandoned after midnight 22 September, 2005;
- it appears that the Office did not mail a Notice of Abandonment before the instant petition was filed;
- because Petitioner did not file with the original a request for continued examination (RCE), Petitioner was: (a) directed to the regulations at 37 C.F.R. §1.114, and (b) reminded of the fee and the submission requirements (e.g., an amendment or other paper advancing prosecution) under the regulation, and the petition was dismissed on 13 February, 2006;
- Petitioner appears to have corrected that deficiency with the instant petition.

STATUTES, REGULATIONS AND ANALYSIS

Congress has authorized the Commissioner to "revive an application if the delay is shown to the satisfaction of the Commissioner to have been "unavoidable." 35 U.S.C. §133 (1994).[2]

The regulations at 37 C.F.R. §1.137(a) and (b) set forth the requirements for a petitioner to revive a previously unavoidably or unintentionally, respectively, abandoned application under this congressional grant of authority. The language of 35 U.S.C. §133 and 37 C.F.R. §1.137(a) is clear, unambiguous, and without qualification: the delay in tendering the reply to the outstanding Office action, as well as filing the first petition seeking revival, must have been unavoidable for the reply now to be accepted on petition.[3]

Delays in responding properly raise the question whether delays are unavoidable.[4] Where there is a question whether the delay was unavoidable, Petitioners must meet the burden of establishing that the delay was unavoidable within the meaning of 35 U.S.C. §133 and 37 C.F.R. §1.137(a).[5]

---

[2] 35 U.S.C. §133 provides:
35 U.S.C. §133 Time for prosecuting application.
Upon failure of the applicant to prosecute the application within six months after any action therein, of which notice has been given or mailed to the applicant, or within such shorter time, not less than thirty days, as fixed by the Commissioner in such action, the application shall be regarded as abandoned by the parties thereto, unless it be shown to the satisfaction of the Commissioner that such delay was unavoidable.

[3] Therefore, by example, an unavoidable delay in the payment of the Filing Fee might occur if a reply is shipped by the US Postal Service, but due to catastrophic accident, the delivery is not made.

[4] See: *Changes to Patent Practice and Procedure; Final Rule Notice*, 62 *Fed. Reg.* at 53158-59 (October 10, 1997), 1203 *Off. Gaz. Pat. Office* at 86-87 (October 21, 1997).

[5] See: In re Application of G, 11 USPQ2d 1378, 1380 (Comm'r Pats. 1989).

And the Petitioner must be diligent in attending to the matter.[6] Failure to do so does not constitute the care required under Pratt, and so cannot satisfy the test for diligence and due care.

(By contrast, unintentional delays are those that do not satisfy the very strict statutory and regulatory requirements of unavoidable delay, and also, by definition, are not intentional.[7]))

As to the Allegations
of Unintentional Delay

The requirements for a grantable petition under 37 C.F.R. §1.137(b) are the petition and fee, a statement/showing of unintentional delay, a proper reply, and–where appropriate--a terminal disclaimer and fee if the application was filed before 8 June, 1995.

Petitioner has satisfied the requirements under the regulation.

CONCLUSION

The petition under 37 C.F.R. §1.137(b) hereby is **granted**.

The instant application is released to Technology Center 2100 for further processing in due course.

Telephone inquiries concerning this decision may be directed to the undersigned at (571) 272-3214.

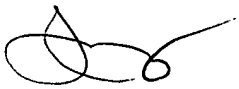

John J. Gillon, Jr.
Senior Attorney
Office of Petitions

---

[6] See: Diligence in Filing Petitions to Revive and Petitions to Withdraw the Holding of Abandonment, 1124 Off. Gaz. Pat. Office 33 (March 19, 1991). It was and is Petitioner's burden to exercise diligence in seeking either to have the holding of abandonment withdrawn or the application revived. See 1124 Off. Gaz. Pat. Office supra.

[7] Therefore, by example, an unintentional delay in the reply might occur if the reply and transmittal form are to be prepared for shipment by the US Postal Service, but other pressing matters distract one's attention and the mail is not timely deposited for shipment.

UNITED STATES PATENT AND TRADEMARK OFFICE

Commissioner for Patents
United States Patent and Trademark Office
P.O. Box 1450
Alexandria, VA 22313-1450
www.uspto.gov

TEXAS INSTRUMENTS INCORPORATED
P O BOX 655474, M/S 3999
DALLAS TX 75265

COPY MAILED

JUN 10 2008

In re Application of	:	
Bernd SCHEFFLER	:	
Application No. 10/021,360	:	DECISION ON PETITION
Filed: October 30, 2001	:	
Attorney Docket No. TI-31106	:	

This is a decision on the petition under the unintentional provisions of 37 CFR 1.137(b), filed March 28, 2008, to revive the above-identified application.

The petition is **GRANTED**.

The above-identified application became abandoned for failure to reply in a timely manner to the Notice to File Corrected Application Papers mailed November 08, 2007. The Notice set a period for reply of two (2) months from the mail date of the Notice. No extensions of time under the provisions of 37 CFR 1.136(a) were obtained. Accordingly, the application became abandoned on January 09, 2007.

The petition satisfies the conditions for revival pursuant to the provisions of 37 CFR 1.137(b) in that (1) the reply in the form of replacement formal drawings; (2) the petition fee of $1540.00; and (3) the required statement of unintentional delay have been received. Accordingly, the reply to the Notice to File Corrected Application Papers of November 08, 2007 is accepted as having been unintentionally delayed.

It is not apparent whether the person signing the statement of unintentional delay was in a position to have firsthand or direct knowledge of the facts and circumstances of the delay at issue. Nevertheless, such statement is being treated as having been made as the result of a reasonable inquiry into the facts and circumstances of such delay. See 37 CFR 10.18(b) and Changes to Patent Practice and Procedure; Final Rule Notice, 62 Fed. Reg. 53131, 53178 (October 10, 1997), 1203 Off. Gaz. Pat. Office 63, 103 (October 21, 1997). In the event that such an inquiry has not been made, petitioner must make such an inquiry. If such inquiry results in the discovery that it is not correct that the entire delay in filing the required reply from the due date for the reply until the filing of a grantable petition pursuant to 37 CFR 1.137(b) was unintentional, petitioner must notify the Office.

Telephone inquiries concerning this decision should be directed to the undersigned at (571) 272-4231.

The application is being referred to the Office of Data Management.

Michelle R. Eason
Paralegal Specialist
Office of Petitions

UNITED STATES PATENT AND TRADEMARK OFFICE

Commissioner for Patents
United States Patent and Trademark Office
P.O. Box 1450
Alexandria, VA 22313-1450
www.uspto.gov

Mailed: AUG 2 6 2004

BC
Paper Number:

In re application of
Herald Berger et al.
Serial No. 10/021,373
Filed: October 22, 2001
For: DEVICE FOR MELTING DOWN METAL CONTAINING MATERIALS

DECISION ON PETITION

This is a decision on the PETITION TO WITHDRAW THE HOLDING OF ABANDONMENT, filed April 28, 2004. Petitioner asserts that their office did not receive the Office action of October 1, 2003 and a search of the file and the docket entries was conducted to locate the Office action but no Office action was found. The Petitioner also attached a docket record for the above-identified application to show that the Office action was never received.

DECISION

A review of the petitioner's evidence provided with the instant Petition and the application record indicates that the request does not have merit. The October 1, 2003 Office action was mailed to the address of:
Pitney, Hardin, Kipp & Szuch LLP
711 Third Avenue
New York, NY 10017-4014.

However, it is clear from the application record that the attorney's correspondence address changed before the mailing of the Office action of October 1, 2003, as is evidenced by the address supplied in the Papers submitted on March 4, 2002. None of these Papers were directed to changing the correspondence address for the above-identified application.

As set forth in MPEP 711.03(c), "where an application becomes abandoned as a consequence of a change of correspondence address (the Office action being mailed to the old, uncorrected address and failing to reach the applicant in sufficient time to permit a timely reply) an adequate showing of "unavoidable" delay will require a showing that due care was taken to adhere to the requirement for prompt notification in each concerned application of the change of address (see MPEP § 601.03), and must include an adequate showing that a timely notification of the change of address was filed in the application concerned, and in a manner reasonably calculated to call attention to the fact that it was a notification of a change of address. The following do not constitute proper notification of a change in correspondence address:
(A) the mere inclusion, in a paper filed in an application for another purpose, of an address differing from the previously provided correspondence address, without mention of the fact that an address change was being made;
(B) the notification on a paper listing plural applications as being affected (except

as provided for under the Customer Number practice - see MPEP § 403); or
(C) the lack of notification, or belated notification, to the U.S. Patent and Trademark Office of the change in correspondence address."

In the instant case, the Petitioner failed to properly notify the USPTO of the change in correspondence address, which ultimately resulted in the non-receipt of the October 1, 2003 Office action. While the Petitioner did submit a proper change of correspondence address on April 16, 2004, this was after the statutory date for response to the October 1, 2003 Office action. Accordingly, this Petition cannot be granted.

The Petition is hereby **DENIED.**

Jacqueline Stone, Director
Technology Center 1700
Chemical and Materials Engineering

Pitney Hardin LLP
7 Times Square
New York, NY 10036-7311

UNITED STATES PATENT AND TRADEMARK OFFICE

Commissioner for Patents
United States Patent and Trademark Office
P.O. Box 1450
Alexandria, VA 22313-1450
www.uspto.gov

PITNEY HARDIN
7 TIMES SQUARE
NEW YORK, NY 10036-7311

COPY MAILED

OCT 13 2004

OFFICE OF PETITIONS

In re Application of	:	
Harald Berger et al	:	
Application No. 10/021,373	:	ON PETITION
Filed: October 22, 2001	:	
Attorney Docket No. 003015.098149	:	

This is a decision on the petition under 37 CFR 1.137(b), filed October 4, 2004, to revive the above-identified application.

The petition is **GRANTED**.

The above-identified application became abandoned for failure to reply in a timely manner to the non-final Office action mailed October 1, 2003, which set a shortened statutory period for reply of one (1) month. No extensions of time under the provisions of 37 CFR 1.136(a) were obtained. Accordingly, the above-identified application became abandoned on November 2, 2003.

37 CFR 1.137(b)(3) requires a statement that the entire delay in filing the required reply from the due date for the reply until the filing of a grantable petition pursuant to 37 CFR 1.137(b) was unintentional. If the statement contained in the instant petition varies from the language required by 37 CFR 1.137(b)(3), the statement contained in the instant petition is being construed as the statement required by 37 CFR 1.137(b)(3) and petitioner must notify the Office if this is **not** a correct interpretation of the statement contained in the instant petition.

Telephone inquiries concerning this decision should be directed to Wan Laymon at (571) 272-3220.

This matter is being referred to Technology Center AU 1742.

Wan Laymon
Petitions Examiner
Office of Petitions
Office of the Deputy Commissioner
for Patent Examination Policy

UNITED STATES PATENT AND TRADEMARK OFFICE

Commissioner for Patents
United States Patent and Trademark Office
P.O. Box 1450
Alexandria, VA 22313-1450
www.uspto.gov

COATS & BENNETT, PLLC
1400 Crescent Green, Suite 300
Cary NC 27518

COPY MAILED

APR 1 2 2007

OFFICE OF PETITIONS

In re Application of :
Tracy L. FULGHUM et al. :
Application No. 10/021,378 :
Filed: December 12, 2001 :
Attorney Docket No. 4015-1740 :

ON PETITION

This is a decision on the petition under 37 CFR 1.137(b), filed November 7, 2006, to revive the above-identified application.

The petition is **GRANTED**.

The above-identified application became abandoned for failure to submit the issue fee in a timely manner in reply to the Notice of Allowance mailed August 2, 2006, which set a statutory period for reply of three (3) months. Accordingly, by operation of law, the above-identified application became abandoned on November 3, 2006.

The petition satisfies the conditions for revival pursuant to the provisions of 37 CFR 1.137(b) in that (1) the reply in the form of payment of the Issue Fee; (2) the petition fee of $1500; and (3) the required statement of unintentional delay have been received. Accordingly, the Issue Fee payment is accepted as having been unintentionally delayed.

Telephone inquiries concerning this decision should be directed to the undersigned at (571) 272-7099.

The application file is being referred to the Office of Patent Publication.

David Bucci
Petitions Examiner
Office of Petitions

UNITED STATES PATENT AND TRADEMARK OFFICE

UNITED STATES DEPARTMENT OF COMMERCE
United States Patent and Trademark Office
Address: COMMISSIONER FOR PATENTS
P.O. Box 1450
Alexandria, Virginia 22313-1450
www.uspto.gov

APPLICATION NO.	FILING DATE	FIRST NAMED INVENTOR	ATTORNEY DOCKET NO.	CONFIRMATION NO.
10/021,392	12/12/2001	Brian K. Dewey	14917.415US01/MS164055.1	2633

27488 7590 12/26/2007
MERCHANT & GOULD (MICROSOFT)
P.O. BOX 2903
MINNEAPOLIS, MN 55402-0903

EXAMINER
TRUONG, CAM Y T

ART UNIT	PAPER NUMBER
2162	

MAIL DATE	DELIVERY MODE
12/26/2007	PAPER

Please find below and/or attached an Office communication concerning this application or proceeding.

The time period for reply, if any, is set in the attached communication.

UNITED STATES PATENT AND TRADEMARK OFFICE

COMMISSIONER FOR PATENTS
UNITED STATES PATENT AND TRADEMARK OFFICE
P.O. BOX 1450
ALEXANDRIA, VA 22313-1450
www.uspto.gov

MAILED

DEC 27 2007

TECHNOLOGY CENTER 2100

Gregory D. Leibold
Merchant & Gould (Microsoft)
P.O. Box 2903
Minneapolis, MN 55402-0903

In re Application of:
Brian DEWEY et al
Appl. No.: 10/021,392
Filed: December 12, 2001
For: SYSTEM AND METHOD FOR PROVIDING ACCESS TO CONSISTENT POINT-IN-TIME FILE VERSIONS

DECISION ON PETITION UNDER 37 CFR § 1.59

This is a decision on the petition under 37 CFR § 1.59(b), filed on 13 December 2007, to expunge information submitted pursuant to MPEP § 724.05.

The petition is **DISMISSED**.

Petitioner requests that the information submitted on 13 December 2007 be expunged from the record if found not to be important to a reasonable examiner in deciding whether to allow the application to issue as a patent. The petition fee set forth in 37 CFR § 1.17(g) has been paid.

The petition is premature because the application has not been allowed or abandoned. Accordingly, it is not appropriate to make a final determination of whether or not the material requested to be expunged is "material," with "materiality" being defined as any information which the examiner considers as being important to a determination of patentability of the claims. Thus, the petition to expunge must be dismissed at this time.

During prosecution on the merits, the examiner will determine whether or not the information submitted on 13 December 2007 is considered to be "material." Once prosecution on the merits is closed, applicant may re-submit a petition to expunge the information. No further fee is required for such a second submission of a petition under 37 CFR § 1.59 to expunge information. If the information is not considered by the examiner to be material, the information will be expunged from the application and may be returned to applicant.

Any inquiry concerning this decision should be directed to the undersigned whose telephone number is (571) 272-3613

Vincent N. Trans, SPRE/QAS
Technology Center 2100
Computer Architecture, Software, and
Information Security

UNITED STATES PATENT AND TRADEMARK OFFICE

UNITED STATES DEPARTMENT OF COMMERCE
United States Patent and Trademark Office
Address: COMMISSIONER FOR PATENTS
P.O. Box 1450
Alexandria, Virginia 22313-1450
www.uspto.gov

APPLICATION NO.	FILING DATE	FIRST NAMED INVENTOR	ATTORNEY DOCKET NO.	CONFIRMATION NO.
10/021,392	12/12/2001	Brian K. Dewey	14917.415US01/MS164055.1	2633

27488 7590 03/26/2009
MERCHANT & GOULD (MICROSOFT)
P.O. BOX 2903
MINNEAPOLIS, MN 55402-0903

EXAMINER
TRUONG, CAM Y T

ART UNIT	PAPER NUMBER
2169	

MAIL DATE	DELIVERY MODE
03/26/2009	PAPER

Please find below and/or attached an Office communication concerning this application or proceeding.

The time period for reply, if any, is set in the attached communication.

UNITED STATES PATENT AND TRADEMARK OFFICE

COMMISSIONER FOR PATENTS
UNITED STATES PATENT AND TRADEMARK OFFICE
P.O. BOX 1450
ALEXANDRIA, VA 22313-1450
www.uspto.gov

Rene A. Pereyra
MERCHANT & GOULD P.C.
P.O. Box 2903
Minneapolis, MN 55402-0903

In re Application of:
Brian K. Dewey et al
Appl. No.: 10/021,392
Filed: December 12, 2001
For: METHOD AND SYSTEM FOR PROVIDING ACCESS TO CONSISTENT POINT-IN-TIME VERSIONS

DECISION ON PETITION UNDER 37 CFR 1.59

This is a decision on the renewed petition under 37 CFR 1.59(b), filed on 23 February 2009, to expunge information submitted on 24 October 2006, 14 November 2007 and 13 December 2007.

The petition is **GRANTED**.

Petitioner requests that the information submitted on 14 November 2007 and 13 December 2007 and the two references entitled "Kerberos Protocol Extensions Specification" and "Microsoft FSCTL Structure Specification" submitted on 24 October 2006 be expunged from the record. Petitioner states that the information should be expunged from the record if found not to be important to a reasonable examiner in deciding whether to allow the application to issue as a patent. The petition fee set forth in 37 CFR § 1.17(g) has been paid.

Applicant is required to retain the expunged documents for the life of any patent, which issues on the above-identified application.

The expunged documents are herewith returned. However, the references entitled "Kerberos Protocol Extensions Specification" and "Microsoft FSCTL Structure Specification" have been closed from public view on the date of this decision and will not be returned.

Any inquiry concerning this decision should be directed to the undersigned whose telephone number is (571) 272-3613.

/Vincent N. Trans/
Vincent N. Trans, SPRE/QAS
Technology Center 2100
Computer Architecture and Software

Attachments: two (2) sealed envelopes.

UNITED STATES PATENT AND TRADEMARK OFFICE

COMMISSIONER FOR PATENTS
UNITED STATES PATENT AND TRADEMARK OFFICE
P.O. BOX 1450
ALEXANDRIA, VA 22313-1450
www.uspto.gov

See - 4360,677
4394,155 - copied 70 ex 3

Paper No. 9

DANIEL REITENBACH
CROMPTON CORPORATION
BENSON ROAD
MIDDLEBURY, CT 06749

COPY MAILED

NOV 2 5 2003

OFFICE OF PETITIONS

In re Application of
Lacadie et al.
Application No. 10/021,453
Filed: October 29, 2001
Attorney Docket No. 0104-CP

ON PETITION

This is a decision on the petition under 37 C.F.R. § 1.137(b), filed November 4, 2003, to revive the above-identified application.

The petition is **granted.**

The above-identified application became abandoned for failure to reply in a timely manner to the restriction requirement mailed March 26, 2003, which set a shortened statutory period for reply of one (1) month. No extensions of time under the provisions of 37 CFR 1.136(a) were obtained. Accordingly, the above-identified application became abandoned on April 27, 2003.

Petitioner has met the requirements to revive the above-identified application pursuant to 37 CFR 1.137(b).

37 CFR 1.137(b)(3) requires a statement that the entire delay in filing the required reply from the due date for the reply until the filing of a grantable petition pursuant to 37 CFR 1.137(b) was unintentional. If the statement contained in the instant petition varies from the language required by 37 CFR 1.137(b)(3), the statement contained in the instant petition is being construed as the statement required by 37 CFR 1.137(b)(3) and petitioner must notify the Office if this is **not** a correct interpretation of the statement contained in the instant petition.

An extension of time under 37 CFR 1.136 must be filed prior to the expiration of the maximum extendable period for reply. See In re Application of S., 8 USPQ2d 1630, 1631 (Comm'r Pats. 1988). Accordingly, since the $1480.00 extension of time fee submitted with the petition on November 4, 2003 was subsequent to the maximum extendable period for reply, this fee is unnecessary and will be credited to petitioner's deposit account as authorized.

The file is now being forwarded to Technology Center 1600 for further examination on the merits.

Telephone inquiries should be directed to Paralegal Liana Chase at (703) 306-0482.

Wan Laymon
Petitions Examiner
Office of Petitions
Office of the Deputy Commissioner
for Patent Examination Policy

UNITED STATES PATENT AND TRADEMARK OFFICE

COMMISSIONER FOR PATENTS
UNITED STATES PATENT AND TRADEMARK OFFICE
P.O. BOX 1450
ALEXANDRIA, VA 22313-1450
www.uspto.gov

JOHN S. PRATT, ESQ
KILPATRICK STOCKTON, LLP
1100 PEACHTREE STREET
SUITE 2800
ATLANTA GA 30309

MAILED

APR 16 2009

OFFICE OF PETITIONS

In re Application of	:	
ALIFFI et al.	:	
Application No. 10/021,468	:	ON APPLICATION FOR
Filed: October 29, 2001	:	PATENT TERM ADJUSTMENT
Atty Docket No. E0019/258247	:	

This is in response to the Communication Regarding Patent Term Adjustment (PTA) indicated in Notice of Allowance filed January 30, 2009. Applicant requests that the determination of patent term adjustment be corrected from 795 days to 1633 days. Applicant requests this correction on the basis that the Office will take in excess of three years to issue this patent and in light of the recent court decision in Wyeth v. Dudas, No. 07-1492 (D.D.C. September 30, 2008).

As the instant application for patent term adjustment requests reconsideration of the patent term adjustment as it relates to the Office's failure to issue the patent within three years of the filing date, a decision is being **held in abeyance** until after the actual patent date. Knowledge of the actual date the patent issues is required to calculate the amount, if any, of additional patent term patentee is entitled to for Office failure to issue the patent within three years. See 37 CFR 1.703(b). (This is true even in this instance where a request for continued examination (RCE) was filed. The computer will not undertake the § 1.703(b) calculation until the actual date of issuance of the patent has been determined. Accordingly, it is still too soon to make a determination as to the correctness

of any period of adjustment that will or will not be entered pursuant to § 1.703(b)).

Applicant is given **TWO (2) MONTHS** from the issue date of the patent to file a written request for reconsideration of the patent term adjustment for Office failure to issue the patent within three years. A copy of this decision should accompany the request. Applicant may seek such consideration without payment of an additional fee. However, as to all other bases for seeking reconsideration of the patent term adjustment indicated in the patent, all requirements of § 1.705(d) must be met. Requests for reconsideration on other bases must be timely filed and must include payment of the required fee.

Rather than file the request for reconsideration of Patent Term Adjustment at the time of the mailing of the notice of allowance, applicant is advised that they may wait until the time of the issuance of the patent and file a request for reconsideration of the patent term pursuant to 37 CFR 1.705(d). The USPTO notes that it does not calculate the amount of time earned pursuant to 37 CFR 1.702(b) until the time of the issuance of the patent and accordingly, the Office will consider any request for reconsideration of the patent term adjustment due to an error in the calculation of 37 CFR 1.702(b) to be timely if the request for reconsideration is filed within two months of the issuance of the patent.

It is acknowledged that applicant is correct that any period of adjustment will be entered in light of 35 U.S.C. 154(B) GUARANTEE OF NO MORE THAN 3-YEAR APPLICATION PENDENCY, which provides that:

> Subject to the limitations under paragraph (2), if the issue of an original patent is delayed due to the failure of the United States Patent and Trademark Office to issue a patent within 3 years after the actual filing date of the application in the United States, not including —
>
> (i) any time consumed by continued examination of the application requested by the applicant under section 132(b);

It is noted that a Request for Continued Examination (RCE) was filed in this application on January 4, 2007.

The Office acknowledges submission of the $200.00 fee set forth in 37 CFR 1.18(e). No additional fees are required.

The application is being forwarded to the Office of Data Management for issuance of the patent. The patent term adjustment indicated on the patent (as shown on the Issue Notification mailed about three weeks prior to patent issuance) will include any additional adjustment accrued both for Office delay in issuing the patent more than four months after payment of the issue fee and satisfaction of all outstanding requirements, and for the Office taking in excess of three years to issue the patent (to the extent that the three-year period does not overlap with periods already accorded).

Telephone inquiries specific to this decision should be directed to Senior Petitions Attorney, Christina Tartera Donnell, at (571) 272-3211.

Kery A. Fries
Senior Legal Advisor
Office Patent Legal Administration

UNITED STATES PATENT AND TRADEMARK OFFICE

Commissioner for Patents
United States Patent and Trademark Office
P.O. Box 1450
Alexandria, VA 22313-1450
www.uspto.gov

JOHN S. PRATT, ESQ
KILPATRICK STOCKTON, LLP
1100 PEACHTREE STREET
SUITE 2800
ATLANTA GA 30309

COPY MAILED
JUL 20 2009
OFFICE OF PETITIONS

In re Patent No. 7,536,346	:	
ALIFFI et al.	:	DECISION DISMISSING
Issue Date: May 19, 2009	:	REQUEST FOR
Application No. 10/021,468	:	RECONSIDERATION
Filed: October 29, 2001	:	OF PATENT TERM ADJUSTMENT
Atty. Docket No. E0019/258247	:	UNDER 37 CFR 1.705

This is in response to the "RENEWED REQUEST FOR RECONSIDERATION OF PATENT TERM ADJUSTMENT DETERMINATION" filed June 25, 2009, which is properly treated under 37 CFR 1.705(d). Patentees request that the determination of patent term adjustment be corrected from seven hundred ninety-five (795) days to one thousand six hundred thirty-three (1,633) days.

The request for reconsideration of patent term adjustment is **DISMISSED** with respect to making any change in the patent term adjustment determination under 35 U.S.C. 154(b) of 795 days.

BACKGROUND

This application was filed on October 29, 2001. On January 4, 2007, applicants filed the first request for continued examination (RCE) in the application. On October 30, 2008, the Office mailed a Determination of Patent Term Adjustment under 35 U.S.C. 154(b) in the above-identified application, stating that patent term adjustment to date was 795 days.[1] On May 19, 2009,

[1] 893 days of Office delay was reduced by 98 days of applicant delay for a patent term adjustment of 795 days. Applicants did not file a request for reconsideration of this initial determination seeking reinstatement of any part of the term **reduced pursuant to 37 CFR 1.704(a)**.

the application matured into U.S. Patent No. 7,536,346, with a revised patent term adjustment of 795 days.

On June 25, 2009, patentees timely submitted this request for reconsideration of patent term adjustment within two months of the issue date of the patent. See 37 CFR 1.705(d). Patentees contend:

> The determination of the total PTA of 795 days is erroneous because the United States Patent & Trademark Office failed to account for one additional Patent Office delay. The PTO delay periods should have their days added together in accordance with the reasoning in *Wyeth et al. v. Dudas,* No. 07-1492 (D.D.C. September 30, 2008). The number of PTA credits of 876 days for PTO delay under 35 U.S.C. § 154(b)(1)(A) and 37 C.F.R. § 1.702(a)(1) that is set forth on the enclosed PTA History (Exhibit A) is correct, however, it only accounts for one of the delays of the PTO. The other delay warrants an additional PTA credit of 797 days for PTO delay under 35 U.S.C. § 154(b)(1)(B) and 37 C.F.R. § 1.702(b). Because these two periods of delay do not overlap, Applicants are entitled to the sum of these two periods. Accordingly, a total PTA credit of 1673 days (i. e., 876 days + 797 days) is appropriate based upon the PTO delay. The total number of PTA debits of 40 days for applicant delay that is set forth on the enclosed PTA History (Exhibit A) is correct. Thus, the correct total PTA to date is 1633 days (i.e., 1673 days - 40 days).
>
> Thus, Applicants believe that the total PTA credit for PTO delay is 1673 days, the total PTA debit for applicant delay is 40 days, and the total PTA under § 1.703(f) is 1633 days.

Renewed Request dated 06/25/09, p. 2.

The Office agrees that as of the filing of the first RCE on January 4, 2007, the application was pending 3 years and 797 days after its filing date. However, the Office notes that 876 days[2] of patent term adjustment were accorded prior to the filing

[2] A nonfinal Office action was mailed on May 23, 2005, 14 months and 876 days after the application was filed on October 29, 2001.

of the RCE pursuant to 37 CFR 1.702(a)(1),[3] and 17 days[4] of Office delay occurred after the filing of the RCE pursuant to 37 CFR 1.702(a)(2).[5] Lastly, the Office disagrees with patentees' calculation of applicant delay as 40 days. Patentees were properly assessed a period of delay of 58 day, pursuant to 37 CFR 1.704(b), for failing to file a reply to the final Office action of March 18, 2008, until August 15, 2008, three months and 58 days later. Accordingly, the total period of applicant delay is 98 (10 + 30 + 58) days.

OPINION

Patentees' interpretation of the period of overlap has been considered, but has been found inconsistent with the Office's interpretation of the overlap provision, 35 U.S.C. 154(b)(2)(A).

---

[3] 37 CFR 1.702, provides grounds for adjustment of patent term due to examination delay under the Patent Term Guarantee Act of 1999 (original applications, other than designs, filed on or after May 29, 2000).

> (a) Failure to take certain actions within specified time frames. Subject to the provisions of 35 U.S.C. 154(b) and this subpart, the term of an original patent shall be adjusted if the issuance of the patent was delayed due to the failure of the Office to:
>
> (1) Mail at least one of a notification under 35 U.S.C. 132 or a notice of allowance under 35 U.S.C. 151 not later than fourteen months after the date on which the application was filed under 35 U.S.C. 111(a) or fulfilled the requirements of 35 U.S.C. 371 in an international application[.]

[4] The Office mailed a final Office action on March 18, 2008, 4 months and 17 days after the filing of the reply on November 1, 2007.

[5] 37 CFR 1.702, provides grounds for adjustment of patent term due to examination delay under the Patent Term Guarantee Act of 1999 (original applications, other than designs, filed on or after May 29, 2000).

> (a) Failure to take certain actions within specified time frames. Subject to the provisions of 35 U.S.C. 154(b) and this subpart, the term of an original patent shall be adjusted if the issuance of the patent was delayed due to the failure of the Office to:
>
> . . . .
>
> (2) Respond to a reply under 35 U.S.C. 132 or to an appeal taken under 35 U.S.C. 134 not later than four months after the date on which the reply was filed or the appeal was taken[.]

35 U.S.C. 154(b)(2)(A) limits the adjustment of patent term, as follows:

> to the extent that the periods of delay attributable to grounds specified in paragraph (1) overlap, the period of any adjustment granted under this subsection shall not exceed the actual number of days the issuance of the patent was delayed.

As explained in *Explanation of 37 CFR 1.703(f)*[6] *and of the United States Patent and Trademark Office Interpretation of 35 U.S.C. 154(b)(2)(A)*, 69 Fed. Reg. 34283 (June 21, 2004), the Office interprets 35 U.S.C. 154(b)(2)(A) as permitting either patent term adjustment under 35 U.S.C. 154(b)(1)(A)(i)-(iv), or patent term adjustment under 35 U.S.C. 154(b)(1)(B), but not as permitting patent term adjustment under both 35 U.S.C. 154(b)(1)(A)(i)-(iv) and 154(b)(1)(B). Accordingly, the Office implements the overlap provision as follows:

> If an application is entitled to an adjustment under 35 U.S.C. 154(b)(1)(B), the entire period during which the application was pending (except for periods excluded under 35 U.S.C. 154(b)(1)(B)(i)-(iii)), and not just the period beginning three years after the actual filing date of the application, is the period of delay under 35 U.S.C. 154(b)(1)(B) in determining whether periods of delay overlap under 35 U.S.C. 154(b)(2)(A). Thus, any days of delay for Office issuance of the patent more than 3 years after the filing date of the application, which overlap with the days of patent term adjustment accorded prior to the issuance of the patent will not result in any additional patent term adjustment. See 35 U.S.C. 154(b)(1)(B), 35 U.S.C. 154(b)(2)(A), and 37 CFR § 1.703(f). See *Changes to Implement Patent Term Adjustment Under Twenty Year Term; Final Rule*, 65 Fed. Reg. 54366 (Sept. 18, 2000). See also *Revision of Patent Term Extension and Patent Term Adjustment Provisions; Final*

---

[6] Likewise, 37 CFR 1.703(f) provides that:

> To the extent that periods of delay attributable to the grounds specified in § 1.702 overlap, the period of adjustment granted under this section shall not exceed the actual number of days the issuance of the patent was delayed.

Rule, 69 Fed. Reg. 21704 (April 22, 2004), 1282 Off. Gaz. Pat. Office 100 (May 18, 2004). See also *Explanation of 37 CFR 1.703(f) and of the United States Patent and Trademark Office Interpretation of 35 U.S.C. 154(b)(2)(A)*, 69 Fed. Reg. 34283 (June 21, 2004).

Further, as stated in the *Explanation of 37 CFR 1.703(f) and of the United States Patent and Trademark Office Interpretation of 35 U.S.C. 154(b)(2)(A)*, the Office has consistently taken the position that if an application is entitled to an adjustment under the three-year pendency provision of 35 U.S.C. 154(b)(1)(B), the entire period during which the application was pending before the Office (except for periods excluded under 35 U.S.C. 154(b)(1)(B)(i)-(iii)), and not just the period beginning three years after the actual filing date of the application, is the relevant period under 35 U.S.C. 154(b)(1)(B) in determining whether periods of delay "overlap" under 35 U.S.C. 154(b)(2)(A).

This interpretation is consistent with the statute. Taken together the statute and rule provide that to the extent that periods of delay attributable to grounds specified in 35 U.S.C. 154(b)(1) and in corresponding 37 CFR 1.702 overlap, the period of adjustment granted shall not exceed the actual number of days the issuance of the patent was delayed.

It is noted, however, that delays resulting in the Office's failure to meet the time frames specified in 35 U.S.C. 154(b)(1)(A) (the "fourteen-four-four-four" provisions) are not always overlapping with a delay resulting in the Office's failure to issue a patent within the three-year time frame specified in 35 U.S.C. 154(b)(1)(B) because not all application pendency time is counted toward this three-year period. See 35 U.S.C. 154(b)(1)(B)(i)-(iii).

In this instance, all application pendency time is not counted toward the three-year period. The first RCE was filed on January 4, 2007. The period subsequent to the filing of the RCE is not included in the three-year time frame specified in 35 U.S.C. 154(b)(1)(B). See 35 U.S.C. 154(b)(1)(B)(i). Thus, the relevant period under 35 U.S.C. 154(b)(1)(B) in determining whether periods of delay "overlap" under 35 U.S.C. 154(b)(2)(A) is the period from the filing of the application on October 29, 2001, to the filing of the first RCE on January 4, 2007. Thus, only the 876 days of patent term adjustment accorded prior to

the filing of the first RCE pursuant to 37 CFR 1.702(a)(1) are considered in determining overlap. The 17 days for Office delay under 37 CFR 1.702(a)(4), occurring after the filing of the first RCE is not considered. The 797 days attributed to Office delay pursuant to 37 CFR 1.702(b) for failure to issue the patent within three years after the filing of the application is determined to overlap with the 876 days attributed to Office delay pursuant to 37 CFR 1.702(a)(1). 893 (876 + 17) days is the actual number of days issuance of the patent was delayed. Accordingly, at issuance, the Office properly entered no additional period of adjustment, having considered the 797 days of Office delay under the three-year pendency provision.

CONCLUSION

In view thereof, the Office affirms the revised determination of patent term adjustment at the time of the issuance of the patent is 795 days ((893 (876 + 17) days of Office delay - 98 (10 + 30 + 58) days of applicant delay)).

The Office acknowledges the previous submission of the $200.00 fee set forth in 37 CFR 1.18(e) on January 30, 2009. No additional fees are required.

Telephone inquiries specific to this matter should be directed the undersigned at (571) 272-3211.

Christina Tartera Donnell

Christina Tartera Donnell
Senior Petitions Attorney
Office of Petitions

UNITED STATES PATENT AND TRADEMARK OFFICE

Commissioner for Patents
United States Patent and Trademark Office
P.O. Box 1450
Alexandria, VA 22313-1450
www.uspto.gov

JOHN S. PRATT, ESQ
KILPATRICK STOCKTON, LLP
1100 PEACHTREE STREET
SUITE 2800
ATLANTA GA 30309

MAILED
MAY 20 2010
OFFICE OF PETITIONS

In re Patent No. 7,536,346	:	
ALIFFI et al.	:	ON REQUEST FOR
Issue Date: May 19, 2009	:	RECONSIDERATION
Application No. 10/021,468	:	OF PATENT TERM ADJUSTMENT
Filed: October 29, 2001	:	UNDER 37 CFR 1.705(d)
Atty. Docket No. E0019/258247	:	

This is in response to the "REQUEST FOR RECONSIDERATION OF PATENT TERM ADJUSTMENT DETERMINATION" filed January 29, 2010.

The request for reconsideration of patent term adjustment is **DISMISSED as untimely**.

On May 19, 2009, the above-identified application matured into U.S. Patent No. 7,536,346, with a revised patent term adjustment of 795 days. On June 25, 2009, patentees timely submitted a request for reconsideration of patent term adjustment within two months of the issue date of the patent. See 37 CFR 1.705(d). On July 20, 2009, the Office mailed a decision dismissing the petition under 37 CFR 1.705(d).

Pursuant to 37 CFR 1.181(f), a request for reconsideration of the decision of July 20, 2009, dismissing the petition under 37 CFR 1.705(d) must have been filed within two months of the mailing date of that decision (i.e. on or before September 20, 2009). Extensions of time under 37 CFR 1.136 were not permitted. No request for reconsideration of the patent term adjustment was filed within two months of mailing date of the decision of July 20, 2009. Instead, patentees filed the present request for reconsideration of patent term adjustment on January 29, 2010, more than six months from the mailing date of the

decision of July 20, 2009. Patentees reference the decision in Wyeth v. Kappos, 591 F.3d 1364 (Fed. Cir. 2010) as the basis for the petition.

The fact that any relief ultimately granted in Wyeth may benefit patentees had they timely filed a request for reconsideration does not make the situation extraordinary. Wyeth followed the procedure set forth in 37 CFR 1.705 for requesting reconsideration of the patent term adjustment determination. Then, pursuant to 35 U.S.C. 154(b)(4)(A), Wyeth timely filed a complaint in District Court seeking judicial review of the Office's decision.

The fact that the Federal Circuit affirmed the order by the District Court for the District of Columbia granting summary judgment in favor of Wyeth does not make the situation extraordinary. This is not unlike any other situation where a patentee (or applicant) challenges a final agency decision and the decision upon judicial review could have had applicability to another patentee (or applicant) had they taken such action. The contention that a decision is in error is a basis for a timely request for review of the decision but does not justify a delay in seeking review of such decision. If patentees were dissatisfied with the decision dismissing the petition under 1.705(d), patentees should have filed a request for reconsideration of patent term adjustment within two months of the mailing date of that decision pursuant to 37 CFR 1.181(f). Moreover, patentees could have filed a civil action against the Director in the United States District Court for the District of Columbia within 180 days after the grant of the patent. See 35 USC 154(b)(4)(A).

Therefore, as patentees did not file the present request for reconsideration of patent term within two months of the mailing date of the decision dismissing the petition under 37 CFR 1.705(d), the request is properly **dismissed as untimely filed**.

Telephone inquiries specific to this matter should be directed the undersigned at (571) 272-3211.

C. T. Donnell

Christina Tartera Donnell
Senior Petitions Attorney
Office of Petitions

UNITED STATES PATENT AND TRADEMARK OFFICE

Commissioner for Patents
United States Patent and Trademark Office
P.O. Box 1450
Alexandria, VA 22313-1450
www.uspto.gov

OBLON, SPIVAK, MCCLELLAND MAIER & NEUSTADT, P.C.
1940 DUKE STREET
ALEXANDRIA VA 22314

COPY MAILED

JAN 0 7 2008

OFFICE OF PETITIONS

In re Application of

GINGRAS, Marie-Claude et al.
Application No. 10/021,509
Filed: December 07, 2001
Attorney Docket No. **278157US0**

DECISION ON PETITION TO WITHDRAW FROM RECORD

This is a decision on the Request to Withdraw as attorney or agent of record under 37 C.F.R. § 1.36(b), filed December 04, 2007 and re-submitted December 05, 2007.

The request is **APPROVED**.

A grantable request to withdraw as attorney/agent of record must be signed by every attorney/agent seeking to withdraw or contain a clear indication that one attorney is signing on behalf of another/others. A request to withdraw will not be approved unless at least 30 (thirty) days would remain between the date of approval and the later of the expiration date of a time to file a response or the expiration date of the maximum time period which can be extended under 37 C.F.R. § 1.136(a).

The request was signed by C. Irvin McClelland on behalf of all attorneys of record who are. All attorneys/agents associated have been withdrawn. Applicant is reminded that there is no attorney of record at this time.

All future correspondence will be directed to the first named inventor Marie-Claude Gringas at the address indicated below.

Telephone inquiries concerning this decision should be directed to Tredelle Jackson at 571-272-2783.

Monica A. Graves
Petitions Examiner
Office of Petitions

cc: **MARIE-CLAUDE GRINGAS**
8027 OAKINGTON DRIVE
HOUSTON, TX 77071

UNITED STATES PATENT AND TRADEMARK OFFICE

Commissioner for Patents
United States Patent and Trademark Office
P.O. Box 1450
Alexandria, VA 22313-1450
www.uspto.gov

COPY MAILED

OCT 01 2008

OFFICE OF PETITIONS

Marie-Claude Gingras
8027 Oakington Dr.
Houston, TX 77071

In re Application of
Gingras, et al.
Application No. 10/021,509
Filed: December 7, 2001

: CLARIFICATION OF
: POWER OF
: ATTORNEY
:

The instant application has been forwarded by the Board of Patent Appeals and Interferences to the Office of Patent Legal Administration for clarification of the power of attorney.

There is no current valid power of attorney of record. All previous filed attempts to convey a power of attorney or act as an assignee are accepted for the sole purpose of supporting previous correspondence to and from the Office.

The current correspondence address is that of the first named inventor, Marie-Claude Gingras. All future submissions must be signed by both inventors, unless based on an appropriate power of attorney of record, or the submitter is acting in a representative capacity.

BACKGROUND

1. The instant application was filed December 7, 2001. The transmittal paper that accompanied the application directed correspondence to the address associated with Customer Number 26271 and was signed by Melissa Acosta, an attorney at Fulbright & Jaworski, LLP. The application was published on September 12, 2002 as Application Publication US20020128444A1.

2. On February 22, 2002, a Notice to File Missing Parts was mailed which required, *inter alia*, a signed oath or declaration, pursuant to § 1.63.

3. On March 11, 2002, a response to the Notice to File Missing Parts was filed. An executed § 1.63 declaration was submitted naming as the inventors: Marie-Claude Gingras and Judith F. Margolin, and referred to the title of the invention as 'TREM-1 SPLICE VARIANT (Trem-1SV) AND OTHER NATURAL AND ARTIFICIAL TREM 1 SEQUENCE VARIANTS FOR USE IN MODIFYING IMMUNE/INFLAMMATORY RESPONSES." Form PTO/SB/81 (Power of Attorney or Authorization of Agent) accompanied the response and was signed by W.

Dalton Tomkin. Power of attorney was apparently to be given by assignee Baylor College of Medicine[1] to the practitioners associated with Customer Number 26271.[2]

4. On March 11, 2002, an Assignment Recordation Cover Sheet, $40 recordation fee, and an assignment document, apparently in support of the March 11, 2002 power of attorney were filed for recordation in the assignment data base but not in the application file. The assignment document identifies inventors Judith F. Margolin and Marie-Claude Gingras as the assignors and Baylor College of Medicine as the assignee. The assignment was executed on March 6, 2002 and identified the title of the invention being assigned as 'TREM-1 SPLICE VARIANT AND OTHER NATURAL AND ARTIFICIAL TREM 1 SEQUENCE VARIANTS FOR USE IN MODIFYING IMMUNE/INFLAMMATORY RESPONSES."[3]

5. On March 21, 2002, the Office recorded the assignment documents filed March 11, 2002, at Reel 012689, Frame 0272.

6. On July 17, 2006, an Assignment Recordation Cover Sheet, $40 recordation fee, and an assignment document were filed. The assignment document identifies inventors Judith F. Margolin and Marie-Claude Gingras as the assignors and GenePrint Corporation as the assignee. The Office recorded the assignment documents the same day at Reel 017950, Frame 0645.

7. On February 20, 2007, a "Power of Attorney and Correspondence Address Indication Form and Statement Under 37 CFR 3.73(b)," and a copy of the assignment document recorded on July 17, 2006 were filed.[4] Power of attorney was to be given to practitioners associated with Customer Number 22850, and was signed by the CEO of GenePrint Corporation, Eugene Roussel. The assignment to GenePrint Corporation was by the inventors, identified the application as 10/021,509 filed on December 2, 1001. The assignment was executed on March 1, 2006.[5]

8. On May 18, 2007, a Notice revoking power of attorney was mailed to the address associated with Customer Number 26271 (Fulbright & Jaworski, LLP), and a Notice of acceptance of power of attorney[6] was mailed to the address associated with Customer Number 22850 (Oblon, Spivak, McClelland, Maier, & Neustadt, P.C.).

---

[1] The name of the assignee was present in the signature box.

[2] The Power of Attorney was improper: (1) because 3.73(b) was not complied with. Although the box "I am the Assignee of record of the entire interest. See 37 CFR 3.71. *Statement under 37 CFR 3.73(b) is enclosed.* (Form PTO/SB/96)" was checked, the statement establishing the correct assignee was not received by the Office, and (2) the form that was received granting power of attorney from alleged assignee Baylor College of Medicine was signed by an individual who was not established as having the authority to act on behalf of the assignee (no statement of authorization or appropriate title were provided).

[3] The invention title in the assignment differs from the invention title in the § 1.63 by the absence of the parenthetical material.

[4] The documents were not properly indexed in the patent application Image File Wrapper and as a result were not recognized by the Office.

[5] On April 24, 2007, a copy of the February 20, 2007 paper was filed.

[6] Although the Office accepted the power of attorney, the document did not comply with 37 CFR 3.73(b)(1)(i) since it was not "accompanied by a statement affirming that the documentary evidence of the chain of title from the original owner to the assignee was or concurrently is being submitted for recordation pursuant to § 3.11."

9. On December 4, 2007, a "Petition for Attorney Withdrawal Under 37 CFR 1.36" was filed. The petition was signed by C. Irvin McClelland on behalf of all attorneys of record, namely, all the attorneys/agents associated with Customer Number 22850.[7] The Petition requested that all further correspondence be forwarded to the Assignee identified as GenePrint Corporation.

10. On December 31, 2007, a Notice Regarding Change of Power of Attorney was mailed. The Notice stated that the December 4, 2007 withdrawal of attorney had been accepted and the new correspondence address would be the "new address of record."

11. On December 31, 2007, Form PTO/SB/82 (Revocation of Power of Attorney With New Power of Attorney and Change of Correspondence Address) was filed. The form was signed by Eugene Roussel, CEO of GenePrint Corporation and attempted to: (1) appoint practitioners associated with the Customer Number 76171[8] based on the submission of a copy an assignment from the inventors,[9] and (2) change the correspondence address to that of Customer Number 76171.[10]

12. On January 7, 2008, a Decision on Petition to Withdraw From Record was mailed, notwithstanding the December 31, 2007 Notice (item 10). The Decision stated that the December 4, 2007 request to withdraw was approved and that all future correspondence would be directed to first-named inventor Marie-Claude Gingras as "there is no attorney of record at this time."

13. On January 15, 2008, the Office processed the PTO/SB/82 and changed the correspondence address to the address associated with Customer Number 76171.

14. On March 4, 2008, a Notice Regarding Power of Attorney was mailed to GenePrint Corporation. The Notice stated that the December 31, 2007 Power of Attorney was not accepted because the person appointed in the Power of Attorney is not registered to practice before the U.S. Patent and Trademark Office.[11]

15. On April 9, 2008, a Notice of Acceptance of Power of Attorney was mailed to GenePrint Corporation in reply to the December 31, 2007 Power of Attorney (item 11) notwithstanding the March 4, 2008 Notice not accepting the Power.

16. On April 29, 2008, an Assignment Recordation Cover Sheet, and a confirmatory license in compliance with Executive Order 9424were filed were filed in the assignment data base but not the application. The confirmatory license identifies Baylor College of Medicine as the assignor and the National Institutes of Health (NIH), U.S. Dept. of Health and Human Services (DHHS),

---

Such statement is required irrespective of the actual submission of the assignment for recording on July 17, 2006.

[7] On December 5, 2007 a copy of the December 4, 2007 petition was filed.

[8] The Power of Attorney was improper as there are no patent practitioners associated with Customer Number 76171.

[9] The assignment is discussed at item 6.

[10] A Customer Number may be used to set the correspondence address independent of appointment of a power of attorney. MPEP 403.

[11] The Power of Attorney was not compliant. See Footnote 6.

U.S. Government as the assignee. The Office recorded the assignment documents the same day at Reel 020869, Frame 0568.

17. A May 14, 2008 Petition for Rehearing of a March 31, 2008 Decision by the Board of Appeals and Patent Interferences affirming the examiner is pending.

Power of Attorney

In view of the multiple attempts to change the power of attorney and the technical defects of those attempts, and the multiple Office papers granting and denying power of attorney, clarification of the file record is appropriate.

The inventors have assigned their rights in the invention twice, once to Baylor College of Medicine and later to GenePrint. Baylor College of Medicine has executed a license to NIH.

Based on the assignment of rights by the inventors, power of attorney has attempted to be given to practitioners associated with Customer Numbers: 26,271 (Fulbright, & Jaworski, LLP), 22850 (Oblon, Spivak, McClelland, Maier & Nuestadt, P.C.), and 76171 (having no identified practitioners, but is apparently associated with the correspondence address of the CEO of GenePrint).

Based on the convoluted history of the power of attorney, the minor nature of power of attorney defects regarding regulatory requirements, the advanced stage of prosecution, and the lack of any contest regarding power of attorney in the record file, the Office will accept the previous filed powers of attorney and attempts to act as an assignee, but only so far as to support previous correspondence to and from the Office.

Accordingly, the instant Clarification, and a response to the rehearing request will be directed to the first named inventor. All future correspondence by the Office will also be directed towards the first named inventor unless a new compliant power of attorney is submitted. Consequently, any future reply by applicant must be signed by the two inventors, unless a new compliant power of attorney is submitted to support a reply by some other party, or a party is acting in a representative capacity.

Due to the convoluted history of the power of attorney and multiple assignments by the inventors, a courtesy copy of the instant clarification will also be mailed to prior parties seeking to establish a power of attorney, except for the practitioners associated with Customer Number 22850 (as they withdrew). Notwithstanding the lack of a power of attorney associated with Customer Number 76171, the Clarification will be sent to its associated address. The decision to the rehearing request will be sent to the current correspondence address, which is the first named inventor.

Parties seeking to submit a new power of attorney should understand that:

(1) The recording of an Assignment is merely an administrative act and does not represent a determination by the Office of the validity of the assignment or the effect of the document has on the title to an application or patent. MPEP 317.03.
(2) The Office will not resolve ownership disputes, which resolution are dependent upon state law and appropriate for resolution in a state court. MPEP 324, IX. Conflicting 37 CFR 3.73(b) Statements.

PROCESSING

1. The application will be returned to the Board of Patent Appeals and Interferences for processing after mailing of this decision.

2. Telephone inquiries related to the instant Clarification may be directed to the undersigned at (571) 272-7709 or Terry Dey, Technical Writer/Editor, Office of Patent Legal Administration, at (571) 272-7730.

Mark O. Polutta
Senior Legal Advisor
Office of Patent Legal Administration

Ccs: BAYLOR COLLEGE OF MEDICINE
OFFICE OF TECHNOLOGY ADMINISTRATION
ONE BAYLOR PLAZA BCMD 600D
HOUSTON, TX 77030

FULBRIGHT & JAWORSKI LLP
1301 MCKINLEY
SUITE 5100
HOUSTON, TX 77010-3095

EUGENE ROUSSEL AND BIOTHER CORPORATION AND
GENEPRINT CORPORATION
8027 OAKINGTON DRIVE
SUITE 100
HOUSTON TX 77071-2020

UNITED STATES PATENT AND TRADEMARK OFFICE

Commissioner for Patents
United States Patent and Trademark Office
P.O. Box 1450
Alexandria, VA 22313-1450
www.uspto.gov
DIW 08-04

DANIEL S. POLLEY, ESQ.
MALIN, HALEY & DIMAGGIO, P.A.
1936 SOUTH ANDREWS AVENUE
FORT LAUDERDALE FL 33316

COPY MAILED

AUG 2 6 2004

OFFICE OF PETITIONS

In re Patent No. 6,776,678	:
Issued: 17 August, 2004	:
Application No. 10/021,519	:DECISION GRANTING PETITION
Filed: 7 December, 2001	:
Attorney Docket No. 9297.6823	:

This is a decision on the petition filed on 2 August, 2004, under 37 CFR 1.182, which is treated as a petition to correct the inventor's name and accept the correction of the inventor's name on the front page of the above-identified patent.

The petition is **GRANTED**.

Although the present petition was filed on 2 August, 2004, the present patent issued on 17 August, 2004. Unfortunately the petition did not reach a deciding official prior to the issuance of the patent on 17 August, 2004.

The name of the inventor has been corrected in Office records. If a certificate of correction reflecting the change is desired, petitioners may request a Certificate of Correction in accordance with 37 CFR 1.323.

The file is being forwarded to Files Repository.

Telephone inquiries may be directed to the undersigned at 703-308-6918.

D Wood

Douglas I. Wood
Senior Petitions Attorney
Office of Petitions

UNITED STATES PATENT AND TRADEMARK OFFICE

COMMISSIONER FOR PATENTS
UNITED STATES PATENT AND TRADEMARK OFFICE
P.O. BOX 1450
ALEXANDRIA, VA 22313-1450
www.uspto.gov
DIW Sep-06

QUINE INTELLECTUAL PROPERTY LAW GROUP, P.C.
P O BOX 458
ALAMEDA CA 94501

COPY MAILED
SEP 25 2006
OFFICE OF PETITIONS

In re Application of	:	
Konowalchuk et al.	:	
Application No. 10/021,533	:	DECISION ON PETITION
Filed: 6 December, 2001	:	
Atty Docket No. 320-000120US	:	

This is a decision on the petition filed on 19 April, 2006, under 37 CFR 1.137(b),[1] to revive the above-identified application.

The petition is **GRANTED**.

The application became abandoned on 8 May, 2005, for failure to timely respond to the non-final Office action mailed on 7 February, 2005, which set a three (3) month shortened statutory period for reply. No extensions of time under 37 CFR 1.136(a) were obtained. Notice of Abandonment was mailed on 21 September, 2005.

---

[1] Effective December 1, 1997, the provisions of 37 CFR 1.137(b) now provide that where the delay in reply was unintentional, a petition may be filed to revive an abandoned application or a lapsed patent pursuant to 37 CFR 1.137(b). A grantable petition filed under the provisions of 37 CFR 1.137(b) must be accompanied by:

(1) the required reply, unless previously filed. In a nonprovisional application abandoned for failure to prosecute, the required reply may be met by the filing of a continuing application. In a nonprovisional utility or plant application filed on or after June 8, 1995, and abandoned for failure to prosecute, the required reply may also be met by the filing of a request for continuing examination in compliance with § 1.114. In an application or patent, abandoned or lapsed for failure to pay the issue fee or any portion thereof, the required reply must be the payment of the issue fee or any outstanding balance thereof. In an application, abandoned for failure to pay the publication fee, the required reply must include payment of the publication fee.

(2) the petition fee as set forth in 37 CFR 1.17(m);

(3) a statement that the entire delay in filing the required reply from the due date for the reply until the filing of a grantable petition pursuant to 37 CFR 1.137(b) was unintentional. The Commissioner may required additional information where there is a question whether the delay was unintentional; and

(4) any terminal disclaimer (and fee as set forth in 37 CFR 1.20(d)) required pursuant to 37 CFR 1.137(c)).

The petition fee will be charged to counsel's deposit account as authorized on Transmittal Form filed with the present petition.

This application is being referred to Technology Center Art Unit 1617 for further processing.

Telephone inquiries concerning this matter may be directed to the undersigned at (571) 272-3231.

D Wood

Douglas I. Wood
Senior Petitions Attorney
Office of Petitions

UNITED STATES PATENT AND TRADEMARK OFFICE

Commissioner for Patents
United States Patent and Trademark Office
P.O. Box 1450
Alexandria, VA 22313-1450
www.uspto.gov
DIW Sep-06

QUINE INTELLECTUAL PROPERTY LAW GROUP, P.C.
P O BOX 458
ALAMEDA CA 94501

COPY MAILED
SEP 28 2006
OFFICE OF PETITIONS

In re Application of	:	
Konowalchuk et al.	:	CORRECTED
Application No. 10/021,533	:	DECISION ON PETITION
Filed: 6 December, 2001	:	
Atty Docket No. 320-000120US	:	

This is a corrected decision on the petition filed on 19 April, 2006, under 37 CFR 1.137(b),[1] to revive the above-identified application.

The petition is **DISMISSED**.

Any request for reconsideration of this decision must be submitted within TWO (2) MONTHS from the mail date of this decision. Extensions of time under 37 CFR 1.136(a) are permitted. The reconsideration request should include a cover letter entitled "Renewed Petition Under 37 CFR 1.137(b)." This is not a final agency decision.

---

[1] Effective December 1, 1997, the provisions of 37 CFR 1.137(b) now provide that where the delay in reply was unintentional, a petition may be filed to revive an abandoned application or a lapsed patent pursuant to 37 CFR 1.137(b). A grantable petition filed under the provisions of 37 CFR 1.137(b) must be accompanied by:

(1) the required reply, unless previously filed. In a nonprovisional application abandoned for failure to prosecute, the required reply may be met by the filing of a continuing application. In a nonprovisional utility or plant application filed on or after June 8, 1995, and abandoned for failure to prosecute, the required reply may also be met by the filing of a request for continuing examination in compliance with § 1.114. In an application or patent, abandoned or lapsed for failure to pay the issue fee or any portion thereof, the required reply must be the payment of the issue fee or any outstanding balance thereof. In an application, abandoned for failure to pay the publication fee, the required reply must include payment of the publication fee.

(2) the petition fee as set forth in 37 CFR 1.17(m);

(3) a statement that the entire delay in filing the required reply from the due date for the reply until the filing of a grantable petition pursuant to 37 CFR 1.137(b) was unintentional. The Commissioner may required additional information where there is a question whether the delay was unintentional; and

(4) any terminal disclaimer (and fee as set forth in 37 CFR 1.20(d)) required pursuant to 37 CFR 1.137(c)).

The application became abandoned on 8 May, 2005, for failure to timely respond to the non-final Office action mailed on 7 February, 2005, which set a three (3) month shortened statutory period for reply. No extensions of time under 37 CFR 1.136(a) were obtained. Notice of Abandonment was mailed on 21 September, 2005.

The petition is dismissed because a proper authorization to charge the petition fee to counsel's deposit account has not been provided. No fee was included with the petition, and, upon further review, it was discovered that the attorney who signed the transmittal form, Tom Hunter, Reg. No. 38,498, is not listed as an authorized user of the deposit account provided on the transmittal form. As such, a proper authorization to charge the deposit account has not been provided, and the petition must be dismissed because the fee has not been paid.

In the absence of the petition fee, which is required by law, the USPTO can only treat the instant petition as a (feeless 1.181) petition to withdraw the holding of abandonment. As petitioner has not asserted any grounds for the withdrawal of the holding of abandonment, the petition must be dismissed.

The PTO will not reach the merits of any petition under 37 CFR 1.137 lacking the requisite petition fee.[2]

Further correspondence with respect to this matter should be addressed as follows:

By mail: Mail Stop Petition
Commissioner for Patents
P.O. Box 1450
Alexandria, VA 22313-1450

By FAX: (571)273-8300
Attn: Office of Petitions

By hand: Customer Service Window
Mail Stop Petition
Randolph Building
401 Dulany Street
Alexandria, VA 22314

---

[2] See Krahn v. Comm'r, 15 USPQ2d 1823, 1825 (E.D. Va. 1990).

Telephone inquiries should be directed to the undersigned at 571-272-3231.

Telephone inquiries concerning this matter may be directed to the undersigned at (571) 272-3231.

Douglas I. Wood
Senior Petitions Attorney
Office of Petitions

UNITED STATES PATENT AND TRADEMARK OFFICE

Commissioner for Patents
United States Patent and Trademark Office
P.O. Box 1450
Alexandria, VA 22313-1450
www.uspto.gov
DIW Jan-07

BEYER WEAVER LLP
P.O. BOX 70250
OAKLAND CA 94612-0250

COPY MAILED

JAN 19 2007

OFFICE OF PETITIONS

In re Application of	:	
Konowalchuk et al.	:	
Application No. 10/021,533	:	DECISION ON PETITION
Filed: 6 December, 2001	:	
Atty Docket No. 320-000120US	:	

This is a decision on the renewed petition filed on 31 October, 2006, under 37 CFR 1.137(b),[1] to revive the above-identified application.

The petition is **GRANTED**.

The application became abandoned on 8 May, 2005, for failure to timely respond to the non-final Office action mailed on 7 February, 2005, which set a three (3) month shortened statutory period for reply. No extensions of time under 37 CFR 1.136(a) were obtained. Notice of Abandonment was mailed on 21 September, 2005.

---

[1] Effective December 1, 1997, the provisions of 37 CFR 1.137(b) now provide that where the delay in reply was unintentional, a petition may be filed to revive an abandoned application or a lapsed patent pursuant to 37 CFR 1.137(b). A grantable petition filed under the provisions of 37 CFR 1.137(b) must be accompanied by:

(1) the required reply, unless previously filed. In a nonprovisional application abandoned for failure to prosecute, the required reply may be met by the filing of a continuing application. In a nonprovisional utility or plant application filed on or after June 8, 1995, and abandoned for failure to prosecute, the required reply may also be met by the filing of a request for continuing examination in compliance with § 1.114. In an application or patent, abandoned or lapsed for failure to pay the issue fee or any portion thereof, the required reply must be the payment of the issue fee or any outstanding balance thereof. In an application, abandoned for failure to pay the publication fee, the required reply must include payment of the publication fee.

(2) the petition fee as set forth in 37 CFR 1.17(m);

(3) a statement that the entire delay in filing the required reply from the due date for the reply until the filing of a grantable petition pursuant to 37 CFR 1.137(b) was unintentional. The Commissioner may required additional information where there is a question whether the delay was unintentional; and

(4) any terminal disclaimer (and fee as set forth in 37 CFR 1.20(d)) required pursuant to 37 CFR 1.137(c)).

The petition fee will be charged to counsel's deposit account as authorized in the present renewed petition.

This application is being referred to Technology Center Art Unit 1617 for further processing.

Telephone inquiries concerning this matter may be directed to the undersigned at (571) 272-3231.

D Wood

Douglas I. Wood
Senior Petitions Attorney
Office of Petitions

UNITED STATES PATENT AND TRADEMARK OFFICE

UNITED STATES DEPARTMENT OF COMMERCE
United States Patent and Trademark Office
Address: COMMISSIONER FOR PATENTS
P.O. Box 1450
Alexandria, Virginia 22313-1450
www.uspto.gov

APPLICATION NO.	FILING DATE	FIRST NAMED INVENTOR	ATTORNEY DOCKET NO.	CONFIRMATION NO.
10/021,598	12/12/2001	Shyh-Haur Su	0158/OK098	3481

7590 06/24/2005

DARBY & DARBY P.C.
805 Third Avenue
New York, NY 10022

EXAMINER
VO, ANH T N

ART UNIT	PAPER NUMBER
2861	

DATE MAILED: 06/24/2005

Please find below and/or attached an Office communication concerning this application or proceeding.

UNITED STATES PATENT AND TRADEMARK OFFICE

Commissioner for Patents
United States Patent and Trademark Office
P.O. Box 1450
Alexandria, VA 22313-1450
www.uspto.gov

Paper No. 62305

DARBY & DARBY P.C.
805 Third Avenue
New York, NY 10022

JUN 24 2005

In re Application of:	:	
SU *et al.*	:	NOTICE OF WITHDRAWAL
Serial No.: 10/021,598	:	FROM ISSUE
Filed: December 12, 2001	:	UNDER 37 CFR § 1.313
Attorney Docket No.: **0158/OK098**	:	

The purpose of this communication is to inform you that the above-identified application is being withdrawn from issue pursuant to 37 CFR § 1.313.

The above-identified application is hereby withdrawn from issue. The Notice of Allowance and Issue Fee Due and the Notice of Allowability mailed June 06, 2005, are hereby vacated.

The application is being withdrawn to permit reopening of prosecution. The reasons therefor will be communicated to you by the examiner in the next Office action.

Upon receipt of a new Notice of Allowance and Issue Fee Due, applicant may request that any previously submitted issue fee be applied toward payment of the issue fee in the amount identified on the new Notice of Allowance and Issue Fee Due. If the application is abandoned, applicant may request either a refund, or a credit to a Deposit Account.

Telephone inquires should be directed to David L. Talbott at (571) 272-1934.

The above-identified application is being forwarded to the examiner for prompt appropriate action.

Howard N. Goldberg, Director
Technology Center 2800
Semiconductors, Electrical and Optical
Systems and Components

Under the Paperwork Reduction Act of 1995, no persons are required to respond to a collection of information unless it displays valid OMB control number.

PETITION TO ACCEPT UNINTENTIONALLY DELAYED PAYMENT OF MAINTENANCE FEE IN AN EXPIRED PATENT (37 CFR 1.378(c))

Patent Number	Issue Date (YYYY-MM-DD)	Application Number	Filing Date (YYYY-MM-DD)	Docket Number (if applicable)
6,620,332	2003-09-16	10/021,616	2001-12-12	089019.21821

CAUTION: Maintenance fee (and surcharge, if any) payment must correctly identify: (1) the patent number and (2) the application number of the actual U.S. application leading to issuance of that patent to ensure the fee(s) is/are associated with the correct patent. 37 CFR 1.366(c) and (d).

SMALL ENTITY
☐ Patentee claims, or has previously claimed, small entity status. See 37 CFR 1.27.

LOSS OF ENTITLEMENT TO SMALL ENTITY STATUS
☐ Patentee is no longer entitled to small entity status. See 37 CFR 1.27(g)

NOT Small Entity		Small Entity	
Fee	Code	Fee	Code
◉ 3 ½ year	(1551)	○ 3 ½ year	(2551)
○ 7 ½ year	(1552)	○ 7 ½ year	(2552)
○ 11 ½ year	(1553)	○ 11 ½ year	(2553)

SURCHARGE
The surcharge required by 37 CFR 1.20(i)(2) (Fee Code 1558) must be paid as a condition of accepting unintentionally delayed payment of the maintenance fee.

MAINTENANCE FEE (37 CFR 1.20(e)-(g))
The appropriate maintenance fee must be submitted with this petition.

STATEMENT
THE UNDERSIGNED CERTIFIES THAT THE DELAY IN PAYMENT OF THE MAINTENANCE FEE TO THIS PATENT WAS UNINTENTIONAL

PETITIONER(S) REQUEST THAT THE DELAYED PAYMENT OF THE MAINTENANCE FEE BE ACCEPTED AND THE PATENT REINSTATED

THIS PORTION MUST BE COMPLETED BY THE SIGNATORY OR SIGNATORIES

37 CFR 1.378(d) states: "Any petition under this section must be signed by an attorney or agent registered to practice before the Patent and Trademark Office, or by the patentee, the assignee, or other party in interest."

I certify, in accordance with 37 CFR 1.4(d)(4) that I am

◉ An attorney or agent registered to practice before the Patent and Trademark Office

○ A sole patentee

○ A joint patentee; I certify that I am authorized to sign this submission on behalf of all the other patentees.

○ A joint patentee; all of whom are signing this e-petition

○ The assignee of record of the entire interest

Patent Practitioner			
A signature of the applicant or representative is required in accordance with 37 CFR 1.33 and 10.18. Please see 37 CFR 1.4(d) for the form of the signature			
Signature	/S. Sahota/	Date (YYYY-MM-DD)	2008-06-25
Name	S. Sahota	Registration Number	47051

This collection of information is required by 37 CFR 1.378(c). The information is required to obtain or retain a benefit by the public which is to file (and by the USPTO to process) an application. Confidentiality is governed by 35 U.S.C. 122 and 37 CFR 1.11 and 1.14. This collection is estimated to take 1 hour to complete, including gathering, preparing, and submitting the completed application form to the USPTO. Time will vary depending upon the individual case. Any comments on the amount of time you require to complete this form and/ or suggestions for reducing this burden, should be sent to the Chief Information Officer, U.S. Patent and Trademark Office, U.S. Department of Commerce, P.O. Box 1450, Alexandria, VA 22313-1450. DO NOT SEND FEES OR COMPLETED FORMS TO THIS ADDRESS. **This form can only be used when in conjunction with EFS-Web. If this form is mailed to the USPTO, it may cause delays in reinstating the patent.**

Privacy Act Statement

The Privacy Act of 1974 (P.L. 93-579) requires that you be given certain information in connection with your submission of the attached form related to a patent application or patent. Accordingly, pursuant to the requirements of the Act, please be advised that: (1) the general authority for the collection of this information is 35 U.S.C. 2(b)(2); (2) furnishing of the information solicited is voluntary; and (3) the principal purpose for which the information is used by the U.S. Patent and Trademark Office is to process and/or examine your submission related to a patent application or patent. If you do not furnish the requested information, the U.S. Patent and Trademark Office may not be able to process and/or examine your submission, which may result in termination of proceedings or abandonment of the application or expiration of the patent.

The information provided by you in this form will be subject to the following routine uses:

1. The information on this form will be treated confidentially to the extent allowed under the Freedom of Information Act (5 U.S.C. 552) and the Privacy Act (5 U.S.C. 552a). Records from this system of records may be disclosed to the Department of Justice to determine whether the Freedom of Information Act requires disclosure of these record s.

2. A record from this system of records may be disclosed, as a routine use, in the course of presenting evidence to a court, magistrate, or administrative tribunal, including disclosures to opposing counsel in the course of settlement negotiations.

3. A record in this system of records may be disclosed, as a routine use, to a Member of Congress submitting a request involving an individual, to whom the record pertains, when the individual has requested assistance from the Member with respect to the subject matter of the record.

4. A record in this system of records may be disclosed, as a routine use, to a contractor of the Agency having need for the information in order to perform a contract. Recipients of information shall be required to comply with the requirements of the Privacy Act of 1974, as amended, pursuant to 5 U.S.C. 552a(m).

5. A record related to an International Application filed under the Patent Cooperation Treaty in this system of records may be disclosed, as a routine use, to the International Bureau of the World Intellectual Property Organization, pursuant to the Patent Cooperation Treaty.

6. A record in this system of records may be disclosed, as a routine use, to another federal agency for purposes of National Security review (35 U.S.C. 181) and for review pursuant to the Atomic Energy Act (42 U.S.C. 218(c)).

7. A record from this system of records may be disclosed, as a routine use, to the Administrator, General Services, or his/her designee, during an inspection of records conducted by GSA as part of that agency's responsibility to recommend improvements in records management practices and programs, under authority of 44 U.S.C. 2904 and 2906. Such disclosure shall be made in accordance with the GSA regulations governing inspection of records for this purpose, and any other relevant (i.e., GSA or Commerce) directive. Such disclosure shall not be used to make determinations about individuals.

8. A record from this system of records may be disclosed, as a routine use, to the public after either publication of the application pursuant to 35 U.S.C. 122(b) or issuance of a patent pursuant to 35 U.S.C. 151. Further, a record may be disclosed, subject to the limitations of 37 CFR 1.14, as a routine use, to the public if the record was filed in an application which became abandoned or in which the proceedings were terminated and which application is referenced by either a published application, an application open to public inspections or an issued patent.

9. A record from this system of records may be disclosed, as a routine use, to a Federal, State, or local law enforcement agency, if the USPTO becomes aware of a violation or potential violation of law or regulation.

UNITED STATES PATENT AND TRADEMARK OFFICE

Commissioner for Patents
United States Patent and Trademark Office
P.O. Box 1450
Alexandria, VA 22313-1450
www.uspto.gov

In re Patent No. 6620332
Issue Date: September 16,2003
Application No. 10021616
Filed: December 12,2001
Attorney Docket No. TECO-2

:

:DECISION GRANTING PETITION
:UNDER 37 CFR 1.378(c)

:

This is a decision on the electronic petition, filed June 25,2008 ,under 37 CFR 1.378(c) to accept the unintentionally delayed payment of the 3.5 year maintenance fee for the above-identified patent.

The petition is GRANTED.

The maintenance fee is accepted, and the above-identified patent reinstated as of June 25,2008 . This decision also constitutes notice that the fee has been accepted. An electronic copy of the petition and this decision has been created as an entry in an Image File Wrapper. Nevertheless, petitioner should print and retain an independent copy

Telephone inquires related to this electronic decision should be directed to the Electronic Business Center at 1-866-217-9197.

UNITED STATES PATENT AND TRADEMARK OFFICE

COMMISSIONER FOR PATENTS
UNITED STATES PATENT AND TRADEMARK OFFICE
P.O. BOX 1450
ALEXANDRIA, VA 22313-1450
www.uspto.gov

Paper No. 13

QUARLES & BRADY LLP
411 E. WISCONSIN AVENUE, SUITE 2040
MILWAUKEE, WI 53202-4497

COPY MAILED
MAR 1 9 2004
OFFICE OF PETITIONS

In re Application of
Laeseke et al.
Application No. 10/021,622
Filed: December 12, 2001
Attorney Docket No. 960296.98636

ON PETITION

This is a decision on the petition under 37 C.F.R. § 1.137(b), filed March 1, 2004, to revive the above-identified application.

The petition is **granted.**

This application became abandoned for failure to properly reply within three months to the final Office action mailed July 16, 2003. No extensions of time under the provisions of 37 CFR 1.136(a) were obtained. Accordingly, this application became abandoned on October 17, 2003.

Petitioner has met the requirements to revive the above-identified application pursuant to 37 CFR 1.137(b).

The file is now being forwarded to Technology Center 3700 for processing of the Request for Continued Examination under 37 CFR 1.114 filed with the instant petition.

Telephone inquiries should be directed to the undersigned at (703) 306-0482.

Liana Chase
Petitions Examiner
Office of Petitions
Office of the Deputy Commissioner
for Patent Examination Policy

UNITED STATES PATENT AND TRADEMARK OFFICE

Commissioner for Patents
United States Patent and Trademark Office
P.O. Box 1450
Alexandria, VA 22313-1450
www.uspto.gov

KEVIN J. MORIARTY
PATENT DEPARTMENT
DEERE & COMPANY
ONE JOHN DEERE PLACE
MOLINE IL 61265-8098

COPY MAILED

AUG 24 2005

OFFICE OF PETITIONS

In re Application of Bradley John Meyer et al Application No. 10/021,642 Filed: December 18, 2001 Attorney Docket No. 15791-US	DECISION GRANTING PETITION UNDER 37 CFR 1.137(b)

This is a decision on the petition under 37 CFR 1.137(b), filed June 27, 2005, to revive the above-identified application.

The petition is **GRANTED**.

The petition satisfies the conditions for revival pursuant to the provisions of 37 CFR 1.137(b) in that (1) the reply in the form of an RCE and an amendment; (2) the petition fee; and (3) the required statement of unintentional delay have been received. Accordingly, the reply to the final Office action of July 14, 2004, is accepted as having been unintentionally delayed.

Telephone inquiries concerning this decision should be directed to the undersigned at (571) 272-3208.

This matter is being referred to Technology Center AU 3671.

Karen Creasy

Karen Creasy
Petitions Examiner
Office of Petitions
Office of the Deputy Commissioner
for Patent Examination Policy

UNITED STATES PATENT AND TRADEMARK OFFICE

COMMISSIONER FOR PATENTS
UNITED STATES PATENT AND TRADEMARK OFFICE
P.O. BOX 1450
ALEXANDRIA, VA 22313-1450

Paper No. 7

Larry Mason Lee
4408 Spicewood Springs Rd.
Austin, TX 78759

COPY MAILED
OCT 29 2003
OFFICE OF PETITIONS

In re Application of :
William C. Miller :
Application No. 10/021,649 : ON PETITION
Filed: December 19, 2001 :
Attorney Docket No. 01-09-01 :

This is a decision on the petition under 37 CFR 1.137(b), filed October 22, 2003, to revive the above-identified application.

The petition is granted.

The above-identified application became abandoned for failure to reply in a timely manner to the non-final Office action mailed November 20, 2002, which set a shortened statutory period for reply of three months from the mail date of the Notice. No extensions of time under the provisions of 37 CFR 1.136 have been obtained. Accordingly, the application became abandoned on February 21, 2003.

The application file is being forwarded to Technology Center AU 3727 for further processing.

Telephone inquiries concerning this decision should be directed to Latrice Bond at (703) 308-6911.

Latrice Bond

Latrice Bond
Paralegal Specialist
Office of Petitions
Office of the Deputy Commissioner
for Patent Examination Policy

#16
DW

UNITED STATES PATENT AND TRADEMARK OFFICE

MAY 14 2004

COMMISSIONER FOR PATENTS
UNITED STATES PATENT AND TRADEMARK OFFICE
P.O. BOX 1450
ALEXANDRIA, VA 22313-1450
www.uspto.gov

MAILED

MAY 14 2004

OFFICE OF THE DIRECTOR
TC 3600

Gary Johnson
2064 Lafayette
Detroit, MI 48207

In re Application of
Gary Johnson
Serial No: 10/021,656
Filed: December 12, 2001
For: JOHNSON-POSITIVE ACTION CONTINUOUS TRACTION (P.A.C.T.) VEHICLE DIFFERENTIAL

: DECISION ON PETITION
: UNDER 37 CFR 1.181

This is a decision on the Petitions under 37 CFR 1.181 filed April 1 and 5, 2004 for Supervisory Review of the final rejection mailed October 16, 2003.

The petition is **GRANTED** to the extent indicated below.

A review of the application file history reveals that a first Office action was mailed January 10, 2003 in which the examiner rejected claims 1-3 under 35 U.S.C. 112 and 35 U.S.C. 102. An amendment was received on February 25, 2003 in response to the Office action mailed January 10, 2003, which canceled claims 1-3 and added claims 4-6. Another Office action was mailed May 5, 2003 objecting to the drawings and rejecting claims 4-6 under 35 U.S.C. 112. A handwritten amendment was received July 31, 2003 in response to the May 5, 2003 Office action, which amended the drawings, added a new section to the specification, canceled claims 4-6 and added claims 7-8. A final rejection was mailed October 16, 2003 that: refused entry of the amended drawing based on new matter; refused entry of the changes to the specification as not complying with 37 CFR 1.125 because a statement was not included that the new specification did not include new matter and a marked up copy of the new specification was not included; refused entry of the amendment to the claims canceling claims 4-6 and adding claims 7-8 because the handwritten text was not double spaced and was hard to read; and again rejecting claims 4-6 under 35 U.S.C. 112. A Notice of Appeal was filed December 11, 2003 and an improper Appeal Brief was filed December 30, 2003. An amendment was received March 16, 2004 amending the drawings, adding a new section to the specification, providing a statement that the new section of the specification does not include new matter, canceling claims 4-6 and adding claims 7-8. An amendment was received April 12, 2004 which appears to be a duplicate of the March 16, 2004 amendment.

With regard to the October 16, 2003 final rejection, the examiner acted properly in refusing entry of the amendments to the drawings until the question of new matter is settled. See MPEP 714.19. The examiner erred in refusing to enter the added section (paragraphs) to the specification. The section applicant wishes added is not a substitute specification. Therefore the amendment to the specification does not fall under 37 CFR 1.125 and does not require a marked

up copy. It should fall under 37 CFR 1.121(b)(1). The examiner also erred in his handling of the July 31, 2003 amendment to the claims by refusing entry of the amendment to the claims, acting on the previously presented claims 4-6 and making his action final. Again, the amendment to the claims must also comply with 37 CFR 1.121(c). See MPEP 714.

The amendments to the specification and claims filed July 31, 2003 should have been refused entry on the basis of their being non-compliant with 37 CFR 1.121. No instruction was provided which unambiguously identifies the location to add the new section. Also, the request to delete the sentence from the "Detailed Description of the Drawing" is improper and should be done by deletion and replacement of the paragraph. See 37 CFR 1.121(b)(1). An amendment to the claims must include a complete listing of all claims in the application and the status of each claim indicated in a parenthetical expression after each claim number. See MPEP 714, III, 3. A Notice of Non-Compliant Amendment should have been sent to applicant setting a time limit of one month for reply during which time applicant would have the opportunity to correct the problems with his amendment under 37 CFR 1.121.

By the examiner not having a Notice of Non-compliant Amendment sent to applicant and directing the final Office action to claims 4-6, the final rejection mailed October 16, 2003 was improper. Therefore the October 16, 2003 final rejection is hereby vacated. Since the final rejection was improper, applicant should not have been forced to file a Notice of Appeal and its required fee. Therefore, the fee for the Notice of Appeal will be refunded to applicant.

This file will be forwarded to the Supervisory Legal Instruments Examiner to vacate the final rejection of October 16, 2003, refund the fee for the Notice of Appeal and provide applicant with a Notice of Non-compliant Amendment for the amendments applicant has filed July 31, 2003, March 18, 2004.

SUMMARY: The petition is **GRANTED** to the extent indicated.

Robert Oberleitner, Director
Patent Technology Center 3600
(703) 308-1134

pp:cm:5/13/04

UNITED STATES PATENT AND TRADEMARK OFFICE

MAR 30 2005

Commissioner for Patents
United States Patent and Trademark Office
P.O. Box 1450
Alexandria, VA 22313-1450
www.uspto.gov

MAILED

MAR 30 2005

OFFICE OF THE DIRECTOR
TC 3600

Gary C. Johnson
2064 Lafayette
Detroit, MI 48207

In re Application of : SUA SPONTE
Gary Johnson : WITHDRAWAL OF
Serial No: 10/021,656 : HOLDING OF
Filed: December 12, 2001 : ABANDONMENT
For: JOHNSON-POSITIVE ACTION CONTINUOUS :
TRACTION (P.A.C.T.) VEHICLE DIFFERENTIAL

A review of the above application reveals that a Decision on Petition under 37 CFR 1.181 was mailed May 14, 2004 vacating the final rejection of October 16, 2003, refunding the fee for the Notice of Appeal and directing that a Notice of Non-Compliant Amendment be mailed for the amendments filed July 31, 2003 and March 16, 2004. A Notice of Non-Compliant Amendment was mailed June 10, 2004. An amendment was filed June 30, 2004. A Failure to Acceptably Respond to Notice of Non-Compliant Amendment was mailed November 3, 2004 with no new time period for reply provided. Another amendment was filed November 12, 2004. Another Failure to Acceptably Respond to Notice of Non-Compliant Amendment was mailed December 3, 2004 with no new time period for reply provided.

Since the time period set in the June 10, 2004 Notice of Non-Compliant Amendment and all allowable extensions of time have passed without a proper response being filed, the application is technically abandoned. However, a review of the June 10, 2004 Notice of Non-Compliant Amendment shows that the May 14, 2004 Decision on Petition was not followed. The June 10, 2004 Notice only referred to the July 31, 2003 amendment and the March 16, 2004 amendment was never acted on as directed by the decision.

Therefore the June 10, 2004 Notice of Non-Compliant Amendment was improper and is hereby vacated. The application will be forwarded to the Supervisory Legal Instruments Examiner to vacate the Notice of Non-Compliant Amendment mailed June 10, 2004 and provide a complete Notice of Non-Compliant Amendment for the amendments applicant has filed July 31, 2003, March 16, 2004, June 30, 2004 and November 12, 2004.

Robert Oberleitner, Director
Patent Technology Center 3600
(703) 308-1134

UNITED STATES PATENT AND TRADEMARK OFFICE

Commissioner for Patents
United States Patent and Trademark Office
P.O. Box 1450
Alexandria, VA 22313-1450
www.uspto.gov

MAILED
FROM DIRECTOR'S OFFICE

OCT 06 2006

TECHNOLOGY CENTER 3600

GARY C. JOHNSON
2064 Lafayette
Detroit, MI 48207

In re Application of
Gary Carlton Johnson
Serial No: 10/021,656
Filed: December 12, 2001
For: JOHNSON-POSTIVE ACTION CONTINUOUS TRACTION (P.A.C.T.) VEHICLE DIFFERENTIAL

: DECISION ON PETITION
: TO WITHDRAW THE
: FINALITY OF OFFICE
: ACTION

This is a decision on the petition under 37 CFR 1.181 filed May 22, 2006 to revoke the final action mailed December 6, 2005 and the Advisory Action mailed March 22, 2006, and enter the amendment filed March 2, 2006.

The petition is **Granted-In-Part**.

A review of the application file history reveals that applicant filed an amendment May 23, 2005 in response to a Notice of Noncompliant Amendment mailed May 4, 2005. An Office action was mailed June 28, 2005 in which the examiner objected under 35 USC 132 to the amendment of May 23, 2005 as containing new matter and rejected the claims under 35 USC 112 second paragraph. Applicant filed an amendment July 21, 2005 amending the claims and providing arguments. A Notice of Non-Compliant Amendment was mailed August 4, 2005 and in response applicant filed an amendment August 15, 2005. An Office action was mailed October 24, 2005 in which the examiner again objected under 35 USC 132 to the amendment filed May 23, 2005 as containing new matter, objected to the specification under 37 CFR 1.75(d)(1) as failing to provide proper antecedent basis for claimed subject matter and rejected claims 15 and 16 under 35 USC 112 first paragraph. Applicant filed a response November 17, 2005 providing arguments concerning the October 24, 2005 Office action. On December 6, 2005 a final rejection Office action was mailed in which the examiner again objected under 35 USC 132 to the amendment filed May 23, 2005 as containing new matter, again objected to the specification under 37 CFR 1.75(d)(1) as failing to provide proper antecedent basis for claimed subject matter again rejected claims 15 and 16 under 35 USC 112 first paragraph and suggested an allowable claim for applicant to file. Applicant filed an amendment March 2, 2006. An Advisory Action was mailed March 22, 2006 refusing entry of the March 2, 2006 amendment because it raised new issues that would require further consideration and/or search, raised the issue of new matter and did not place the application in better form for appeal.

Under present practice, second or any subsequent actions on the merits shall be final, except where the examiner introduces a new ground of rejection that is neither necessitated by applicant's amendment of the claims nor based on information submitted in an information disclosure statement filed during the period set forth in 37 CFR 1.97 (c) with the fee set forth in 37 CFR 1.17(p). See MPEP 706.07(a). A review of the Office action of October 24, 2005 and the final rejection of December 6, 2005 shows that the examiner did not introduce a new ground of rejection in the final rejection. The rejections were the same as those set forth in the October 24, 2005 Office action. Therefore, making the December 6, 2005 Office action final was proper.

The examiner refused entry of the March 2, 2006 amendment after final because it raised new issues that would require further consideration and/or search, raised the issue of new matter and did not place the application in better form for appeal. The drawings filed March 2, 2006 still have the added support stock protruding from axial sides of the differential case that was objected to in the December 6, 2005 final rejection as new matter and still should not be entered. The amended sections of the specification that were submitted March 2, 2006 remove the new matter that the examiner objected to in those sections. Furthermore, applicant submitted a statement that the sections of the specification he was amending contained no new matter. MPEP 714.13 states "However, if the proposed amendment raises the issue of new matter, the examiner should identify the subject matter that would constitute new matter." The examiner did not identify in the March 22, 2006 Advisory Action what constituted new matter in the proposed amendments to the specification and applicant stated it contained no new matter. Therefore the proposed amendments to the specification should have been entered. The March 2, 2006 amendment canceled all previous claims and added two new claims 17 and 18. A review of claims 17 and 18 shows that they do not include the features pointed out as lacking support in the original application in the 35 USC 112 first paragraph rejection of the December 6, 2005 final rejection. MPEP 714.13 states "If the proposed amendment presents new issues requiring further consideration and/or search, the examiner should provide an explanation as to the reasons why the proposed amendment raises new issues that would require further consideration and/or search." The examiner stated in the March 22, 2006 Advisory Action that new claims 17 and 18 would require further consideration and search but did not provide an explanation as to the reasons. Since both the amendments to the specification and the new claims appear to eliminate the specific objections the examiner had with the specification and the previous claims and because the examiner provided no explanation of what the new matter issues are or why the amendment would require further consideration and search, the amendments to both the specification and claims appear to possibly avoid the objections and rejections set forth in the December 6, 2006 final rejection and place the case in better condition for appeal or allowance. Therefore the March 2, 2006 amendments to the specification and claims should have been entered.

The application will be promptly returned to the examiner for consideration of the amendment of March 2, 2006.

Telephone inquiries relative to this decision should be directed to Supervisory Patent Examiner Charles Marmor at (571) 272-7095.

SUMMARY: The petition is **GRANTED-IN-PART**. The December 6, 2006 final rejection will not be revoked. The replacement drawing of March 2, 2006 will not be entered. The amendments to the specification and claims filed March 2, 2006 will be entered.

John Love, Director
Patent Technology Center 3600
(571) 272-5250
pp:cm:9/29/06

UNITED STATES PATENT AND TRADEMARK OFFICE

Commissioner for Patents
United States Patent and Trademark Office
P.O. Box 1450
Alexandria, VA 22313-1450
www.uspto.gov

MAILED
FROM DIRECTOR'S OFFICE

DEC 14 2006

TECHNOLOGY CENTER 3600

GARY C. JOHNSON
2064 Lafayette
Detroit, MI 48207

In re Application of	:	DECISION ON PETITION
Gary Carlton Johnson	:	TO ENTER
Serial No: 10/021,656	:	REPLACEMENT
Filed: December 12, 2001	:	DRAWINGS
For: JOHNSON-POSTIVE ACTION CONTINUOUS	:	
TRACTION (P.A.C.T.) VEHICLE DIFFERENTIAL	:	

This is a decision on the petition under 37 CFR 1.181 filed October 31, 2006 to reconsider the petition decision mailed October 6, 2006 denying entry of the March 2, 2006 replacement drawing and to enter the March 2, 2006 replacement drawing.

The petition is **DENIED**.

A review of the application file history reveals that applicant filed proposed new drawings ON July 31, 2003. The Office action mailed October 16, 2003 disapproved of the proposed drawings because of the introduction of new matter. On November 12, 2004 applicant filed replacement drawings. The June 28, 2005 Office action refused entry of the November 12, 2004 replacement drawings because they included added support stock protruding from axial sides of the differential case. Applicant again filed replacement drawings March 2, 2006. An Advisory Action mailed March 22, 2006 refused entry of the March 2, 2006 drawings because they raised the issue of new matter as discussed in the December 6, 2005 Office action. The petition decision mailed October 6, 2006 denied entry of the March 2, 2006 replacement drawings.

Applicant argues that the concept of new matter applies toward amendments attempting to add new disclosure to the description or drawings for the purpose of directing a claim to said new disclosure. Applicant goes on to argue that no 35 U.S.C. 112 enablement rejection was made concerning the alleged new matter to the replacement drawing and therefore the alleged new matter is not a critical feature even to those who would not otherwise know what "bosses/boss" are. Applicant further states that it was an oversight that it was not included in his non-provisional drawing and references the drawing of his provisional application.

35 U.S.C. 132 states that no amendment shall introduce new matter into the disclosure of the invention. In establishing a disclosure, applicant may rely not only on the specification and drawing as filed but also on the original claims. See MPEP 608.04. A review of the March 2, 2006 replacement drawings shows support stock (bosses having orthogonal edges) protruding

from axial sides of the differential case. The original drawings show no such support stock or bosses. A review of the original specification and claims shows that there is no written description of the support stock or bosses. A comparison of the differentials shown in the drawings of applicant's provisional application no. 60/254,901 with the differential of the present invention shows completely different wall structure in the differential case. Although the provisional drawings show bosses, the bosses shown are tapered as opposed to the orthogonal edged bosses in the March 2, 2006 replacement drawings. Further, the walls in the provisional application show members 21, 22 fixed to their interior opposite the tapered bosses. The walls of the present differential have cutouts on their interior that receive what appear to be bearings and the ends of gear case 9 and bevel gear 12. It is clear that the support stock or bosses included in the March 2, 2006 replacement drawings are new to the disclosure of the present application and are, therefore, new matter. The examiner was correct in refusing entry of the March 2, 2006 drawings.

The application will be promptly returned to the examiner for consideration of the amendment of November 20, 2006.

Telephone inquiries relative to this decision should be directed to Supervisory Patent Examiner Charles Marmor at (571) 272-7095.

SUMMARY: The petition is **DENIED**. The replacement drawing of March 2, 2006 will not be entered.

Katherine Matecki

Katherine Matecki
Acting Director
Patent Technology Center 3600
(571) 272-5250

KM/cm:12/6/06

UNITED STATES PATENT AND TRADEMARK OFFICE

COMMISSIONER FOR PATENTS
UNITED STATES PATENT AND TRADEMARK OFFICE
WASHINGTON, D.C. 20231
www.uspto.gov

Paper No. 4

COPY MAILED

JUL 29 2002

OFFICE OF PETITIONS

WOOD, HERRON & EVANS, L.L.P.
2700 Carew Tower
Cincinnati, OH 45202

In re Application of
Dickey, et al.
Application No. 10/021,665
Filed: December 7, 2001
Docket No.: HILB / 723C1
For: PET CARE PRODUCTS AND METHOD OF PROVIDING PET CARE PRODUCTS, SERVICES AND INFORMATION

DECISION REFUSING STATUS UNDER 37 CFR 1.47(a)

This is in response to the petition under 37 CFR 1.47(a), filed July 15, 2002.

The petition is **DISMISSED**.

Rule 47 applicant is given TWO MONTHS from the mailing date of this decision to reply, correcting the below-noted deficiencies. Any reply should be entitled "Request for Reconsideration of Petition under 37 CFR 1.47(a)," and should only address the deficiencies noted below, except that the reply may include an oath or declaration executed by the non-signing inventor. Failure to respond will result in abandonment of the application. Any extensions of time will be governed by 37 CFR 1.136(a).

The above-identified application was filed December 7, 2001 without an executed oath or declaration and naming Bradley J. Dickey, Rodger A. Jones, Chris Lowery, and Darryl M. Maslar as joint inventors. Accordingly, on January 8, 2002, a "Notice to File Missing Parts of Nonprovisional Application" was mailed, requiring an executed oath or declaration and a surcharge.

A grantable petition under 37 CFR 1.47(a) requires: (1) proof that the non-signing inventor cannot be reached or refuses to sign the oath or declaration after having been presented with the application papers (specification, claims and drawings); (2) an acceptable oath or declaration in compliance with 35 USC 115 and 116; (3) the petition fee; and (4) a statement of the last known address of the non-signing inventor.

The petition lacks requirement (2) stated above. The instant petition is not accompanied by an oath or declaration executed by the available inventors on behalf of themselves and the non-signing inventor. Any renewed petition must be accompanied by an oath or declaration in full compliance with 37 CFR 1.63 and/or 37 CFR 1.64.

Further correspondence with respect to this matter should be addressed as follows:

By mail: Commissioner for Patents
Box DAC

Washington, DC 20231

By FAX: (703) 308-6916
Attn: Office of Petitions

By hand: Crystal Plaza Four, Suite 3C23
2201 S. Clark Place
Arlington, VA

Telephone inquiries related to this decision may be directed to the undersigned at (703) 305-0310.

Alesia M. Brown
Petitions Attorney
Office of Petitions
Office of the Deputy Commissioner
for Patent Examination Policy

UNITED STATES PATENT AND TRADEMARK OFFICE

COMMISSIONER FOR PATENTS
UNITED STATES PATENT AND TRADEMARK OFFICE
WASHINGTON, D.C. 20231
www.uspto.gov

Paper No. 9

COPY MAILED

SEP 0 9 2002

OFFICE OF PETITIONS

WOOD, HERRON & EVANS, L.L.P.
2700 Carew Tower
Cincinnati, OH 45202

In re Application of Dickey, et al. Application No. 10/021,665 Filed: December 7, 2001 Docket No.: HILB / 723C1 For: PET CARE PRODUCTS AND METHOD OF PROVIDING PET CARE PRODUCTS, SERVICES AND INFORMATION	DECISION NOTING JOINDER OF INVENTOR AND PETITION UNDER 37 CFR 1.47(b) MOOT

This is in response to the renewed petition under 37 CFR 1.47(a), filed July 15, 2002 and supplemented August 26, 2002.

In view of the joinder of the inventor, further consideration under 37 CFR 1.47(a) is not necessary and the petition is considered to be moot. This application does not have any Rule 1.47(a) status and no such status should appear on the file wrapper. This application need not be returned to this Office for further consideration under 37 CFR 1.47(a).

This application is being forwarded to the Office of Initial Patent Examination for further processing.

Telephone inquiries related to this decision may be directed to the undersigned at (703) 305-0310.

Alesia M. Brown
Petitions Attorney
Office of Petitions
Office of the Deputy Commissioner
for Patent Examination Policy

UNITED STATES PATENT AND TRADEMARK OFFICE

Commissioner for Patents
United States Patent and Trademark Office
P.O. Box 1450
Alexandria, VA 22313-1450
www.uspto.gov
DIW May-07

NAVAL SURFACE WARFARE CENTER DAHLGREN DIVISION
OFFICE OF COUNSEL, CODE XDC1
17632 DAHLGREN ROAD
SUITE 121
DAHLGREN VA 22448-5110

COPY MAILED

MAY 21 2007

OFFICE OF PETITIONS

In re Application of	:	
Lamoy et al.	:	DECISION ON PETITION
Application No. 10/021,682	:	TO WITHDRAW HOLDING OF
Filed: 30 November, 2001	:	ABANDONMENT
Atty. Docket No. NC 79363A	:	

This is a decision on the petition, filed on 18 January, 2005, to withdraw the holding of abandonment in the above-identified application.

The Office apologizes for the delay in responding to the present petition.

The application was held abandoned for failure to respond in a timely manner to the Board of Patent Appeals and Interferences Decision affirming the Examiner ("Board decision") mailed on 31 August, 2004, which set a two (2) month period for reply. Notice of Abandonment was mailed on 18 November, 2004.

Petitioners assert that a proper response was in fact timely filed in the form of a Request for Statutory Invention Registration (SIR). In support of the petition, petitioners have supplied a copy of the SIR Request, the transmittal letter accompanying the request, and a copy of a date-stamped post card receipt acknowledging receipt of the transmittal letter and SIR Request in the USPTO. The postcard bears an "Office-date" stamp of 1 November, 2004

The SIR request and transmittal letter of are not of record in the file and cannot be located. However, M.P.E.P. § 503 states, "[a] post card receipt which itemizes and properly identifies the papers which are being filed serves as *prima facie* evidence of receipt in the PTO of all the items listed thereon on the date stamped thereon by the PTO." Accordingly, it is concluded that

the SIR request and transmittal letter were received in the Office but was not matched with the application file.

The date-stamped on the post card of 1 November, 2004, is after the due date for the response. However, under 37 C.F.R. § 1.8(a)(1) correspondence is considered timely if: (1) the correspondence is mailed or transmitted prior to expiration of the set period for response by being properly addressed to the Patent and Trademark Office as set out in 37 C.F.R. § 1.1(a) and deposited with the U.S. Postal Service with sufficient postage as first class mail or transmitted to the Patent and Trademark Office in accordance with 37 C.F.R. § 1.6(d); and (2) the correspondence includes a certificate for each piece of correspondence stating the date of deposit or transmission. The person signing the certificate should have a reasonable basis to expect that the correspondence would be mailed or transmitted on or before the date indicated.

The transmittal letter filed with the present petition itemizes the filing of the SIR and bears a proper certificate of mailing, dated 28 October, 2004, in compliance with the requirements of 37 C.F.R. § 1.8(a)(1) as set forth above. Accordingly, the Notice of Abandonment is hereby vacated and the holding of abandonment withdrawn.

The petition is **GRANTED**.

The application will be forwarded to the Center's technical support staff for entry of the response. Thereafter the SIR request will be examined in due course.

Telephone inquiries concerning this matter may be directed to the undersigned at (571)272-3231.

DWood

Douglas I. Wood
Senior Petitions Attorney
Office of Petitions

UNITED STATES PATENT AND TRADEMARK OFFICE

COMMISSIONER FOR PATENTS
UNITED STATES PATENT AND TRADEMARK OFFICE
WASHINGTON, D.C. 20231
www.uspto.gov

Paper No. 12

MARK J. BUONAIUTO, ESQ.
BAXTER INTERNATIONAL INC.
LAW DEPARTMENT
ONE BAXTER PARKWAY, DF2-2E
DEERFIELD IL 60015

COPY MAILED

FEB 10 2003

OFFICE OF PETITIONS

In re Application of Kipp et al. Application No. 10/021,692 Filed: December 12, 2001 Attorney Docket No. F-6865	: : : : :	DECISION ON PETITION

This is a decision on the petition under 37 CFR 1.10(c), filed on December 26, 2002, requesting that the above-identified application be accorded a filing date of December 12, 2001, instead of the present filing date of May 30, 2002.

As previously stated in the Notice to File Missing Parts of Nonprovisional Application - Filing Date Granted (Notice) of February 11, 2002, the above-identified application had been accorded a filing date of December 12, 2001. Moreover, in support of the allegation, the present petition is accompanied by a copy of Express Mail label No. EL831512267US. The "date-in" indicated on the Express Mail label is December 12, 2001. The same Express Mail label number was placed on the original application papers located in the official file.

The record supports applicants' assertion that the United States Patent and Trademark Office erroneously changed the application filing date to May 30, 2002, the date of applicants' response to the Notice. The Office sincerely apologizes for the error.

Accordingly, the petition is granted.

The application is being forwarded to the Office of Initial Patent Examination for correction of the filing date to December 12, 2001, and the mailing of a corrected filing receipt.

Any inquiries related to this decision should be directed to the undersigned at (703) 306-5589.

Christina Tartera Donnell

Christina Tartera Donnell
Senior Petitions Attorney
Office of Petitions

UNITED STATES PATENT AND TRADEMARK OFFICE

Commissioner for Patents
United States Patent and Trademark Office
P.O. Box 1450
Alexandria, VA 22313-1450
www.uspto.go

EVAN J. FEDERMAN
ASSISTANT GENERAL/PATENT COUNSEL
WARNER-LAMBERT COMPANY
201 TABOR ROAD
MORRIS PLAINS, NJ 07950

COPY MAILED

AUG 0 5 2004

OFFICE OF PETITIONS

In re Application of	:	
Paquin et al.	:	
Application No. 10/021,735	:	ON PETITION
Filed: November 5, 2001	:	
Attorney Docket No. PC 32121	:	

This is a decision on the petition under 37 C.F.R. § 1.137(b), filed May 20, 2004, to revive the above-identified application.

The petition is **GRANTED.**

The above-identified application became abandoned for failure to submit the issue fee and publication fee in a timely manner in reply to the Notice of Allowance mailed February 17, 2004, which set a statutory period for reply of three (3) months. Accordingly, the above-identified application became abandoned on May 18, 2004.

Petitioner has met the requirements to revive the above-identified application pursuant to 37 CFR 1.137(b).

This matter is now being referred to the Publishing Division for processing into a patent.

Telephone inquiries should be directed to the undersigned at (703) 306-0482. Any telephone inquiries after approximately **September 24, 2004** should be directed to the undersigned at (571) 272-3282.

Liana Chase
Petitions Examiner
Office of Petitions
Office of the Deputy Commissioner
for Patent Examination Policy

UNITED STATES PATENT AND TRADEMARK OFFICE

Commissioner for Patents
United States Patent and Trademark Office
P.O. Box 1450
Alexandria, VA 22313-1450
www.uspto.gov

WOLF GREENFIELD & SACKS, P.C.
600 ATLANTIC AVENUE
BOSTON MA 02210-2206

COPY MAILED

JUL 29 2008

OFFICE OF PETITIONS

In re Application of :
CHIANG, et al. :
Application No. 10/021,740 : DECISION GRANTING PETITION
Filed: October 22, 2001 : UNDER 37 CFR 1.313(c)(2)
Attorney Docket No. **M00925/70108 TJO** :

This is a decision on the petition under 37 CFR 1.313(c)(2), filed July 28, 2008, to withdraw the above-identified application from issue after payment of the issue fee.

The petition is **GRANTED.**

The above-identified application is withdrawn from issue for consideration of a submission under 37 CFR 1.114 (request for continued examination). *See* 37 CFR 1.313(c)(2).

Petitioner is advised that the issue fee paid on March 3, 2008 cannot be refunded. If, however, this application is again allowed, petitioner may request that it be applied towards the issue fee required by the new Notice of Allowance.[1]

Telephone inquiries should be directed to the undersigned at (571) 272-7253.

This application is being referred to Technology Center AU 1795 for processing of the request for continued examination under 37 CFR 1.114 and for consideration of the concurrently filed information disclosure statement.

Monica A. Graves
Petitions Examiner
Office of Petitions

---

[1] *The request to apply the issue fee to the new Notice may be satisfied by completing and returning the new Part B – Fee(s) Transmittal Form (along with any balance due at the time of submission). Petitioner is advised that the Issue Fee Transmittal Form* ***must*** *be completed and timely submitted to avoid abandonment of the application.*

UNITED STATES PATENT AND TRADEMARK OFFICE

Commissioner for Patents
United States Patent and Trademark Office
P.O. Box 1450
Alexandria, VA 22313-1450
www.uspto.gov

WOLF GREENFIELD & SACKS, P.C.
600 ATLANTIC AVENUE
BOSTON, MA 02210-2206

MAILED

FEB 06 2009

OFFICE OF PETITIONS

In re Application of	:	
Yet-Ming **CHIANG, et al.**	:	
Application No. 10/021,740	:	DECISION GRANTING PETITION
Filed: October 22, 2001	:	UNDER 37 CFR 1.313(c)(2)
Attorney Docket No. M0925.70108US00	:	

This is a decision on the petition under 37 CFR 1.313(c)(2), filed February 2, 2009 to withdraw the above-identified application from issue after payment of the issue fee.

The petition is **GRANTED**.

The above-identified application is withdrawn from issue for consideration of a submission under 37 CFR 1.114 (request for continued examination). *See* 37 CFR 1.313(c)(2).

Petitioner is advised that the issue fee paid on November 26, 2008 cannot be refunded. If, however, this application is again allowed, petitioner may request that it be applied towards the issue fee required by the new Notice of Allowance.[1]

Telephone inquiries should be directed to the undersigned at (571) 272-7253.

This application is being referred to Technology Center AU 1795 for processing of the request for continued examination under 37 CFR 1.114 and for consideration of the concurrently filed information disclosure statement.

/Monica A. Graves/
Petitions Examiner, Office of Petitions

---

[1] *The request to apply the issue fee to the new Notice may be satisfied by completing and returning the new Part B – Fee(s) Transmittal Form (along with any balance due at the time of submission). Petitioner is advised that the Issue Fee Transmittal Form* ***must*** *be completed and timely submitted to avoid abandonment of the application.*

UNITED STATES PATENT AND TRADEMARK OFFICE

Commissioner for Patents
United States Patent and Trademark Office
P.O. Box 1450
Alexandria, VA 22313-1450
www.uspto.gov

WAYNE W. RUPERT
KLARQUIST SPARKMAN, LLP
ONE WORLD TRADE CENTER, SUITE 1600
121 S.W. SALMON STREET
PORTLAND, OREGON 97204

COPY MAILED

JUL 0 8 2004

OFFICE OF PETITIONS

In re Application of :
Matthew L. Babicki et al :
Application No. 10/021,751 :
Filed: December 11, 2001 :
Attorney Docket No. 6454-61583

NOTICE

This is a notice regarding your request for acceptance of a fee deficiency submission under 37 CFR 1.28. On September 1, 1998, the Court of Appeals for the Federal Circuit held that 37 CFR 1.28(c) is the sole provision governing the time for correction of the erroneous payment of the issue fee as a small entity. **See DH Technology v. Synergystex International, Inc. 154 F.3d 1333, 47 USPQ2d 1865 (Fed. Cir. Sept. 1, 1998).**

The Office no longer investigates or rejects original or reissue applications under 37 CFR 1.56. **1098 Off. Gaz. Pat. Office 502 (January 3, 1989).** Therefore, nothing in this Notice is intended to imply that an investigation was done.

Your fee deficiency submission under 37 CFR 1.28 is hereby **ACCEPTED**.

Inquiries related to this communication should be directed to the Office of Petitions Staff at (703) 305-9285.

This file is being forwarded to the Publishing Division.

Irvin Dingle
Petitions Examiner
Office of Petitions
Office of the Deputy Commissioner
for Patent Examination Policy

UNITED STATES PATENT AND TRADEMARK OFFICE

Commissioner for Patents
United States Patent and Trademark Office
P.O. Box 1450
Alexandria, VA 22313-1450
www.uspto.gov

KLARQUIST SPARKMAN LLP
121 SW SALMON STREET
SUITE 1600
PORTLAND, OR 97204

COPY MAILED

AUG 1 6 2004

OFFICE OF PETITIONS

In re Application of
Matthew L. Babicki et al
Application No. 10/021,751
Filed: December 11, 2001
Attorney Docket No. 6454-61583

DECISION GRANTING PETITION
UNDER 37 CFR 1.313(c)(2)

This is a decision on the petition, filed August 12, 2004, under 37 CFR 1.313(c)(2) to withdraw the above-identified application from issue after payment of the issue fee.

The petition is **GRANTED**.

The above-identified application is withdrawn from issue for consideration of a submission under 37 CFR 1.114 (request for continued examination). See 37 CFR 1.313(c)(2).

Petitioner is advised that the issue fee paid on June 18, 2004 in the above-identified application cannot be refunded. If, however, the above-identified application is again allowed, petitioner may request that it be applied towards the issue fee required by the new Notice of Allowance.[1]

Telephone inquiries should be directed to the undersigned at (703) 305-8680.

This matter is being referred to Technology Center AU 1724 for processing of the request for continued examination under 37 CFR 1.114 and for consideration of the concurrently filed amendment and Information Disclosure Statement.

Frances Hicks
Frances Hicks
Petitions Examiner
Office of Petitions
Office of the Deputy Commissioner
for Patent Examination Policy

---

[1] The request to apply the issue fee to the new Notice may be satisfied by completing and returning the new Issue Fee Transmittal Form PTOL-85(b), which includes the following language thereon: "Commissioner for Patents is requested to apply the Issue Fee and Publication Fee (if any) or re-apply any previously paid issue fee to the application identified above." Petitioner is advised that, whether a fee is indicated as being due or not, the Issue Fee Transmittal Form **must** be completed and timely submitted to avoid abandonment. Note the language in bold text on the first page of the Notice of Allowance and Fee(s) Due (PTOL-85).

UNITED STATES PATENT AND TRADEMARK OFFICE

Commissioner for Patents
United States Patent and Trademark Office
P.O. Box 1450
Alexandria, VA 22313-1450
www.uspto.gov

Fenwick & West LLP
Silicon Valley Center
801 California Street
Mountain View, CA 94041

MAILED

NOV 0 5 2004

Technology Center 2100

In re Application of:
James P. LESTER, et al.
Application No. 10/021,752
Filed: February 11, 2002
For: INTERACTIVE DELIVERY OF MEDIA USING DYNAMIC PLAYLIST GENERATION SUBJECT TO RESTRICTIVE CRITERIA

DECISION ON REQUEST TO WITHDRAW AS ATTORNEY OR AGENT

This is a decision on the Request to Withdraw from Representation filed September 16, 2004.

A grantable request to withdraw as attorney of record should indicate thereon the present mailing addresses of the attorney(s) who is/are withdrawing from the record and of the applicant. The request for withdrawal must be signed by every attorney seeking to withdraw or contain a clear indication that one attorney is signing on behalf of another/others. A request to withdraw will not be approved unless at least 30 (thirty) days would remain between the date of approval and the later of the expiration date of a time to file a response or the expiration date of the maximum time period which can be extended under 37 C.F.R. § 1.136(a). The effective date of withdrawal being the date of decision and not the date of request. See M.P.E.P. § 402.06. 37 C.F.R. § 1.36 further requires that the applicant or patent owner be notified of the withdrawal of the attorney or agent.

The request is **GRANTED**.

All future communications from the Office will be directed to the below-listed address until otherwise notified by applicant. This correspondence address is provided by the withdrawn attorney(s). Applicant is reminded of the obligation to promptly notify the Patent and Trademark Office (Office) of any change in correspondence address to ensure receipt of all communications from the Office.

Vincent N. Trans
Special Program Examiner
Technology Center 2100
Computer Architecture, Software, and
Information Security
571-272-3613

cc: Steven Stewart
Real Networks, Inc.
2601 Elliott Avenue, Ste. 1000
Seattle, WA 98121

UNITED STATES PATENT AND TRADEMARK OFFICE

Commissioner for Patents
United States Patent and Trademark Office
P.O. Box 1450
Alexandria, VA 22313-1450
www.uspto.gov

AXIOS LAW GROUP, PLLC / REALNETWORKS, INC
1525 FOURTH AVENUE, SUITE 800
SEATTLE, WA 98101

COPY MAILED
JUN 12 2008
OFFICE OF PETITIONS

In re Application of :
James P. Lester et al :
Application No. 10/021,752 :
Filed: October 29, 2001 :
Attorney Docket No. REAL-2006036 (RN008) :

ON PETITION

This is a decision on the petition under 37 CFR 1.137(b), filed February 11, 2008, to revive the above-identified application.

The petition is **GRANTED**.

The above-identified application became abandoned for failure to reply in a timely manner to the Office action mailed January 10, 2007, which set a shortened statutory period for reply of one (1) month or thirty (30) days (whichever is later). Accordingly, the above-identified application became abandoned on February 11, 2007.

Telephone inquiries concerning this decision should be directed to Irvin Dingle at (571) 272-3210.

This matter is being referred to Technology Center AU 2154 for further processing.

Irvin Dingle
Petitions Examiner
Office of Petitions

SPE RESPONSE FOR CERTIFICATE OF CORRECTION

DATE : 5/4/06 7/20/06

Paper No.: _____

TO SPE OF : ART UNIT 2142

SUBJECT : Request for Certificate of Correction for Appl. No.: 10621761 Patent No.: 7043526B1

Please respond to this request for a certificate of correction within 7 days.

Please review the requested changes/corrections as shown in the **COCIN** document(s) in the IFW application image. No new matter should be introduced, nor should the scope or meaning of the claims be changed.

Please complete the response (see below) and forward the completed response to scanning using document code **COCX**.

Virginia Tolbert
Certificates of Correction Branch

703-308-9390 ext. 113

Thank You For Your Assistance

The request for issuing the above-identified correction(s) is hereby:
Note your decision on the appropriate box.

- ☐ **Approved** — **All** changes apply.
- ☒ **Approved in Part** — Specify below which changes **do not** apply.
- ☐ **Denied** — State the reasons for denial below.

Comments: See attached pages with showing text between two red brackets are not approved. Also, I have crossed off the text.

SPE

2128
Art Unit

PTO/SB/44 (04-05)
Approved for use through 04/30/2007. OMB 0651-0033
U.S. Patent and Trademark Office; U.S. DEPARTMENT OF COMMERCE
Under the Paperwork Reduction Act of 1995, no persons are required to respond to a collection of information unless it displays a valid OMB control number.
(Also Form PTO-1050)

UNITED STATES PATENT AND TRADEMARK OFFICE
CERTIFICATE OF CORRECTION

PATENT NO. : 7,043,526

APPLICATION NO.: 10/021,761

ISSUE DATE : May 9, 2006

INVENTOR(S) : Mark A. Wolfe

It is certified that an error appears or errors appear in the above-identified patent and that said Letters Patent is hereby corrected as shown below:

Column 10, line 43, replace "Tase" with --Taste--.

Column 12, line 47, replace "may be passed" with --may be paused--.

Column 23, line 37, replace "Internetowrking" with --Internetworking--.

Column 25, line 21, replace "display" with --displaying--; ~~lines 32-33, delete ", determining whether supplemental information is available for the first document"; and lines 37-38, replace "information available for the first document," with --information is available for the first document,"~~--.

~~Column 26, line 32, replace "displayed on the" with --displayed on the display screen associated with the client computer;--~~

Column 27, line 6, replace "netwwork" with --network--; lines 10 and 15, replace "competitve" with --competitive--; and ~~line 24, replace "further," with --further--~~.

Column 28, line 44, replace "no embedded" with --not embedded--.

Column 29, line 4, replace "form" with --from--; line 6, replace "includes a graphical" with --includes graphical--; line 38, replace "secondary area with" with --secondary area within--; line 40, replace "user'selection" with --user's selection--; line 47, replace "advertisements is" with --advertisements in the secondary area within the web browser window, wherein each of the plurality of advertisements is--; line 56, replace "web browser application" with --web browser application program, wherein the first document has a resource identifier associated--; and line 63 (7 lines from the bottom), replace "wherein, wherein" with --wherein--.

Column 30, line 65 (4 lines from the bottom), replace "advertisement" with --advertisements--.

MAILING ADDRESS OF SENDER (Please do not use customer number below):

Mark A. Wolfe
1076 Tamberwood Court
Woodbury, Minnesota 55125

This collection of information is required by 37 CFR 1.322, 1.323, and 1.324. The information is required to obtain or retain a benefit by the public which is to file (and by the USPTO to process) an application. Confidentiality is governed by 35 U.S.C. 122 and 37 CFR 1.14. This collection is estimated to take 1.0 hour to complete, including gathering, preparing, and submitting the completed application form to the USPTO. Time will vary depending upon the individual case. Any comments on the amount of time you require to complete this form and/or suggestions for reducing this burden, should be sent to the Chief Information Officer, U.S. Patent and Trademark Office, U.S. Department of Commerce, P.O. Box 1450, Alexandria, VA 22313-1450. DO NOT SEND FEES OR COMPLETED FORMS TO THIS ADDRESS. **SEND TO: Attention Certificate of Corrections Branch, Commissioner for Patents, P.O. Box 1450, Alexandria, VA 22313-1450.**

If you need assistance in completing the form, call 1-800-PTO-9199 and select option 2.

PTO/SB/44 (04-05)
Approved for use through 04/30/2007. OMB 0651-0033
U.S. Patent and Trademark Office; U.S. DEPARTMENT OF COMMERCE
Under the Paperwork Reduction Act of 1995, no persons are required to respond to a collection of information unless it displays a valid OMB control number.
(Also Form PTO-1050)

UNITED STATES PATENT AND TRADEMARK OFFICE
CERTIFICATE OF CORRECTION

PATENT NO. : 7,043,526

APPLICATION NO.: 10/021,761

ISSUE DATE : May 9, 2006

INVENTOR(S) : Mark A. Wolfe

It is certified that an error appears or errors appear in the above-identified patent and that said Letters Patent is hereby corrected as shown below:

Column 31, line 8, replace "document is" with --document is a--; line 26, replace "where" with --wherein--; line 33, replace "the the" with --the--; line 63 (8 lines from the bottom), replace "form" with --from--.

Column 32, line 3, replace "determing" with --determining--; and line 52, replace "includin" with --including--.

MAILING ADDRESS OF SENDER (Please do not use customer number below):

Mark A. Wolfe
1076 Tamberwood Court
Woodbury, Minnesota 55125

This collection of information is required by 37 CFR 1.322, 1.323, and 1.324. The information is required to obtain or retain a benefit by the public which is to file (and by the USPTO to process) an application. Confidentiality is governed by 35 U.S.C. 122 and 37 CFR 1.14. This collection is estimated to take 1.0 hour to complete, including gathering, preparing, and submitting the completed application form to the USPTO. Time will vary depending upon the individual case. Any comments on the amount of time you require to complete this form and/or suggestions for reducing this burden, should be sent to the Chief Information Officer, U.S. Patent and Trademark Office, U.S. Department of Commerce, P.O. Box 1450, Alexandria, VA 22313-1450. DO NOT SEND FEES OR COMPLETED FORMS TO THIS ADDRESS. **SEND TO: Attention Certificate of Corrections Branch, Commissioner for Patents, P.O. Box 1450, Alexandria, VA 22313-1450.**

If you need assistance in completing the form, call 1-800-PTO-9199 and select option 2.

UNITED STATES PATENT AND TRADEMARK OFFICE

NOV 14 2005

Commissioner for Patents
United States Patent and Trademark Office
P.O. Box 1450
Alexandria, VA 22313-1450
www.uspto.go

JUAN CARLOS MIRO
227 EDWARD AVENUE
FULLERTON, CA 92833

In re Application of	:	
MIRO ET AL.	:	**DECISION DISMSSING**
Appl No.: 10/021,788	:	**PETITION**
Filed: November 28, 2001	:	*37 CFR 1.181*
For: HEATBALL	:	

This application is before the Director of Technology Center 3700 for reconsideration of the Notice of Abandonment mailed October 4, 2005. In view of the statements in the letter received October 31, 2005, the submission is being treated as a petition under 37 CFR 1.181 to withdraw the holding of abandonment and for various other reasons as outlined below. No fee is required for this petition.

The petition is dismissed. The application remains abandoned.

Initially, it is noted that the petition is informal because it is not properly signed (it is signed by only one of two applicants and the one signing has not been given a power of attorney by the other applicant). Any future submission must be properly signed.

Regarding petitioner's allegation of non-receipt of the office action dated October 18, 2004, the records of the Office indicate that an Office action was mailed to applicant at the address of record on October 18, 2004. There is a strong presumption that mail properly addressed and delivered to the United States Postal Service is in fact delivered to the addressee. An allegation that an Office action was not received may be considered in a formal petition for the withdrawal of the holding of abandonment, in accordance with Delgar Inc. v. Schuyler, 172 USPQ 513. This presumption that the Office action was delivered to applicant may be overcome by a showing that the action was not, in fact, received. As part of the showing, applicant must submit (1) a statement by him, and/or by anyone else at applicant's correspondence address that would have handled the Office action, stating that the Office action was not received, (2) a statement attesting to the fact that a search of the file jacket and other records indicate that the Office action was not received, and (3) all supporting documentary evidence available, as proof contra to the presumption of the delivery of the Office action such as copies of records, which disclose the receipt of other correspondence mailed from the Office on or about the same date as the action in question but fail to disclose receipt of that action would be acceptable or copies of records in which the action would have been entered had it been received, for example, file jacket notations, calendar notations, docket records, etc.

The request filed October 31, 2005 does not include items (1), (2), and (3). Petitioner has not provided a statement attesting to the fact that he has searched the file jacket and that of all other records that he keeps for the instant application, which search failed to indicate that the Office communication in question was received. Petitioner has failed to describe what records, if any, he keeps to let him know what papers he has received from the Office and the due dates for the responses that need to be filed. How and where is the information regarding receipt of Office papers and mailing of responses kept? How does petitioner know a response is due? Is this information kept on a calendar? Separate sheet of paper? On the file maintained by petitioner? An explanation of where/how the above information is kept and copies of the pertinent papers should be submitted. To aid petitioner prepare a renewed petition, if that is petitioner's desire, enclosed is a copy of section 711.03(c) of the Manual of Patent Examining Procedure (MPEP), which section deals with petitions relating to abandonment.

Petitioner argues that the city of Fullerton's building department approved the drawings, so petitioner does not understand why the USPTO has objected to the drawings. It should be noted that the standards set forth in 37 CFR 1.84 apparently are not the drawing standards for the city of Fullerton. To aid petitioner in a better understanding of standards for drawings in United States patents, enclosed is a copy of 37 CFR 1.84. The petitioner's misunderstanding of the drawing standards is not a persuasive argument to overcome the drawing objections. It is not clear what relief (if any) petitioner is requesting with regard to the drawing objections, but the drawing objections remain.

Petitioner argues that the office "has repeatedly deny [sic, presumably rejected] the claims on my application" and that "the examiner continues to delay the issuing of the patent based on these issues". Petitioner also states, "Upon research of similar applications in the same classification for the same type inventions, I see that my claims are very similar, and include the same information, as other previously patented inventions in the same classification." It appears that applicant is unfamiliar with patent prosecution in general as a patent is granted when an inventor invents something new and dissimilar from previous inventions. Petitioner also generally argues that the delays in the patent prosecution are unwarranted and that the customer service is generally poor in his opinion. However, a review of the examiner's rejections and procedural history of the application as a whole is not violative of examining practice and procedure or abusive of the statutes governing patentability as to constitute an abuse of discretionary or arbitrary and capricious actions warranting the exercise of supervisory authority by the undersigned.

Petitioner statement that the office "has repeatedly deny [sic, presumably rejected] the claims on my application" may be construed as an admission that both the non-final rejection and the final rejection were in fact received by petitioner. Any renewed petition must address the inconsistency that petitioner alleges that the final rejection mailed October 18, 2004 was not received, yet petitioner also argues that the claims have been repeatedly denied.

Since applicant is clearly unfamiliar with patent prosecution procedure, applicant may want to consider professional help. A listing of registered patent attorneys and agents is available on the USPTO Internet web site http://www.uspto.gov in the Site Index under "Attorney and Agent Roster." Applicants may also obtain a list of registered patent attorneys and agents located in their area by writing to the Mail Stop OED, Director of the U. S. Patent and Trademark Office, PO Box 1450, Alexandria, VA 22313-1450.

It is noted that the letter received October 31, 2005 has a different address than the correspondence address of record. If applicant/petitioner wants correspondence from the office to be mailed to a different address, then they should file a change of address.

Any request for reconsideration of this decision should be submitted within TWO (2) MONTHS from the mail date of this decision. The reconsideration request should include a cover letter entitled "Renewed Petition Under 37 CFR 1.181".

Richard A. Bertsch, Director
Technology Center 3700

Attachment: 37 CFR 1.84, MPEP 711.03(c)

UNITED STATES PATENT AND TRADEMARK OFFICE

Commissioner for Patents
United States Patent and Trademark Office
P.O. Box 1450
Alexandria, VA 22313-1450
www.uspto.gov

NOV 16 2004

KNOBBE MARTENS OLSON & BEAR LLP
2040 MAIN STREET
FOURTEENTH FLOOR
IRVINE CA 92614

In re Application of	:	
Gholam-Reza Zadno-Azizi	:	NOTICE OF WITHDRAWAL
Serial No.: 10/021,797	:	FROM ISSUE
Filed: December 11, 2001	:	UNDER 37 CFR 1.313(b)
For: Materials for use in Intraocular	:	
Lens System	:	

The above-identified application is withdrawn from issue after payment of the issue fee due to unpatentability of one or more claims. See 37 CFR 1.313(b)(3).

The above-identified application is hereby withdrawn from issue.

The issue fee is refundable upon written request. If, however, the application is again found allowable, the issue fee can be applied toward payment of the issue fee in the amount identified on the new Notice of Allowance and Issue Fee Due upon written request. This request and any balance due must be received on or before the due date noted in the new Notice of Allowance in order to prevent abandonment of the application.

Telephone inquiries should be directed to John E. Kittle at (571)272-2975.

The above-identified application is being forwarded to the examiner for prompt appropriate action, including notifying applicant of the new status of this application.

John E. Kittle

John E. Kittle
Director
Technology Center 3700/2900

UNITED STATES PATENT AND TRADEMARK OFFICE

Commissioner for Patents
United States Patent and Trademark Office
P.O. Box 1450
Alexandria, VA 22313-1450
www.uspto.gov

INGRASSIA FISHER & LORENZ, P.C.
7150 E. CAMELBACK, STE. 325
SCOTTSDALE, AZ 85251

COPY MAILED

MAR 16 2005

OFFICE OF PETITIONS

In re Application of	:	
Bridgelall	:	
Application No. 10/021,843	:	DECISION GRANTING PETITION
Filed: December 13, 2001	:	UNDER 37 CFR 1.137(b)
Attorney Docket No. 1182	:	

This is a decision on the petition under 37 CFR 1.137(b), filed November 17, 2004, to revive the above-identified application.

The petition is **GRANTED**.

The petition satisfies the conditions for revival pursuant to the provisions of 37 CFR 1.137(b) in that (1) the reply in the form of an amendment; (2) the petition fee; and (3) the required statement of unintentional delay have been received. Accordingly, the reply to the Office action is accepted as having been unintentionally delayed.

Telephone inquiries concerning this decision should be directed to the undersigned at (571) 272-3208.

This matter is being referred to Technology Center AU 2876.

Karen Creasy

Karen Creasy
Petitions Examiner
Office of Petitions
Office of the Deputy Commissioner
for Patent Examination Policy

UNITED STATES PATENT AND TRADEMARK OFFICE

Commissioner for Patents
United States Patent and Trademark Office
P.O. Box 1450
Alexandria, VA 22313-1450
www.uspto.gov

COPY MAILED

FEB 25 2005

OFFICE OF PETITIONS

MAINE & ASMUS
100 MAIN STREET
P.O. BOX 3445
NASHUA NH 03061-3445

In re Application of	:	
Charles Howland	:	
Application No. 10/021,851	:	ON PETITION
Filed: December 13, 2001	:	
Attorney Docket No. WM12-US	:	

This is a decision on the petition, filed February 23, 2005 and resubmitted on February 25, 2005, under 37 CFR 1.313(c)(2) to withdraw the above-identified application from issue after payment of the issue fee.

The petition is **GRANTED.**

The above-identified application is withdrawn from issue for consideration of a submission under 37 CFR 1.114 (request for continued examination). See 37 CFR 1.313(c)(2).

Petitioner is advised that the issue fee paid on June 14, 2004 in the above-identified application cannot be refunded. If, however, the above-identified application is again allowed, petitioner may request that it be applied towards the issue fee required by the new Notice of Allowance.[1]

Telephone inquiries should be directed to the undersigned at (571) 272-3208.

The examiner of Technology Center AU 1774 will consider the request for continued examination under 37 CFR 1.114.

Karen Creasy

Karen Creasy
Petitions Examiner
Office of Petitions
Office of the Deputy Commissioner
for Patent Examination Policy

---

[1] The request to apply the issue fee to the new Notice may be satisfied by completing and returning the new Issue Fee Transmittal Form PTOL-85(b), which includes the following language thereon: "Commissioner for Patents is requested to apply the Issue Fee and Publication Fee (if any) or re-apply any previously paid issue fee to the application identified above." Petitioner is advised that, whether a fee is indicated as being due or not, the Issue Fee Transmittal Form **must** be completed and timely submitted to avoid abandonment. Note the language in bold text on the first page of the Notice of Allowance and Fee(s) Due (PTOL-85).

UNITED STATES PATENT AND TRADEMARK OFFICE

COMMISSIONER FOR PATENTS
UNITED STATES PATENT AND TRADEMARK OFFICE
P.O. BOX 1450
ALEXANDRIA, VA 22313-1450
www.uspto.gov

Paper No. _____

Date :February 25, 2005

TO : Director, Office of Patent Publication

FROM : Office of the Deputy Commissioner
for Patent Examination Policy

SUBJECT : Withdrawal from Issue of

Applicant(s) :Charles Howland
Application No. :10/021,851
Filed :December 13, 2001

The above-identified application has been assigned Patent No. 6,861,120 and an issue date of March 1, 2005.

It is hereby directed that this application be withdrawn from issue at the request of the applicant.

Do not refund the issue fee.

The following erratum should be published in the Official Gazette if the above-identified application is published in the OG of March 1, 2005:

> "All reference to Patent No. 6,861,120 to Charles Howland of Japan for WEARABLE PROTECTIVE SYSTEM HAVING PROTECTIVE ELEMENTS appearing in the Official Gazette of March 1, 2005 should be deleted since no patent was granted."

Karen Creasy

Karen Creasy
Petitions Examiner
Office of Petitions
Office of the Deputy Commissioner
for Patent Examination Policy

cc: Paul Harrison, Crystal Park 3-441 (FAX-306-2737)
Deneise Boyd, Crystal Park 2, Suite 1100 (FAX-308-5413)
Mary Louise McAskill, Crystal Park 3-910 (FAX 305-4372)
Niomi Farmer, Crystal Park 3-910 (FAX-305-4372)
Mary E. Johnson (Cookie), P/OCS, CM1-6D07
Duane Davis (CDS), CM1-6A07
Tamara Greene, Crystal Park 3-908

UNITED STATES PATENT AND TRADEMARK OFFICE

Commissioner for Patents
United States Patent and Trademark Office
P.O. Box 1450
Alexandria, VA 22313-1450
www.uspto.gov

QUALCOMM INCORPORATED
5775 MOREHOUSE DR.
SAN DIEGO CA 92121

COPY MAILED

DEC 2 8 2007

OFFICE OF PETITIONS

In re Application of	:	
W. Eli Strich et al	:	
Application No. 10/021,865	:	DECISION ON PETITION
Filed: December 17, 2001	:	
Attorney Docket No. QCPA113B1C1	:	

This is a decision on the petition under 37 CFR 1.137(b), filed June 29, 2007, to revive the above-identified application.

The petition is **GRANTED**.

The application became abandoned for failure to reply in a timely manner to the non-final Office action mailed August 31, 2006, which set a shortened statutory period for reply of three (3) months. No extensions of time were obtained under the provisions of 37 CFR 1.136(a). Accordingly, the application became abandoned on December 1, 2006. A Notice of Abandonment was mailed on April 3, 2007.

The petition satisfies the requirements of 37 CFR 1.137(b) in that petitioner has supplied (1) the reply in the form of an amendment, (2) the petition fee of $1,500, and (3) an adequate statement of unintentional delay. Accordingly, the reply to the Office action of August 31, 2006 is accepted as being unintentionally delayed.

The rule at 37 CFR 1.137(b)(3) requires a statement that "the entire delay in filing the required reply from the due date for the reply until the filing of a grantable petition pursuant to 37 CFR 1.137(b) was unintentional." Since the statement appearing in the petition varies from the language required by 37 CFR 1.137(b)(3), the statement is being construed as the required statement. Petitioner must notify the Office if this is **not** a correct reading of the statement appearing in the petition.

The petition is accompanied by the filing of a request for continued examination under 37 CFR 1.114. However, as prosecution of this application is not closed, the filing of the request under 37 CFR 1.114 is inappropriate and will not be

entered. The $790 filing fee submitted therefor will be refunded to petitioner's deposit account in due course.

Telephone inquiries concerning this decision should be directed to the undersigned at (571) 272-3218 or to the Office of Petitions Help Desk at (571) 272-3282 after January 3, 2008.

This application is being referred to Technology Center AU 2611 for appropriate action in the normal course of business on the reply received June 29, 2007.

Frances Hicks
Petitions Examiner
Office of Petitions

SPE RESPONSE FOR CERTIFICATE OF CORRECTION

DATE : 3/7/05

Paper No.: —

TO SPE OF : ART UNIT 1651

SUBJECT : Request for Certificate of Correction on Patent No.: 6797266 B2

A response is requested with respect to the accompanying request for a certificate of correction.

Please complete this form and return with file, within **7** days to:
Certificates of Correction Branch - PK 3-915
Palm location **7580** - Tel. No. 305-8309

With respect to the change(s) requested, correcting Office and/or Applicant's errors, should the patent read as shown in the certificate of correction? No new matter should be introduced, nor should the scope or meaning of the claims be changed.

Virginia Tolbert

Thank You For Your Assistance

Certificates of Correction Branch

The request for issuing the above-identified correction(s) is hereby:
Note your decision on the appropriate box.

- ☑ **Approved** — **All** changes apply.
- ☐ **Approved in Part** — Specify below which changes **do not** apply.
- ☐ **Denied** — State the reasons for denial below.

Comments:

All changes are to be made per Applicants' request since they are correct and claim should read as amended by Examiner's amendment of June 2, 2004.

SPE

1651
Art Unit

PTOL-306 (REV. 7/03)

U.S. DEPARTMENT OF COMMERCE Patent and Trademark Office

Under the Paperwork Reduction Act of 1995, no persons are required to respond to a collection of information unless it displays valid OMB control number.

PETITION TO ACCEPT UNINTENTIONALLY DELAYED PAYMENT OF MAINTENANCE FEE IN AN EXPIRED PATENT (37 CFR 1.378(c))

Patent Number	Issue Date (YYYY-MM-DD)	Application Number	Filing Date (YYYY-MM-DD)	Docket Number (if applicable)
6665909	2003-12-23	10021885	2001-12-14	047711-0289

CAUTION: Maintenance fee (and surcharge, if any) payment must correctly identify: (1) the patent number and (2) the application number of the actual U.S. application leading to issuance of that patent to ensure the fee(s) is/are associated with the correct patent. 37 CFR 1.366(c) and (d).

SMALL ENTITY
☐ Patentee claims, or has previously claimed, small entity status. See 37 CFR 1.27.

LOSS OF ENTITLEMENT TO SMALL ENTITY STATUS
☐ Patentee is no longer entitled to small entity status. See 37 CFR 1.27(g)

NOT Small Entity		Small Entity	
Fee	Code	Fee	Code
◉ 3 ½ year	(1551)	○ 3 ½ year	(2551)
○ 7 ½ year	(1552)	○ 7 ½ year	(2552)
○ 11 ½ year	(1553)	○ 11 ½ year	(2553)

SURCHARGE
The surcharge required by 37 CFR 1.20(i)(2) (Fee Code 1558) must be paid as a condition of accepting unintentionally delayed payment of the maintenance fee.

MAINTENANCE FEE (37 CFR 1.20(e)-(g))
The appropriate maintenance fee must be submitted with this petition.

STATEMENT
THE UNDERSIGNED CERTIFIES THAT THE DELAY IN PAYMENT OF THE MAINTENANCE FEE TO THIS PATENT WAS UNINTENTIONAL

PETITIONER(S) REQUEST THAT THE DELAYED PAYMENT OF THE MAINTENANCE FEE BE ACCEPTED AND THE PATENT REINSTATED

THIS PORTION MUST BE COMPLETED BY THE SIGNATORY OR SIGNATORIES

37 CFR 1.378(d) states: "Any petition under this section must be signed by an attorney or agent registered to practice before the Patent and Trademark Office, or by the patentee, the assignee, or other party in interest."

I certify, in accordance with 37 CFR 1.4(d)(4) that I am

◉ An attorney or agent registered to practice before the Patent and Trademark Office

○ A sole patentee

○ A joint patentee; I certify that I am authorized to sign this submission on behalf of all the other patentees.

○ A joint patentee; all of whom are signing this e-petition

○ The assignee of record of the entire interest

Patent Practitioner			
A signature of the applicant or representative is required in accordance with 37 CFR 1.33 and 10.18. Please see 37 CFR 1.4(d) for the form of the signature			
Signature	/Ajit S. Narang/	Date (YYYY-MM-DD)	2008-02-12
Name	Ajit S. Narang	Registration Number	55480

This collection of information is required by 37 CFR 1.378(c). The information is required to obtain or retain a benefit by the public which is to file (and by the USPTO to process) an application. Confidentiality is governed by 35 U.S.C. 122 and 37 CFR 1.11 and 1.14. This collection is estimated to take 1 hour to complete, including gathering, preparing, and submitting the completed application form to the USPTO. Time will vary depending upon the individual case. Any comments on the amount of time you require to complete this form and/ or suggestions for reducing this burden, should be sent to the Chief Information Officer, U.S. Patent and Trademark Office, U.S. Department of Commerce, P.O. Box 1450, Alexandria, VA 22313-1450. DO NOT SEND FEES OR COMPLETED FORMS TO THIS ADDRESS. **This form can only be used when in conjunction with EFS-Web. If this form is mailed to the USPTO, it may cause delays in reinstating the patent.**

Privacy Act Statement

The Privacy Act of 1974 (P.L. 93-579) requires that you be given certain information in connection with your submission of the attached form related to a patent application or patent. Accordingly, pursuant to the requirements of the Act, please be advised that: (1) the general authority for the collection of this information is 35 U.S.C. 2(b)(2); (2) furnishing of the information solicited is voluntary; and (3) the principal purpose for which the information is used by the U.S. Patent and Trademark Office is to process and/or examine your submission related to a patent application or patent. If you do not furnish the requested information, the U.S. Patent and Trademark Office may not be able to process and/or examine your submission, which may result in termination of proceedings or abandonment of the application or expiration of the patent.

The information provided by you in this form will be subject to the following routine uses:

1. The information on this form will be treated confidentially to the extent allowed under the Freedom of Information Act (5 U.S.C. 552) and the Privacy Act (5 U.S.C. 552a). Records from this system of records may be disclosed to the Department of Justice to determine whether the Freedom of Information Act requires disclosure of these record s.

2. A record from this system of records may be disclosed, as a routine use, in the course of presenting evidence to a court, magistrate, or administrative tribunal, including disclosures to opposing counsel in the course of settlement negotiations.

3. A record in this system of records may be disclosed, as a routine use, to a Member of Congress submitting a request involving an individual, to whom the record pertains, when the individual has requested assistance from the Member with respect to the subject matter of the record.

4. A record in this system of records may be disclosed, as a routine use, to a contractor of the Agency having need for the information in order to perform a contract. Recipients of information shall be required to comply with the requirements of the Privacy Act of 1974, as amended, pursuant to 5 U.S.C. 552a(m).

5. A record related to an International Application filed under the Patent Cooperation Treaty in this system of records may be disclosed, as a routine use, to the International Bureau of the World Intellectual Property Organization, pursuant to the Patent Cooperation Treaty.

6. A record in this system of records may be disclosed, as a routine use, to another federal agency for purposes of National Security review (35 U.S.C. 181) and for review pursuant to the Atomic Energy Act (42 U.S.C. 218(c)).

7. A record from this system of records may be disclosed, as a routine use, to the Administrator, General Services, or his/her designee, during an inspection of records conducted by GSA as part of that agency's responsibility to recommend improvements in records management practices and programs, under authority of 44 U.S.C. 2904 and 2906. Such disclosure shall be made in accordance with the GSA regulations governing inspection of records for this purpose, and any other relevant (i.e., GSA or Commerce) directive. Such disclosure shall not be used to make determinations about individuals.

8. A record from this system of records may be disclosed, as a routine use, to the public after either publication of the application pursuant to 35 U.S.C. 122(b) or issuance of a patent pursuant to 35 U.S.C. 151. Further, a record may be disclosed, subject to the limitations of 37 CFR 1.14, as a routine use, to the public if the record was filed in an application which became abandoned or in which the proceedings were terminated and which application is referenced by either a published application, an application open to public inspections or an issued patent.

9. A record from this system of records may be disclosed, as a routine use, to a Federal, State, or local law enforcement agency, if the USPTO becomes aware of a violation or potential violation of law or regulation.

UNITED STATES PATENT AND TRADEMARK OFFICE

Commissioner for Patents
United States Patent and Trademark Office
P.O. Box 1450
Alexandria, VA 22313-1450
www.uspto.gov

In re Patent No. 6665909
Issue Date: December 23,2003
Application No. 10021885
Filed: December 14,2001
Attorney Docket No. 047711-0289

:

:DECISION GRANTING PETITION
:UNDER 37 CFR 1.378(c)

:

This is a decision on the electronic petition, filed February 12,2008 ,under 37 CFR 1.378(c) to accept the unintentionally delayed payment of the 3.5 year maintenance fee for the above-identified patent.

The petition is GRANTED.

The maintenance fee is accepted, and the above-identified patent reinstated as of February 12,2008 . This decision also constitutes notice that the fee has been accepted. An electronic copy of the petition and this decision has been created as an entry in an Image File Wrapper. Nevertheless, petitioner should print and retain an independent copy

Telephone inquires related to this electronic decision should be directed to the Electronic Business Center at 1-866-217-9197.

UNITED STATES PATENT AND TRADEMARK OFFICE

COMMISSIONER FOR PATENTS
UNITED STATES PATENT AND TRADEMARK OFFICE
WASHINGTON, D.C. 20231
www.uspto.gov

JJGJr.:08-02

Paper 7

LAW OFFICES OF
RONALD M ANDERSON
600 108TH AVE, NE
SUITE 507
BELLEVUE WA 98004

COPY MAILED

SEP 3 0 2002

OFFICE OF PETITIONS

In re Application of
Chen, et al
Application No. 10/021,891
Filed: 13 December, 2001
Attorney Docket No. CHEN0145

: DECISION ON PETITION

This is a decision on the petition under ¶(a) of 37 C.F.R. §1.47,[1] filed on 11 September, 2002.

NOTE: Office records--including Petitioner's application papers--reflect a filing date of 13 December, 2001.

Petitioner's subsequent filings, save for the IDS filed 16 April, 2002, reflect an incorrect filing date of 12 December, 2001.

Petitioner has shown that, while all other inventors have signed the oath/declaration, the non-signing inventor **Brian D. Wilkerson (Mr. Wilkerson)** has refused or otherwise failed to join in the filing of the above-identified application after having been presented with the application papers.

---

[1] The regulations at 37 C.F.R. §1.47 provide:
§1.47 Filing when an inventor refuses to sign or cannot be reached.
(a) If a joint inventor refuses to join in an application for patent or cannot be found or reached after diligent effort, the application may be made by the other inventor on behalf of himself or herself and the nonsigning inventor. The oath or declaration in such an application must be accompanied by a petition including proof of the pertinent facts, the fee set forth in §1.17(h), and the last known address of the nonsigning inventor. The nonsigning inventor may subsequently join in the application by filing an oath or declaration complying with §1.63.
(b) Whenever all of the inventors refuse to execute an application for patent, or cannot be found or reached after diligent effort, a person to whom an inventor has assigned or agreed in writing to assign the invention, or who otherwise shows sufficient proprietary interest in the matter justifying such action, may make application for patent on behalf of and as agent for all the inventors. The oath or declaration in such an application must be accompanied by a petition including proof of the pertinent facts, a showing that such action is necessary to preserve the rights of the parties or to prevent irreparable damage, the fee set forth in §1.17(h), and the last known address of all of the inventors. An inventor may subsequently join in the application by filing an oath or declaration complying with §1.63.
(c) The Office will send notice of the filing of the application to all inventors who have not joined in the application at the address(es) provided in the petition under this section, and publish notice of the filing of the application in the *Official Gazette*. The Office may dispense with this notice provision in a continuation or divisional application, if notice regarding the filing of the prior application was given to the nonsigning inventor(s).
[47 Fed. Reg. 41275, Sept. 17, 1982, effective Oct. 1, 1982; 48 Fed. Reg. 2709, Jan. 20, 1983, effective Feb. 27, 1983; revised, 62 Fed. Reg. 53131, Oct. 10, 1997, effective Dec. 1, 1997; revised, 65 Fed. Reg. 54604, Sept. 8, 2000, effective Nov. 7, 2000]

Specifically, the declaration/statement/submission of facts of/by Ronald M. Anderson (Reg. No. 28,829) and Davina Childs (Reg. No. 47,485) establish that the non-signing inventor was mailed the application papers, including the specification, claims and drawings, but failed to respond positively to the request that he sign the declaration or in fact sign said declaration.

Lastly, Petitioner has submitted a declaration in compliance with 37 C.F.R. §1.63 and §1.64 and petitioner has shown that such action is necessary to prevent irreparable damage.

This application and papers have been reviewed and found in compliance with 37 C.F.R. §1.47(a).

This application hereby is **ACCORDED status under 37 C.F.R. §1.47(a)**.[2]

As provided under 37 C.F.R. §1.47(a), the Office will forward notice of this application's filing to the non-signing inventor at the address given in the petition.

Notice of the filing of this application also will be published in the Official Gazette.

This file is being forwarded to OIPE for processing consistent with this decision, and then will be forwarded for examination in due course.

Telephone inquiries concerning this decision may be directed to the undersigned at (703) 305-9199.

John J. Gillon, Jr.
Senior Attorney
Office of Petitions
Office of the Deputy Commissioner
for Patent Examination Policy

[2] Pursuant to Petitioner's authorization, the petition fee herein ($130.00) is charged to Deposit Account 01-1940. (The fee for the petition filed on 11 September, 2002, was not previously paid.)

UNITED STATES PATENT AND TRADEMARK OFFICE

Commissioner for Patents
United States Patent and Trademark Office
P.O. Box 1450
Alexandria, VA 22313-1450
www.uspto.gov

ERICSSON INC.
6300 LEGACY DRIVE
M/S EVR 1-C-11
PLANO TX 75024

COPY MAILED

NOV 2 1 2007

OFFICE OF PETITIONS

In re Application of
LINDQUIST et al.
Application No. 10/021,940
Filed: 12/12/2001
Attorney Docket No. P14554-US1

DECISION ON PETITION

This is a decision on the petition under 37 CFR 1.181, filed August 3, 2007, requesting that the Office withdraw the holding of abandonment in the above-identified application.

On October 30, 2006, the Office mailed a final Office action, which set a three (3) month shortened statutory period for reply. On December 28, 2006, petitioner submitted a reply in the form of an amendment, which was located in the file. Nevertheless, on June 6, 2007, the Office mailed a Notice of Abandonment, stating that the application was abandoned because no reply had been received.

The final Office action of October 30, 2006, set a three-month shortened statutory period for reply. Therefore, a timely and proper reply was due on or before January 30, 2007. The record indicates that petitioner submitted a reply in the form an amendment within the three-month shortened statutory period. Furthermore, the Examiner has reviewed the amendment and determined that it places the application in condition for allowance. Accordingly, petitioner filed a timely and proper reply on December 28, 2006.

The petition is **granted**. The holding of abandonment is withdrawn and the application will be restored to pending status.

This matter will be referred to Technology Center Art Unit 2612 for appropriate action in the normal course of business on the reply received on December 28, 2006.

Telephone inquiries concerning this matter may be directed to the undersigned at (571) 272-3211. All other questions regarding the status of the application or the examination process should be directed to the Technology Center.

Christina Tartera Donnell

Christina Tartera Donnell
Senior Petitions Attorney
Office of Petitions

UNITED STATES PATENT AND TRADEMARK OFFICE

COMMISSIONER FOR PATENTS
UNITED STATES PATENT AND TRADEMARK OFFICE
P.O. BOX 1450
ALEXANDRIA, VA 22313-1450
www.uspto.gov

#12

MAY 25 2004

Karen L. Elbing, Ph.D.
Clark & Elbing LLP
101 Federal Street
Boston, MA 02110

In re Application of :
Andrew G. Plaut et al :
Serial No.: 10/021,952 : DECISION ON PETITION
Attorney Docket No.: 00398/502003

This is in response to "Petition to Withdraw Notice of Abandonment" filed March 18, 2004.

On August 15, 2003, an Office action was mailed. On March 3, 2004, a Notice of Abandonment was mailed for failure to timely file a proper response. On March 18, 2004, the instant petition was filed. Applicants urge that the Office action dated August 15, 2003 was never received.

Applicant's statement and evidence show that the office action dated August 15, 2003 was never received. Accordingly, the petition is granted.

Petition Granted.

The application has been returned to pending status. The Office action dated August 15, 2003 is being re-mailed herewith. The shortened statutory period for reply is set to expire Three months from the mailing of this letter.

Should there be any questions about this decision please contact Cecilia Tsang, by letter addressed to Director, TC1600, at the address listed above, or by telephone at 571-272-0562 or by facsimile at 703-872-9306.

Cecilia Tsang for
Jasemine Chambers
Director, Technology Center 1600

PTO/SB/66 (03-09)
Approved for use through 03/31/2012. OMB 0651-0016
U.S. Patent and Trademark Office: U.S. DEPARTMENT OF COMMERCE
Under the Paperwork Reduction Act of 1995, no persons are required to respond to a collection of information unless it displays valid OMB control number.

PETITION TO ACCEPT UNINTENTIONALLY DELAYED PAYMENT OF MAINTENANCE FEE IN AN EXPIRED PATENT (37 CFR 1.378(c))

Patent Number	Issue Date (YYYY-MM-DD)	Application Number	Filing Date (YYYY-MM-DD)	Docket Number (if applicable)
6,817,478	2004-11-16	10/022,002	2001-12-14	IDS-14902/14

CAUTION: Maintenance fee (and surcharge, if any) payment must correctly identify: (1) the patent number and (2) the application number of the actual U.S. application leading to issuance of that patent to ensure the fee(s) is/are associated with the correct patent. 37 CFR 1.366(c) and (d).

SMALL ENTITY
☒ Patentee claims, or has previously claimed, small entity status. See 37 CFR 1.27.

LOSS OF ENTITLEMENT TO SMALL ENTITY STATUS
☐ Patentee is no longer entitled to small entity status. See 37 CFR 1.27(g)

NOT Small Entity		Small Entity	
Fee	Code	Fee	Code
○ 3 ½ year	(1551)	◉ 3 ½ year	(2551)
○ 7 ½ year	(1552)	○ 7 ½ year	(2552)
○ 11 ½ year	(1553)	○ 11 ½ year	(2553)

SURCHARGE
The surcharge required by 37 CFR 1.20(i)(2) (Fee Code 1558) must be paid as a condition of accepting unintentionally delayed payment of the maintenance fee.

MAINTENANCE FEE (37 CFR 1.20(e)-(g))
The appropriate maintenance fee must be submitted with this petition.

STATEMENT
THE UNDERSIGNED CERTIFIES THAT THE DELAY IN PAYMENT OF THE MAINTENANCE FEE TO THIS PATENT WAS UNINTENTIONAL

PETITIONER(S) REQUEST THAT THE DELAYED PAYMENT OF THE MAINTENANCE FEE BE ACCEPTED AND THE PATENT REINSTATED

THIS PORTION MUST BE COMPLETED BY THE SIGNATORY OR SIGNATORIES

37 CFR 1.378(d) states: "Any petition under this section must be signed by an attorney or agent registered to practice before the Patent and Trademark Office, or by the patentee, the assignee, or other party in interest."

I certify, in accordance with 37 CFR 1.4(d)(4) that I am

◉ An attorney or agent registered to practice before the Patent and Trademark Office

○ A sole patentee

○ A joint patentee; I certify that I am authorized to sign this submission on behalf of all the other patentees.

○ A joint patentee; all of whom are signing this e-petition

○ The assignee of record of the entire interest

Patent Practitioner			
A signature of the applicant or representative is required in accordance with 37 CFR 1.33 and 10.18. Please see 37 CFR 1.4(d) for the form of the signature			
Signature	/John G. Posa/	Date (YYYY-MM-DD)	2009-06-04
Name	John G. Posa	Registration Number	37424

This collection of information is required by 37 CFR 1.378(c). The information is required to obtain or retain a benefit by the public which is to file (and by the USPTO to process) an application. Confidentiality is governed by 35 U.S.C. 122 and 37 CFR 1.11 and 1.14. This collection is estimated to take 1 hour to complete, including gathering, preparing, and submitting the completed application form to the USPTO. Time will vary depending upon the individual case. Any comments on the amount of time you require to complete this form and/ or suggestions for reducing this burden, should be sent to the Chief Information Officer, U.S. Patent and Trademark Office, U.S. Department of Commerce, P.O. Box 1450, Alexandria, VA 22313-1450. DO NOT SEND FEES OR COMPLETED FORMS TO THIS ADDRESS. **This form can only be used when in conjunction with EFS-Web. If this form is mailed to the USPTO, it may cause delays in reinstating the patent.**

Privacy Act Statement

The Privacy Act of 1974 (P.L. 93-579) requires that you be given certain information in connection with your submission of the attached form related to a patent application or patent. Accordingly, pursuant to the requirements of the Act, please be advised that: (1) the general authority for the collection of this information is 35 U.S.C. 2(b)(2); (2) furnishing of the information solicited is voluntary; and (3) the principal purpose for which the information is used by the U.S. Patent and Trademark Office is to process and/or examine your submission related to a patent application or patent. If you do not furnish the requested information, the U.S. Patent and Trademark Office may not be able to process and/or examine your submission, which may result in termination of proceedings or abandonment of the application or expiration of the patent.

The information provided by you in this form will be subject to the following routine uses:

1. The information on this form will be treated confidentially to the extent allowed under the Freedom of Information Act (5 U.S.C. 552) and the Privacy Act (5 U.S.C. 552a). Records from this system of records may be disclosed to the Department of Justice to determine whether the Freedom of Information Act requires disclosure of these records.

2. A record from this system of records may be disclosed, as a routine use, in the course of presenting evidence to a court, magistrate, or administrative tribunal, including disclosures to opposing counsel in the course of settlement negotiations.

3. A record in this system of records may be disclosed, as a routine use, to a Member of Congress submitting a request involving an individual, to whom the record pertains, when the individual has requested assistance from the Member with respect to the subject matter of the record.

4. A record in this system of records may be disclosed, as a routine use, to a contractor of the Agency having need for the information in order to perform a contract. Recipients of information shall be required to comply with the requirements of the Privacy Act of 1974, as amended, pursuant to 5 U.S.C. 552a(m).

5. A record related to an International Application filed under the Patent Cooperation Treaty in this system of records may be disclosed, as a routine use, to the International Bureau of the World Intellectual Property Organization, pursuant to the Patent Cooperation Treaty.

6. A record in this system of records may be disclosed, as a routine use, to another federal agency for purposes of National Security review (35 U.S.C. 181) and for review pursuant to the Atomic Energy Act (42 U.S.C. 218(c)).

7. A record from this system of records may be disclosed, as a routine use, to the Administrator, General Services, or his/her designee, during an inspection of records conducted by GSA as part of that agency's responsibility to recommend improvements in records management practices and programs, under authority of 44 U.S.C. 2904 and 2906. Such disclosure shall be made in accordance with the GSA regulations governing inspection of records for this purpose, and any other relevant (i.e., GSA or Commerce) directive. Such disclosure shall not be used to make determinations about individuals.

8. A record from this system of records may be disclosed, as a routine use, to the public after either publication of the application pursuant to 35 U.S.C. 122(b) or issuance of a patent pursuant to 35 U.S.C. 151. Further, a record may be disclosed, subject to the limitations of 37 CFR 1.14, as a routine use, to the public if the record was filed in an application which became abandoned or in which the proceedings were terminated and which application is referenced by either a published application, an application open to public inspections or an issued patent.

9. A record from this system of records may be disclosed, as a routine use, to a Federal, State, or local law enforcement agency, if the USPTO becomes aware of a violation or potential violation of law or regulation.

UNITED STATES PATENT AND TRADEMARK OFFICE

Commissioner for Patents
United States Patent and Trademark Office
P.O. Box 1450
Alexandria, VA 22313-1450
www.uspto.gov

In re Patent No. 6817478
Issue Date: November 16,2004
Application No. 10022002
Filed: December 14,2001
Attorney Docket No. IDS-14902/14

:
:DECISION GRANTING PETITION
:UNDER 37 CFR 1.378(c)
:

This is a decision on the electronic petition, filed June 4,2009 ,under 37 CFR 1.378(c) to accept the unintentionally delayed payment of the 3.5 year maintenance fee for the above-identified patent.

The petition is **GRANTED**.

The maintenance fee is accepted, and the above-identified patent reinstated as of June 4,2009 . This decision also constitutes notice that the fee has been accepted. An electronic copy of the petition and this decision has been created as an entry in the Image File Wrapper. Nevertheless, petitioner should print and retain an independent copy.

Telephone inquiries related to this electronic decision should be directed to the Electronic Business Center at 1-866-217-9197.

UNITED STATES PATENT AND TRADEMARK OFFICE

COMMISSIONER FOR PATENTS
UNITED STATES PATENT AND TRADEMARK OFFICE
P.O. BOX 1450
ALEXANDRIA, VA 22313-1450
www.uspto.gov

APR 26 2005

In re Application of	:	
Timothy F. Thomas et al.	:	NOTICE OF WITHDRAWAL
Serial No. 10/022,016	:	FROM ISSUE
Filed: December 13, 2001	:	UNDER 37 CFR 1.313(b)
For: DUAL-LID CIGARETTE	:	
CONTAINER AND METHOD OF	:	
PACKAGING CIGARETTES	:	

The above-identified application is hereby withdrawn from issue after payment of the issue fee due to unpatentability of one or more claims. See 37 CFR 1.313(b)(3). Consideration of the prior art submitted in the Information Disclosure Statement filed on March 3, 2005 (after allowance but prior to payment of the Issue Fee) showed that one or more claims are unpatentable.

The issue fee is refundable upon written request. If, however, the application is again found allowable, the issue fee can be applied toward payment of the issue fee in the amount identified on the new Notice of Allowance and Issue Fee Due upon written request. This request and any balance due must be received on or before the due date noted in the new Notice of Allowance in order to prevent abandonment of the application.

Telephone inquiries should be directed to Mickey Yu, SPE, Art Unit 3728 at (571) 272-4562. The above-identified application is being forwarded to the examiner for prompt appropriate action, including notifying applicant of the new status of this application.

E. R. Kazenske, Director
Technology Center 3700

Kilpatrick Stockton, LLP
1001 West Fourth Street
Winston-Salem, NC 27101

UNITED STATES PATENT AND TRADEMARK OFFICE

COMMISSIONER FOR PATENTS
UNITED STATES PATENT AND TRADEMARK OFFICE
WASHINGTON, D.C. 20231
www.uspto.gov

Paper No. 3

MAIL

JUN 1 9 2002

DIRECTOR OFFICE
TECHNOLOGY CENTER 2600

John D. Goodhue
ZARLEY, MCKEE, THOMTE, VOORHEES & SEASE
801 Grand Avenue, Suite 3200
Des Moines, Iowa 50309-2721

In re Application of :
Peter V. Boesen :
Application No. 10/022,022 :
Filed: December 13, 2001 :
For: VOICE COMMUNICATION DEVICE WITH FOREIGN LANGUAGE TRANSLATION

DECISION ON PETITION TO MAKE SPECIAL

This is a decision on the Petition To Make Special under M.P.E.P. § 708.02 (mistyped as 708.03 in the petition), VIII: accelerated examination which is treated as M.P.E.P. § 708.02, XI: Invention for Countering Terrorism,filed February 05, 2002.

A grantable petition to make an application special under 37 C.F.R. § 1.102(d), and in accordance with M.P.E.P. § 708.02, Section XI, for an invention which contributes to the countering of terrorism, must include the petition fee under 37 C.F.R. § 1.17(I). The petition must also be accompanied by a statement explaining how the invention contributes to countering terrorism.

The types of technology for countering terrorism could include systems for detecting/identifying explosives, aircraft sensors/security systems, and vehicular barricades/disabling systems. The mere fact that a device could be used in the field of terrorism does not in itself qualify for special status. The translating device of the present invention is not considered the same type as those listed above.

Accordingly, the petition is **DENIED**.

It is noted that petitioner could file a petition under MPEP 708.02 VIII (accelerated examination) if special status were still desired.

Petitioner is given TWO MONTHS from the date of this decision to request reconsideration and supplement the original petition as appropriate.

The application file will be forwarded to the central files to await action on the merits in due course..

Reinhard J. Eisenzopf
Special Program Examiner
Technology Center 2600
Communications
703-305-4711

UNITED STATES PATENT AND TRADEMARK OFFICE

COMMISSIONER FOR PATENTS
UNITED STATES PATENT AND TRADEMARK OFFICE
WASHINGTON, DC 20231
www.uspto.gov

Paper No. 4
MAIL

OCT 17 2002

DIRECTOR OFFICE
TECHNOLOGY CENTER 2600

MCKEE, VOORHEES & SEASE, P.L.C.
801 GRAND AVENUE
SUITE 3200
DES MOINES, IA 50309-2721

In re Application of:
Peter V. Boesen
Application No. 10/022,022
Filed: December 13, 2001
For: VOICE COMMUNICATION DEVICE WITH FOREIGN LANGUAGE TRANSLATION

DECISION ON PETITION TO MAKE SPECIAL

This is a decision on the Request to Reconsider the Decision of June 19, 2002 on the Petition To Make Special under MPEP 708.02, XI: Invention for Countering Terrorism, filed February 5, 2002.

A grantable petition to make an application special under 37 C.F.R. § 1.102(d), and in accordance with MPEP 708.02, XI, for an invention which contributes to the countering of terrorism, must include the petition fee under 37 CFR 1.17(i). The petition must also be accompanied by a statement explaining how the invention contributes to countering terrorism. The types of technology for countering terrorism could include, but are not limited to, systems for detecting/identifying explosives, aircraft sensors/security systems, and vehicular barricades/disabling systems.

The request for reconsideration points out that the required fee for the petition to make special was paid at the time of filing of the petition received on February 5, 2002 and that a statement explaining how the invention contributes to countering terrorism was also submitted herewith.

A review of the file record shows that both the fee and statement are present. The statement submitted explaining how the invention contributes to countering terrorism is found persuasive.

Accordingly, the petition is **GRANTED**.

The application will retain its special status throughout its entire course of prosecution in the Patent and Trademark Office, including appeal, if any to the Board of Patent Appeals and Interferences, subject only to diligent prosecution by the applicant.

The application file will be forwarded to the examiner for expedited prosecution.

Reinhard J. Eisenzopf
Special Program Examiner
Technology Center 2600
Communications
(703) 305-4711

UNITED STATES PATENT AND TRADEMARK OFFICE

Commissioner for Patents
United States Patent and Trademark Office
P.O. Box 1450
Alexandria, VA 22313-1450
www.uspto.gov

DUNLAP CODDING & ROGERS
PO BOX 16370
OKLAHOMA CITY, OK 73113

COPY MAILED

OCT 2 6 2005

OFFICE OF PETITIONS

In re Application of	:	
William H. Hildebrand et al	:	
Application No. 10/022,066	:	ON PETITION
Filed: December 18, 2001	:	
Attorney Docket No. 6680.034	:	

This is a decision on the petition under 37 CFR 1.137(b), filed October 11, 2005, to revive the above-identified application.

The petition is **GRANTED**.

The above-identified application became abandoned for failure to reply within the meaning of 37 CFR 1.113 in a timely manner to the final Office action mailed October 4, 2004, which set a shortened statutory period for reply of three (3) months. A reply under 37 CFR 1.113 is limited to an amendment that *prima facie* places the application in condition for allowance or a Notice of Appeal (and appeal fee required by 37 CFR 1.17(b)). The amendment submitted on October 21, 2004, did not *prima facie* place the application in condition for allowance as noted in the Advisory Action mailed March 11, 2005. Therefore, as no Notice of Appeal (and appeal fee), Request for Continued Examination (RCE) or a continuing application was timely filed. Extension of time under the provisions of 37 CFR 1.136(a) was obtained. Accordingly, the above-identified application became abandoned on April 5, 2005.

The above-identified application is being revived solely for purposes of continuity. As continuity has been established by this decision reviving the above-identified application, the above-identified application is again abandoned in favor of a continuing application No. 11/247,423.

Telephone inquiries concerning this decision should be directed to Wan Laymon at (571) 272-3220.

This matter is being referred to Files Repository.

Wan Laymon

Wan Laymon
Petitions Examiner
Office of Petitions

UNITED STATES PATENT AND TRADEMARK OFFICE

Commissioner for Patents
United States Patent and Trademark Office
P. O. Box 1450
Alexandria, VA 22313-1450
www.uspto.gov

Paper No. 6

H. Dworetsky
AT&T CORP.
P.O. Box 4110
Middletown, NJ 07748-4110

COPY MAILED

MAY 2 2 2003

OFFICE OF PETITIONS

In re Application of :
Lawrence David Jackel et al :
Application No. 10/022,068 : DECISION GRANTING PETITION
Filed: December 17, 2001 : UNDER 37 CFR 1.137(f)
Attorney Docket No. 2000-0505 :

This is a decision on the petition, filed May 12, 2003, to revive the instant nonprovisional application under the unintentional provisions of 37 CFR 1.137(f).

The petition is **GRANTED**.

Petitioner states that the instant nonprovisional application is the subject of an application filed in a foreign country on December 10, 2002. However, the U.S. Patent and Trademark Office was unintentionally not notified of this filing within 45 days subsequent to the filing of the subject application in a foreign country.

In view of the above, this application became abandoned pursuant to 35 U.S.C. § 122(b)(2)(B)(iii) and 37 CFR 1.213(c) for failure to timely notify the Office of the filing of an application in a foreign country, or under a multilateral international agreement, that requires publication of applications 18 months after filing.

A petition under 37 CFR 1.137(f) must be accompanied by:

(1) the reply which is met by the notification of such filing in a foreign country or under a multinational treaty;

(2) the petition fee as set forth in 37 CFR 1.17(m); and

(3) a statement that the entire delay in filing the

required reply from the due date of the reply until the filing of a grantable petition was unintentional.

The instant petition has been found to be in compliance with 37 CFR 1.137(f). Accordingly, the failure to timely notify the Office of a foreign or international filing within 45 days after the date of filing of such foreign or international application as provided by 35 U.S.C. § 122(b)(2)(B)(iii) and 37 CFR 1.213(c) is accepted as having been unintentionally delayed.

The previous Request and Certification under 35 U.S.C. § 122(b)(2)(B)(i) has been previously rescinded.

Any inquiries concerning this decision may be directed to the undersigned at (703) 305-8680.

This application is being forwarded to Technology Center Art Unit 2612 for examination in due course.

Frances Hicks

Frances Hicks
Petitions Examiner
Office of Petitions
Office of the Deputy Commissioner
for Patent Examination Policy

UNITED STATES PATENT AND TRADEMARK OFFICE

Commissioner for Patents
United States Patent and Trademark Office
Washington, D.C. 20231
www.uspto.gov

SCOTT A. OULETTE
EMC CORPORATION
OFFICE OF THE GENERAL COUNSEL
176 SOUTH STREET
HOPKINTON, MA 01748

COPY MAILED

AUG 2 4 2005

OFFICE OF PETITIONS

In re Application of	:	
John K. Walton et al.	:	
Application No. 10/022,080	:	DECISION ON PETITION
Filed: December 13, 2001	:	37 CFR 1.137(b)
Attorney Docket No. EMC-01-153	:	

This is a decision on the petition under 37 CFR §1.137(b), submitted August 18, 2004, to revive the above-identified application.

The petition is **GRANTED**.

This application became abandoned for failure to submit the issue fee in a timely manner in reply to the Notice of Allowance and Fee(s) Due mailed March 25, 2003, which set a statutory period for reply of three (3) months. A Notice of Allowability was mailed on March 24, 2003 requiring formal drawings. The Notice of Allowability set a statutory period of three (3) months to comply with the requirements of the instant Notice. Accordingly, the application became abandoned for failure to submit the issue fee on June 26, 2003 (Saturday), deferred until the next business day on June 28, 2003 (Monday). The applicant filed a response on July 29, 2003 requesting reconsideration of the drawing requirement. A Supplemental Notice of Allowability was mailed in reply to the response, without restarting the statutory period, accepting the originally filed drawings. A Notice of Abandonment was mailed on July 30, 2003 to the address of record.

The petition therefore satisfies the conditions for revival pursuant to the provisions of 37 CFR §1.137(b) in that (1) the issue fee ($1330) at the time of filing the petition; (2) the petition fee of $1330.00 (for a large entity) at the time of filing the petition; and (3) the required statement of unintentional delay have been received. The application was filed with a nonpublication request in compliance with 37 CFR 1.211, and was not charged a publication fee. Accordingly, the reply to the Notice of Allowance mailed March 25, 2003 is accepted as having been unintentionally delayed.

This matter is being referred to the Office of Patent Publications to be processed into a patent.

Telephone inquiries concerning this decision should be directed to Angela Ortiz at (571) 272-6051, or in her absence, the undersigned at (571) 272-3217.

Frances Dickey for

Brian Hearn
Petitions Examiner
Office of Petitions
Office of the Deputy Commissioner
for Patent Examination Policy

SPE RESPONSE FOR CERTIFICATE OF CORRECTION

Paper No.: X

DATE : **April 22, 2008**

TO SPE OF : ART UNIT **2611**

SUBJECT : Request for Certificate of Correction for Appl. No.: **10/022083** Patent No.: **7269198 B1**

A response is requested with respect to a request for a certificate of correction.

With respect to the change(s) requested to correct Office and/or Applicant's errors, should the patent read as shown in the certificate of correction attached herewith or the COCIN document(s), in IFW images for the above-identified patented application? No new matter should be introduced, nor should the scope or meaning of the claims be changed.

If the response is for an IFW, within **7** days, please complete and forward the response, to the employee (named below) via scanning into application images, using document code **COCX**.

DO NOT SENT TO ATTORNEY

If the response is for a paper file wrapper, please complete the response and forward the response with the paper file wrapper, to the employee (named below), within **7** days, to:

Certificates of Correction Branch (CofC)
South Tower - 9A22
Palm Location 7580

You can fax the Directors/SPE response to 571-270-9990

LAMONTE NEWSOME
Certificates of Correction Branch
703-308-9390 ext. 112

Thank You For Your Assistance

The request for issuing the above-identified correction(s) is hereby:
Note your decision on the appropriate box.

- ☒ **Approved** — **All** changes apply.
- ☐ **Approved in Part** — Specify below which changes **do not** apply.
- ☐ **Denied** — State the reasons for denial below.

Comments: _____

Christ [illegible] 2611

SPE **Art Unit**

UNITED STATES PATENT AND TRADEMARK OFFICE

Commissioner for Patents
United States Patent and Trademark Office
P.O. Box 1450
Alexandria, VA 22313-1450
www.uspto.gov

TOWNSEND AND TOWNSEND AND CREW, LLP
TWO EMBARCADERO CENTER
EIGHTH FLOOR
SAN FRANCISCO CA 94111-3834

COPY MAILED

JAN 2 6 2005

OFFICE OF PETITIONS

ON PETITION

In re Application of	:
Sawyers, et al.	:
Application No. 10/022,115	:
Filed: December 14, 2001	:
Attorney Docket No. 02307K-141312US	:

This is a decision on the petition under 37 CFR §1.183 requesting waiver of 37 CFR §§ 1.67 and 1.63 where they require that a supplemental declaration be executed by all named inventors. The petition was filed on January 6, 2005 (certificate of mailing date January 3, 2005).

The petition under 37 CFR §1.183 requesting waiver of 37 CFR §§ 1.67 and 1.63 is **granted**.

In view of the successful mailing of the supplemental Declaration to Dr. Karen A. Klein and her lack of response to the request that she sign the supplemental Declaration and return it, it is agreed that justice would be served by waiving the requirement for her signature on the supplemental Declaration filed January 6, 2005 (certificate of mailing date January 3, 2005).

The aforementioned supplemental declaration has been accepted, on petition, and placed in the file.

This application is being returned to Technology Center G.A.U. 1632 for consideration of the amendment filed January 6, 2005 (certificate of mailing date January 3, 2005).

Telephone inquiries related to this decision should be directed to the undersigned at (571) 272-3230.

E. Shirene Willis
Senior Petitions Attorney
Office of Petitions
Office of the Deputy Commissioner
for Patent Examination Policy

UNITED STATES PATENT AND TRADEMARK OFFICE

#11

COMMISSIONER FOR PATENTS
UNITED STATES PATENT AND TRADEMARK OFFICE
P.O. BOX 1450
ALEXANDRIA, VA 22313-1450
www.uspto.gov

MAILED

JUN 1 2004

Office of the Director
Group 3600

Sidley Austin Brown & Wood LLP
717 North Harwood
SUITE 3400
Dallas, TX 75201

In re Application of
Roger A. Bullivant
Application No. 10/022,131
Filed: December 13, 2001
For: CONNECTOR

DECISION ON PETITION TO WITHDRAW THE HOLDING OF ABANDONMENT

This is in reply to applicant's petition to withdraw the holding of abandonment under 37 CFR 1.181, filed in the United States Patent and Trademark Office on March 24, 2004.

The petition is **GRANTED** in view of the following evidence of timely filing :

☐ Postcard receipt being dated_____.

☐ USPTO return facsimile receipt dated _____ which identifies the application by serial number and the type of Response that was filed on that date.

☒ Certificate of Mailing/Transmission signed on September 23, 2003 and supported by a statement under 37 C.F.R. 1.8(b)(3).

☐ Hand Delivery Receipt of the specific documents submitted dated _____.

☐ Certificate of Transmission of CPA under 37 C.F.R. 1.6 filed on _____.

☐ Express Mail Receipt under 37 C.F.R. 1.10 dated _____.

This application is being forwarded to the Supervisory Legal Instruments Examiner for entry of the response filed with the petition, then to the examiner for prompt action on the response.

KJD/vdb: 5/27/04

KENNETH J. DORNER
SPECIAL PROGRAMS EXAMINER
TECHNOLOGY CENTER 3600

UNITED STATES PATENT AND TRADEMARK OFFICE

UNITED STATES DEPARTMENT OF COMMERCE
United States Patent and Trademark Office
Address: COMMISSIONER FOR PATENTS
P.O. Box 1450
Alexandria, Virginia 22313-1450
www.uspto.gov

APPLE INC./BSTZ
BLAKELY SOKOLOFF TAYLOR & ZAFMAN LLP
1279 OAKMEAD PARKWAY
SUNNYVALE, CA 94085-4040

Mail Date: 04/21/2010

Applicant	: Xiaochun Nie	: DECISION ON REQUEST FOR
Patent Number	: 7631277	: RECALCULATION of PATENT
Issue Date	: 12/08/2009	: TERM ADJUSTMENT IN VIEW
Appliction No	: 10/022,151	: OF WYETH AND NOTICE OF INTENT TO
Filed	: 12/14/2001	: ISSUE CERTIFICATE OF CORRECTION
		:

The Request for Recalculation is **GRANTED** to the extent indicated.

The patent term adjustment has been determined to be **1055** days. The USPTO will *sua sponte* issue a certificate of correction reflecting the amount of PTA days determined by the recalculation.

Prior to the issuance of the certificate of correction, the USPTO will afford patentee an opportunity to be heard and request reconsideration. Accordingly, patentee has **one month or thirty (30) days**, whichever is longer, to file a request for reconsideration of this patent term adjustment calculation. See 35 U.S.C. 154(b)(3)(B)(ii) and 37 CFR 1.322(a)(4). No extensions of time will be granted under 37 CFR 1.136.

Patentee should use document code PET.OP if electronically filing a request for reconsideration of this patent term adjustment calculation. The patentee must also include the information required by 37 CFR 1.705(b)(2) and the fee required by 37 CFR 1.18(e). If patentee does not file a timely request for reconsideration of this patent term adjustment calculation including the information required by 37 CFR 1.705(b)(2) and the fee required by 37 CFR 1.18(e), the USPTO will issue a certificate of correction reflecting the PTA determination noted above.

Patentee should be aware that in order to preserve the right to review in the United States District Court for the District of Columbia of the USPTO patent term adjustment determination, patentee must ensure that he or she also take the steps required under 35 U.S.C. 154(b)(4)(A) in a timely manner. Nothing in the request for recalculation should be construed as providing an alternative time frame for commencing a civil action under 35 U.S.C. 154(b)(4)(A).

Any questions concerning this decision should be directed to the Office of Patent Legal Administration at 571-272-7702.

SPE RESPONSE FOR CERTIFICATE OF CORRECTION

Paper No.: _____

DATE : August 02, 2005

TO SPE OF : ART UNIT 1743 (*Exr. is Brian Sines*)

SUBJECT : Request for Certificate of Correction on Patent No.: 6,881,317

A response is requested with respect to the accompanying request for a certificate of correction.

Please complete this form and return with file, within **7** days to:

Palm location 7580, Certificates of Correction Branch – South Tower – 9A22

If response is for an IFW, **return to employee (named below) via PUBSCofC Team in MADRAS.**

With respect to the change(s) requested, correcting Office and/or Applicant's errors, should the patent read as shown in the certificate of correction (COCIN)? No new matter should be introduced, nor should the scope or meaning of the claims be changed.

As submitted in IFW message – see IFW cocin re: Reference omitted!

sp S'Tru

Thank You For Your Assistance

Certificates of Correction Branch

Tel. No. 703-308-9390 x120

The request for issuing the above-identified correction(s) is hereby:

Note your decision on the appropriate box.

- ☒ **Approved** — **All** changes apply.
- ☐ **Approved in Part** — Specify below which changes **do not** apply.
- ☐ **Denied** — State the reasons for denial below.

Comments:

_____

_____

_____

_____

_____

JHWard — **SPE**

1743 — **Art Unit**

UNITED STATES PATENT AND TRADEMARK OFFICE

Commissioner for Patents
United States Patent and Trademark Office
P.O. Box 1450
Alexandria, VA 22313-1450
www.uspto.gov

WOOD, HERRON & EVANS, LLP
2700 CAREW TOWER
441 VINE STREET
CINCINNATI OH 45202

MAILED

MAY 1 2 2009

OFFICE OF PETITIONS

In re Application of	:	
Bryan M. Elwood, et al.	:	
Application No. 10/022,194	:	DECISION ON PETITION
Filed: December 20, 2001	:	
Attorney Docket No. TFLED-875US	:	

This is a decision on the petition under the unintentional provisions of 37 CFR 1.137(b), filed March 10, 2009, to revive the above-identified application.

The petition is **GRANTED**.

This application became abandoned for failure to timely pay the issue and publication fees on or before January 20, 2009, as required by the Notice of Allowance and Fee(s) Due, mailed October 17, 2008. Accordingly, the date of abandonment of this application is January 21, 2009. The Notice of Abandonment was mailed February 10, 2009.

The petition satisfies the requirements of 37 CFR 1.137(b) in that petitioner has supplied (1) the reply in the form of payment of the issue fee of $1,510 and the publication fee of $300, (2) the petition fee of $1,620; and (3) a proper statement of unintentional delay.

Telephone inquiries concerning this decision should be directed to Terri Williams at (571) 272-2991.

This application is being referred to Office of Data Management for processing into a patent.

Brian Brown
Petitions Examiner
Office of Petitions

UNITED STATES PATENT AND TRADEMARK OFFICE

Commissioner for Patents
United States Patent and Trademark Office
P.O. Box 1450
Alexandria, VA 22313-1450
www.uspto.gov

JUL 25 2007

FISH & RICHARDSON, PC
P.O. BOX 1022
MINNEAPOLIS MN 55440-1022

In re Application of	:
Vega et al.	:
Serial No.: 10/022,249	: PETITION DECISION
Filed: December 17, 2001	:
Attorney Docket No.: 17109-002001 / 911	:

This is in response to the petition under 37 CFR § 1.181, filed May 25, 2007, requesting reconsideration and removal of the finality of the Office action of May 9, 2007.

BACKGROUND

The examiner mailed a non-final Office action on September 7, 2006, setting a three month shortened statutory period for reply. In this action, claim 4 was objected to for being in improper dependent form. Claims 1-21 and 42-44 were rejected under 35 U.S.C. 112, second paragraph as being indefinite. Claims 1-6, 8-23, 30, 32, 33, and 42-44 were rejected under 35 U.S.C. 102 (b) as being anticipated by Giver et al. Claims 32 and 33 were rejected under 35 U.S.C. 103 (a) as being unpatentable over Giver et al. Claims 7, 24, and 27-29 were rejected under 35 U.S.C. 103 (a) as being unpatentable over Giver et al. in view of Berlioz et al. Claims 25 and 26 were rejected under 35 U.S.C. 103 (a) as being unpatentable over Giver et al. in view of Berlioz et al., further in view of Rivet et al. Claim 31 was rejected under 35 U.S.C. 103 (a) as being unpatentable over Giver et al. in view of Persson et al.

In response to the non-final Office action of September 7, 2006, applicants amended claims 1, 14, 15, 22-24, 27, 30, and 42-44. Claims 4, 11, and 13 were cancelled. Applicants also argued the rejections set forth in the action.

The examiner mailed a final Office action on May 9, 2007, setting a three month shortened statutory period for reply. In this Office action, claims 1-3, 5, 6, 8-10, 12, 14-21, 22, 23, 32 and 33 were newly rejected under 35 U.S.C. 103 (a) as being unpatentable over Blazquez et al in view of Giver et al. Claims 7, 24, and 27-29 were newly rejected under 35 U.S.C. 103 (a) as being unpatentable over Blazquez et al in view of Giver et al., and further in view of Berlioz et al. Claim 25 and 26 were newly rejected under 35 U.S.C. 103 (a) as being unpatentable over Blazquez et al in view of Giver et al., in view of Berlioz et al., and further in view of Rivet et al.

Claims 30 and 31 were newly rejected under 35 U.S.C. 103 (a) as being unpatentable over Blazquez et al in view of Giver et al., and further in view of Persson et al.

In response thereto, applicants filed this petition requesting reconsideration and removal of the finality of the Office action of May 9, 2007.

DISCUSSION

Applicants argue the final Office action of May 9, 2007, introduces a new ground of rejection under 35 U.S.C. 103 (a) that could have been applied in a previous Office action. Hence, applicants point out it was not necessitated by amendment and should not have been made final.

Applicants' argument is persuasive. The examiner has newly rejected the claims over Blazquez et al. in view of Giver et al. Applicants point out that in response to the first Office action, claim 1 was amended to incorporate the limitations of claim 13, which stated the nucleic acid molecules in each set are produced by changing one codon in the target protein to a pre-selected codon, whereby the nucleic acid molecules in each set encode proteins. Applicants point out that claim 2 depends from claim 1, and recites that the set of nucleic acid molecules is individually designed and synthesized. Hence, claim 2 as pending is essentially the same as previously pending claim 13. Applicants also point out that the new ground of rejection is set forth because it allegedly addresses the limitations added to claim 1, and hence dependent claims such as claim 2. However, as pointed out by applicants, this limitation was previously in claim 13, which is essentially the same as claim 2. Thus, it could have been so-rejected. As a result, applicants arguments are persuasive.

DECISION

DECISION

The petition is **GRANTED.**

This application will be forwarded to the examiner for an action not inconsistent with this decision.

Should there be any questions about this decision please contact Marianne C. Seidel, by letter addressed to Director, TC 1600, at the address listed above, or by telephone at 571-272-0584 or by facsimile sent to the general Office facsimile number, 703-872-9306.

Christopher Low

Christopher Low
Acting Director, Technology Center 1600

UNITED STATES PATENT AND TRADEMARK OFFICE

Commissioner for Patents
United States Patent and Trademark Office
P.O. Box 1450
Alexandria, VA 22313-1450
www.uspto.gov

Paper No.

COPY MAILED

NOV 18 2009

OFFICE OF PETITIONS

K&L Gates LLP
3580 Carmel Mountain Road
Suite 200
San Diego CA 92130

In re Application of :
Vega et al. :
Application No. 10/022,249 : LETTER REGARDING
Filed: December 17, 2001 : PATENT TERM ADJUSTMENT
Atty Docket No. 3800073.00002 :
/ 911 :

This letter is in response to the "LETTER REGARDING PATENT TERM ADJUSTMENT AT ALLOWANCE PURSUANT TO COMMENT 43 OF THE FINAL RULE" filed September 24, 2009. Pursuant to their duty of good faith and candor to the Office, applicants disclose that the patent term adjustment of 76 days included in the Notice of Allowance and Determination of Patent Term Adjustment mailed August 13, 2009 may be longer than appropriate.

The request for correction of the initial determination of patent term adjustment (PTA) is **GRANTED**.

The Office has updated the PALM screen to reflect that the correct Patent Term Adjustment (PTA) determination at the time of the mailing of the Notice of Allowance is zero **(0)** days. A copy of the updated PALM screen, showing the correct determination, is enclosed.

On August 13, 2009, the Office mailed the Determination of Patent Term Adjustment under 35 U.S.C. 154(b) in the above-identified application. The Notice stated that the patent term adjustment to date is 76 days. Applicants disclose that a period of reduction should have been entered for the supplemental information disclosure statement filed March 2, 2007 as it was filed after the response filed November 22, 2006 and did not contain a § 1.704(d) statement.

A review of the record confirms that a period of reduction should have been entered for the filing of the supplemental IDS on March 2, 2007.

37 CFR 1.704 (c) provides that:

> Circumstances that constitute a failure of the applicant to engage in reasonable efforts to conclude processing or examination of an application also include the following circumstances, which will result in the following reduction of the period of adjustment set forth in § 1.703 to the extent that the periods are not overlapping:
>
> > (8) Submission of a supplemental reply or other paper, other than a supplemental reply or other paper expressly requested by the examiner, after a reply has been filed, in which case the period of adjustment set forth in § 1.703 shall be reduced by the number of days, if any, beginning on the day after the date the initial reply was filed and ending on the date that the supplemental reply or other such paper was filed;

In this instance, applicants filed a response to a non-final rejection on November 22, 2006. Thereafter, on March 2, 2007, applicants filed the supplemental IDS. As acknowledged by applicants, the supplemental IDS did not include the proper §1.704(d) statement. Further, the IDS was not expressly requested by the examiner. Accordingly, pursuant to § 1.704(c)(8), an additional period of reduction of 100 days is being entered for the period beginning on November 23, 2006, the day after the initial reply was filed and ending on March 2, 2007, the date of filing of the IDS.

With respect to applicants' other comments, applicants should note that the Office took action within the meaning of 37 CFR 1.702(a)(2) on May 9, 2007. The fact that the Office mailed another Office action on August 30, 2007, in response to the petition to withdraw the finality of the May 9, 2007, which only withdrew the finality, does not negate the fact that the Office first mailed an action under 35 U.S.C. §132 in response on May 9, 2007. Accordingly, Office delay in taking action in response to the reply filed November 22, 2006 was properly calculated based on the mailing of an Office action on May 9, 2007. Entry of an additional period of adjustment for Office delay is not warranted.

In view thereof, it is concluded that the determination of patent term adjustment at the time of the mailing of the notice of allowance is zero (0) days.

As this letter was submitted as an advisement to the Office of an error in applicants' favor, the Office will not assess the $200.00 fee under 37 CFR 1.18(e). The Office thanks applicants for their good faith and candor in bringing this to the attention of the Office.

Applicants are reminded that any delays by the Office pursuant to 37 CFR 1.702(a)(4) and 1.702(b) and any applicant delays under 37 CFR 1.704(c)(10) will be calculated at the time of the issuance of the patent and applicants will be notified of the revised patent term adjustment to be indicated on the patent in the Issue Notification letter that is mailed to applicants approximately three weeks prior to issuance.

The Office of Data Management has been advised of this decision. This matter is being referred to the Office of Data Management for issuance of the patent.

Telephone inquiries specific to this matter should be directed to the undersigned at (571) 272-3219.

Nancy Johnson
Senior Petitions Attorney
Office of Petitions

Enclosure: Copy of revised PALM Screen

Day : Friday
Date: 11/6/2009

PALM INTRANET

Time: 13:29:28

PTA Calculations for Application: 10/022249			
Application Filing Date:	12/17/2001	PTO Delay (PTO):	426
Issue Date of Patent:		Three Years:	0
Pre-Issue Petitions:	0	Applicant Delay (APPL):	350
Post-Issue Petitions:	0	Total PTA (days):	0
PTO Delay Adjustment:	-100		

File Contents History

Number	Date	Contents Description	PTO	APPL	START
138	11/06/2009	ADJUSTMENT OF PTA CALCULATION BY PTO		100	
128	08/13/2009	MAIL NOTICE OF ALLOWANCE			
127	08/03/2009	ISSUE REVISION COMPLETED			
126	08/03/2009	DOCUMENT VERIFICATION			
125	08/03/2009	NOTICE OF ALLOWANCE DATA VERIFICATION COMPLETED			
124	08/03/2009	NOTICE OF ALLOWABILITY			
119	04/16/2009	INFORMATION DISCLOSURE STATEMENT CONSIDERED			
118	05/20/2009	DATE FORWARDED TO EXAMINER			
117	04/20/2009	RESPONSE AFTER NON-FINAL ACTION		94	114
116	04/20/2009	REQUEST FOR EXTENSION OF TIME - GRANTED			
115	04/16/2009	INFORMATION DISCLOSURE STATEMENT (IDS) FILED			
114	10/16/2008	MAIL NON-FINAL REJECTION			
113	10/14/2008	NON-FINAL REJECTION			
112	07/10/2008	INFORMATION DISCLOSURE STATEMENT CONSIDERED			
111	07/10/2008	INFORMATION DISCLOSURE STATEMENT (IDS) FILED			
110	07/28/2008	DATE FORWARDED TO EXAMINER			
109	07/07/2008	AMENDMENT SUBMITTED/ENTERED WITH FILING OF CPA/RCE			
108	07/28/2008	DATE FORWARDED TO EXAMINER			
107	07/07/2008	REQUEST FOR CONTINUED EXAMINATION (RCE)			
106	07/28/2008	DISPOSAL FOR A RCE/CPA/129 (EXPRESS			

		ABANDONMENT IF CPA)			
105	07/10/2008	INFORMATION DISCLOSURE STATEMENT (IDS) FILED			
104	07/07/2008	WORKFLOW - REQUEST FOR RCE - BEGIN			
103	05/23/2008	CHANGE IN POWER OF ATTORNEY (MAY INCLUDE ASSOCIATE POA)			
102	05/20/2008	CORRESPONDENCE ADDRESS CHANGE			
101	05/13/2008	MAIL FINAL REJECTION (PTOL - 326)			
100	05/12/2008	FINAL REJECTION			
99	02/07/2008	INFORMATION DISCLOSURE STATEMENT CONSIDERED			
95	03/07/2008	DATE FORWARDED TO EXAMINER			
94	02/07/2008	RESPONSE AFTER NON-FINAL ACTION		69	87
93	02/07/2008	REQUEST FOR EXTENSION OF TIME - GRANTED			
92	02/07/2008	REFERENCE CAPTURE ON IDS			
91	02/07/2008	INFORMATION DISCLOSURE STATEMENT (IDS) FILED			
90	02/07/2008	INFORMATION DISCLOSURE STATEMENT (IDS) FILED			
88	08/30/2007	MAIL NOTICE OF WITHDRAWN ACTION			
87	08/30/2007	MAIL NON-FINAL REJECTION			
86	08/29/2007	NON-FINAL REJECTION			
85	08/29/2007	LETTER WITHDRAWING / VACATING OFFICE ACTION			
84	07/26/2007	MAIL-PETITION DECISION - GRANTED			
83	02/05/2007	PETITION ENTERED			
82	07/26/2007	MAIL-PETITION DECISION - GRANTED			
81	05/25/2007	PETITION ENTERED			
80	05/09/2007	MAIL FINAL REJECTION (PTOL - 326)	48		75
79	05/07/2007	FINAL REJECTION			
78	03/02/2007	INFORMATION DISCLOSURE STATEMENT CONSIDERED			
77.7	03/02/2007	INFORMATION DISCLOSURE STATEMENT (IDS) FILED			
77	03/02/2007	INFORMATION DISCLOSURE STATEMENT (IDS) FILED			
76	03/05/2007	DATE FORWARDED TO EXAMINER			
75	11/22/2006	RESPONSE AFTER NON-FINAL ACTION			
74	01/30/2007	CHANGE IN POWER OF ATTORNEY (MAY			

		INCLUDE ASSOCIATE POA)			
73	09/07/2006	MAIL NON-FINAL REJECTION			
72	09/05/2006	NON-FINAL REJECTION			
71	11/13/2002	INFORMATION DISCLOSURE STATEMENT CONSIDERED			
70	06/22/2006	INFORMATION DISCLOSURE STATEMENT CONSIDERED			
69.7	06/22/2006	INFORMATION DISCLOSURE STATEMENT (IDS) FILED			
69	06/22/2006	INFORMATION DISCLOSURE STATEMENT (IDS) FILED			
68	06/30/2006	DATE FORWARDED TO EXAMINER			
67	06/22/2006	AMENDMENT SUBMITTED/ENTERED WITH FILING OF CPA/RCE			
66	06/30/2006	DATE FORWARDED TO EXAMINER			
65	06/22/2006	REQUEST FOR CONTINUED EXAMINATION (RCE)			
64	06/30/2006	DISPOSAL FOR A RCE/CPA/129 (EXPRESS ABANDONMENT IF CPA)			
62	06/22/2006	WORKFLOW - REQUEST FOR RCE - BEGIN			
61	11/13/2002	REFERENCE CAPTURE ON IDS			
60.7	11/13/2002	INFORMATION DISCLOSURE STATEMENT (IDS) FILED			
60	11/13/2002	INFORMATION DISCLOSURE STATEMENT (IDS) FILED			
59	09/03/2002	CORRECTED FILING RECEIPT			
58	04/17/2006	MAIL FINAL REJECTION (PTOL - 326)			
57	04/14/2006	FINAL REJECTION			
56	03/30/2006	CHANGE IN POWER OF ATTORNEY (MAY INCLUDE ASSOCIATE POA)			
55	02/14/2006	DATE FORWARDED TO EXAMINER			
54	02/01/2006	RESPONSE AFTER NON-FINAL ACTION			
53	12/23/2005	MAIL NON-FINAL REJECTION			
52	12/20/2005	NON-FINAL REJECTION			
51	11/02/2005	CASE DOCKETED TO EXAMINER IN GAU			
50	10/12/2005	DATE FORWARDED TO EXAMINER			
49	09/01/2005	AMENDMENT SUBMITTED/ENTERED WITH FILING OF CPA/RCE			
48	10/12/2005	DATE FORWARDED TO EXAMINER			
47	09/01/2005	REQUEST FOR CONTINUED EXAMINATION			

		(RCE)			
46	10/12/2005	DISPOSAL FOR A RCE/CPA/129 (EXPRESS ABANDONMENT IF CPA)			
45	09/01/2005	WORKFLOW - REQUEST FOR RCE - BEGIN			
44	08/23/2005	MAIL ADVISORY ACTION (PTOL - 303)			
43	08/08/2005	ADVISORY ACTION (PTOL-303)			
42.7	06/05/2003	INFORMATION DISCLOSURE STATEMENT (IDS) FILED			
42	06/05/2003	INFORMATION DISCLOSURE STATEMENT (IDS) FILED			
41	07/24/2005	CASE DOCKETED TO EXAMINER IN GAU			
40	07/24/2005	CASE DOCKETED TO EXAMINER IN GAU			
39	07/20/2005	IFW TSS PROCESSING BY TECH CENTER COMPLETE			
38	07/20/2005	DATE FORWARDED TO EXAMINER			
37	07/13/2005	AMENDMENT AFTER FINAL REJECTION			
36	09/10/2002	POWER TO MAKE COPIES AND/OR INSPECT			
34	03/07/2002	PRELIMINARY AMENDMENT			
33	06/15/2005	MAIL FINAL REJECTION (PTOL - 326)			
32	06/13/2005	FINAL REJECTION			
31	03/31/2005	DATE FORWARDED TO EXAMINER			
30	03/14/2005	RESPONSE AFTER NON-FINAL ACTION		55	24
29	03/14/2005	REQUEST FOR EXTENSION OF TIME - GRANTED			
28	03/15/2005	REFERENCE CAPTURE ON IDS			
27.7	03/15/2005	INFORMATION DISCLOSURE STATEMENT (IDS) FILED		1	30
27	03/15/2005	INFORMATION DISCLOSURE STATEMENT (IDS) FILED			
26	11/03/2004	REFERENCE CAPTURE ON IDS			
25.7	11/03/2004	INFORMATION DISCLOSURE STATEMENT (IDS) FILED			
25	11/03/2004	INFORMATION DISCLOSURE STATEMENT (IDS) FILED			
24	10/18/2004	MAIL NON-FINAL REJECTION			
23	10/14/2004	NON-FINAL REJECTION			
22	08/13/2004	DATE FORWARDED TO EXAMINER			
21	07/30/2004	RESPONSE TO ELECTION / RESTRICTION FILED		59	17
20	07/30/2004	REQUEST FOR EXTENSION OF TIME - GRANTED			

19	07/30/2004	WORKFLOW INCOMING AMENDMENT IFW			
18	06/24/2004	CORRESPONDENCE ADDRESS CHANGE			
17	03/01/2004	MAIL RESTRICTION REQUIREMENT	378		-1
16	03/01/2004	REQUIREMENT FOR RESTRICTION / ELECTION			
15	12/15/2003	MISCELLANEOUS INCOMING LETTER			
14	09/09/2002	CORRESPONDENCE ADDRESS CHANGE			
13	08/08/2002	CASE DOCKETED TO EXAMINER IN GAU			
12	08/05/2002	APPLICATION DISPATCHED FROM OIPE			
11	08/05/2002	APPLICATION IS NOW COMPLETE			
10	07/22/2002	ADDITIONAL APPLICATION FILING FEES		72	7
9	07/22/2002	A STATEMENT BY ONE OR MORE INVENTORS SATISFYING THE REQUIREMENT UNDER 35 USC 115, OATH OF THE APPLIC			
8	07/22/2002	APPLICANT HAS SUBMITTED NEW DRAWINGS TO CORRECT CORRECTED PAPERS PROBLEMS			
7	02/11/2002	NOTICE MAILED--APPLICATION INCOMPLETE--FILING DATE ASSIGNED			
5	02/06/2002	CRF IS GOOD TECHNICALLY / ENTERED INTO DATABASE			
4	01/12/2002	IFW SCAN & PACR AUTO SECURITY REVIEW			
3	01/07/2002	IFW SCAN & PACR AUTO SECURITY REVIEW			
2	12/17/2001	CRF DISK HAS BEEN RECEIVED BY PREEXAM / GROUP / PCT			
1	12/17/2001	INITIAL EXAM TEAM NN			

Search Another: Application# Search

EXPLANATION OF PTA CALCULATION

EXPLANATION OF PTE CALCULATION

To go back, right click here and select Back. To go forward, right click here and select Forward. To refresh, right click here and select Refresh.

Back to OASIS | Home page

UNITED STATES PATENT AND TRADEMARK OFFICE

COMMISSIONER FOR PATENTS
UNITED STATES PATENT AND TRADEMARK OFFICE
P.O. BOX 1450
ALEXANDRIA, VA 22313-1450
www.uspto.gov

Paper No.

FISH & RICHARDSON P.C.
P.O. BOX 1022
MINNEAPOLIS, MN 55440-1022

COPY MAILED

JUL 12 2005

OFFICE OF PETITIONS

In re Application of	:	
Yamazaki et al.	:	LETTER REGARDING
Application No. 10/022,262	:	PATENT TERM ADJUSTMENT
Filed: December 20, 2001	:	
Atty Docket No. 12732-086001	:	
	:	

This letter is in response to the "LETTER REGARDING PATENT TERM ADJUSTMENT PURSUANT TO COMMENT 43 OF THE FINAL RULE (09/18/2000)," filed January 31, 2005.

The request for correction of the initial determination of patent term adjustment (PTA) is **granted**.

The Office has updated the PAIR screen to reflect that the correct Patent Term Adjustment determination at the time of the mailing of the Notice of Allowance was ZERO (0) days. A copy of the updated PAIR screen, showing the correct determination, is enclosed.

On December 10, 2004, the Office mailed the Determination of Patent Term Adjustment under 35 U.S.C. 154(b) in the above-identified application. The Notice stated that the patent term adjustment to date is 24 days. Applicants state no basis for their request to review the patent term adjustment calculations.

Nonetheless, a review of the record reveals that 2 additional periods of reduction should have been entered in this application. First, the Office did not receive a response to the final rejection mailed October 6, 2003, until applicants filed a request for continued examination (RCE) on February 6, 2004, three months and 31 days later. Pursuant to § 1.704(b), a reduction of 31 days should have been entered for this delay.

Moreover, 37 CFR § 1.704(c)(8) provides that:

> submission of a supplemental reply or other paper, other than a supplemental reply or other paper expressly requested by the examiner, after a reply has been filed, is a failure to engage in reasonable efforts to conclude prosecution.

On June 14, 2004, applicants filed a response after non-final Office action. Then, on November 30, 2004, applicants filed an Information Disclosure Statement (IDS). The record does not support a conclusion that the IDS was expressly requested by the examiner. Nor was the IDS accompanied by a § 1.704(d) statement. Accordingly, the PTA should have been reduced pursuant to § 1.704(c)(8). Specifically, the PTA should have been reduced by 168 days, the number of days beginning on the day after the date the initial reply was filed, June 15, 2004, and ending on the date that the supplemental paper was filed, November 30, 2004 for the filing of the IDS.

In view thereof, the correct determination of PTA at the time of the mailing of the Notice of Allowance is ZERO (0) days (including 232 days of applicant delay).

As this letter was submitted as an advisement to the Office of an error in Applicants' favor, the Office will not assess the $200.00 application fee under 37 CFR 1.705(b). The Office thanks applicants for their good faith and candor in bringing this to the attention of the Office.

The Office of Patent Publication has been advised of this decision. The application is, thereby, forwarded to the Office of Patent Publication for issuance of the patent.

Telephone inquiries specific to this matter should be directed to Nancy Johnson, Senior Petitions Attorney, at (571) 272-3219.

Karin Ferriter
Senior Legal Advisor
Office of Patent Legal Administration
Office of Deputy Commissioner
for Patent Examination Policy

Enclosure: Copy of adjusted PAIR calculation

UNITED STATES PATENT AND TRADEMARK OFFICE

Commissioner for Patents
United States Patent and Trademark Office
P.O. Box 1450
Alexandria, VA 22313-1450
www.uspto.gov

MAILED

APR 13 2009

OFFICE OF PETITIONS

JONES DAY
222 EAST 41ST ST
NEW YORK NY 10017

In re Application of	:	
Gilles Gosselin et al.	:	
Application No. 10/022,276	:	DECISION ON PETITION
Filed: December 14,2001	:	
Attorney Docket No. 11874-030-999	:	

This is a decision on the petition under 37 CFR 1.182, filed, May 7, 2008, to rescind the Request for Non-Publication and Certification in the above-identified application.

The petition is **DISMISSED**.

The petition indicates a Request for Non-Publication and Certification Under 35 USC §122(b)(2)(B)(i) was filed on December 14, 2001. Further, petitioner indicates this request was inadvertently filed since the subject matter of the instant application was, in fact, previously filed and published under a multilateral agreement as WO 00/09531.

The instant application issued as patent No. 6,569,837 on May 27, 2003. As such, the PTO has no jurisdiction to make the request relief in a patent. In view of this, the petition under § 1.182 to rescind a Non-Publication Request cannot be granted.

As authorized, the $400 fee for the petition under 37 CFR 1.182 has been assessed to petitioner's deposit account.

Further correspondence with respect to this matter should be addressed as follows:

By mail: Mail Stop PETITIONS
Commissioner for Patents
Post Office Box 1450
Alexandria, VA 22313-1450

37 CFR 1.137(b)(3) requires a statement that "the entire delay in filing the required reply from the due date for the reply until the filing of a grantable petition pursuant to 37 CFR 1.137(b) was unintentional." Since the statement appearing in the document filed concurrently with this petition varies from the language required by 37 CFR 1.137(b)(3), the statement is being construed as the required statement. Petitioner must notify the Office if this is **not** a correct reading of the statement appearing in the petition.

Telephone inquiries concerning this decision should be directed to JoAnne Burke at (571) 272-4584.

This application is being referred to Technology Center AU 1624 for appropriate action by the Examiner in the normal course of business on the reply received.

Ramesh Krishnamurthy
Petitions Examiner
Office of Petitions

UNITED STATES PATENT AND TRADEMARK OFFICE

Commissioner for Patents
United States Patent and Trademark Office
P.O. Box 1450
Alexandria, VA 22313-1450
www.uspto.gov

MAILED

APR 13 2009

OFFICE OF PETITIONS

JONES DAY
222 EAST 41ST ST
NEW YORK NY 10017

In re Application of	:	
Gilles Gosselin et al.	:	
Application No. 10/022,276	:	DECISION ON PETITION
Filed: December 14,2001	:	
Attorney Docket No. 11874-030-999	:	

This is a decision on the petition under 37 CFR 1.182, filed, May 7, 2008, to rescind the Request for Non-Publication and Certification in the above-identified application.

The petition is **DISMISSED**.

The petition indicates a Request for Non-Publication and Certification Under 35 USC §122(b)(2)(B)(i) was filed on December 14, 2001. Further, petitioner indicates this request was inadvertently filed since the subject matter of the instant application was, in fact, previously filed and published under a multilateral agreement as WO 00/09531.

The instant application issued as patent No. 6,569,837 on May 27, 2003. As such, the PTO has no jurisdiction to make the request relief in a patent. In view of this, the petition under § 1.182 to rescind a Non-Publication Request cannot be granted.

As authorized, the $400 fee for the petition under 37 CFR 1.182 has been assessed to petitioner's deposit account.

Further correspondence with respect to this matter should be addressed as follows:

By mail: Mail Stop PETITIONS
Commissioner for Patents
Post Office Box 1450
Alexandria, VA 22313-1450

By hand: Customer Service Window
Mail Stop Petitions
Randolph Building
401 Dulany Street
Alexandria, VA 22314

By fax: (571) 273-8300
ATTN: Office of Petitions

Any questions concerning this matter may be directed to Carl Friedman at (571) 272-6842.

Anthony Knight
Supervisor
Office of Petitions

UNITED STATES PATENT AND TRADEMARK OFFICE

Commissioner for Patents
United States Patent and Trademark Office
P.O. Box 1450
Alexandria, VA 22313-1450
www.uspto.gov
DIW 03-05

MICHAEL C. CESARANO
SUNTRUST INTERNATIONAL CENTER, 28TH FLOOR
1 S.E. 3RD AVENUE
MIAMI FL 33131-1714

COPY MAILED
MAR 0 8 2005
OFFICE OF PETITIONS

In re Application of	:	
Aziz Rassi Neto	:	
Application No. 10/022,313	:	ON PETITION
Filed: 17 December, 2001	:	
Att'y Docket No. 162321	:	

This is a decision on the petition under 1.137(b),[1] filed on 8 February, 2005, to revive the above-identified application.

The petition is **GRANTED**.

This application became abandoned on 28 December, 2004, for failure to file a proper reply to the final Office action mailed on 27 July, 2004, which set a three (3) month shortened statutory period for reply. On 27 December, 2004, petitioner filed a two

---

[1]Effective December 1, 1997, the provisions of 37 CFR 1.137(b) now provide that where the delay in reply was unintentional, a petition may be filed to revive an abandoned application or a lapsed patent pursuant to 37 CFR 1.137(b). A grantable petition filed under the provisions of 37 CFR 1.137(b) must be accompanied by:

(1) the required reply, unless previously filed. In a nonprovisional application abandoned for failure to prosecute, the required reply may be met by the filing of a continuing application. In a nonprovisional application filed on or after June 8, 1995, and abandoned for failure to prosecute, the required reply may also be met by the filing of a request for continued examination in compliance with § 1.114. In an application or patent, abandoned or lapsed for failure to pay the issue fee or any portion thereof, the required reply must be the payment of the issue fee or any outstanding balance thereof. In an application abandoned for failure to pay the publication fee, the required reply must include payment of the publication fee.

(2) the petition fee as set forth in 37 CFR 1.17(m);

(3) a statement that the entire delay in filing the required reply from the due date for the reply until the filing of a grantable petition pursuant to 37 CFR 1.137(b) was unintentional. The Commissioner may required additional information where there is a question whether the delay was unintentional; and

(4) any terminal disclaimer (and fee as set forth in 37 CFR 1.20(d)) required pursuant to 37 CFR 1.137(c)).

(2) month extension of time under 37 CFR 1.136(a) along with an amendment after final rejection. The amendment was determined not to place the case in *prima facie* condition for allowance, however. An Advisory Action notifying applicant of such was mailed on 11 January, 2005. The filing of the present petition precedes the mailing of Notice of Abandonment.

Petitioner has submitted a Request for Continued Examination (RCE) with the present petition and has indicated that the previously filed amendment is the submission required by 37 CFR 1.114.

Petitioner should note that effective 8 December, 2004, the small-entity fee for a petition under 37 CFR 1.137(b) is $750.00. The balance of the fee due will be charged to counsel's deposit account, No. 50-0851, as authorized in the present petition.

The application is being referred to Technology Center Art Unit 3731 for further processing.

Telephone inquiries concerning this matter may be directed to the undersigned at (571)272-3231.

D Wood

Douglas I. Wood
Senior Petitions Attorney
Office of Petitions

UNITED STATES PATENT AND TRADEMARK OFFICE

Commissioner for Patents
United States Patent and Trademark Office
P.O. Box 1450
Alexandria, VA 22313-1450
www.uspto.gov
DW Dec-05

MICHAEL C. CESARANO
SUNTRUST INTERNATIONAL CENTER, 28TH FLOOR
1 S.E. 3RD AVENUE
MIAMI FL 33131-1714

COPY MAILED

DEC 0 2 2005

OFFICE OF PETITIONS

In re Application of	:	
Aziz Rassi Neto	:	
Application No. 10/022,313	:	DECISION ON PETITION
Filed: 17 December, 2001	:	
Atty Docket No. 162321	:	

This is a decision on the petition filed on 7 November, 2005, under 37 CFR 1.137(b),[1] to revive the above-identified application.

---

[1] Effective December 1, 1997, the provisions of 37 CFR 1.137(b) now provide that where the delay in reply was unintentional, a petition may be filed to revive an abandoned application or a lapsed patent pursuant to 37 CFR 1.137(b). A grantable petition filed under the provisions of 37 CFR 1.137(b) must be accompanied by:

(1) the required reply, unless previously filed. In a nonprovisional application abandoned for failure to prosecute, the required reply may be met by the filing of a continuing application. In a nonprovisional utility or plant application filed on or after June 8, 1995, and abandoned for failure to prosecute, the required reply may also be met by the filing of a request for continuing examination in compliance with § 1.114. In an application or patent, abandoned or lapsed for failure to pay the issue fee or any portion thereof, the required reply must be the payment of the issue fee or any outstanding balance thereof. In an application, abandoned for failure to pay the publication fee, the required reply must include payment of the publication fee.

(2) the petition fee as set forth in 37 CFR 1.17(m);

(3) a statement that the entire delay in filing the required reply from the due date for the reply until the filing of a grantable petition pursuant to 37 CFR 1.137(b) was unintentional. The Commissioner may required additional information where there is a question whether the delay was unintentional; and

(4) any terminal disclaimer (and fee as set forth in 37 CFR 1.20(d)) required pursuant to 37 CFR 1.137(c)).

The petition is **GRANTED**.

The application became abandoned on 1 July, 2005, for failure to timely reply to the non-final Office action mailed on 31 March, 2005, which set a three (3) month shortened statutory period for reply. No extensions of time under 37 CFR 1.136(a) were obtained. The filing of the present petition precedes the mailing of Notice of Abandonment.

Pursuant to 37 CFR 1.136, an extension of time must be filed prior to the expiration of the maximum period obtainable for reply to avoid abandonment. Accordingly, since the $510.00 extension of time fee submitted on 7 November, 2005, was subsequent to the maximum period obtainable for reply, this fee is unnecessary and has been credited to petitioner's deposit account, No. 50-0951.

This application is being referred to Technology Center Art Unit 3731 for further processing.

Telephone inquiries concerning this matter may be directed to the undersigned at (571)272-3231.

D Wood

Douglas I. Wood
Senior Petitions Attorney
Office of Petitions

UNITED STATES PATENT AND TRADEMARK OFFICE

Commissioner for Patents
United States Patent and Trademark Office
P.O. Box 1450
Alexandria, VA 22313-1450
www.uspto.gov

FEB 15 2005

SENNIGER POWERS LEAVITT AND ROEDEL
ONE METROPOLITAN SQUARE
16TH FLOOR
ST LOUIS MO 63102

In re Application of:
Obukowicz et al.
Serial No.: 10/022,320
Filed: December 13, 2001
Attorney Docket No.: 3412/1A/US (PHA 4140.6)

DECISION ON PETITION TO WITHDRAW THE HOLDING OF ABANDONMENT

This is in response to applicants' petition under 37 CFR. § 1.181(a) and MPEP 711.03(c) filed on February 2, 2005, requesting withdrawal of the holding of abandonment of the above-identified application based on non-receipt of an Office action and to restore the application to a pending status.

A review of the file history shows that the Office mailed a first Office action, setting a three-month statutory time period for reply, to applicants on April 20, 2004. On November 2, 2004 the examiner mailed a notice of abandonment for failure to respond to the outstanding Office action.

Applicants' state that the Office action of February 20, 2004 was never received and provides as evidence thereof a copy of the attorney docket report where the Office action would have been entered if received, showing non-receipt of the Office action. Based on the evidence presented, it is concluded that applicants never received the Office action. In view thereof, the Notice of Abandonment mailed November 2, 2004, is vacated and the application is restored to pending status with the mailing date of this decision.

Applicants' petition is **GRANTED**. The application will be forwarded to the examiner for prompt mailing of a new Office action.

Should there be any questions about this decision, please contact Marianne C. Seidel by letter addressed to Director, TC 1600, at the address listed above, or by telephone at 571-272-0584 or by facsimile at 703-872-9306.

Marianne C. Seidel for

Bruce Kisliuk
Director, Technology Center 1600

UNITED STATES PATENT AND TRADEMARK OFFICE

Commissioner for Patents
United States Patent and Trademark Office
P.O. Box 1450
Alexandria, VA 22313-1450
www.uspto.gov

COPY MAILED

SEP 1 4 2005

OFFICE OF PETITIONS

Senniger Powers
One Metropolitan Square, 16th floor
St. Louis, Missouri 63102

In re Application of
Underhill et al
Application No. 10/022,328
Filed: December 28, 2001
Attorney Docket No. KCC 4774 (K-C 15,646 E)

: DECISION REGARDING REQUEST FOR RECONSIDERATION OF PTA

This decision is in response to Applicants' "REQUEST FOR RECONSIDERATION OF THE PATENT TERM ADJUSTMENT PURSUANT TO 37 CFR 1.705" filed on January 28, 2005 advising the Office that the granted PTA is believed to be longer than it should have been. The Office will construe this request as a letter of good faith and candor. The Office thanks applicants for their good faith and candor in bringing this to the attention of the Office.

Applicants request is **GRANTED to the extent herein indicated.** The Office will adjust the PTA determination to reflect a determination of 343 days, not 348 days as suggested by applicant.

Applicants agrees with the 444 days pursuant to 37 CFR 1.702(a)(1) and the 49 day reduction pursuant to 37 CFR 1.704(c)(8) are not in dispute. Applicant further advises the Office of a later IDS submission having a certificate of mailing date of October 27, 2004 and receipt in Office date of November 1, 2004 is not reflected as a PTA reduction. Accordingly, applicants believe that an additional 47 days of PTA delay are in dispute.

Applicants are correct in that a submission of an supplemental paper (IDS) occurred after the response to non-final dated September 10, 2004. The IDS submission was not entered into the PALM record. The Office notes that applicants did not provide any 1 month certification statement pursuant to 37 CFR 1.704(d) and accordingly a reduction should have been taken for this supplemental paper. The reduction should have been 52 days.[1] Accordingly, the overall determination at the time of the mailing of the notice of allowance is 343 days (444-49-52=343).

After the mailing of the decision, the file is being forwarded to the Office of Patent Publication for a prompt issuance of the patent. The Office notes that any additional time for failing to issue the application within four months of the payment of the issue fee and other requirements being satisfied will be added at the time of the issuance of the patent.

---

[1]Reduction began on September 11, 2004(day after initial reply) and ended onNovember 1, 2004. Note that for purposes of PTA, the filing date of a response is the date of receipt in the Office pursuant to 37 CFR 1.6 not the date of the certificate of mailing. See 37 CFR 1.703(f). Accordingly, the clock would have stopped on November 1, 2004 not October 27, 2004.

Because applicants are submitting this request out of good faith and candor, there is no petition fee related to this decision.

Any questions concerning this decision should be directed to Kery A. Fries at 571-272-7757.

Kery A Fries

Kery Fries
Senior Legal Advisor
Office of Patent Legal Administration
Office of Deputy Commissioner
for Patent Examination Policy

cc: Adjusted PAIR calculation

#3
5-20-03

UNITED STATES PATENT AND TRADEMARK OFFICE

COMMISSIONER FOR PATENTS
UNITED STATES PATENT AND TRADEMARK OFFICE
WASHINGTON, D.C. 20231
www.uspto.gov

MAILED

MAY 2 0 2003

TECHNOLOGY CENTER 2100

Paper No. 3

ANTONELLI, TERRY, STOUT & KRAUS, LLP
1300 North Seventeenth Street
Suite 1800
Arlington, VA 22209

In re Application of: James A. McConnell, et al.	)	
Application No. 10/022,330	)	
Filed: December 20, 2001	)	**DECISION ON REQUEST FOR WITHDRAWAL AS ATTORNEY**
For: MULTIPLE PORT ALLOCATION AND CONFIGURATIONS FOR DIFFERENT PORT OPERATION MODES ON A HOST	)	

This is a decision on the Request To Withdraw from Representation filed April 29, 2003.

A grantable request to withdraw as attorney of record should indicate thereon the present mailing addresses of the attorney(s) who is/are withdrawing from the record and of the applicant. The request for withdrawal must be signed by every attorney seeking to withdraw or contain a clear indication that one attorney is signing on behalf of another/others. A request to withdraw will not be approved unless at least 30 (thirty) days would remain between the date of approval and the later of the expiration date of a time to file a response or the expiration date of the maximum time period which can be extended under 37 C.F.R. § 1. 136(a). The effective date of withdrawal being the date of decision and not the date of request. See M.P.E.P. § 402.06. 37 C.F.R. § 1.36 further requires that the applicant or patent owner be notified of the withdrawal of the attorney or agent.

The request is **GRANTED**.

All future communications from the Office will be directed to the below-listed address until otherwise notified by applicant. This correspondence address is provided by the withdrawn attorney(s). Applicant is reminded of the obligation to promptly notify the Patent and Trademark Office (Office) of any change in correspondence address to ensure receipt of all communications from the Office.

Vincent N. Trans
Special Programs Examiner
Technology Center 2100
Computer Architecture and Software
(703) 305-9750

cc: Schwegman, Lundberg, Woesnner & Kluth P.A.
c/o Anne Richards
1600 TCF Tower
121 S. 8th Street
Minneapolis, MN 55402

UNITED STATES PATENT AND TRADEMARK OFFICE

Commissioner for Patents
United States Patent and Trademark Office
P.O. Box 1450
Alexandria, VA 22313-1450
www.uspto.gov

ANTONELLI, TERRY, STOUT & KRAUS, LLP
1300 NORTH SEVENTEENTH STREET
SUITE 1800
ARLINGTON VA 22209-3873

COPY MAILED
JUL 1 0 2006
OFFICE OF PETITIONS

In re Application of	:	
Boakes et al.	:	DECISION DISMISSING PETITION
Application No. 10/022,332	:	UNDER 37 CFR 1.181
Filed: December 20, 2001	:	
Attorney Docket No. 367-40946X00	:	

This is a decision on the petition under 37 CFR 1.181, filed May 10, 2005, and resubmitted on April 18, 2006, to withdraw the holding of abandonment.

On September 13, 2004, the Office mailed a nonfinal Office action, which set a three-month shortened statutory period for reply. In the apparent absence of a timely filed response, the application became abandoned on December 14, 2004. On April 18, 2005, the Office mailed a Notice of Abandonment.

In the present petition, the practitioner requested that the Office withdraw the holding of abandonment on the basis that the nonfinal Office action was not received. Specifically, the practitioner asserted that he inspected the file of the above-identified application maintained in the law office and did find any communication concerning the receipt of the nonfinal Office action. Additionally, applicant stated:

> Assuming that an Office Action in fact did issue, submitted herewith is a printout from the docketing records of our firm showing that there was no matter involving the above-referenced application **on March 13, 2005** requiring a response. Furthermore, the manual pages out of this firm's **Sunday, March 13, 2005 and Monday, March 14, 2005 docketing records** are also submitted herewith which do not contain an entry that any response to an Office Action was due.

Petition of May 10, 2005 (emphasis added).

PETITION TO WITHDRAW THE HOLDING OF ABANDONMENT

First, the Office notes that the practitioner attached and referenced the docketing records for an incorrect time period (i.e., March 13-14, 2005). The nonfinal Office action was mailed on September

13, 2004, which required a response by December 14, 2004, absent extensions of time. Additionally, practitioner submitted a "Case Detail" for an incorrect Application, No. 10/022,220, instead of Application No. 10/022,332.

Second, a review of the record indicates no irregularity in the mailing of the nonfinal Office action, and in the absence of any irregularity in the mailing, there is a strong presumption that the Office action was properly mailed to the address of record, as it existed on September 13, 2004. This presumption may be overcome by a showing that the Office action was not in fact received. The showing required to establish non-receipt of an Office communication must include a statement from the practitioner, stating that the practitioner did not receive the Office communication and attesting to the fact that a search of the file jacket and docket records indicates that the Office communication was not received. A copy of the docket record where the non-received Office communication would have been entered had it been received and docketed must be attached to and referenced in practitioner's statement. See MPEP 711.03(c). For example, if a three-month period for reply was set in the non-received Office action, a copy of the docket report showing all replies docketed for a date three months from the mail date of the non-received Office action must be submitted as documentary proof of non-receipt of the Office action. The showing outlined above may not be sufficient if there are circumstances that point to a conclusion that the Office action may have been lost after receipt rather than a conclusion that the Office action was lost in the mail (*e.g.* if the practitioner has a history of not receiving Office actions).

Accordingly, petitioner must submit a copy of the docket record for the correct application and for the relevant period, showing all replies docketed for a date three months from the mail date of the non-received nonfinal Office action as documentary proof of non-receipt of the nonfinal Office action. As petitioner has not presented the required showing, the petition to withdraw the holding of abandonment is dismissed.

Any request for reconsideration of this decision must be submitted within **TWO (2) MONTHS** from the mail date of this decision. The reconsideration request should include a cover letter entitled "Renewed Petition under 37 CFR 1.181 to Withdraw the Holding of Abandonment." Extensions of time are permitted under 37 CFR 1.136(a).

ALTERNATIVE VENUE

Petitioner may wish to consider filing a petition under 37 CFR 1.137(b) to revive an unintentionally abandoned application instead of filing a renewed petition.

A grantable petition pursuant to 37 CFR 1.137(b) must be accompanied by:

> (1) The reply required to the outstanding Office action or notice, unless previously filed. In nonprovisional application abandoned for failure to prosecute, the required reply may be met by the filing of a continuing application. In a nonprovisional utility or plant application filed on or after June 8, 1995, and abandoned for failure to prosecute, the required reply may also be met by the filing of a request for continued examination in compliance with § 114. In an application or patent, abandoned or lapsed for failure to pay the issue fee or any portion thereof,

the required reply must include payment of the issue fee or any outstanding balance. In an application, abandoned for failure to pay the publication fee, the required reply must include payment of the publication fee.

(2) The petition fee as set forth in 37 CFR 1.17(m), **an additional** $1,500.00 for a large entity and $750.00 for a small entity;

(3) A statement that the entire delay in filing the required reply from the due date for the reply until the filing of a grantable petition pursuant to this paragraph was unintentional. The Director may require additional information where there is a question whether the delay was unintentional; and

(4) Any terminal disclaimer (and fee set forth in § 1.20(d)) required pursuant to paragraph (d) of this section.

Further correspondence with respect to this matter should be addressed as follows and **to the attention of Senior Petitions Attorney Christina Tartera Donnell:**

By mail: Mail Stop Petition
Commissioner for Patents
P.O. Box 1450
Alexandria, VA 22313-1450

By FAX: (571) 273-8300
Attn: Office of Petitions

By hand: Customer Service Window
Randolph Building
401 Dulany Street
Alexandria, VA 22314

Telephone inquiries concerning this matter may be directed to the undersigned at (571) 272-3211.

C. T. Donnell

Christina Tartera Donnell
Senior Petitions Attorney
Office of Petitions

UNITED STATES PATENT AND TRADEMARK OFFICE

Commissioner for Patents
United States Patent and Trademark Office
P.O. Box 1450
Alexandria, VA 22313-1450
www.uspto.gov

ANTONELLI, TERRY, STOUT & KRAUS, LLP
1300 NORTH SEVENTEENTH STREET
SUITE 1800
ARLINGTON VA 22209-3873

COPY MAILED
SEP 26 2006
OFFICE OF PETITIONS

In re Application of	:	
Boakes et al.	:	DECISION ON PETITION
Application No. 10/022,332	:	UNDER 37 CFR 1.181
Filed: December 20, 2001	:	
Attorney Docket No. 367-40946X00	:	

This is a decision on the renewed petition under 37 CFR 1.181, filed August 3, 2006, to withdraw the holding of abandonment.

On September 13, 2004, the Office mailed a nonfinal Office action, which set a three-month shortened statutory period for reply. In the apparent absence of a timely filed response, the application became abandoned on December 14, 2004. On April 18, 2005, the Office mailed a Notice of Abandonment.

The practitioner requests that the Office withdraw the holding of abandonment on the basis that the nonfinal Office action was not received. Specifically, the practitioner notes that it is the practice of the law firm in its manual docketing system to docket only the full statutory period for any response. The practitioner further asserts that he inspected the file of the above-identified application maintained in the law office and the manual docketing records and did find any communication concerning the receipt of the nonfinal Office action. In support of the assertion, the practitioner submits a copy of the docketing records for the present application for the relevant period. Accordingly, petitioner presented the required showing under 37 CFR 1.181.

The renewed petition under 37 CFR 1.181 is **GRANTED**. No petition fee is required.

Technology Center Art Unit 2833 has been advised of this decision. The matter is being referred to the Technology Center's technical support staff for mailing of a new nonfinal Office Action. The three (3) month shortened statutory time period for responding to the nonfinal Office Action will be set to run from the mailing date of the new nonfinal Office Action.

Telephone inquiries related to this decision may be directed to the undersigned at (571) 272-3211.

Christina Tartera Donnell

Christina Tartera Donnell
Senior Petitions Attorney
Office of Petitions

UNITED STATES PATENT AND TRADEMARK OFFICE

Under Secretary of Commerce for Intellectual Property and
Director of the United States Patent and Trademark Office
Washington, D.C. 20231
www.uspto.gov

Paper No. 18

MILLEN, WHITE, ZELANO & BRANIGAN, P.C.
2200 CLARENDON BLVD.
SUITE 1400
ARLINGTON VA 22201

COPY MAILED

DEC 18 2002

OFFICE OF PETITIONS

In re Application of	:	
Ratan K. Chaudhuri	:	
Application No. 10/022,343	:	ON PETITION
Filed: December 20, 2001	:	
Attorney Docket No. EMI 29	:	

This is a decision on the petition, filed December 17, 2002, under 37 CFR 1.313(c)(2) to withdraw the above-identified application from issue after payment of the issue fee.

The petition is **GRANTED**.

The above-identified application is withdrawn from issue for consideration of a submission under 37 CFR 1.114 (request for continued examination). See 37 CFR 1.313(c)(2).

Petitioner is advised that the issue fee paid on November 19, 2002 in the above-identified application cannot be refunded. If, however, the above-identified application is again allowed, petitioner may request that it be applied towards the issue fee required by the new Notice of Allowance.[1]

Telephone inquiries should be directed to the undersigned at (703) 305-8859.

After receipt of the file in the Office of Petitions, the application will be forwarded to Technology Center AU 1625 for processing of the request for continued examination under 37 CFR 1.114.

Karen Creasy

Karen Creasy
Petitions Examiner
Office of Petitions
Office of the Deputy Commissioner
for Patent Examination Policy

---

[1] The request to apply the issue fee to the new Notice must be made in writing and should be accompanied by the new Issue Fee Transmittal Form PTOL-85(b), along with a copy of this decision. Additionally, if the issue fee has increased from the previously paid issue fee, the balance due must be submitted. **Failure to *timely* request *in writing* that th pr viously paid issue fee b applied towards th n w Notic and payment of any balanc du will result in th abandonment of th application.**

PTO/SB/66 (03-09)
Approved for use through 03/31/2012. OMB 0651-0016
U.S. Patent and Trademark Office: U.S. DEPARTMENT OF COMMERCE
Under the Paperwork Reduction Act of 1995, no persons are required to respond to a collection of information unless it displays valid OMB control number.

PETITION TO ACCEPT UNINTENTIONALLY DELAYED PAYMENT OF MAINTENANCE FEE IN AN EXPIRED PATENT (37 CFR 1.378(c))

Patent Number	Issue Date (YYYY-MM-DD)	Application Number	Filing Date (YYYY-MM-DD)	Docket Number (if applicable)
6,831,191	2004-12-14	10/022,343	2001-12-20	MERCK-3432

CAUTION: Maintenance fee (and surcharge, if any) payment must correctly identify: (1) the patent number and (2) the application number of the actual U.S. application leading to issuance of that patent to ensure the fee(s) is/are associated with the correct patent. 37 CFR 1.366(c) and (d).

SMALL ENTITY
☐ Patentee claims, or has previously claimed, small entity status. See 37 CFR 1.27.

LOSS OF ENTITLEMENT TO SMALL ENTITY STATUS
☐ Patentee is no longer entitled to small entity status. See 37 CFR 1.27(g)

NOT Small Entity		Small Entity	
Fee	Code	Fee	Code
◉ 3 ½ year	(1551)	○ 3 ½ year	(2551)
○ 7 ½ year	(1552)	○ 7 ½ year	(2552)
○ 11 ½ year	(1553)	○ 11 ½ year	(2553)

SURCHARGE
The surcharge required by 37 CFR 1.20(i)(2) (Fee Code 1558) must be paid as a condition of accepting unintentionally delayed payment of the maintenance fee.

MAINTENANCE FEE (37 CFR 1.20(e)-(g))
The appropriate maintenance fee must be submitted with this petition.

STATEMENT
THE UNDERSIGNED CERTIFIES THAT THE DELAY IN PAYMENT OF THE MAINTENANCE FEE TO THIS PATENT WAS UNINTENTIONAL

PETITIONER(S) REQUEST THAT THE DELAYED PAYMENT OF THE MAINTENANCE FEE BE ACCEPTED AND THE PATENT REINSTATED

THIS PORTION MUST BE COMPLETED BY THE SIGNATORY OR SIGNATORIES

37 CFR 1.378(d) states: "Any petition under this section must be signed by an attorney or agent registered to practice before the Patent and Trademark Office, or by the patentee, the assignee, or other party in interest."

I certify, in accordance with 37 CFR 1.4(d)(4) that I am

◉ An attorney or agent registered to practice before the Patent and Trademark Office

○ A sole patentee

○ A joint patentee; I certify that I am authorized to sign this submission on behalf of all the other patentees.

○ A joint patentee; all of whom are signing this e-petition

○ The assignee of record of the entire interest

Patent Practitioner			
A signature of the applicant or representative is required in accordance with 37 CFR 1.33 and 10.18. Please see 37 CFR 1.4(d) for the form of the signature			
Signature	/Csaba Henter/	Date (YYYY-MM-DD)	2009-04-30
Name	Csaba Henter	Registration Number	50908

This collection of information is required by 37 CFR 1.378(c). The information is required to obtain or retain a benefit by the public which is to file (and by the USPTO to process) an application. Confidentiality is governed by 35 U.S.C. 122 and 37 CFR 1.11 and 1.14. This collection is estimated to take 1 hour to complete, including gathering, preparing, and submitting the completed application form to the USPTO. Time will vary depending upon the individual case. Any comments on the amount of time you require to complete this form and/ or suggestions for reducing this burden, should be sent to the Chief Information Officer, U.S. Patent and Trademark Office, U.S. Department of Commerce, P.O. Box 1450, Alexandria, VA 22313-1450. DO NOT SEND FEES OR COMPLETED FORMS TO THIS ADDRESS. **This form can only be used when in conjunction with EFS-Web. If this form is mailed to the USPTO, it may cause delays in reinstating the patent.**

Privacy Act Statement

The Privacy Act of 1974 (P.L. 93-579) requires that you be given certain information in connection with your submission of the attached form related to a patent application or patent. Accordingly, pursuant to the requirements of the Act, please be advised that: (1) the general authority for the collection of this information is 35 U.S.C. 2(b)(2); (2) furnishing of the information solicited is voluntary; and (3) the principal purpose for which the information is used by the U.S. Patent and Trademark Office is to process and/or examine your submission related to a patent application or patent. If you do not furnish the requested information, the U.S. Patent and Trademark Office may not be able to process and/or examine your submission, which may result in termination of proceedings or abandonment of the application or expiration of the patent.

The information provided by you in this form will be subject to the following routine uses:

1. The information on this form will be treated confidentially to the extent allowed under the Freedom of Information Act (5 U.S.C. 552) and the Privacy Act (5 U.S.C. 552a). Records from this system of records may be disclosed to the Department of Justice to determine whether the Freedom of Information Act requires disclosure of these records.

2. A record from this system of records may be disclosed, as a routine use, in the course of presenting evidence to a court, magistrate, or administrative tribunal, including disclosures to opposing counsel in the course of settlement negotiations.

3. A record in this system of records may be disclosed, as a routine use, to a Member of Congress submitting a request involving an individual, to whom the record pertains, when the individual has requested assistance from the Member with respect to the subject matter of the record.

4. A record in this system of records may be disclosed, as a routine use, to a contractor of the Agency having need for the information in order to perform a contract. Recipients of information shall be required to comply with the requirements of the Privacy Act of 1974, as amended, pursuant to 5 U.S.C. 552a(m).

5. A record related to an International Application filed under the Patent Cooperation Treaty in this system of records may be disclosed, as a routine use, to the International Bureau of the World Intellectual Property Organization, pursuant to the Patent Cooperation Treaty.

6. A record in this system of records may be disclosed, as a routine use, to another federal agency for purposes of National Security review (35 U.S.C. 181) and for review pursuant to the Atomic Energy Act (42 U.S.C. 218(c)).

7. A record from this system of records may be disclosed, as a routine use, to the Administrator, General Services, or his/her designee, during an inspection of records conducted by GSA as part of that agency's responsibility to recommend improvements in records management practices and programs, under authority of 44 U.S.C. 2904 and 2906. Such disclosure shall be made in accordance with the GSA regulations governing inspection of records for this purpose, and any other relevant (i.e., GSA or Commerce) directive. Such disclosure shall not be used to make determinations about individuals.

8. A record from this system of records may be disclosed, as a routine use, to the public after either publication of the application pursuant to 35 U.S.C. 122(b) or issuance of a patent pursuant to 35 U.S.C. 151. Further, a record may be disclosed, subject to the limitations of 37 CFR 1.14, as a routine use, to the public if the record was filed in an application which became abandoned or in which the proceedings were terminated and which application is referenced by either a published application, an application open to public inspections or an issued patent.

9. A record from this system of records may be disclosed, as a routine use, to a Federal, State, or local law enforcement agency, if the USPTO becomes aware of a violation or potential violation of law or regulation.

UNITED STATES PATENT AND TRADEMARK OFFICE

Commissioner for Patents
United States Patent and Trademark Office
P.O. Box 1450
Alexandria, VA 22313-1450
www.uspto.gov

In re Patent No. 6831191
Issue Date: December 14,2004
Application No. 10022343
Filed: December 20,2001
Attorney Docket No. EMI 29

:
:DECISION GRANTING PETITION
:UNDER 37 CFR 1.378(c)
:

This is a decision on the electronic petition, filed April 30,2009 ,under 37 CFR 1.378(c) to accept the unintentionally delayed payment of the 3.5 year maintenance fee for the above-identified patent.

The petition is **GRANTED**.

The maintenance fee is accepted, and the above-identified patent reinstated as of April 30,2009 . This decision also constitutes notice that the fee has been accepted. An electronic copy of the petition and this decision has been created as an entry in the Image File Wrapper. Nevertheless, petitioner should print and retain an independent copy.

Telephone inquiries related to this electronic decision should be directed to the Electronic Business Center at 1-866-217-9197.

UNITED STATES PATENT AND TRADEMARK OFFICE

Commissioner for Patents
United States Patent and Trademark Office
P.O. Box 1450
Alexandria, VA 22313-1450
www.uspto.gov

In re Patent No. 6732395
Issue Date: May 11,2004
Application No. 10022353
Filed: December 13,2001
Attorney Docket No. ALWA.P0002

:

:DECISION GRANTING PETITION
:UNDER 37 CFR 1.378(c)

:

This is a decision on the electronic petition, filed June 23,2008 ,under 37 CFR 1.378(c) to accept the unintentionally delayed payment of the 3.5 year maintenance fee for the above-identified patent.

The petition is GRANTED.

The maintenance fee is accepted, and the above-identified patent reinstated as of June 23,2008 . This decision also constitutes notice that the fee has been accepted. An electronic copy of the petition and this decision has been created as an entry in an Image File Wrapper. Nevertheless, petitioner should print and retain an independent copy

Telephone inquires related to this electronic decision should be directed to the Electronic Business Center at 1-866-217-9197.

Under the Paperwork Reduction Act of 1995, no persons are required to respond to a collection of information unless it displays valid OMB control number.

PETITION TO ACCEPT UNINTENTIONALLY DELAYED PAYMENT OF MAINTENANCE FEE IN AN EXPIRED PATENT (37 CFR 1.378(c))

Patent Number	Issue Date (YYYY-MM-DD)	Application Number	Filing Date (YYYY-MM-DD)	Docket Number (if applicable)
6,732,395	2004-05-11	10022353	2001-12-13	4437/097

CAUTION: Maintenance fee (and surcharge, if any) payment must correctly identify: (1) the patent number and (2) the application number of the actual U.S. application leading to issuance of that patent to ensure the fee(s) is/are associated with the correct patent. 37 CFR 1.366(c) and (d).

SMALL ENTITY
☒ Patentee claims, or has previously claimed, small entity status. See 37 CFR 1.27.

LOSS OF ENTITLEMENT TO SMALL ENTITY STATUS
☐ Patentee is no longer entitled to small entity status. See 37 CFR 1.27(g)

NOT Small Entity		Small Entity	
Fee	Code	Fee	Code
○ 3 ½ year	(1551)	◉ 3 ½ year	(2551)
○ 7 ½ year	(1552)	○ 7 ½ year	(2552)
○ 11 ½ year	(1553)	○ 11 ½ year	(2553)

SURCHARGE
The surcharge required by 37 CFR 1.20(i)(2) (Fee Code 1558) must be paid as a condition of accepting unintentionally delayed payment of the maintenance fee.

MAINTENANCE FEE (37 CFR 1.20(e)-(g))
The appropriate maintenance fee must be submitted with this petition.

STATEMENT
THE UNDERSIGNED CERTIFIES THAT THE DELAY IN PAYMENT OF THE MAINTENANCE FEE TO THIS PATENT WAS UNINTENTIONAL

PETITIONER(S) REQUEST THAT THE DELAYED PAYMENT OF THE MAINTENANCE FEE BE ACCEPTED AND THE PATENT REINSTATED

THIS PORTION MUST BE COMPLETED BY THE SIGNATORY OR SIGNATORIES

37 CFR 1.378(d) states: "Any petition under this section must be signed by an attorney or agent registered to practice before the Patent and Trademark Office, or by the patentee, the assignee, or other party in interest."

I certify, in accordance with 37 CFR 1.4(d)(4) that I am

◉ An attorney or agent registered to practice before the Patent and Trademark Office

○ A sole patentee

○ A joint patentee; I certify that I am authorized to sign this submission on behalf of all the other patentees.

○ A joint patentee; all of whom are signing this e-petition

○ The assignee of record of the entire interest

Patent Practitioner			
A signature of the applicant or representative is required in accordance with 37 CFR 1.33 and 10.18. Please see 37 CFR 1.4(d) for the form of the signature			
Signature	/George Gottlieb/	Date (YYYY-MM-DD)	2008-06-23
Name	George Gottlieb	Registration Number	22035

This collection of information is required by 37 CFR 1.378(c). The information is required to obtain or retain a benefit by the public which is to file (and by the USPTO to process) an application. Confidentiality is governed by 35 U.S.C. 122 and 37 CFR 1.11 and 1.14. This collection is estimated to take 1 hour to complete, including gathering, preparing, and submitting the completed application form to the USPTO. Time will vary depending upon the individual case. Any comments on the amount of time you require to complete this form and/ or suggestions for reducing this burden, should be sent to the Chief Information Officer, U.S. Patent and Trademark Office, U.S. Department of Commerce, P.O. Box 1450, Alexandria, VA 22313-1450. DO NOT SEND FEES OR COMPLETED FORMS TO THIS ADDRESS. **This form can only be used when in conjunction with EFS-Web. If this form is mailed to the USPTO, it may cause delays in reinstating the patent.**

Privacy Act Statement

The Privacy Act of 1974 (P.L. 93-579) requires that you be given certain information in connection with your submission of the attached form related to a patent application or patent. Accordingly, pursuant to the requirements of the Act, please be advised that: (1) the general authority for the collection of this information is 35 U.S.C. 2(b)(2); (2) furnishing of the information solicited is voluntary; and (3) the principal purpose for which the information is used by the U.S. Patent and Trademark Office is to process and/or examine your submission related to a patent application or patent. If you do not furnish the requested information, the U.S. Patent and Trademark Office may not be able to process and/or examine your submission, which may result in termination of proceedings or abandonment of the application or expiration of the patent.

The information provided by you in this form will be subject to the following routine uses:

1. The information on this form will be treated confidentially to the extent allowed under the Freedom of Information Act (5 U.S.C. 552) and the Privacy Act (5 U.S.C. 552a). Records from this system of records may be disclosed to the Department of Justice to determine whether the Freedom of Information Act requires disclosure of these record s.

2. A record from this system of records may be disclosed, as a routine use, in the course of presenting evidence to a court, magistrate, or administrative tribunal, including disclosures to opposing counsel in the course of settlement negotiations.

3. A record in this system of records may be disclosed, as a routine use, to a Member of Congress submitting a request involving an individual, to whom the record pertains, when the individual has requested assistance from the Member with respect to the subject matter of the record.

4. A record in this system of records may be disclosed, as a routine use, to a contractor of the Agency having need for the information in order to perform a contract. Recipients of information shall be required to comply with the requirements of the Privacy Act of 1974, as amended, pursuant to 5 U.S.C. 552a(m).

5. A record related to an International Application filed under the Patent Cooperation Treaty in this system of records may be disclosed, as a routine use, to the International Bureau of the World Intellectual Property Organization, pursuant to the Patent Cooperation Treaty.

6. A record in this system of records may be disclosed, as a routine use, to another federal agency for purposes of National Security review (35 U.S.C. 181) and for review pursuant to the Atomic Energy Act (42 U.S.C. 218(c)).

7. A record from this system of records may be disclosed, as a routine use, to the Administrator, General Services, or his/her designee, during an inspection of records conducted by GSA as part of that agency's responsibility to recommend improvements in records management practices and programs, under authority of 44 U.S.C. 2904 and 2906. Such disclosure shall be made in accordance with the GSA regulations governing inspection of records for this purpose, and any other relevant (i.e., GSA or Commerce) directive. Such disclosure shall not be used to make determinations about individuals.

8. A record from this system of records may be disclosed, as a routine use, to the public after either publication of the application pursuant to 35 U.S.C. 122(b) or issuance of a patent pursuant to 35 U.S.C. 151. Further, a record may be disclosed, subject to the limitations of 37 CFR 1.14, as a routine use, to the public if the record was filed in an application which became abandoned or in which the proceedings were terminated and which application is referenced by either a published application, an application open to public inspections or an issued patent.

9. A record from this system of records may be disclosed, as a routine use, to a Federal, State, or local law enforcement agency, if the USPTO becomes aware of a violation or potential violation of law or regulation.

UNITED STATES PATENT AND TRADEMARK OFFICE

Commissioner for Patents
United States Patent and Trademark Office
P.O. Box 1450
Alexandria, VA 22313-1450
www.uspto.gov

PHILIPS INTELLECTUAL PROPERTY & STANDARDS
P O BOX 3001
BRIARCLIFF MANOR, NY 10510

COPY MAILED
AUG 15 2006
OFFICE OF PETITIONS

In re Application of	:	
Cornelis Antonie Maria Jaspers	:	
Application No. 10/022,382	:	DECISION GRANTING PETITION
Filed: October 30, 2001	:	UNDER 37 CFR 1.313(c)(2)
Attorney Docket No. NL 000601	:	

This is a decision on the petition, filed August 10, 2006, under 37 CFR 1.313(c)(2) to withdraw the above-identified application from issue after payment of the issue fee.

The petition is **GRANTED**.

The above-identified application is withdrawn from issue for consideration of a submission under 37 CFR 1.114 (request for continued examination). See 37 CFR 1.313(c)(2).

Petitioner is advised that the issue fee paid on July 18, 2006 in the above-identified application cannot be refunded. If, however, the above-identified application is again allowed, petitioner may request that it be applied towards the issue fee required by the new Notice of Allowance.[1]

Telephone inquiries should be directed to the undersigned at (571) 272-3218.

This matter is being referred to Technology Center AU 2622 for processing of the request for continued examination under 37 CFR 1.114 and for consideration of the Information Disclosure Statement.

Frances Hicks
Petitions Examiner
Office of Petitions

C:\Documents and Settings\FHicks\My Documents\470\Aug9\022382.wpd

---

[1] *The request to apply the issue fee to the new Notice may be satisfied by completing and returning the new Part B – Fee(s) Transmittal Form (along with any balance due at the time of submission), which includes the following language thereon: "The Director of the USPTO is requested to apply the Issue Fee and Publication Fee (if any) or to re-apply any previously paid issue fee in the application identified above. Petitioner is advised that, whether a fee is indicated as being due or not, the Issue Fee Transmittal Form* ***must*** *be completed and timely submitted to avoid abandonment. Note the language in bold text on the first page of the Notice of Allowance and Fee(s) Due (PTOL-85).*

UNITED STATES PATENT AND TRADEMARK OFFICE

COMMISSIONER FOR PATENTS
UNITED STATES PATENT AND TRADEMARK OFFICE
P.O. BOX 1450
ALEXANDRIA, VA 22313-1450
www.uspto.gov

PHILIPS INTELLECTUAL PROPERTY & STANDARDS
P.O. BOX 3001
BRIARCLIFF MANOR, NY 10510

COPY MAILED

JUN 22 2007

OFFICE OF PETITIONS

In re Application of	:	
JASPERS	:	
Application No.: 10/022,382	:	DECISION ON PETITION
Filing Date: October 30, 2001	:	UNDER 37 CFR 1.137(B)
Attorney Docket No.: NL 000601	:	

This is a decision on the petition under 37 CFR 1.137(b), filed January 8, 2007, to revive the above-identified application.

The petition is **GRANTED.**

The above-identified application became abandoned for failure to reply in a timely manner to the Notice of Allowance mailed September 1, 2006, which set a statutory period for reply of three (3) months. Accordingly, by operation of law, the above-identified application became abandoned on December 2, 2006.

The petition satisfies the conditions for revival pursuant to the provisions of 37 CFR 1.137(b) in that (1) the reply to the Notice of Allowance; (2) the petition fee; and (3) the required statement of unintentional delay have been received. Accordingly, the reply is accepted as having been unintentionally delayed.

This application is being referred to the Office of Publications.

Telephone inquiries concerning this decision should be directed to the undersigned at (571) 272-3303.

Bryan Lin

Bryan Lin
Legal Examiner
Office of the Deputy Commissioner
for Patent Examination Policy

UNITED STATES PATENT AND TRADEMARK OFFICE

Commissioner for Patents
United States Patent and Trademark Office
P.O. Box 1450
Alexandria, VA 22313-1450
www.uspto.gov

JJGJR.: 02-06

Paper No: __

COPY MAILED

FEB 10 2006

OFFICE OF PETITIONS

DELTAT GMBH
KERKRADER STRASSE 11
HESSEN 35394 DE GERMANY

In re Application of	:	
Nehring, et al.	:	DECISION
Application No.: 10/022,406	:	
Filing Date: 20 December, 2001	:	
Attorney Docket No. (None)	:	

This is a decision on the petition filed on 1 June, 2005 (but the file was not received into the Office of Petitions until this writing) and considered as a request for the withdrawal of the holding of abandonment under 37 C.F.R. §1.181.

For the reasons set forth below the petition as considered under 37 C.F.R. §1.181 is **DISMISSED**.

NOTES:

(1) Any petition (and fee) for reconsideration of this decision must be submitted within two (2) months from the mail date of this decision. Extensions of time under 37 C.F.R. §1.136(a) are permitted. The reconsideration request should include a cover letter entitled "Renewed Petition under 37 C.F.R. §1.137(a)."

(It is noted, however, that Petitioner may be unable to present a satisfactory showing to support a petition under 37 C.F.R. §1.137(a), and Petitioner's only alternative will be to file a petition under 37 C.F.R. §1.137(b).)

(2) Thereafter, there will be no further reconsideration of this matter.

BACKGROUND

The record reflects that:

- Petitioner failed to reply timely and properly to a non-final Office action mailed on 23 June, 2004, with reply due absent extension of time on or before 23 September, 2004–a copy is enclosed for Petitioner's review;
- the application went abandoned after midnight 23 September, 2004;
- the Office mailed a Notice of Abandonment, indicating a failure to respond to the 23 June, 2004, Office action, on 20 May, 2005;
- Petitioner averred in the instant petition that the reason for the abandonment was that the Office had failed to process a payment from Petitioner to the Office–while it is true that the Office has not processed the addition payment, and Petitioner must resubmit the payment/authorization along with that for any renewed petition, the focus at this point also is Petitioner's failure to reply timely and properly to the 23 June, 2004, Office action.

STATUTES, REGULATIONS AND ANALYSIS

Congress has authorized the Commissioner to "revive an application if the delay is shown to the satisfaction of the Commissioner to have been "unavoidable." 35 U.S.C. §133 (1994).[1]

The regulations at 37 C.F.R. §1.137(a) and (b) set forth the requirements for a petitioner to revive a previously unavoidably or unintentionally, respectively, abandoned application under this congressional grant of authority. The language of 35 U.S.C. §133 and 37 C.F.R. §1.137(a) is clear, unambiguous, and without qualification: the delay in tendering the reply to the outstanding Office action, as well as filing the first petition seeking revival, must have been unavoidable for the reply now to be accepted on petition.[2]

---

[1] 35 U.S.C. §133 provides:
35 U.S.C. §133 Time for prosecuting application.
Upon failure of the applicant to prosecute the application within six months after any action therein, of which notice has been given or mailed to the applicant, or within such shorter time, not less than thirty days, as fixed by the Commissioner in such action, the application shall be regarded as abandoned by the parties thereto, unless it be shown to the satisfaction of the Commissioner that such delay was unavoidable.

[2] Therefore, by example, an unavoidable delay in the payment of the Filing Fee might occur if a reply is shipped by the US Postal Service, but due to catastrophic accident, the delivery is not made.

Delays in responding properly raise the question whether delays are unavoidable.[3] Where there is a question whether the delay was unavoidable, Petitioners must meet the burden of establishing that the delay was unavoidable within the meaning of 35 U.S.C. §133 and 37 C.F.R. §1.137(a).[4] And the Petitioner must be diligent in attending to the matter.[5] Failure to do so does not constitute the care required under Pratt, and so cannot satisfy the test for diligence and due care.

(By contrast, unintentional delays are those that do not satisfy the very strict statutory and regulatory requirements of unavoidable delay, and also, by definition, are not intentional.[6]))

Allegations as to the Request to
Withdraw the Holding of Abandonment

The courts have determined the construct for properly supporting a petition seeking withdrawal of a holding of abandonment.[7]

The commentary at MPEP §711.03(c) provides:

* * *

> **B. Petition To Withdraw Holding of Abandonment Based on Evidence That a Reply Was Timely Mailed or Filed**
>
> 37 C.F.R. §1.10(c) through §1.10(e) and §1.10(g) set forth procedures for petitioning the Director of the USPTO to accord a filing date to correspondence as of the date of deposit of the correspondence as "Express Mail." A petition to withdraw the holding of abandonment relying upon a timely reply placed in "Express Mail" must include an appropriate petition under 37 C.F.R. §1.10(c), (d), * (e), or (g) (see MPEP § 513). When a paper is shown to have been mailed to the Office using the "Express Mail" procedures, the paper must be entered in PALM with the

---

[3] See: *Changes to Patent Practice and Procedure; Final Rule Notice*, 62 *Fed. Reg.* at 53158-59 (October 10, 1997), 1203 *Off. Gaz. Pat. Office* at 86-87 (October 21, 1997).

[4] See: In re Application of G, 11 USPQ2d 1378, 1380 (Comm'r Pats. 1989).

[5] See: Diligence in Filing Petitions to Revive and Petitions to Withdraw the Holding of Abandonment, 1124 Off. Gaz. Pat. Office 33 (March 19, 1991). It was and is Petitioner's burden to exercise diligence in seeking either to have the holding of abandonment withdrawn or the application revived. See 1124 Off. Gaz. Pat. Office supra.

[6] Therefore, by example, an unintentional delay in the reply might occur if the reply and transmittal form are to be prepared for shipment by the US Postal Service, but other pressing matters distract one's attention and the mail is not timely deposited for shipment.

[7] See: Delgar v. Schulyer, 172 USPQ 513 (D.D.C. 1971).

"Express Mail" date.

Similarly, applicants may establish that a reply was filed with a postcard receipt that properly identifies the reply and provides *prima facie* evidence that the reply was timely filed. See MPEP § 503. For example, if the application has been held abandoned for failure to file a reply to a first Office action, and applicant has a postcard receipt showing that an amendment was timely filed in response to the Office action, then the holding of abandonment should be withdrawn upon the filing of a petition to withdraw the holding of abandonment. When the reply is shown to have been timely filed based on a postcard receipt, the reply must be entered into PALM using the date of receipt of the reply as shown on the post card receipt.

Where a certificate of mailing under 37 C.F.R. §1.8, but not a postcard receipt, is relied upon in a petition to withdraw the holding of abandonment, see 37 C.F.R. §1.8(b) and MPEP § 512. As stated in 37 C.F.R §1.8(b)(3) the statement that attests to the previous timely mailing or transmission of the correspondence must be on a personal knowledge basis, or to the satisfaction of the Director of the USPTO. If the statement attesting to the previous timely mailing is not made by the person who signed the Certificate of Mailing (i.e., there is no personal knowledge basis), then the statement attesting to the previous timely mailing should include evidence that supports the conclusion that the correspondence was actually mailed (e.g., copies of a mailing log establishing that correspondence was mailed for that application). When the correspondence is shown to have been timely filed based on a certificate of mailing, the correspondence is entered into PALM with the actual date of receipt (i.e., the date that the duplicate copy of the papers was filed with the statement under 37 C.F.R. §1.8).

37 C.F.R. §1.8(b) also permits applicant to notify the Office of a previous mailing or transmission of correspondence and submit a statement under 37 C.F.R. 1.8(b)(3) accompanied by a duplicate copy of the correspondence when a reasonable amount of time (e.g., more than one month) has elapsed from the time of mailing or transmitting of the correspondence. Applicant does not have to wait until the application becomes abandoned before notifying the Office of the previous mailing or transmission of the

> correspondence. Applicant should check the private Patent Application Information Retrieval (PAIR) system for the status of the correspondence before notifying the Office. See MPEP § 512.
>
> * * *

Moreover, Petitioner has failed to respond to the Office action in question–thus, Petitioner has not satisfied the showing requirements described above.

CONCLUSION

Because Petitioner has not satisfied the burdens set forth in Delgar v. Schulyer, the petition as considered under 37 C.F.R. §1.181 hereby is **dismissed**.

ALTERNATIVE VENUE

Petitioner's only alternative to irretrievable abandonment is a petition alleging unintentional delay under 37 C.F.R. §1.137(b).[8]

Petitioner may wish to file such a petition to the Commissioner requesting revival of an application abandoned due to unintentional delay. (See: http://www.uspto.gov/web/offices/pac/mpep/documents/0700_711_03_c.htm#sect711.03c)

A petition to revive on the grounds of unintentional delay must be filed promptly and such petition must be accompanied by the reply (the amendment), the petition fee, and a statement that "the entire delay in filing the required reply from the due date for the reply until the filing of a grantable petition was unintentional." (The statement is in the form provided and available online.)

Further correspondence with respect to this matter should be addressed as follows:[9]

By mail: Commissioner for Patents[10]
P.O. Box 1450
Alexandria, VA 22313-1450

---

[8] The regulations at 37 C.F.R. §1.183 sets forth that waiver of the rules is "subject to such other requirements as may be imposed."

[9] On July 15, 2005, the Central Facsimile (FAX) Number changed to (571) 273-8300. The old FAX number no longer is in service and (571) 273-8300 will be the only facsimile number recognized for centralized delivery. (For further information. see: http://www.uspto.gov/web/offices/pac/dapp/opla/preognotice/cfax062005.pdf .)

[10] To determine the appropriate addresses for other subject-specific correspondence, refer to the USPTO Web site at www.uspto.gov.

By FAX: IFW Formal Filings
(571) 273-8300
ATTN.: Office of Petitions

By hand: Mail Stop: Petition
Customer Service Window
Randolph Building
401 Dulany Street
Alexandria, VA 22314

Telephone inquiries concerning this decision may be directed to the undersigned at (571) 272-3214.

John J. Gillon, Jr.
Senior Attorney
Office of Petitions

Encl: Form: Petition alleging unintentional delay under 37 C.F.R. §1.137(b)
Copy: The 23 June, 2004, Office action
Copy: Notice of Abandonment

PTO/SB/64 (10-05)
Approved for use through 07/31/2006. OMB 0651-0031
U.S. Patent and Trademark Office; U.S. DEPARTMENT OF COMMERCE
Under the Paperwork Reduction Act of 1995, no persons are required to respond to a collection of information unless it displays a valid OMB control number.

PETITION FOR REVIVAL OF AN APPLICATION FOR PATENT ABANDONED UNINTENTIONALLY UNDER 37 CFR 1.137(b)

Docket Number (Optional)

First named inventor:

Application No.: Art Unit:

Filed: Examiner:

Title:

Attention: Office of Petitions
Mail Stop Petition
Commissioner for Patents
P.O. Box 1450
Alexandria, VA 22313-1450
FAX (571) 273-8300

NOTE: If information or assistance is needed in completing this form, please contact Petitions Information at (571) 272-3282.

The above-identified application became abandoned for failure to file a timely and proper reply to a notice or action by the United States Patent and Trademark Office. The date of abandonment is the day after the expiration date of the period set for reply in the office notice or action plus an extensions of time actually obtained.

APPLICANT HEREBY PETITIONS FOR REVIVAL OF THIS APPLICATION

NOTE: A grantable petition requires the following items:
(1) Petition fee;
(2) Reply and/or issue fee;
(3) Terminal disclaimer with disclaimer fee - required for all utility and plant applications filed before June 8, 1995; and for all design applications; and
(4) Statement that the entire delay was unintentional.

1.Petition fee
☐ Small entity-fee $ _____ (37 CFR 1.17(m)). Applicant claims small entity status. See 37 CFR 1.27.

☐ Other than small entity – fee $ _____ (37 CFR 1.17(m))

2. Reply and/or fee
A. The reply and/or fee to the above-noted Office action in the form of _____(identify type of reply):

☐ has been filed previously on _____.
☐ is enclosed herewith.

B. The issue fee and publication fee (if applicable) of $ _____.
☐ has been paid previously on _____.
☐ is enclosed herewith.

This collection of information is required by 37 CFR 1.137(b). The information is required to obtain or retain a benefit by the public which is to file (and by the USPTO to process) an application. Confidentiality is governed by 35 U.S.C. 122 and 37 CFR 1.11 and 1.14. This collection is estimated to take 1.0 hour to complete, including gathering, preparing, and submitting the completed application form to the USPTO. Time will vary depending upon the individual case. Any comments on the amount of time you require to complete this form and/or suggestions for reducing this burden, should be sent to the Chief Information Officer, U.S. Patent and Trademark Office, U.S. Department of Commerce, P.O. Box 1450, Alexandria, VA 22313-1450. DO NOT SEND FEES OR COMPLETED FORMS TO THIS ADDRESS. **SEND TO: Mail Stop Petition, Commissioner for Patents, P.O. Box 1450, Alexandria, VA 22313-1450.**

If you need assistance in completing the form, call 1-800-PTO-9199 and select option 2.

Under the Paperwork Reduction Act of 1995, no persons are required to respond to a collection of information unless it displays a valid OMB control number.

3. Terminal disclaimer with disclaimer fee

☐ Since this utility/plant application was filed on or after June 8, 1995, no terminal disclaimer is required.

☐ A terminal disclaimer (and disclaimer fee (37 CFR 1.20(d)) of $ _____ for a small entity or $ _____ for other than a small entity) disclaiming the required period of time is enclosed herewith (see PTO/SB/63).

4. STATEMENT: The entire delay in filing the required reply from the due date for the required reply until the filing of a grantable petition under 37 CFR 1.137(b) was unintentional. [NOTE: The United States Patent and Trademark Office may require additional information if there is a question as to whether either the abandonment or the delay in filing a petition under 37 CFR 1.137(b) was unintentional (MPEP 711.03(c), subsections (III)(C) and (D)).]

WARNING:

Petitioner/applicant is cautioned to avoid submitting personal information in documents filed in a patent application that may contribute to identity theft. Personal information such as social security numbers, bank account numbers, or credit card numbers (other than a check or credit card authorization form PTO-2038 submitted for payment purposes) is never required by the USPTO to support a petition or an application. If this type of personal information is included in documents submitted to the USPTO, petitioners/applicants should consider redacting such personal information from the documents before submitting them to the USPTO. Petitioner/applicant is advised that the record of a patent application is available to the public after publication of the application (unless a non-publication request in compliance with 37 CFR 1.213(a) is made in the application) or issuance of a patent. Furthermore, the record from an abandoned application may also be available to the public if the application is referenced in a published application or an issued patent (see 37 CFR 1.14). Checks and credit card authorization forms PTO-2038 submitted for payment purposes are not retained in the application file and therefore are not publicly available.

Signature	Date
Typed or printed name	Registration Number, if applicable
Address	Telephone Number
Address	

Enclosures: ☐ Fee Payment

☐ Reply

☐ Terminal Disclaimer Form

☐ Additional sheets containing statements establishing unintentional delay

☐ Other:_____

CERTIFICATE OF MAILING OR TRANSMISSION [37 CFR 1.8(a)]

I hereby certify that this correspondence is being:

☐ Deposited with the United States Postal Service on the date shown below with sufficient postage as first class mail in an envelope addressed to: Mail Stop Petition, Commissioner for Patents, P. O. Box 1450, Alexandria, VA 22313-1450.

☐ Transmitted by facsimile on the date shown below to the United States Patent and Trademark Office as (571) 273-8300.

Date	Signature
	Typed or printed name of person signing certificate

Privacy Act Statement

The **Privacy Act of 1974 (P.L. 93-579)** requires that you be given certain information in connection with your submission of the attached form related to a patent application or patent. Accordingly, pursuant to the requirements of the Act, please be advised that: (1) the general authority for the collection of this information is 35 U.S.C. 2(b)(2); (2) furnishing of the information solicited is voluntary; and (3) the principal purpose for which the information is used by the U.S. Patent and Trademark Office is to process and/or examine your submission related to a patent application or patent. If you do not furnish the requested information, the U.S. Patent and Trademark Office may not be able to process and/or examine your submission, which may result in termination of proceedings or abandonment of the application or expiration of the patent.

The information provided by you in this form will be subject to the following routine uses:

1. The information on this form will be treated confidentially to the extent allowed under the Freedom of Information Act (5 U.S.C. 552) and the Privacy Act (5 U.S.C 552a). Records from this system of records may be disclosed to the Department of Justice to determine whether disclosure of these records is required by the Freedom of Information Act.
2. A record from this system of records may be disclosed, as a routine use, in the course of presenting evidence to a court, magistrate, or administrative tribunal, including disclosures to opposing counsel in the course of settlement negotiations.
3. A record in this system of records may be disclosed, as a routine use, to a Member of Congress submitting a request involving an individual, to whom the record pertains, when the individual has requested assistance from the Member with respect to the subject matter of the record.
4. A record in this system of records may be disclosed, as a routine use, to a contractor of the Agency having need for the information in order to perform a contract. Recipients of information shall be required to comply with the requirements of the Privacy Act of 1974, as amended, pursuant to 5 U.S.C. 552a(m).
5. A record related to an International Application filed under the Patent Cooperation Treaty in this system of records may be disclosed, as a routine use, to the International Bureau of the World Intellectual Property Organization, pursuant to the Patent Cooperation Treaty.
6. A record in this system of records may be disclosed, as a routine use, to another federal agency for purposes of National Security review (35 U.S.C. 181) and for review pursuant to the Atomic Energy Act (42 U.S.C. 218(c)).
7. A record from this system of records may be disclosed, as a routine use, to the Administrator, General Services, or his/her designee, during an inspection of records conducted by GSA as part of that agency's responsibility to recommend improvements in records management practices and programs, under authority of 44 U.S.C. 2904 and 2906. Such disclosure shall be made in accordance with the GSA regulations governing inspection of records for this purpose, and any other relevant (*i.e.*, GSA or Commerce) directive. Such disclosure shall not be used to make determinations about individuals.
8. A record from this system of records may be disclosed, as a routine use, to the public after either publication of the application pursuant to 35 U.S.C. 122(b) or issuance of a patent pursuant to 35 U.S.C. 151. Further, a record may be disclosed, subject to the limitations of 37 CFR 1.14, as a routine use, to the public if the record was filed in an application which became abandoned or in which the proceedings were terminated and which application is referenced by either a published application, an application open to public inspection or an issued patent.
9. A record from this system of records may be disclosed, as a routine use, to a Federal, State, or local law enforcement agency, if the USPTO becomes aware of a violation or potential violation of law or regulation.

UNITED STATES PATENT AND TRADEMARK OFFICE

UNITED STATES DEPARTMENT OF COMMERCE
United States Patent and Trademark Office
Address: COMMISSIONER FOR PATENTS
P.O. Box 1450
Alexandria, Virginia 22313-1450
www.uspto.gov

APPLICATION NO.	FILING DATE	FIRST NAMED INVENTOR	ATTORNEY DOCKET NO.	CONFIRMATION NO.
10/022,406	12/20/2001	Dirk Nehring		5065

7590 05/20/2005

deltaT GmbH
Kerkrader Strasse 11
Hessen, 35394
GERMANY

EXAMINER
SODERQUIST, ARLEN

ART UNIT	PAPER NUMBER
1743	

DATE MAILED: 05/20/2005

Please find below and/or attached an Office communication concerning this application or proceeding.

Notice of Abandonment	Application No.	Applicant(s)
	10/022,406	NEHRING ET AL.
	Examiner	Art Unit
	Arlen Soderquist	1743

-- The MAILING DATE of this communication appears on the cover sheet with the correspondence address--

This application is abandoned in view of:

1. ☒ Applicant's failure to timely file a proper reply to the Office letter mailed on 23 June 2004.
   (a) ☐ A reply was received on _____ (with a Certificate of Mailing or Transmission dated _____), which is after the expiration of the period for reply (including a total extension of time of _____ month(s)) which expired on _____.
   (b) ☐ A proposed reply was received on _____, but it does not constitute a proper reply under 37 CFR 1.113 (a) to the final rejection.
   (A proper reply under 37 CFR 1.113 to a final rejection consists only of: (1) a timely filed amendment which places the application in condition for allowance; (2) a timely filed Notice of Appeal (with appeal fee); or (3) a timely filed Request for Continued Examination (RCE) in compliance with 37 CFR 1.114).
   (c) ☒ A reply was received on 20 September 2004 but it does not constitute a proper reply, or a bona fide attempt at a proper reply, to the non-final rejection. See 37 CFR 1.85(a) and 1.111. (See explanation in box 7 below).
   (d) ☐ No reply has been received.

2. ☐ Applicant's failure to timely pay the required issue fee and publication fee, if applicable, within the statutory period of three months from the mailing date of the Notice of Allowance (PTOL-85).
   (a) ☐ The issue fee and publication fee, if applicable, was received on _____ (with a Certificate of Mailing or Transmission dated _____), which is after the expiration of the statutory period for payment of the issue fee (and publication fee) set in the Notice of Allowance (PTOL-85).
   (b) ☐ The submitted fee of $_____ is insufficient. A balance of $_____ is due.
   The issue fee required by 37 CFR 1.18 is $_____. The publication fee, if required by 37 CFR 1.18(d), is $_____.
   (c) ☐ The issue fee and publication fee, if applicable, has not been received.

3. ☐ Applicant's failure to timely file corrected drawings as required by, and within the three-month period set in, the Notice of Allowability (PTO-37).
   (a) ☐ Proposed corrected drawings were received on _____ (with a Certificate of Mailing or Transmission dated _____), which is after the expiration of the period for reply.
   (b) ☐ No corrected drawings have been received.

4. ☐ The letter of express abandonment which is signed by the attorney or agent of record, the assignee of the entire interest, or all of the applicants.

5. ☐ The letter of express abandonment which is signed by an attorney or agent (acting in a representative capacity under 37 CFR 1.34(a)) upon the filing of a continuing application.

6. ☐ The decision by the Board of Patent Appeals and Interference rendered on _____ and because the period for seeking court review of the decision has expired and there are no allowed claims.

7. ☒ The reason(s) below:

Applicant has failed to correct the deficiencies noted in the of notice of fee deficiency, mailed September 24, 2004.

Arlen Soderquist

ARLEN SODERQUIST
PRIMARY EXAMINER

Petitions to revive under 37 CFR 1.137(a) or (b), or requests to withdraw the holding of abandonment under 37 CFR 1.181, should be promptly filed to minimize any negative effects on patent term.

UNITED STATES PATENT AND TRADEMARK OFFICE

UNITED STATES DEPARTMENT OF COMMERCE
United States Patent and Trademark Office
Address: COMMISSIONER FOR PATENTS
P.O. Box 1450
Alexandria, Virginia 22313-1450
www.uspto.gov

APPLICATION NO.	FILING DATE	FIRST NAMED INVENTOR	ATTORNEY DOCKET NO.	CONFIRMATION NO.
10/022,406	12/20/2001	Dirk Nehring		5065

7590 06/23/2004

DIRK NEHRING
VERSAILLER STR. 1
GIESSEN, HESSEN, 35394
GERMANY

EXAMINER
SODERQUIST, ARLEN

ART UNIT	PAPER NUMBER
1743	

DATE MAILED: 06/23/2004

Please find below and/or attached an Office communication concerning this application or proceeding.

Office Action Summary	Application No.	Applicant(s)
	10/022,406	NEHRING ET AL.
	Examiner	Art Unit
	Arlen Soderquist	1743

-- The MAILING DATE of this communication appears on the cover sheet with the correspondence address --

Period for Reply

A SHORTENED STATUTORY PERIOD FOR REPLY IS SET TO EXPIRE 3 MONTH(S) FROM THE MAILING DATE OF THIS COMMUNICATION.

- Extensions of time may be available under the provisions of 37 CFR 1.136(a). In no event, however, may a reply be timely filed after SIX (6) MONTHS from the mailing date of this communication.
- If the period for reply specified above is less than thirty (30) days, a reply within the statutory minimum of thirty (30) days will be considered timely.
- If NO period for reply is specified above, the maximum statutory period will apply and will expire SIX (6) MONTHS from the mailing date of this communication.
- Failure to reply within the set or extended period for reply will, by statute, cause the application to become ABANDONED (35 U.S.C. § 133). Any reply received by the Office later than three months after the mailing date of this communication, even if timely filed, may reduce any earned patent term adjustment. See 37 CFR 1.704(b).

Status

1)☐ Responsive to communication(s) filed on _____.

2a)☐ This action is **FINAL**. 2b)☒ This action is non-final.

3)☐ Since this application is in condition for allowance except for formal matters, prosecution as to the merits is closed in accordance with the practice under *Ex parte Quayle*, 1935 C.D. 11, 453 O.G. 213.

Disposition of Claims

4)☒ Claim(s) *1-19* is/are pending in the application.

4a) Of the above claim(s) _____ is/are withdrawn from consideration.

5)☐ Claim(s) _____ is/are allowed.

6)☒ Claim(s) *1-19* is/are rejected.

7)☐ Claim(s) _____ is/are objected to.

8)☐ Claim(s) _____ are subject to restriction and/or election requirement.

Application Papers

9)☒ The specification is objected to by the Examiner.

10)☒ The drawing(s) filed on *20 December 2001* is/are: a)☐ accepted or b)☒ objected to by the Examiner.

Applicant may not request that any objection to the drawing(s) be held in abeyance. See 37 CFR 1.85(a).

Replacement drawing sheet(s) including the correction is required if the drawing(s) is objected to. See 37 CFR 1.121(d).

11)☐ The oath or declaration is objected to by the Examiner. Note the attached Office Action or form PTO-152.

Priority under 35 U.S.C. § 119

12)☒ Acknowledgment is made of a claim for foreign priority under 35 U.S.C. § 119(a)-(d) or (f).

a)☐ All b)☐ Some * c)☒ None of:

1.☒ Certified copies of the priority documents have been received.

2.☐ Certified copies of the priority documents have been received in Application No. _____.

3.☐ Copies of the certified copies of the priority documents have been received in this National Stage application from the International Bureau (PCT Rule 17.2(a)).

* See the attached detailed Office action for a list of the certified copies not received.

Attachment(s)

1) ☒ Notice of References Cited (PTO-892)
2) ☐ Notice of Draftsperson's Patent Drawing Review (PTO-948)
3) ☐ Information Disclosure Statement(s) (PTO-1449 or PTO/SB/08) Paper No(s)/Mail Date _____.
4) ☐ Interview Summary (PTO-413) Paper No(s)/Mail Date. _____.
5) ☐ Notice of Informal Patent Application (PTO-152)
6) ☐ Other: _____.

1. Acknowledgment is made of applicant's claim for foreign priority based on an application filed in Germany on October 10, 2001. It is noted, however, that applicant has not filed a certified copy of the 0124070.2 application as required by 35 U.S.C. 119(b).

2. The drawings are objected to under 37 CFR 1.83(a). The drawings must show every feature of the invention specified in the claims. Therefore, the clip for sealing the two double walled shells, the outside locking mechanism of claim 11, the eyelet of claim 14, the movable hinge of claim 17, the carrying strap of claim 18 and the thermometer of claim 19 must be shown or the feature(s) canceled from the claim(s). No new matter should be entered.

Corrected drawing sheets are required in reply to the Office action to avoid abandonment of the application. Any amended replacement drawing sheet should include all of the figures appearing on the immediate prior version of the sheet, even if only one figure is being amended. The figure or figure number of an amended drawing should not be labeled as "amended." If a drawing figure is to be canceled, the appropriate figure must be removed from the replacement sheet, and where necessary, the remaining figures must be renumbered and appropriate changes made to the brief description of the several views of the drawings for consistency. Additional replacement sheets may be necessary to show the renumbering of the remaining figures. The replacement sheet(s) should be labeled "Replacement Sheet" in the page header (as per 37 CFR 1.84(c)) so as not to obstruct any portion of the drawing figures. If the changes are not accepted by the examiner, the applicant will be notified and informed of any required corrective action in the next Office action. The objection to the drawings will not be held in abeyance.

3. The disclosure is objected to because of the following informalities: on page 4 of the specification, the last two sentences refer to claim 1 and the claim in an improper manner. The claims are to rely on the disclosure in the specification and drawings for their support. Additionally the disclosure is not supposed to change after the application has been filed. Since the claims often change during the processing of an application, statements in the specification that rely on the claims as are found in these two sentences would cause the disclosure to be changed as the claims change. For that reason the reference to the claims is improper.

Appropriate correction is required.

4. Claims 2-3 and 12-14 are rejected as failing to define the invention in the manner required by 35 U.S.C. 112, second paragraph.

The claim(s) are narrative in form and replete with indefinite and functional or operational language. The structure which goes to make up the device must be clearly and positively specified. The structure must be organized and correlated in such a manner as to present a complete operative device. The claim(s) must be in one sentence form only. Note the format of the claims in the patent(s) cited. It is not clear what structure constitutes a clip (the sealing tie mentioned on page 6 of the specification but not shown in the figures or another structure?) or an eyelet.

5. The following is a quotation of the appropriate paragraphs of 35 U.S.C. 102 that form the basis for the rejections under this section made in this Office action:

> A person shall be entitled to a patent unless –
>
> (b) the invention was patented or described in a printed publication in this or a foreign country or in public use or on sale in this country, more than one year prior to the date of application for patent in the United States.

6. Claims 1, 4-7 and 9-10 are rejected under 35 U.S.C. 102(b) as being clearly anticipated by Bruce (US 5,235,819). In the patent Bruce teaches an apparatus for storing and distributing materials. The apparatus maintains products at an intended temperature during transport and storage at an ambient temperature deviating from the intended temperature. The invention features a container that holds the products and whose walls render heat transfer difficult. The container includes a main container body with a bottom and a side section that together define one or more integrated compartments (a double walled structure) suitable for storing a solidifiable substance. The container includes a lid which also has an integrated compartment for storing a solidifiable substance. When the lid is positioned on the main container body there is provided a solidifiable substance confinement enclosing the material storage space in the container from all sides. By subjecting the container and the solidifiable substance in its wall compartments (4, 4') to cold, so as to solidify the substance, subsequently inserting the products into the container after it has been moved to a room having a temperature adapted to the products, and positioning the lid over the container main body, an uninterrupted layer of solidifiable substance is provided around the entire material storage space. Column 2, lines 22-38 teach that water is one possible medium that is especially suited for materials which are to be maintained at 0 °C. or material to be maintained at a predetermined temperature below 0 °C, an additive such as salt can be added to lower the freezing temperature of the freezable substance.

Moreover, in situations when it is desirable to maintain the temperature of the product above 0□C, such as for a live lobster or blossoming flower products, a solidifiable substance having a higher solidification temperature is utilized. For example, paraffin hydrocarbon compounds such as tetradecane, pentadecane and hexadecane with solidification temperatures of 5.8°, 9.7° and 18.0 °C, respectively, can be relied upon. Various hydrocarbon alcohol compounds are also possible. Column 5, lines 35-40 teach that if added protection is deemed desirable, sealing means such as an elastomeric seal placed between rim 36 and flange 62 or interengaging molded surfaces (e.g., saw tooth, labyrinth) can be provided in the contacting surfaces of flange 62 and upper edge 36. Column 6, lines 17-28 teach that a suitable material for the main body container and lid includes HO polyethylene or polypropylene (transparent materials) as it is durable for handling the rough treatment associated with freight carrying and is sufficiently adaptable to handle the explosive effect of some of the solidifiable substance usable in the compartments. Such material can easily be injection molded to form the components of the present invention. If the container of the present invention is to be strictly used with a solidifiable substance that does not expand upon solidification then a less flexible material such as aluminum sheet metal can be relied upon. Table 1 shows a variety of compositions for the solidifiable material including a saline solution and paraffins.

7. The following is a quotation of 35 U.S.C. 103(a) which forms the basis for all obviousness rejections set forth in this Office action:

> (a) A patent may not be obtained though the invention is not identically disclosed or described as set forth in section 102 of this title, if the differences between the subject matter sought to be patented and the prior art are such that the subject matter as a whole would have been obvious at the time the invention was made to a person having ordinary skill in the art to which said subject matter pertains. Patentability shall not be negatived by the manner in which the invention was made.

The factual inquiries set forth in *Graham* v. *John Deere Co.*, 383 U.S. 1, 148 USPQ 459 (1966), that are applied for establishing a background for determining obviousness under 35 U.S.C. 103(a) are summarized as follows:

1. Determining the scope and contents of the prior art.
2. Ascertaining the differences between the prior art and the claims at issue.
3. Resolving the level of ordinary skill in the pertinent art.
4. Considering objective evidence present in the application indicating obviousness or nonobviousness.

8. Claims 2-3, 12-13 and 15-16 are rejected under 35 U.S.C. 103(a) as being unpatentable over Bruce as applied to claim 1 above, and further in view of Basso (US 4,517,815). Bruce does not teach multiple sections being combined to form the enclosed space.

In the patent Basso teaches an insulated modular cooler having a plurality of tubular housing sections and a plurality of tubular hollow-walled insert housings containing a refrigerant in the hollow walls of the insert housings. The tubular housing sections can be secured end to end to form an elongated tubular body into which the tubular insert housings are slidably received. The cooler further comprises a top end cap adapted to engage the top of the tubular cooler body as well as the top of each individual cooler housing sections, and a lower end cap adapted to engage the bottom of the tubular body as well as the bottom of each individual cooler housing section. See figures 1-3 teaching that the disadvantages associated with prior art devices when the size of the cooler is not close the size of the material being stored is overcome by providing an insulated modular cooler having a plurality of detachable housing sections, each section comprising a tubular member having hollow walls and containing a refrigerant in the hollow walls. The sections are attached end to end so as to provide one or more cooled compartments adapted to fully enclose the containers or other products therein. Moreover, as products contained in each section are consumed, the section can be detached from the remaining sections so as to reduce the bulk of the cooler as the contents are consumed. The cooler housing sections (12,14,16) each include an insert housing (22,24,26). The inner bores of the tubular insert housings communicate end to end so as to form a central cooling chamber (28) throughout the cooler (10). The annular walls of each of the insert housings define a hollow annular chamber within each insert housing body. The closed chambers are filled with a gel (29), water or other refrigerant to be frozen when the insert housing is placed in a conventional freezer or other cooling apparatus.. The insert housings are identical, but are separately designated for clarity in defining the position of the insert housings within the cooler. One end of a tubular wall (30) includes a recessed, tubular end portion (32). The recessed end portion includes external threads (34) adapted to mate with corresponding internal threads on a sleeve wall portion (38) of a cap member (18) or an extended sleeve portion (42) in the other end of the tubular wall. Column 4 lines 11 to 16 teach it is to be understood that the cooler body need not be cylindrical

and other means for securing end caps in place, such as a tongue and groove arrangement, are also possible.

It would have been obvious to one of ordinary skill in the art at the time the invention was made to incorporate the modular sections of Bossa into the structure of Bruce and incorporate a tongue and groove mechanism to connect them as taught by Bossa because of the ability to vary the size of the cooled compartment depending on the amount or size of the material being transported or stored and adapt the cooled space to efficiently cool the materials as taught by Bossa.

9. Claims 5 and 8 are rejected under 35 U.S.C. 103(a) as being unpatentable over Bruce as applied to claims 1 or 5 above, and further in view of Drake (US 3,858,410) or Malach (US 6,482,332). Bruce does not teach an ethanol water mixture or butanediol mixture as the solidifiable substance.

In the patent Drake teaches a combination dental material mixing slab holder and cooler which includes a base plate having a pair of spaced, upwardly projecting ribs for receiving a mixing slab and a central well, a sealed container in said central well and a reusable heat sink means within said sealed container. Column 2, lines 8-20 teach that the eat sink means is a stable liquid or solid material, having a relatively high latent or sensible heat capacity. Preferably the material has a latent heat capacity and undergoes a phase change at a temperature below ambient, such as water, water-ethanol solutions containing up to about 50 percent by volume ethanol, various brines and the like. Exemplary of the brines that can be utilized is an aqueous solution containing about 25 weight percent sodium chloride, an aqueous solution containing about 25 weight percent calcium chloride and the like.

In the patent Malach teaches various phase change formulations usable in thermal packaging systems using a single phase change material (PCM) part in liquid and part in solid form to confine the temperature of the product within a predetermined range. The temperature ranges are determined by the selection of PCM formulation. The phase change materials selected have high latent heats of fusion and maintain relatively constant temperatures as they change phase. This permits light weight packaging with the maintenance of temperatures in narrow, preselected ranges over extended periods of time. A phase change formulation that can be adjusted to freeze at temperatures from +40 °C. to below –30 °C. is disclosed, comprising

butanediol, selected percentages of distilled water, and nucleating agents. The phase change occurs over a narrow temperature range making this an ideal temperature control media. Nucleating or other agents are included to narrow the temperature range over which the phase change occurs. Column 3, line 60 to column 4, line 4 teach various goods such as biological products, blood products, vaccines, pharmaceuticals, chocolate products, latex paints with specific examples including whole blood 1 to 10 °C., Factor VIII (used by hemophiliacs) 2 to 8 °C., diagnostic blood samples 1 to 10 °C., some vaccines 2 to 10 °C., blood platelets 20 to 24 °C., and chocolate approximately 10 °C for storage by the system under controlled product temperatures. Columns 8-12 give several examples of compositions.

It would have been obvious to one of ordinary skill in the art at the time the invention was made to incorporate the ethanol water and butanediol water compositions of Drake or Malach into the device of Bruce because of their use for similar systems and products as taught by Drake and Malach.

10. Claims 11, 14 and 17-19 are rejected under 35 U.S.C. 103(a) as being unpatentable over Bruce or Bruce in view of Bossa as applied to claims 1-3 and 12 above, and further in view of Sheehan (US 4,322,954), MacDonald US 5,058,397) or Schea, III (US 5,181,394). Bruce does not teach a latch, eyelet, hinge, carrying strap or thermometer.

In the patent Sheehan teaches a portable cooler for medicine that contains a material to maintain the temperature of the contents at a desired level. The device includes a carrying strap (14) and latches (20).

In the patent MacDonald teaches a cryogenic storage container for biological specimens that includes a cooling gel or medium to keep the specimens at a temperature below ambient. The device includes a hinges (22,33) and latches (25,37).

In the patent Schea, II teaches a freeze protective shipping container for containers of liquid compositions, such as solutions of biologically active proteins, which are susceptible to physicochemical change upon freezing. Preferred container holders have double sidewalls and a freeze indicator adjacent a container-accommodating cavity. A phase change material such as a carboxymethylcellulose gel is disposed in the enclosed space between sidewalls and freezes at a temperature higher than the nucleation temperature of the composition. A freeze indicator

provides an irreversible visual signal upon reaching a temperature intermediate the nucleation temperature of the liquid composition and the freezing temperature of the phase change material. Column 4 lines 52-64 teach that the freeze indicator may have a variety of conformations and its only operational constraint is that it provide an irreversible visual signal indicative that a particular low temperature has been reached in the space where the vials are disposed. Thus, thermocouple devices of varying kinds and simple devices such as described in U.S. Pat. No. 4,191,125 are quite suitable as the freeze indicators.

It would have been obvious to one of ordinary skill in the art at the time the invention was made to incorporate a structure such as the latch of Sheehan or MacDonald or another known closure structure into the Bruce device because of it known ability to provide a secure closure which Bruce teaches might be desirable in some circumstances. It would have been obvious to one of ordinary skill in the art at the time the invention was made to incorporate the hinge of MacDonald, the carrying strap of Sheehan or the temperature indicator of Schea, III into the Bruce device because of the ability to transport the device as taught by Sheehan, the benefits of a hinge as taught by MacDonald or the ability to monitor the temperature and determine if it has gone beyond the desired temperature range as taught by Schea, III.

11. The prior art made of record and not relied upon is considered pertinent to applicant's disclosure. The additionally cited art relates to containers having cooling agents therein.

Any inquiry concerning this communication or earlier communications from the examiner should be directed to Arlen Soderquist whose current telephone number is (571) 272-1265 as a result of the examiner moving to the new USPTO location. The examiner's schedule is variable between the hours of about 5:30 AM to about 5:00 PM on Monday through Thursday and alternate Fridays.

A general phone number for the organization to which this application is assigned is (571) 272-1700. The fax phone number to file official papers for this application or proceeding is (703) 872-9306.

Information regarding the status of an application may be obtained from the Patent Application Information Retrieval (PAIR) system. Status information for published applications may be obtained from either Private PAIR or Public PAIR. Status information for unpublished applications is available through Private PAIR only. For more information about the PAIR system, see http://pair-direct.uspto.gov. Should you have questions on access to the Private PAIR system, contact the Electronic Business Center (EBC) at 866-217-9197 (toll-free).

Arlen Soderquist June 22, 2004
ARLEN SODERQUIST
PRIMARY EXAMINER

Notice of References Cited	Application/Control No. 10/022,406	Applicant(s)/Patent Under Reexamination NEHRING ET AL.	
	Examiner Arlen Soderquist	Art Unit 1743	Page 1 of 2

U.S. PATENT DOCUMENTS

*		Document Number Country Code-Number-Kind Code	Date MM-YYYY	Name	Classification
	A	US-3,401,535	09-1968	PALMER GEORGE L	62/457.5
	B	US-3,802,220	04-1974	Pompo, Thomas B.	62/530
	C	US-3,834,456	09-1974	Clarke et al.	165/104.17
	D	US-3,858,410	01-1975	Drake, Daniel H.	62/458
	E	US-3,940,249	02-1976	McClurg, James E.	436/174
	F	US-4,322,954	04-1982	Sheehan et al.	62/371
	G	US-4,357,809	11-1982	Held et al.	62/457.4
	H	US-4,498,312	02-1985	Schlosser, Edward P.	62/457.2
	I	US-4,517,815	05-1985	Basso, Peter J.	62/457.5
	J	US-5,058,397	10-1991	MacDonald, Richard E.	62/457.2
	K	US-5,105,627	04-1992	Kurita, Susumu	62/62
	L	US-5,181,394	01-1993	Schea et al.	62/371
	M	US-5,235,819	08-1993	Bruce, Hans	62/60

FOREIGN PATENT DOCUMENTS

*		Document Number Country Code-Number-Kind Code	Date MM-YYYY	Country	Name	Classification
	N					
	O					
	P					
	Q					
	R					
	S					
	T					

NON-PATENT DOCUMENTS

*		Include as applicable: Author, Title Date, Publisher, Edition or Volume, Pertinent Pages)
	U	
	V	
	W	
	X	

*A copy of this reference is not being furnished with this Office action. (See MPEP § 707.05(a).)
Dates in MM-YYYY format are publication dates. Classifications may be US or foreign.

Notice of References Cited	Application/Control No. 10/022,406	Applicant(s)/Patent Under Reexamination NEHRING ET AL.	
	Examiner Arlen Soderquist	Art Unit 1743	Page 2 of 2

U.S. PATENT DOCUMENTS

*		Document Number Country Code-Number-Kind Code	Date MM-YYYY	Name	Classification
	A	US-5,934,099	08-1999	Cook et al.	62/457.2
	B	US-6,169,247	01-2001	Craft et al.	174/15.1
	C	US-6,209,343	04-2001	Owen, Donald R.	62/457.2
	D	US-6,361,746	03-2002	Wlodarski, Julie Ann	422/104
	E	US-6,482,332	11-2002	Malach, Ted J.	252/70
	F	US-			
	G	US-			
	H	US-			
	I	US-			
	J	US-			
	K	US-			
	L	US-			
	M	US-			

FOREIGN PATENT DOCUMENTS

*		Document Number Country Code-Number-Kind Code	Date MM-YYYY	Country	Name	Classification
	N					
	O					
	P					
	Q					
	R					
	S					
	T					

NON-PATENT DOCUMENTS

*		Include as applicable: Author, Title Date, Publisher, Edition or Volume, Pertinent Pages)
	U	
	V	
	W	
	X	

*A copy of this reference is not being furnished with this Office action. (See MPEP § 707.05(a).)
Dates in MM-YYYY format are publication dates. Classifications may be US or foreign.

This Page is Inserted by IFW Indexing and Scanning Operations and is not part of the Official Record

BEST AVAILABLE IMAGES

Defective images within this document are accurate representations of the original documents submitted by the applicant.

Defects in the images include but are not limited to the items checked:

- ☐ BLACK BORDERS
- ☐ IMAGE CUT OFF AT TOP, BOTTOM OR SIDES
- ☐ FADED TEXT OR DRAWING
- ☐ BLURRED OR ILLEGIBLE TEXT OR DRAWING
- ☐ SKEWED/SLANTED IMAGES
- ☐ COLOR OR BLACK AND WHITE PHOTOGRAPHS
- ☐ GRAY SCALE DOCUMENTS
- ☑ LINES OR MARKS ON ORIGINAL DOCUMENT
- ☐ REFERENCE(S) OR EXHIBIT(S) SUBMITTED ARE POOR QUALITY
- ☐ OTHER: _____

IMAGES ARE BEST AVAILABLE COPY.
As rescanning these documents will not correct the image problems checked, please do not report these problems to the IFW Image Problem Mailbox.

UNITED STATES PATENT AND TRADEMARK OFFICE

Commissioner for Patents
United States Patent and Trademark Office
P.O. Box 1450
Alexandria, VA 22313-1450
www.uspto.gov

JJGJR.: 05-06

Paper No: __

COPY MAILED

JUN 0 5 2006

OFFICE OF PETITIONS

DELTAT GMBH
KERKRADER STRASSE 11
HESSEN 35394 DE GERMANY

In re Application of	:	
Nehring, et al.	:	DECISION
Application No.: 10/022,406	:	
Filing Date: 20 December, 2001	:	
Attorney Docket No. (None)	:	

This is a decision on the petition filed on 6 and 7 April, 2006, to revive the instant application under 37 C.F.R. §1.137(b) as having as abandoned due to unintentional delay as a request for the withdrawal of the holding of abandonment been abandoned due to unintentional delay.

For the reasons set forth below the petition as considered under 37 C.F.R. §1.137(b) is **DISMISSED**.

NOTES:

(1) Any petition (and fee) for reconsideration of this decision must be submitted within two (2) months from the mail date of this decision. Extensions of time under 37 C.F.R. §1.136(a) are permitted. The reconsideration request should include a cover letter entitled "Renewed Petition under 37 C.F.R. §1.137(a)."

(It is noted, however, that Petitioner may be unable to present a satisfactory showing to support a petition under 37 C.F.R. §1.137(a), and Petitioner's only alternative will be to file a petition under 37 C.F.R. §1.137(b).)

(2) Thereafter, there will be no further reconsideration of this matter.

BACKGROUND

The record reflects that:

- Petitioner failed to reply timely and properly to a non-final Office action mailed on 23 June, 2004, with reply due absent extension of time on or before 23 September, 2004–a copy is enclosed for Petitioner's review;

- the application went abandoned after midnight 23 September, 2004;

- the Office mailed a Notice of Abandonment, indicating a failure to respond to the 23 June, 2004, Office action, on 20 May, 2005;

- Petitioner averred in the original petition that the reason for the abandonment was that the Office had failed to process a payment from Petitioner to the Office–while it is true that the Office has not processed the addition payment, and Petitioner must resubmit the payment/authorization along with that for any renewed petition, the focus at this point also is Petitioner's failure to reply timely and properly to the 23 June, 2004, Office action, and the petition was dismissed on 10 February, 2006;

- the instant application avers unintentional delay–the requirements of which are petition, fee, reply, statement/showing of unintentional delay, and–where appropriate–a terminal disclaimer and fee.

Petitioner appears not to be reading correctly the fee schedule on the Office website (www.uspto.gov , http://www.uspto.gov/web/offices/ac/qs/ope/fee2006may15.htm) and has not paid the proper petition fee (at this writing $750.00 or $1,500.00, however, Petitioner always should review the website for updates).

Petitioner has not satisfied the fee requirement.

Petitioner's filings suggest a lack of familiarity with practice before the Office.

Petitioner should review the Office website for discussion the matter in the commentary at MPEP §711.03(c):
http://www.uspto.gov/web/offices/pac/mpep/documents/0700_711_03_c.htm#sect711.03c

STATUTES, REGULATIONS AND ANALYSIS

Congress has authorized the Commissioner to "revive an application if the delay is shown to the

satisfaction of the Commissioner to have been "unavoidable." 35 U.S.C. §133 (1994).[1]

The regulations at 37 C.F.R. §1.137(a) and (b) set forth the requirements for a petitioner to revive a previously unavoidably or unintentionally, respectively, abandoned application under this congressional grant of authority. The language of 35 U.S.C. §133 and 37 C.F.R. §1.137(a) is clear, unambiguous, and without qualification: the delay in tendering the reply to the outstanding Office action, as well as filing the first petition seeking revival, must have been unavoidable for the reply now to be accepted on petition.[2]

Delays in responding properly raise the question whether delays are unavoidable.[3] Where there is a question whether the delay was unavoidable, Petitioners must meet the burden of establishing that the delay was unavoidable within the meaning of 35 U.S.C. §133 and 37 C.F.R. §1.137(a).[4] And the Petitioner must be diligent in attending to the matter.[5] Failure to do so does not constitute the care required under Pratt, and so cannot satisfy the test for diligence and due care.

(By contrast, unintentional delays are those that do not satisfy the very strict statutory and regulatory requirements of unavoidable delay, and also, by definition, are not intentional.[6]))

Allegations as to
Unintentional Delay

The regulatory requirements of a petition under 37 C.F.R. §1.137(b) are the petition, fee, reply, statement/showing of unintentional delay, and–where appropriate–a terminal disclaimer and fee.

Petitioner has not satisfied the petition fee requirement.

---

[1] 35 U.S.C. §133 provides:
35 U.S.C. §133 Time for prosecuting application.
Upon failure of the applicant to prosecute the application within six months after any action therein, of which notice has been given or mailed to the applicant, or within such shorter time, not less than thirty days, as fixed by the Commissioner in such action, the application shall be regarded as abandoned by the parties thereto, unless it be shown to the satisfaction of the Commissioner that such delay was unavoidable.

[2] Therefore, by example, an unavoidable delay in the payment of the Filing Fee might occur if a reply is shipped by the US Postal Service, but due to catastrophic accident, the delivery is not made.

[3] See: *Changes to Patent Practice and Procedure*; *Final Rule Notice*, 62 *Fed. Reg.* at 53158-59 (October 10, 1997), 1203 *Off. Gaz. Pat. Office* at 86-87 (October 21, 1997).

[4] See: In re Application of G, 11 USPQ2d 1378, 1380 (Comm'r Pats. 1989).

[5] See: Diligence in Filing Petitions to Revive and Petitions to Withdraw the Holding of Abandonment, 1124 Off. Gaz. Pat. Office 33 (March 19, 1991). It was and is Petitioner's burden to exercise diligence in seeking either to have the holding of abandonment withdrawn or the application revived. See 1124 Off. Gaz. Pat. Office supra.

[6] Therefore, by example, an unintentional delay in the reply might occur if the reply and transmittal form are to be prepared for shipment by the US Postal Service, but other pressing matters distract one's attention and the mail is not timely deposited for shipment.

CONCLUSION

The petition as considered under 37 C.F.R. §1.137(b) is **dismissed**.

Further correspondence with respect to this matter should be addressed as follows:[7]

By mail: Commissioner for Patents[8]
P.O. Box 1450
Alexandria, VA 22313-1450

By FAX: IFW Formal Filings
(571) 273-8300
ATTN.: Office of Petitions

By hand: Mail Stop: Petition
Customer Service Window
Randolph Building
401 Dulany Street
Alexandria, VA 22314

Telephone inquiries concerning this decision may be directed to the undersigned at (571) 272-3214.

John J. Gillon, Jr.
Senior Attorney
Office of Petitions

[7] On July 15, 2005, the Central Facsimile (FAX) Number changed to (571) 273-8300. The old FAX number no longer is in service and (571) 273-8300 will be the only facsimile number recognized for centralized delivery. (For further information. see: http://www.uspto.gov/web/offices/pac/dapp/opla/preognotice/cfax062005.pdf.)

[8] To determine the appropriate addresses for other subject-specific correspondence, refer to the USPTO Web site at www.uspto.gov.

UNITED STATES PATENT AND TRADEMARK OFFICE

Commissioner for Patents
United States Patent and Trademark Office
P.O. Box 1450
Alexandria, VA 22313-1450
www.uspto.gov
DIW Jul-05

BACON & THOMAS, PLLC
625 SLATERS LANE
FOURTH FLOOR
ALEXANDRIA VA 22314

COPY MAILED

JUL 15 2005

OFFICE OF PETITIONS

In re Application of	:	
Lee et al.	:	
Application No. 10/022,411	:	ON PETITION
Filed: 20 December, 2001	:	
Attorney Docket No. LEEL3002/EM	:	

This is a decision on the petition under 37 CFR 1.182, filed on 13 June, 2005, which is treated as a petition requesting the issuance of a duplicate Letters Patent for the above-identified application.

The petition is **GRANTED**.

Since it is U.S. Patent and Trademark Office practice to assure mailing of all papers on the date indicated, there is a strong presumption that papers duly addressed and indicated as mailed, such as the Letters Patent in this application, are timely delivered to the addressee. To overcome this presumption, a verified statement with supporting evidence, such as any records which would disclose the receipt of other correspondence mailed from the U.S. Patent and Trademark Office on or about 9 September, 2003, but fail to disclose receipt of the Letters Patent mailed on that date, should be promptly submitted. Further, copies of records on which receipt of the Letters Patent would have been entered had it been received are required.

However, if the loss of the Letters Patent was not the fault of the U.S. Patent and Trademark Office or if petitioner simply wishes to avoid overcoming the above-noted presumption, a petition may be filed under 37 CFR 1.182 accompanied by a petition fee of $400.00 requesting a duplicate Letters Patent.

Upon receipt of the petition and petition fee, the request for a duplicate Letters Patent will be granted.

Although petitioners' counsel states that the original Letters Patent has not been received, petitioners have not provided any supporting documentation showing that the original Letters Patent was not received.

Nevertheless, as petitioners have submitted authorization to charge the petition fee, the petition is granted.

The petition fee of $400.00 will be charged to counsel's deposit account, No. 02-0200.

A copy of this decision is being forwarded to Publishing Division for issuance of a duplicate Letters Patent. The file is being forwarded to the Files Repository since it is not necessary for issuance of a duplicate Letters Patent.

Telephone inquiries concerning this matter may be directed to the undersigned at (571) 272-3231.

Douglas I. Wood
Senior Petitions Attorney
Office of Petitions

cc: Krystal Paige, South Tower, 8th Floor, Room C-32
(FAX 703-746-4642)

UNITED STATES PATENT AND TRADEMARK OFFICE

COMMISSIONER FOR PATENTS
UNITED STATES PATENT AND TRADEMARK OFFICE
WASHINGTON, D.C. 20231
www.uspto.gov

Paper No. 11

KENYON & KENYON
1025 Connecticut Avenue, N.W.
Washington DC 20036-5405

COPY MAILED

JUL 1 8 2002

OFFICE OF PETITIONS

In re Application of
Muramatsu, *et al.*
Application No. 10/022,434
Filed: December 20, 2001
Attorney Docket No. 10235/12

DECISION ON PETITION

This is a decision on the March 28, 2002 petition requesting that the above-identified application be accepted as having been received in its entirety, including figure 5, on December 20, 2001.

The United States Patent and Trademark Office (hereinafter "USPTO") received this application on December 20, 2001. However, on January 28, 2002, the Office of Initial Patent Examination (hereinafter "OIPE") mailed a "Notice to File Missing Parts of Nonprovisional Application" (hereinafter "notice") noting that although the application had been granted a filing date, figure 5 as described in the specification was missing.[1] The notice further stated that the filing date would be the date of receipt of the missing figure unless a petition was filed that successfully showed that the missing item(s) had been included with the application. The notice further stated that if no action were taken within two months, then the application would retain its December 20, 2001 filing date and would be processed without the referenced figure.

Petitioner responded with the March 28, 2002 filing of this petition. The petition argues that the allegedly missing figure was, in fact, present upon the filing of the application on December 20, 2001. This argument is supported by a copy of the postcard return receipt, indicating patent office receipt of all sheets of drawings with the rest of the application on December 20, 2001.

Accordingly, *this petition is* ***granted***.

The $130.00 petition fee paid for this petition is unnecessary. A refund will be credited to Petitioner's deposit account (da#11-0600).

The application is being returned to OPIE for further processing with a filing date of December 20, 2001 using the substitute drawings supplied with this petition.

Receipt of a declaration is also acknowledged, and OIPE will process same.

---

[1] The notice also noted that the required oath or declaration was missing, and that new drawings were required because the ones supplied with the application did not have the appropriate margins. Finally, the notice stated that a copy of the sequence listing in computer readable format had not been submitted.

Any questions regarding this decision should be directed to Attorney Scott M. Ledford at (703) 306-5593.

Beverly Flanagan
Supervisory Petitions Examiner
Office of Petitions
Office of the Deputy Assistant Commissioner
for Patent Policy and Projects

UNITED STATES PATENT AND TRADEMARK OFFICE

Commissioner for Patents
United States Patent and Trademark Office
P.O. Box 1450
Alexandria, VA 22313-1450
www.uspto.gov

HUNTON & WILLIAMS LLP
INTELLECTUAL PROPERTY DEPARTMENT
1900 K STREET, N.W., SUITE 1200
WASHINGTON, DC 20006-1109

MAILED

JUL 28 2009

OFFICE OF PETITIONS

In re Application of	:	
Allison STOLTZ	:	
Application No. 10/022,438	:	DECISION ON PETITION
Filed: December 20, 2001	:	
Attorney Docket No. 52493.000230	:	

This is a decision on the petition, filed May 21, 2009, which is being treated as a petition under 37 CFR 1.181 (no fee) requesting withdrawal of the holding of abandonment in the above-identified application.

The petition is **GRANTED**.

This application was held abandoned for failure to reply to the Office action mailed November 6, 2008, which set a one (1) month period for reply. A Notice of Abandonment was mailed on May 13, 2009.

Petitioner asserts that the Office action dated November 6, 2008, was not received.

A review of the written record indicates no irregularity in the mailing of the Office action, and, in the absence of any irregularity, there is a strong presumption that the Office action was properly mailed to the practitioner at the address of record. This presumption may be overcome by a showing that the Office action was not in fact received. In this regard, the showing required to establish the failure to receive the Office action must consist of the following:

1. a statement from practitioner stating that the Office action was not received by the practitioner;

2. a statement from the practitioner attesting to the fact that a search of the file jacket and docket records indicates that the Office action was not received; and

3. a copy of the docket record where the nonreceived Office action would have been entered had it been received and docketed must be attached to and referenced in the practitioner's statement.

See MPEP § 711.03(c) under subheading "Petition to Withdraw Holding of Abandonment Based on Failure to Receive Office Action," and "Withdrawing the Holding of Abandonment When Office Actions Are Not Received," 1156 Official Gazette 53 (November 16, 1993).

The petition satisfies the above-stated requirements. Accordingly, the application was not abandoned in fact.

In view of the above, the Notice of Abandonment is hereby vacated and the holding of abandonment withdrawn. The above-identified application will be restored to pending status.

This application is being referred to the Technology Center technical support staff of Art Unit 2121 for re-mailing the Office action of November 6, 2008. The period for reply will run from the mailing date of the Office action.

for Thurman K. Page
Petitions Examiner
Office of Petitions

UNITED STATES PATENT AND TRADEMARK OFFICE

Commissioner for Patents
United States Patent and Trademark Office
Washington, D.C. 20231
www.uspto.gov

Paper No. 9

KOPPEL & JACOBS
Suite 215
2151 Alessandro Drive
Ventura, CA 93001

COPY MAILED

OCT 1 1 2002

OFFICE OF PETITIONS

In re Application of Cheiky, et al. Application No. 10/022,450 Filed: December 16, 2001 Attorney Docket No. 968-20-022	: : : : :	DECISION DISMISSING PETITION

This is a decision on the "Petition for Corrected Filing Receipt" filed September 3, 2002, requesting that the above-identified application be accorded a filing date of December 14, 2001, rather than the presently accorded filing date of December 17, 2001. This petition is properly treated under 37 CFR § 1.10(d).

Petitioner maintains that the above-identified nonprovisional application was deposited in the United States Postal Service (USPS) Express Mail Service on December 14, 2001, in accordance with 37 C.F.R. § 1.10, and thus, is entitled to a filing date of December 14, 2001. In support of the petition, petitioner submits:

- a copy of the application transmittal bearing the "Express Mail" mailing label number, EL307478544US;
- a copy of "Express Mail" mailing label EL307478544US, showing a "date-in" of December 16, 2001;
- copies of the "Express Mail" mailing labels for two related applications showing a "date-in" of December 14, 2001;
- copies of the three letters reporting the filing of the three related applications purportedly mailed to the assignee on December 14, 2001; and
- the declaration of patent attorney Marvin Jacobs.

Paragraph (a) of 37 C.F.R. § 1.10 states that:

> Any correspondence received by the Patent and Trademark Office (Office) that was delivered by the "Express Mail Post Office to Addressee" service of the United States Postal Service (USPS) will be considered filed in the Office on the date of deposit with the USPS. <u>The date of deposit with the USPS is shown by the "date-in" on the "Express Mail" mailing label or other official USPS notation</u>. If the USPS deposit date cannot be determined, the correspondence will be accorded the Office receipt date as the filing date. See §1.6(a) (Emphasis supplied).

Paragraph §1.10(d) provides that:

> Any person filing correspondence under this section that was received by the Office and delivered by the "Express Mail Post Office to Addressee" service of the USPS, who can show that the "date-in" on the "Express Mail" mailing label or other official notation entered by the USPS was incorrectly entered or omitted by the USPS, may petition the Commissioner to accord the correspondence a filing date as of the date the correspondence is shown to have been deposited with the USPS, provided that:
>
> > (1) The petition is filed promptly after the person becomes aware that the Office has accorded, or will accord, a filing date based upon an incorrect entry by the USPS;
> >
> > (2) The number of the "Express Mail" mailing label was placed on the paper(s) or fee(s) that constitute the correspondence prior to the original mailing by "Express Mail"; and
> >
> > (3) The petition includes a showing which establishes, to the satisfaction of the Commissioner, that the requested filing date was the date the correspondence was deposited in the "Express Mail Post Office to Addressee" service prior to the last scheduled pickup for that day. Any showing pursuant to this paragraph must be corroborated by evidence from the USPS or that came into being after deposit and within one business day of the deposit of the correspondence in the "Express Mail Post Office to Addressee" service of the USPS.

Petitioner has not made a showing that the instant petition was filed promptly within the meaning of § 1.10(d)(1). Furthermore, petitioner's evidence has been considered and is not found persuasive that the requested filing date of December 14, 2001 is the date the correspondence was deposited in the "Express Mail Post Office to Addressee" service prior to the last scheduled pickup for that day. The application transmittal submitted on petition is a true copy of the transmittal of record. Both bear the relevant "Express Mail" mailing label number, EL307478544US, and thus, show that this number was placed on the correspondence prior to the original mailing, satisfying § 1.10(d)(2).

However, a review of the "Express Mail" mailing label reveals that it shows a "date-in" of December 16, 2001, not December 14, 2001. Likewise, the USPTO's USPS Express Mail Information Database shows that the package mailed under this "Express Mail" number was accepted by the USPS at 5:00 pm on December 16, 2001 (copy enclosed). Petitioner has not submitted evidence that corroborates their claim of deposit of December 14, 2001. Petitioner's showing that other related applications purportedly deposited the same day were given a "date-in" of December 14, 2001, is not persuasive that the USPS erred in entering the "date-in" on the "Express Mail" mailing label for the instant application. Petitioner has not submitted evidence from the USPS acknowledging an error in entering the "date-in." The best evidence that the three applications were deposited in a "Express Mail" drop box on December 14, 2001 is a properly prepared log. Petitioner has not submitted an excerpt from a log book prepared within one business day after the deposit showing the "Express Mail" number; the application number, attorney docket number or other such file identification number; the place, date and time of deposit; the time of the last scheduled pick-up for that date and place of deposit; the depositor's initials or signature; and

the date and time of entry in the log. The letters to the assignee dated December 14, 2001, stating that the application had been mailed today do not contain the specificity of information that warrants a log to be considered corroborative of a claim of date of deposit[1]. As the letters do not contain such information as the date, time and place of deposit, such letters can be written with the intention that such an action have occurred, but without actual corroboration that such action had occurred. Considering all of the evidence, it is concluded that petitioner has not made the showing required pursuant to § 1.10(d)(3) to accord the application a filing date of December 14, 2001.

The evidence shows at most that the application was deposited in "Express Mail" as of December 16, 2001, and thus, is entitled to at least an earlier filing date of December 16, 2001.

The petition is **dismissed** without prejudice to reconsideration upon a timely showing that the petition was filed promptly within the meaning of § 1.10(d)(1) and a timely submission of corroborating evidence within the meaning of § 1.10(d)(3). A two (2) month nonextendable period is set for reply. See §1.181(f).

The application is being forwarded to the Office of Initial Patent Examination **for correction of the filing date to December 16, 2001**.

Telephone inquiries regarding this matter should be directed to the undersigned at (703) 305-0309.

Nancy Johnson

Nancy Johnson
Petitions Attorney
Office of Petitions
Office of the Deputy Commissioner
for Patent Examination Policy

---

[1] Such corroborating must be shown to have come into being after deposit and within one day after the deposit of the correspondence as "Express Mail." Additionally, when such correspondence is in the form of an excerpt from a log book, the log book should contain information such as the "Express Mail" number; the application number, attorney docket number or other such file identification number; the place, date and time of deposit; the time of the last scheduled pick-up for that date and place of deposit; the depositor's initials or signature; and the date and time of entry in the log.

UNITED STATES PATENT AND TRADEMARK OFFICE

Commissioner for Patents
United States Patent and Trademark Office
Washington, D.C. 20231
www.uspto.gov

Paper No. 10

KOPPEL & JACOBS
Suite 215
2151 Alessandro Drive
Ventura, CA 93001

COPY MAILED

FEB 13 2003

OFFICE OF PETITIONS

In re Application of
Cheiky, et al.
Application No. 10/022,450
Filed: December 16, 2001
Attorney Docket No. 968-20-022

DECISION DISMISSING PETITION

This is a decision on the "Renewed Petition for Corrected Filing Receipt" filed October 25, 2002, requesting that the above-identified application be accorded a filing date of December 14, 2001, rather than the presently accorded filing date of December 16, 2001[1]. This petition is properly treated under 37 CFR § 1.10(d).

Petitioner maintains that the above-identified nonprovisional application was deposited in the United States Postal Service (USPS) Express Mail Service on December 14, 2001, in accordance with 37 C.F.R. § 1.10, and thus, is entitled to a filing date of December 14, 2001. On initial petition, petitioner submitted the following evidence: a copy of the application transmittal bearing the "Express Mail" mailing label number, EL307478544US; a copy of "Express Mail" mailing label EL307478544US, showing a "date-in" of December 16, 2001; copies of the "Express Mail" mailing labels for two related applications showing a "date-in" of December 14, 2001; copies of the three letters reporting the filing of the three related applications purportedly mailed to the assignee on December 14, 2001; and the declaration of facts of patent attorney Marvin Jacobs.

The evidence was considered, but not found persuasive to show that the requested filing date of December 14, 2001 was the date the correspondence was deposited in the "Express Mail Post Office to Addressee" service prior to the last scheduled pickup for that day[2]. Both the "date-in" on the "Express Mail" mailing label and

---

[1] On initial decision on petition mailed October 11, 2002, the application was accorded a filing date of December 16, 2001, rather than December 17, 2001.

[2] Paragraph (a) of 37 C.F.R. § 1.10 states that:

Any correspondence received by the Patent and Trademark Office (Office) that was delivered by the "Express Mail Post Office to Addressee" service of the United States Postal Service (USPS) will be considered filed in the Office on the date of deposit with the USPS. <u>The date of deposit with the USPS is shown by the "date-in" on the "Express Mail" mailing label or other official USPS notation</u>. If the USPS deposit date cannot be determined, the correspondence will be accorded the Office receipt date as the filing date. See §1.6(a) (Emphasis supplied).

the "USPTO's USPS Express Mail Information Database showed that the package mailed under this "Express Mail" number was accepted by the USPS on December 16, 2001, not December 14, 2001. Petitioner's other evidence was not found to be corroborating of their claim of deposit on December 14, 2001 within the meaning of § 1.10(d)(3). Petitioner also did not make a showing that the instant petition was filed promptly within the meaning of § 1.10(d)(1).

On instant request for reconsideration, petitioner has shown diligence in promptly filing this petition.

However, petitioner still has not shown to the satisfaction of the Commissioner, that the requested filing date of December 14, 2001 was the date the correspondence was deposited in the "Express Mail Post Office to Addressee" service prior to the last scheduled pickup for that day. 37 CFR § 1.10(d)(3) sets forth the corroborating evidence required. Petitioner has not provided the evidence required by the rule.

In support of their assertion that the application was deposited in "Express Mail" service on December 14, 2001, petitioner again submitted a declaration of Marvin E. Jacobs, stating that he deposited this application at the same time, on the same day as two other applications accorded a filing date of December 14, 2001. Further, he declares that he did not work on December 15, 2001 or December 16, 2001. In addition, a declaration of Linda Arnold was submitted. Ms. Arnold declares that the checks written in the instant application had consecutive numbers and were earlier in number than the checks written for the filing fees in the two-related applications. Further, all the checks for the three applications were written on December 14, 2001 and were posted to the client's accounts (by the instant law firm) on December 14, 2001. Petitioner also submitted copies of the patent mailing log maintained in the office of Marvin E. Jacobs, showing an entry

---

Paragraph §1.10(d) provides that:

> Any person filing correspondence under this section that was received by the Office and delivered by the "Express Mail Post Office to Addressee" service of the USPS, who can show that the "date-in" on the "Express Mail" mailing label or other official notation entered by the USPS was incorrectly entered or omitted by the USPS, may petition the Commissioner to accord the correspondence a filing date as of the date the correspondence is shown to have been deposited with the USPS, provided that:
>
> > (1) The petition is filed promptly after the person becomes aware that the Office has accorded, or will accord, a filing date based upon an incorrect entry by the USPS;
> >
> > (2) The number of the "Express Mail" mailing label was placed on the paper(s) or fee(s) that constitute the correspondence prior to the original mailing by "Express Mail"; and
> >
> > (3) The petition includes a showing which establishes, to the satisfaction of the Commissioner, that the requested filing date was the date the correspondence was deposited in the "Express Mail Post Office to Addressee" service prior to the last scheduled pickup for that day. Any showing pursuant to this paragraph must be corroborated by evidence from the USPS or that came into being after deposit and within one business day of the deposit of the correspondence in the "Express Mail Post Office to Addressee" service of the USPS.

for mailing referencing docket No. 968-20-022; a letter dated January 22, 2002 to the assignee, noting an error in the filing date for this application; and a letter sent to practitioners by then Commissioner for Patents Nicholas Godici.

Considering all of the evidence, it is concluded that petitioner still has not made the showing required pursuant to § 1.10(d)(3) to accord the application a filing date of December 14, 2001. Petitioner has not submitted the type of corroborating evidence, outlined in 37 CFR § 1.10(d)(3). Neither the according of a filing date of December 14, 2001 in the other applications, or the numbering of or date of posting of checks internally in the law firm's Office shows that this application was deposited in the "Express Mail" service on December 14, 2001. Likewise, Mr. Jacobs statement that he deposited the papers and he worked on the 14th but not on the 15th or 16th is insufficient to make the required showing in light of the "date-in" on the "Express Mail" mailing label and the "USPTO's USPS Express Mail Information Database showing that the package mailed under this "Express Mail" number was accepted by the USPS on December 16, 2001, not December 14, 2001.

Postal employees are presumed to discharge their duties in a proper manner. Charlson Realty Co. v. United States, 690 F.2d 434, 442 (Ct. Cl. 1967). Therefore, it is petitioner's burden to establish their contention that the December 16, 2001 "Date-In," rather than a December 14, 2001 "Date-In," on the "Express Mail" label and in the "Express Mail" database is the result of an error on the part of an employee of the U.S. Postal Service. Petitioner has provided no evidence from the USPS acknowledging an error in entering the "date-in" or date of acceptance, or otherwise, in processing this "Express Mail" package. Petitioner states that December 16, 2001 was a Sunday, and thus, "How can the Express Mail label be correctly dated December 16, 2001 if there was no pick up on that day?" This argument would be persuasive if supported by an official and specific corroborating statement from the USPS. (i.e., acknowledging that this package was accepted at the 2100 Alessandro Drive location and that no packages are accepted on Sundays at that location and thus, the date must be December 14, 2001, rather than December 15, 2001). Otherwise, it is conjecture.

Further, the log submitted by petitioner is not of the type found corroborative within the meaning of § 1.10(d)(3). It is unclear whether the log came into being after deposit and within one day after the deposit of the correspondence as "Express Mail." The log does not include the date and time of the log entries. In addition, although the log contains the application docket number, it does not contain information such as the "Express Mail" number; the place, date and time of deposit; the time of the last scheduled pick-up for that date and place of deposit; and the depositor's initials or signature. This log is not a log corroborating deposits of correspondence into the USPS Express Mail service.

The letter to practitioners from then Commissioner for Patents Godici generally discusses delays in receiving mail at the USPTO (i.e., the volume of backlogged). This letter does not cite errors by the USPS in entering "date-ins." In fact, by separate notice, then Commissioner Godici reassured applicants that mail properly deposited with the USPS under the provisions of § 1.10, no matter how delayed in being received in the Office would be accorded the date of deposit as the date of filing and thus, the date of filing of such a paper would not be impacted by the mail delay. See *Processing of, and Requirements for, the Filing of Duplicate Applications and Papers in Patent Applications in view of USPS Mail Delays*, 1254 OG 92 (January 15, 2002)("In addition,

correspondence will be treated as filed (37 CFR 1.10) or timely (37 CFR 1.8), if applicant originally filed under those provisions regardless of the length of time that the correspondence took to reach the Office.”). Given such notices and petitioner’s acknowledged awareness of mail delays, at this time, petitioner should have been more diligent in complying with the provisions of § 1.10 where the date of deposit was critical.

In this regard, petitioner’s attention is directed to 37 CFR 1.10(b), which states, in part, that:

> Correspondence should be deposited directly with an employee of the USPS to ensure that the person depositing the correspondence receives a legible copy of the "Express Mail" mailing label with the "date-in" clearly marked. Persons dealing indirectly with the employees of the USPS (such as by deposit in an "Express Mail" drop box) do so at the risk of not receiving a copy of the "Express Mail" mailing label with the desired "date-in" clearly marked.

It is unfortunate that applicants chose to deposit a paper as important as a patent application in “Express Mail” without immediately obtaining an Express Mail receipt showing the desired date of deposit.

The petition is **dismissed**. A two (2) month nonextendable period is set for reply. See §1.181(f).

The application with a filing date of December 16, 2001, is being forwarded to Technology Center 2838 for examination in due course.

Telephone inquiries regarding this matter should be directed to the undersigned at (703) 305-0309.

Nancy Johnson

Nancy Johnson
Petitions Attorney
Office of Petitions

UNITED STATES PATENT AND TRADEMARK OFFICE

Commissioner for Patents
United States Patent and Trademark Office
P.O. Box 1450
Alexandria, VA 22313-1450
www.uspto.gov

OCT - 6 2005

KIRKPATRICK & LOCKHART NICHOLSON GRAHAM LLP
(FORMERLY KIRKPATRICK & LOCKHART LLP)
75 STATE STREET
BOSTON MA 02109-1808

In re Application of	:
Miquel Sale Amill et al	:
Serial No.: 10/022,481	: PETITION DECISION
Filed: December 18, 2001	:
Attorney Docket No.: INL-048	:

This is in response to the petition under 37 CFR 1.181, filed July 19, 2005, requesting withdrawal of the Final rejection.

BACKGROUND

A review of the file history shows that the examiner mailed a non-Final Office action to applicants on November 5, 2003, setting a three month shortened statutory period for reply. Applicants filed an improper reply on May 17, 2004 (Certificate of Mailing dated February 5, 2004), including a three month extension of time and fee, and a complete proper reply on August 4, 2004.

The examiner mailed a new Office action to applicants on December 15, 2004, setting a three month shortened statutory period for reply. The summary sheet of the Office action indicates the Office action is a non-Final Office action. The penultimate page of the Office action states that the Office action is FINAL. Applicants replied on April 15, 2005, including a one month extension of time and fee therefore. The submission was added to the Image File Wrapper, but for some reason not all of the papers were properly entered into the PALM system at that time (they have since been entered).

In view of the supposed finality of the Office action the examiner mailed an Advisory action to applicants on July 13, 2005.

DISCUSSION

The mailing of an Office action containing contradictory indications of status (Final versus non-Final) is improper. As a consequence, the Office action must be considered a non-Final Office action. The response to the Office action must be entered and considered fully. The mailing of an Advisory action is not sufficient. A full Office action on the merits must be fashioned.

The petition is **GRANTED.** The Office action mailed December 15, 2004, is designated a non-Final Office action. The reply received April 15, 2005, is considered timely and is entered. The Advisory action mailed July 15, 2005, is withdrawn.

The application will be forwarded to the examiner for further consideration.

Should there be any questions about this decision please contact William R. Dixon, Jr., by letter addressed to Director, TC 1600, at the address listed above, or by telephone at 571-272-0519 or by facsimile sent to the general Office facsimile number 571-273-8300.

George C. Elliott

George C. Elliott
Director, Technology Center 1600

UNITED STATES
PATENT AND
TRADEMARK OFFICE

UNDER SECRETARY OF COMMERCE FOR INTELLECTUAL PROPERTY
AND DIRECTOR OF THE UNITED STATES PATENT AND TRADEMARK OFFICE
WASHINGTON, D.C. 20231
WWW.USPTO.GOV

JAN 28 2003

#8

REED SMITH LLP
2500 ONE LIBERTY PLACE
1650 MARKET STREET
PHILADELPHIA PA 19103-7301

In re Application of	:
Jonah Shacknai et al	:
Serial No.: 10/022,482	: PETITION TO MAKE SPECIAL
Filed: December 18, 2001	:
Attorney Docket No.: 00-40175-US-P2	:

This is in response to applicants' petition filed January 7, 2003, to make the above-identified application special under the provisions of 37 CFR 1.102(c), based on the age of the applicant.

Applicant has satisfied the provisions set forth in M.P.E.P. 708.02, IV. Therefor the petition is **GRANTED**.

the application will be forwarded to the examiner for consideration of applicants' reply of December 3, 2002, to the Office action mailed November 25, 2002.

Should there be any questions with regard to this letter please contact William R. Dixon, Jr. by letter addressed to the Director, Technology Center 1600, Washington, DC 20231, or by telephone at (703) 308-3824 or by facsimile transmission at (703) 305-3599.

William R. Dixon, Jr.
Special Program Examiner
Technology Center 1600

UNITED STATES PATENT AND TRADEMARK OFFICE

Commissioner for Patents
United States Patent and Trademark Office
P.O. Box 1450
Alexandria, VA 22313-1450
www.uspto.gov

FITZPATRICK CELLA HARPER & SCINTO
30 ROCKEFELLER PLAZA
NEW YORK NY 10112

COPY MAILED

JUL 1 5 2004

OFFICE OF PETITIONS

ON PETITION

In re Application of :
Hironori Takano et al :
Application No. 10/022,504 :
Filed: December 20, 2001 :
Attorney Docket No. 2975.0013 :

This is a decision on the petition, filed July 14, 2004, under 37 CFR 1.313(c)(2) to withdraw the above-identified application from issue after payment of the issue fee.

The petition is **GRANTED**.

The above-identified application is withdrawn from issue for consideration of a submission under 37 CFR 1.114 (request for continued examination). See 37 CFR 1.313(c)(2).

Petitioner is advised that the issue fee paid on July 8, 2004 in the above-identified application cannot be refunded. If, however, the above-identified application is again allowed, petitioner may request that it be applied towards the issue fee required by the new Notice of Allowance.[1]

Telephone inquiries should be directed to the undersigned at (703) 305-8859.

The examiner of Technology Center AU 2872 will consider the request for continued examination under 37 CFR 1.114.

Karen Creasy

Karen Creasy
Petitions Examiner
Office of Petitions
Office of the Deputy Commissioner
for Patent Examination Policy

---

[1] The request to apply the issue fee to the new Notice may be satisfied by completing and returning the new Issue Fee Transmittal Form PTOL-85(b), which includes the following language thereon: "Commissioner for Patents is requested to apply the Issue Fee and Publication Fee (if any) or re-apply any previously paid issue fee to the application identified above." Petitioner is advised that, whether a fee is indicated as being due or not, the Issue Fee Transmittal Form **must** be completed and timely submitted to avoid abandonment. Note the language in bold text on the first page of the Notice of Allowance and Fee(s) Due (PTOL-85).

UNITED STATES PATENT AND TRADEMARK OFFICE

COMMISSIONER FOR PATENTS
UNITED STATES PATENT AND TRADEMARK OFFICE
P.O. BOX 1450
ALEXANDRIA, VA 22313-1450
www.uspto.gov

MAIL

APR 2 8 2005

DIRECTOR OFFICE
TECHNOLOGY CENTER 2600

PILLSBURY WINTHROP SHAW PITTMAN, LLP
P.O. BOX 10500
MCLEAN, VA 22102

In re Application of)
VOHRA)
Application No. 10/022,516)
Filed: December 20, 2001)
For: **DYNAMICALLY RECONFIGURABLE ADD/DROP MULTIPLEXER WITH LOW COHERENT CROSS-TALK FOR OPTICAL COMMUNICATION NETWORKS**)

DECISION ON REQUEST TO WITHDRAW FROM RECORD

This is a decision on the Request for Withdrawal as attorney or agent and change of address filed on December 3, 2004.

A grantable request to withdraw, as attorney/agent of record must:
(1) Indicate the present mailing address of the attorney(s)/agent(s) who seek(s) to withdraw, and
(2) Be signed by each attorney/agent seeking to withdraw or clearly be signed on their behalf, and
(3) Be *approved* at least thirty (30) days prior to the maximum extendable period for response to any outstanding Office Action, and
(4) Indicate the address to which future correspondence should be mailed.

A Revocation and Power of Attorney was filed December 1, 2004. Accordingly the request is DISMISSED.

All future communications from the Office will continue to be directed to the address listed below until otherwise notified by applicant. Applicant is reminded of the obligation to promptly notify the Patent and Trademark Office of any change in correspondence address to ensure receipt of all communications from the Office.

Ken Wieder
Special Program Examiner
Technology Center 2600
Communications
(571) 272-2986

CC:

OBLON, SPIVAK, MCCLELLAND, MAIER & NEUSTADT, P.C.
1940 DUKE STREET
ALEXANDRIA VA 22314

UNITED STATES PATENT AND TRADEMARK OFFICE

Commissioner for Patents
United States Patent and Trademark Office
P.O. Box 1450
Alexandria, VA 22313-1450
www.uspto.gov

COPY MAILED
SEP 15 2006
OFFICE OF PETITIONS

BIRCH STEWART KOLASCH & BIRCH
PO BOX 747
FALLS CHURCH VA 22040-0747

In re Application of	:	
Henn, et al.	:	
Application No. 10/022,526	:	DECISION ON PETITION
Filed: December 20, 2001	:	TO WITHDRAW
Attorney Docket No. 4441-0105P	:	FROM RECORD
	:	

This is a decision on the Request to Withdraw as attorney or agent of record under 37 C.F.R. § 1.36(b), filed May 24, 2006.

The request is **APPROVED**.

A grantable request to withdraw as attorney/agent of record must be signed by every attorney/agent seeking to withdraw or contain a clear indication that one attorney is signing on behalf of another/others. A request to withdraw will not be approved unless at least 30 (thirty) days would remain between the date of approval and the later of the expiration date of a time to file a response or the expiration date of the maximum time period which can be extended under 37 C.F.R. § 1.136(a).

The request was signed by Terrell C. Birch on behalf of all attorneys of record who are associated with customer No. 02292.

All attorneys/agents associated with the Customer Number 02292 have been withdrawn.

Applicant is reminded that there is no attorney of record at this time.

All future correspondence will be directed to the first named inventor Fredrik Henn at the address indicated below.

The request to change the correspondence of record is not acceptable as the requested correspondence address is not that of: (1) the first named signing inventor; or (2) an intervening assignee of the entire interest under 37 C.F.R 3.71. All future communications from the Office will be directed to the first named signing inventor at the first copied address below until otherwise properly notified by the applicant.

Telephone inquiries concerning this decision should be directed to April Wise at 571-272-1642.

April M. Wise
Petitions Examiner
Office of Petitions

cc: Fredrik Henn
Ritarvagen 14, S-168 31
Bromma, Sweden

cc: GLENN PATENT GROUP
3475 EDISON WAY
SUITE L
MENLO PARK, CA 94025

UNITED STATES PATENT AND TRADEMARK OFFICE

TM DAC

OIPE IAP96
NOV 1 3 2006
PATENT & TRADEMARK OFFICE

Commissioner for Patents
United States Patent and Trademark Office
P.O. Box 1450
Alexandria, VA 22313-1450
www.uspto.gov

BIRCH STEWART KOLASCH & BIRCH
PO BOX 747
FALLS CHURCH VA 22040-0747

COPY MAILED
SEP 1 5 2006
OFFICE OF PETITIONS

In re Application of	:	
Henn, et al.	:	
Application No. 10/022,526	:	DECISION ON PETITION
Filed: December 20, 2001	:	TO WITHDRAW
Attorney Docket No. 4441-0105P	:	FROM RECORD
	:	

This is a decision on the Request to Withdraw as attorney or agent of record under 37 C.F.R. § 1.36(b), filed May 24, 2006.

The request is **APPROVED**.

A grantable request to withdraw as attorney/agent of record must be signed by every attorney/agent seeking to withdraw or contain a clear indication that one attorney is signing on behalf of another/others. A request to withdraw will not be approved unless at least 30 (thirty) days would remain between the date of approval and the later of the expiration date of a time to file a response or the expiration date of the maximum time period which can be extended under 37 C.F.R. § 1.136(a).

The request was signed by Terrell C. Birch on behalf of all attorneys of record who are associated with customer No. 02292.

All attorneys/agents associated with the Customer Number 02292 have been withdrawn.

Applicant is reminded that there is no attorney of record at this time.

All future correspondence will be directed to the first named inventor Fredrik Henn at the address indicated below.

The request to change the correspondence of record is not acceptable as the requested correspondence address is not that of: (1) the first named signing inventor; or (2) an intervening assignee of the entire interest under 37 C.F.R 3.71. All future communications from the Office will be directed to the first named signing inventor at the first copied address below until otherwise properly notified by the applicant.

Telephone inquiries concerning this decision should be directed to April Wise at 571-272-1642.

April M. Wise
Petitions Examiner
Office of Petitions

cc: Fredrik Henn
Ritarvagen 14, S-168 31
Bromma, Sweden

cc: GLENN PATENT GROUP
3475 EDISON WAY
SUITE L
MENLO PARK, CA 94025

UNITED STATES PATENT AND TRADEMARK OFFICE

UNITED STATES DEPARTMENT OF COMMERCE
United States Patent and Trademark Office
Address: COMMISSIONER FOR PATENTS
P.O. Box 1450
Alexandria, Virginia 22313-1450
www.uspto.gov

OIPE IAP96
NOV 13 2006
PATENT & TRADEMARK OFFICE

APPLICATION NUMBER	FILING OR 371 (c) DATE	FIRST NAMED APPLICANT	ATTY. DOCKET NO./TITLE
10/022,526	12/20/2001	Fredrik Henn	0226-0113P

CONFIRMATION NO. 2169

OC000000020396049

OC000000020396049

2292
BIRCH STEWART KOLASCH & BIRCH
PO BOX 747
FALLS CHURCH, VA 22040-0747

Date Mailed: 09/12/2006

NOTICE REGARDING CHANGE OF POWER OF ATTORNEY

This is in response to the Power of Attorney filed 05/24/2006.

- The withdrawal as attorney in this application has been accepted. Future correspondence will be mailed to the new address of record. 37 CFR 1.33.

April M Wise

APRIL M WISE
OP (571) 272-1642

FORMER ATTORNEY/AGENT COPY

UNITED STATES PATENT AND TRADEMARK OFFICE

COMMISSIONER FOR PATENTS
UNITED STATES PATENT AND TRADEMARK OFFICE
P.O. BOX 1450
ALEXANDRIA, VA 22313-1450
www.uspto.gov

JAN 12 2004

#11

RAQUEL M. ALVAREZ
MORGAN, LEWIS & BROCKIUS, LLP
1701 MARKET STREET
PHILADELPHIA, PA 19103-2921

In re Application of	:
Thomas Macing et al	:
Serial No.: 10/022,554	: PETITION DECISION
Filed: February 24, 2000	:
Attorney Docket No.: 54474-5005	:

This is in response to the petition under 37 CFR 1.181, filed July 30, 2003, for withdrawal of abandonment of the above identified application based on failure to receive an Office action. The delay in acting on this petition is regretted.

A review of the file history shows that the examiner mailed a first Office action to applicants on November 6, 2002, setting a one month shortened statutory period for reply. Upon failure to receive a reply the examiner mailed a Notice of Abandonment to applicants on July 1, 2003. Applicants state that the Office action was never received and provide statements and copies of docket records establishing that the Office action was never received. In view of the evidence presented the Notice of Abandonment is withdrawn and the application is restored to pending status with the mailing of this decision.

The petition is **GRANTED**.

The application will be forwarded to the examiner for remailing of the Office action.

Should there be any questions about this decision please contact William R. Dixon, Jr., by letter addressed to Director, TC 1600, at the address listed above, or by telephone at 703-308-3824 or by facsimile sent to the general Office facsimile number.

John Doll
Director, Technology Center 1600

UNITED STATES PATENT AND TRADEMARK OFFICE

UNITED STATES DEPARTMENT OF COMMERCE
United States Patent and Trademark Office
Address: COMMISSIONER FOR PATENTS
P.O. Box 1450
Alexandria, Virginia 22313-1450
www.uspto.gov

Schwegman, Lundberg, Woessner & Kluth, P.A.
P.O. Box 2938
Minneapolis, MN 55402

Mail Date: 04/21/2010

Applicant	: Victor B. Lortz	: DECISION ON REQUEST FOR
Patent Number	: 7571314	: RECALCULATION of PATENT
Issue Date	: 08/04/2009	: TERM ADJUSTMENT IN VIEW
Appliction No	: 10/022,592	: OF WYETH AND NOTICE OF INTENT TO
Filed	: 12/13/2001	: ISSUE CERTIFICATE OF CORRECTION
		:

The Request for Recalculation is **GRANTED** to the extent indicated.

The patent term adjustment has been determined to be **1112** days. The USPTO will *sua sponte* issue a certificate of correction reflecting the amount of PTA days determined by the recalculation.

Prior to the issuance of the certificate of correction, the USPTO will afford patentee an opportunity to be heard and request reconsideration. Accordingly, patentee has **one month or thirty (30) days**, whichever is longer, to file a request for reconsideration of this patent term adjustment calculation. See 35 U.S.C. 154(b)(3)(B)(ii) and 37 CFR 1.322(a)(4). No extensions of time will be granted under 37 CFR 1.136.

Patentee should use document code PET.OP if electronically filing a request for reconsideration of this patent term adjustment calculation. The patentee must also include the information required by 37 CFR 1.705(b)(2) and the fee required by 37 CFR 1.18(e). If patentee does not file a timely request for reconsideration of this patent term adjustment calculation including the information required by 37 CFR 1.705(b)(2) and the fee required by 37 CFR 1.18(e), the USPTO will issue a certificate of correction reflecting the PTA determination noted above.

Patentee should be aware that in order to preserve the right to review in the United States District Court for the District of Columbia of the USPTO patent term adjustment determination, patentee must ensure that he or she also take the steps required under 35 U.S.C. 154(b)(4)(A) in a timely manner. Nothing in the request for recalculation should be construed as providing an alternative time frame for commencing a civil action under 35 U.S.C. 154(b)(4)(A).

Any questions concerning this decision should be directed to the Office of Patent Legal Administration at 571-272-7702.

UNITED STATES PATENT AND TRADEMARK OFFICE

Commissioner for Patents
United States Patent and Trademark Office
P.O. Box 1450
Alexandria, VA 22313-1450
www.uspto.gov

MAILED FROM
DIRECTORS OFFICE

JUN - 6 2006

05252006

TECHNOLOGY CENTER 2800

LERNER GREENBERG STEMER LLP
P O BOX 2480
HOLLYWOOD FL 33022-2480

In re Application of	:	
FERSTL et al.	:	DECISION ON PETITION
Application No. 10/022,605	:	
Filed: December 17, 2001	:	
Attorney Docket No. WMP-SME-352	:	

This is a decision on the petition filed May 10, 2004, requesting that the holding of abandonment in the above-identified application be withdrawn.

The petition to withdraw the holding of abandonment is GRANTED.

A non-final Office action was mailed on September 12, 2003, setting a three-month period of response. A Notice of Abandonment was mailed on April 19, 2004.

Petitioner asserts that an Amendment in response to the Office action was timely mailed to the Patent and Trademark Office on March 11, 2004. This is evidenced by 1) a copy of the Amendment, which bears a certificate of mailing under 37 C.F.R. § 1.8(a) dated March 11, 2004, 2) a Petition for Three-Month Extension of Time and the corresponding fee and 3) a postcard receipt indicating receipt of the Amendment in the Patent and Trademark Office on March 15, 2004.

The review of the application file reveals that the Amendment in response to the September 13, 2003 Office action was received and matched with the file. However, the amendment was not noticed by either the examiner or the technical support staff and consequently, the application was held to be abandoned. The application is not abandoned in fact.

The revenue and accounting records indicate that the Three-Month Extension of Time fee was paid on March 17, 2004.

For the above reasons, the Notice of Abandonment is hereby vacated and the holding of abandonment withdrawn. Inconvenience to petitioner is regretted.

The application file is being forwarded to the technical support staff for processing the response to the September 12, 2003 Office action. From there, it will be returned to the examiner for further prosecution.

Questions regarding this decision should be directed to Jose' G. Dees at 571-272-1569.

Robert Oberleitner, Director
Technology Center 2800
Semiconductors, Electrical and Optical
Systems and Components

UNITED STATES PATENT AND TRADEMARK OFFICE

Commissioner for Patents
United States Patent and Trademark Office
P.O. Box 1450
Alexandria, VA 22313-1450
www.uspto.gov

LEE M. DEGROSS
400 PARK PLACE, #1H
FORT LEE NJ 07024

MAILED

FEB 23 2010

OFFICE OF PETITIONS

In re Application of	:	
Lee M. Degross	:	
Application No. 10/022,627	:	DECISION ON PETITION
Filed: December 17, 2001	:	
Attorney Docket No.	:	

This is a decision on the petition under the unintentional provisions of 37 CFR 1.137(b), filed November 30, 2009, to revive the above-identified application.

The petition is **GRANTED**.

The application became abandoned for failure to reply in a timely manner to the non-final Office action mailed, July 14, 2004, which set a shortened statutory period for reply of three (3) months. No extensions of time under the provisions of 37 CFR 1.136(a) were obtained. Accordingly, the application became abandoned on October 15, 2004.

The petition satisfies the requirements of 37 CFR 1.137(b) in that petitioner has supplied (1) the reply in the form of an amendment, (2) the petition fee of $810, and (3) a proper statement of unintentional delay. Accordingly, the reply to the non-final Office Action of July 14, 2004 is accepted as having been unintentionally delayed.

Telephone inquiries concerning this decision should be directed to Tredelle Jackson at (571) 272-2783.

This application is being referred to Technology Center AU 2173 for appropriate action on the concurrently filed amendment.

Ramesh Krishnamurthy
Petitions Examiner
Office of Petitions

UNITED STATES PATENT AND TRADEMARK OFFICE

Commissioner for Patents
United States Patent and Trademark Office
P.O. Box 1450
Alexandria, VA 22313-1450
www.uspto.gov

In re Patent No. 7003669
Issue Date: February 21,2006
Application No. 10022634
Filed: December 17,2001
Attorney Docket No. AT-2

:
:DECISION GRANTING PETITION
:UNDER 37 CFR 1.378(c)
:

This is a decision on the electronic petition, filed May 25,2010 ,under 37 CFR 1.378(c) to accept the unintentionally delayed payment of the 3.5 year maintenance fee for the above-identified patent.

The petition is **GRANTED**.

The maintenance fee is accepted, and the above-identified patent reinstated as of May 25,2010 .
This decision also constitutes notice that the fee has been accepted. An electronic copy of the petition and this decision has been created as an entry in the Image File Wrapper. Nevertheless, petitioner should print and retain an independent copy.

Telephone inquiries related to this electronic decision should be directed to the Electronic Business Center at 1-866-217-9197.

PTO/SB/66 (03-09)
Approved for use through 03/31/2012. OMB 0651-0016
U.S. Patent and Trademark Office: U.S. DEPARTMENT OF COMMERCE
Under the Paperwork Reduction Act of 1995, no persons are required to respond to a collection of information unless it displays valid OMB control number.

PETITION TO ACCEPT UNINTENTIONALLY DELAYED PAYMENT OF MAINTENANCE FEE IN AN EXPIRED PATENT (37 CFR 1.378(c))

Patent Number	Issue Date (YYYY-MM-DD)	Application Number	Filing Date (YYYY-MM-DD)	Docket Number (if applicable)
7003669	2006-02-21	10022634	2001-12-17	ATS2

CAUTION: Maintenance fee (and surcharge, if any) payment must correctly identify: (1) the patent number and (2) the application number of the actual U.S. application leading to issuance of that patent to ensure the fee(s) is/are associated with the correct patent. 37 CFR 1.366(c) and (d).

SMALL ENTITY
☒ Patentee claims, or has previously claimed, small entity status. See 37 CFR 1.27.

LOSS OF ENTITLEMENT TO SMALL ENTITY STATUS
☐ Patentee is no longer entitled to small entity status. See 37 CFR 1.27(g)

NOT Small Entity			Small Entity		
	Fee	Code		Fee	Code
○	3 ½ year	(1551)	◉	3 ½ year	(2551)
○	7 ½ year	(1552)	○	7 ½ year	(2552)
○	11 ½ year	(1553)	○	11 ½ year	(2553)

SURCHARGE
The surcharge required by 37 CFR 1.20(i)(2) (Fee Code 1558) must be paid as a condition of accepting unintentionally delayed payment of the maintenance fee.

MAINTENANCE FEE (37 CFR 1.20(e)-(g))
The appropriate maintenance fee must be submitted with this petition.

STATEMENT
THE UNDERSIGNED CERTIFIES THAT THE DELAY IN PAYMENT OF THE MAINTENANCE FEE TO THIS PATENT WAS UNINTENTIONAL

PETITIONER(S) REQUEST THAT THE DELAYED PAYMENT OF THE MAINTENANCE FEE BE ACCEPTED AND THE PATENT REINSTATED

THIS PORTION MUST BE COMPLETED BY THE SIGNATORY OR SIGNATORIES

37 CFR 1.378(d) states: "Any petition under this section must be signed by an attorney or agent registered to practice before the Patent and Trademark Office, or by the patentee, the assignee, or other party in interest."

I certify, in accordance with 37 CFR 1.4(d)(4) that I am

◉ An attorney or agent registered to practice before the Patent and Trademark Office

○ A sole patentee

○ A joint patentee; I certify that I am authorized to sign this submission on behalf of all the other patentees.

○ A joint patentee; all of whom are signing this e-petition

○ The assignee of record of the entire interest

Patent Practitioner			
A signature of the applicant or representative is required in accordance with 37 CFR 1.33 and 10.18. Please see 37 CFR 1.4(d) for the form of the signature			
Signature	/Joseph E. Funk/	Date (YYYY-MM-DD)	2010-05-25
Name	Joseph E. Funk	Registration Number	25974

This collection of information is required by 37 CFR 1.378(c). The information is required to obtain or retain a benefit by the public which is to file (and by the USPTO to process) an application. Confidentiality is governed by 35 U.S.C. 122 and 37 CFR 1.11 and 1.14. This collection is estimated to take 1 hour to complete, including gathering, preparing, and submitting the completed application form to the USPTO. Time will vary depending upon the individual case. Any comments on the amount of time you require to complete this form and/ or suggestions for reducing this burden, should be sent to the Chief Information Officer, U.S. Patent and Trademark Office, U.S. Department of Commerce, P.O. Box 1450, Alexandria, VA 22313-1450. DO NOT SEND FEES OR COMPLETED FORMS TO THIS ADDRESS. **This form can only be used when in conjunction with EFS-Web. If this form is mailed to the USPTO, it may cause delays in reinstating the patent.**

Privacy Act Statement

The Privacy Act of 1974 (P.L. 93-579) requires that you be given certain information in connection with your submission of the attached form related to a patent application or patent. Accordingly, pursuant to the requirements of the Act, please be advised that: (1) the general authority for the collection of this information is 35 U.S.C. 2(b)(2); (2) furnishing of the information solicited is voluntary; and (3) the principal purpose for which the information is used by the U.S. Patent and Trademark Office is to process and/or examine your submission related to a patent application or patent. If you do not furnish the requested information, the U.S. Patent and Trademark Office may not be able to process and/or examine your submission, which may result in termination of proceedings or abandonment of the application or expiration of the patent.

The information provided by you in this form will be subject to the following routine uses:

1. The information on this form will be treated confidentially to the extent allowed under the Freedom of Information Act (5 U.S.C. 552) and the Privacy Act (5 U.S.C. 552a). Records from this system of records may be disclosed to the Department of Justice to determine whether the Freedom of Information Act requires disclosure of these records.

2. A record from this system of records may be disclosed, as a routine use, in the course of presenting evidence to a court, magistrate, or administrative tribunal, including disclosures to opposing counsel in the course of settlement negotiations.

3. A record in this system of records may be disclosed, as a routine use, to a Member of Congress submitting a request involving an individual, to whom the record pertains, when the individual has requested assistance from the Member with respect to the subject matter of the record.

4. A record in this system of records may be disclosed, as a routine use, to a contractor of the Agency having need for the information in order to perform a contract. Recipients of information shall be required to comply with the requirements of the Privacy Act of 1974, as amended, pursuant to 5 U.S.C. 552a(m).

5. A record related to an International Application filed under the Patent Cooperation Treaty in this system of records may be disclosed, as a routine use, to the International Bureau of the World Intellectual Property Organization, pursuant to the Patent Cooperation Treaty.

6. A record in this system of records may be disclosed, as a routine use, to another federal agency for purposes of National Security review (35 U.S.C. 181) and for review pursuant to the Atomic Energy Act (42 U.S.C. 218(c)).

7. A record from this system of records may be disclosed, as a routine use, to the Administrator, General Services, or his/her designee, during an inspection of records conducted by GSA as part of that agency's responsibility to recommend improvements in records management practices and programs, under authority of 44 U.S.C. 2904 and 2906. Such disclosure shall be made in accordance with the GSA regulations governing inspection of records for this purpose, and any other relevant (i.e., GSA or Commerce) directive. Such disclosure shall not be used to make determinations about individuals.

8. A record from this system of records may be disclosed, as a routine use, to the public after either publication of the application pursuant to 35 U.S.C. 122(b) or issuance of a patent pursuant to 35 U.S.C. 151. Further, a record may be disclosed, subject to the limitations of 37 CFR 1.14, as a routine use, to the public if the record was filed in an application which became abandoned or in which the proceedings were terminated and which application is referenced by either a published application, an application open to public inspections or an issued patent.

9. A record from this system of records may be disclosed, as a routine use, to a Federal, State, or local law enforcement agency, if the USPTO becomes aware of a violation or potential violation of law or regulation.

UNITED STATES PATENT AND TRADEMARK OFFICE

Commissioner for Patents
United States Patent and Trademark Office
P.O. Box 1450
Alexandria, VA 22313-1450
www.uspto.gov

INTERNATIONAL FLAVORS & FRAGRANCES INC.
521 WEST 57TH ST
NEW YORK, NY 10019

COPY MAILED

MAY 0 2 2005

OFFICE OF PETITIONS

ON PETITION

In re Application of	:	
Williams et al.	:	
Application No. 10/022,636	:	
Filed: December 17, 2001	:	
Attorney Docket No. IFF-26	:	

This is a decision on the petition under 37 C.F.R. § 1.137(b), filed April 20, 2005, to revive the above-identified application.

The petition is **GRANTED.**

This application became abandoned for failure to timely reply to the non-final Office action mailed October 8, 2004. No extensions of time under the provisions of 37 CFR 1.136(a) were obtained. Accordingly, this application became abandoned on January 9, 2005. A Notice of Abandonment was mailed April 22, 2005.

Petitioner has met the requirements to revive the above-identified application pursuant to 37 CFR 1.137(b).

This matter is being referred to Technology Center 1700 for further examination on the merits.

Telephone inquiries regarding this decision should be directed to the undersigned at (571) 272-3282.

Liana Chase
Petitions Examiner
Office of Petitions
Office of the Deputy Commissioner
for Patent Examination Policy

UNITED STATES PATENT AND TRADEMARK OFFICE

Commissioner for Patents
United States Patent and Trademark Office
P.O. Box 1450
Alexandria, VA 22313-1450
www.uspto.gov

Paper No. 11

CHIEF PATENT COUNSEL
SMITH & NEPHEW, INC.
1450 BROOKS ROAD
MEMPHIS, TN 38116

COPY MAILED

AUG 0 2 2004

OFFICE OF PETITIONS

In re Application of	:	
A.C. Nicol et al	:	
Application No. 10/022,663	:	DECISION GRANTING PETITION
Filed: December 17, 2001	:	UNDER 37 CFR 1.137(b)
Attorney Docket No. 10557/263318	:	

This is a decision on the petition under 37 CFR 1.137(b), filed June 23, 2004, to revive the above-identified application.

The petition is **GRANTED**.

The above-identified application became abandoned for failure to reply in a timely manner to the nonfinal Office action mailed October 9, 2003, which set a shortened statutory period for reply of three (3) months. No extensions of time under the provisions of 37 CFR 1.136(a) were obtained. Accordingly, the above-identified application became abandoned on January 10, 2004. A Notice of Abandonment was mailed on May 14, 2004.

The petition satisfies the conditions for revival pursuant to the provisions of 37 CFR 1.137(b) in that (1) the reply to the nonfinal Office action of October 9, 2003; (2) the petition fee; and (3) the required statement of unintentional delay have been received. Accordingly, the reply is accepted as having been unintentionally delayed.

Telephone inquiries concerning this decision should be directed to the undersigned at (703) 305-8680.

The application file is being forwarded to Technology Center AU 3732 for appropriate action on the reply received June 23, 2004.

Frances Hicks

Frances Hicks
Petitions Examiner
Office of Petitions
Office of the Deputy Commissioner
for Patent Examination Policy

UNITED STATES PATENT AND TRADEMARK OFFICE

Commissioner for Patents
United States Patent and Trademark Office
Washington, D.C. 20231
www.uspto.gov

Paper No. 6

FISH & NEAVE
1251 AVENUE OF THE AMERICAS
50TH FLOOR
NEW YORK, NY 10020-1105

COPY MAILED

APR 1 6 2003

OFFICE OF PETITIONS

In re Application of Philip M. Ginsberg Application No. 10/022,664 Filed: December 17, 2001 Attorney Docket No. CF-29	DECISION GRANTING PETITION UNDER 37 CFR 1.137(f)

This is a decision on the petition, filed April 8, 2003, to revive the instant nonprovisional application under the unintentional provisions of 37 CFR 1.137(f).

The petition is **GRANTED**.

Petitioner states that the instant nonprovisional application is the subject of an application filed in a foreign country on December 6, 2002. However, the U.S. Patent and Trademark Office was unintentionally not notified of this filing within 45 days subsequent to the filing of the subject application in a foreign country.

In view of the above, this application became abandoned pursuant to 35 U.S.C. § 122(b)(2)(B)(iii) and 37 CFR 1.213(c) for failure to timely notify the Office of the filing of an application in a foreign country, or under a multilateral international agreement, that requires publication of applications 18 months after filing.

A petition under 37 CFR 1.137(f) must be accompanied by:

(1) the reply which is met by the notification of such filing in a foreign country or under a multinational treaty;

(2) the petition fee as set forth in 37 CFR 1.17(m); and

(3) a statement that the entire delay in filing the required reply from the due date of the reply until

the filing of a grantable petition was unintentional.

The instant petition has been found in compliance with 37 CFR 1.137(f). However, while the statement of unintentional delay does not comply with the rule, the statement presented will be construed as meaning that "the entire delay in filing the required reply [Notice to Rescind Previous Nonpublication Request Under 35 U.S.C. § 122(b)(2)(B)(ii)] until the filing of a grantable petition was unintentional." Accordingly, the failure to timely notify the Office of a foreign or international filing within 45 days as provided by 35 U.S.C. § 122(b)(2)(B)(iii) is accepted as having been unintentionally delayed.

The previous Request and Certification under 35 U.S.C. § 122(b)(2)(B)(i) has been rescinded. A corrected Filing Receipt which sets forth the projected publication date of July 24, 2003 accompanies this decision on petition.

Any inquiries concerning this decision may be directed to the undersigned at (703) 305-8680.

This application is being forwarded to Technology Center Art Unit 3624 for examination in due course.

Frances Hicks

Frances Hicks
Petitions Examiner
Office of Petitions
Office of the Deputy Commissioner
for Patent Examination Policy

ATTACHMENT: Corrected Filing Receipt

UNITED STATES PATENT AND TRADEMARK OFFICE

Commissioner for Patents
United States Patent and Trademark Office
P.O. Box 1450
Alexandria, VA 22313-1450
www.uspto.gov

FISH & NEAVE IP GROUP
ROPES & GRAY LLP
1251 AVENUE OF THE AMERICAS FL C3
NEW YORK NY 10020-1105

COPY MAILED

JUL 18 2006

OFFICE OF PETITIONS

In re Application of	:	
Ginsberg, Philip M.	:	
Application No. 10/022,664	:	ON PETITION
Filed: December 17, 2001	:	
Attorney Docket No. CF-29	:	

This is a decision on the petition under 37 CFR 1.102(c)(1), filed June 26, 2006, to make the above-identified application special based on applicant's age as set forth in M.P.E.P. § 708.02, Section IV.

The petition is **GRANTED**.

A grantable petition to make an application special under 37 CFR 1.102(c)(1) and MPEP § 708.02, Section IV: Applicant's Age must be accompanied by evidence showing that at least one of the applicants is 65 years of age, or more, such as a birth certificate or a statement by applicant. No fee is required.

The instant petition includes a copy of the applicant's driver's license. Accordingly, the above-identified application has been accorded "special" status.

Telephone inquiries concerning this decision should be directed to the undersigned at 571-272-3206. All other inquiries concerning either the examination or status of the application should be directed to the Technology Center.

This matter is being referred to the Technology Center Art Unit 3624 for action on the merits commensurate with this decision.

Liana Chase
Petitions Examiner
Office of Petitions

UNITED STATES PATENT AND TRADEMARK OFFICE

Commissioner for Patents
United States Patent and Trademark Office
P.O. Box 1450
Alexandria, VA 22313-1450
www.uspto.gov

COPY MAILED

MAY 19 2008

OFFICE OF PETITIONS

ROPES & GRAY LLP
PATENT DOCKETING 39/361
1211 AVENUE OF THE AMERICAS
NEW YORK, NY 10036-8704

In re Application of	:	
GINSBERG, Phillip M.	:	
Application No. 10/022,664	:	DECISION ON PETITION
Filed: December 17, 2001	:	TO WITHDRAW
Attorney Docket No. **01-1029**	:	FROM RECORD
	:	

This is a decision on the Request to Withdraw as attorney or agent of record under 37 C.F.R. § 1.36(b), filed February 19, 2008.

The request is **Moot** because a revocation of power of attorney has been previously filed.

A review of the file record indicates that the power of attorney to ROPES & GRAY LLP has been revoked by the assignee of the patent application on April 24, 2008. Accordingly, the request to withdraw under 37 C.F.R. § 1.36(b) is moot.

All future communications from the Office will continue to be directed to the below-listed address until otherwise notified by applicant.

Telephone inquires concerning this decision should be directed to Tredelle Jackson at 571-272-2783.

Tredelle D. Jackson
Petitions Examiner
Office of Petitions

cc: **DEAN P. ALDERUCCI**
CANTOR FITZGERALD, L.P.
110 EAST 59TH STREET (6TH FLOOR)
NEW YORK NY 10022

UNITED STATES PATENT AND TRADEMARK OFFICE

Commissioner for Patents
United States Patent and Trademark Office
P.O. Box 1450
Alexandria, VA 22313-1450
www.uspto.gov

Paper No. 6

THOMAS H. CLOSE
PATENT LEGAL STAFF
EASTMAN KODAK COMPANY
343 STATE STREET
ROCHESTER, NY 14650-2201

COPY MAILED

MAY 1 0 2004

OFFICE OF PETITIONS

ON PETITION

In re Application of :
Tingey et al. :
Application No. 10/022,687 :
Filed: December 17, 2001 :
Attorney Docket No. 83784/CEB :

This decision concerns the April 16, 2004 petition under 37 CFR 1.137(b).

The petition is **GRANTED.**

The application became abandoned on April 13, 2002 for failure to timely submit a proper reply to the February 12, 2002 "Notice to File Corrected Application Papers" which set forth an extendable 2-month period for reply.

The instant petition encloses a set of substitute drawings which have been approved by the draftsperson, and the $1,330 petition fee; and states in essence that the entire delay in filing the required drawings from the due date until the filing of a grantable §1.137(b) petition was unintentional. The petition is thus granted.

The application is now complete.

The application file is being forwarded to Technology Center 3700 for examination in due course.

Telephone inquiries should be directed to the undersigned at (703) 308-0763.

RC Tang
Petitions Attorney
Office of Petitions

OCT-176

UNITED STATES PATENT AND TRADEMARK OFFICE

COMMISSIONER FOR PATENTS
UNITED STATES PATENT AND TRADEMARK OFFICE
WASHINGTON, D.C. 20231
www.uspto.gov

OIPE JC67
FEB 1 0 2003
TRADEMARK OFFICE

HALEOS, INC
3150 STATE STREET
BLACKSBURG, VA 24060

COPY MAILED
OCT 0 1 2002
OFFICE OF PETITIONS

In re Application of
David W. Sherrer; John Fisher and
Daniel A. Steinberg
Application No. 10/022,726
Filed: December 20, 2001
For: OPTICAL SWITCH ASSEMBLY WITH FLEX PLATE AND METHOD FOR MAKING

: DECISION REFUSING STATUS
: UNDER 37 CFR 1.47(a)

RECEIVED
FEB 1 1 2003
OFFICE OF PETITIONS

This is in response to the "Petition Under 37 CFR 1.47(a)," filed September 4, 2002 (certificate of mailing date: August 28, 2002)

The petition is dismissed.

Rule 47 applicant is given TWO MONTHS from the mailing date of this decision to reply, correcting the below-noted deficiencies. Any reply should be entitled "Request for Reconsideration of Petition Under 37 CFR 1.47(a)," and should only address the deficiencies noted below, except that the reply may include an oath or declaration executed by the non-signing inventor. **FAILURE TO RESPOND WILL RESULT IN ABANDONMENT OF THE APPLICATION.** Any extensions of time will be governed by 37 CFR 1.136(a).

The above-identified application was filed on December 20, 2001 without an executed oath or declaration and naming David W. Sherrer; John Fisher and Daniel A. Steinberg as joint inventors.

Accordingly, on January 28, 2002, a "Notice to File Missing Parts of Application" was mailed, requiring an executed oath or declaration, and a surcharge for its late filing.

In response, on September 4, 2002 (certificate of mailing date: August 28, 2002), the instant petition, request for a five (5) month extension of time, a

copy of an email from joint inventor David Sherrer that indicates the non-signing inventor's refusal to sign the Declaration and surcharge were filed.

A grantable petition under 37 CFR 1.47(a) requires:

> (1) proof that the non-signing inventor cannot be reached or refuses to sign the oath or declaration after having been presented with the application papers (specification, claims and drawings);
>
> (2) an acceptable oath or declaration in compliance with 35 U.S.C. §§ 115 and 116;
>
> (3) the petition fee; and
>
> (4) a statement of the last known address of the non-signing inventor.

Applicant lacks itemS (1), (2) and (4), as set forth above.

As to item (1), applicant appears to demonstrate that Mr. Steinberg was only presented with the declaration. Unless Mr. Steinberg was presented with a copy of the application papers (specification, claims and drawings), Mr. Steinberg could not attest that he has "reviewed and understands the application papers" and therefore could not sign the declaration which he was given. Accordingly, Rule 47 applicant failed to show or provide proof that the inventor has refused to sign the declaration. See Manual of Patent Examining Procedure, Section 409.03(d). Petitioner should show that a copy of the application papers was presented to the inventor, but that he did not respond to, or refused, the request that he sign the oath/declaration in order to show that the inventor has refused to join in the application. The proof of the pertinent events of any refusal should be made by a statement of someone with first hand knowledge of the refusal.

As to item (2), an oath or declaration for the patent application in compliance with 37 CFR 1.63 and 1.64 still has not been presented. The declaration does not set forth:

> - A signature block for non-signing inventor Daniel A. Steinberg that includes the required information for Mr. Steinberg.

An oath or declaration in compliance with 37 CFR 1.63 and 1.64 is REQUIRED. See MPEP 409.03(a).

As to item (4), a statement of the inventor's last known address is missing and is required.

Fees totaling $130.00 for the petition fee have been charged to Applicant's deposit account no. 50-0369.

Further correspondence with respect to this matter should be addressed as follows:

By mail: Assistant Commissioner for Patents
Box DAC
Washington, DC 20231

By FAX: (703) 308-6916
Attn: Office of Petitions

By hand: Office of Petitions
2201 South Clark Place
Crystal Plaza 4, Suite 3C23
Arlington, VA

Telephone inquiries related to this decision should be directed to Petitions Attorney Edward Tannouse at (703) 306-9200.

for

Beverly M. Flanagan
Supervisory Petitions Examiner
Office of Petitions
Office of the Deputy Commissioner
for Patent Examination Policy

UNITED STATES PATENT AND TRADEMARK OFFICE

COMMISSIONER FOR PATENTS
UNITED STATES PATENT AND TRADEMARK OFFICE
WASHINGTON, D.C. 20231
www.uspto.gov

Paper No. 10

MARIA M. ELISEEVA
BROWN RUDNICK BERLACK ISRAELS, LLP
ONE FINANCIAL CENTER
BOSTON, MA 02111

COPY MAILED

FEB 14 2003

OFFICE OF PETITIONS

In re Application of
David W. Sherrer and John Fisher
Application No. 10/022,726
Filed: December 20, 2001
For: OPTICAL SWITCH ASSEMBLY WITH FLEX PLATE AND METHOD FOR MAKING

: DECISION NOTING JOINDER OF
: INVENTOR AND PETITION
: UNDER 37 CFR 1.47(a) MOOT

This is in response to the "Request For Reconsideration of Petition Under 37 CFR 1.47(a)," filed February 10, 2003.

Petitioner has notified the Patent and Trademark Office (Office) that previously non-signing inventor Daniel Steinberg is not an inventor on the above-identified application and has requested that Mr. Steinberg be removed from the list of inventors. A new declaration without Mr. Steinberg was submitted with the instant petition on February 10, 2003. Therefore, in view of the removal of the previously non-signing inventor, further consideration under 37 CFR 1.47(a) is not necessary and the petition is considered moot. This application does not require Rule 1.47(a) status, and no such status should appear on the file wrapper. This application need not be returned to this Office for further consideration under 37 CFR 1.47(a).

The file is being forwarded to the Office of Initial Patent Examination for further processing.

Telephone inquiries regarding this decision should be directed to the undersigned at (703) 306-9200.

Edward J. Tannouse
Petitions Attorney
Office of Petitions
United States Patent and Trademark Office

UNITED STATES PATENT AND TRADEMARK OFFICE

COMMISSIONER FOR PATENTS
UNITED STATES PATENT AND TRADEMARK OFFICE
WASHINGTON, D.C. 20231
www.uspto.gov

HALEOS, INC
3150 STATE STREET
BLACKSBURG, VA 24060

COPY MAILED

OCT 0 1 2002

OFFICE OF PETITIONS

In re Application of :
David W. Sherrer; John Fisher and :
Daniel A. Steinberg : DECISION REFUSING STATUS
Application No. 10/022,726 : UNDER 37 CFR 1.47(a)
Filed: December 20, 2001 :
For: OPTICAL SWITCH ASSEMBLY WITH
FLEX PLATE AND METHOD FOR MAKING

This is in response to the "Petition Under 37 CFR 1.47(a)," filed September 4, 2002 (certificate of mailing date: August 28, 2002)

The petition is dismissed.

Rule 47 applicant is given TWO MONTHS from the mailing date of this decision to reply, correcting the below-noted deficiencies. Any reply should be entitled "Request for Reconsideration of Petition Under 37 CFR 1.47(a)," and should only address the deficiencies noted below, except that the reply may include an oath or declaration executed by the non-signing inventor. **FAILURE TO RESPOND WILL RESULT IN ABANDONMENT OF THE APPLICATION.** Any extensions of time will be governed by 37 CFR 1.136(a).

The above-identified application was filed on December 20, 2001 without an executed oath or declaration and naming David W. Sherrer; John Fisher and Daniel A. Steinberg as joint inventors.

Accordingly, on January 28, 2002, a "Notice to File Missing Parts of Application" was mailed, requiring an executed oath or declaration, and a surcharge for its late filing.

In response, on September 4, 2002 (certificate of mailing date: August 28, 2002), the instant petition, request for a five (5) month extension of time, a

copy of an email from joint inventor David Sherrer that indicates the non-signing inventor's refusal to sign the Declaration and surcharge were filed.

A grantable petition under 37 CFR 1.47(a) requires:

> (1) proof that the non-signing inventor cannot be reached or refuses to sign the oath or declaration after having been presented with the application papers (specification, claims and drawings);
>
> (2) an acceptable oath or declaration in compliance with 35 U.S.C. §§ 115 and 116;
>
> (3) the petition fee; and
>
> (4) a statement of the last known address of the non-signing inventor.

Applicant lacks itemS (1), (2) and (4), as set forth above.

As to item (1), applicant appears to demonstrate that Mr. Steinberg was only presented with the declaration. Unless Mr. Steinberg was presented with a copy of the application papers (specification, claims and drawings), Mr. Steinberg could not attest that he has "reviewed and understands the application papers" and therefore could not sign the declaration which he was given. Accordingly, Rule 47 applicant failed to show or provide proof that the inventor has refused to sign the declaration. See Manual of Patent Examining Procedure, Section 409.03(d). Petitioner should show that a copy of the application papers was presented to the inventor, but that he did not respond to, or refused, the request that he sign the oath/declaration in order to show that the inventor has refused to join in the application. The proof of the pertinent events of any refusal should be made by a statement of someone with first hand knowledge of the refusal.

As to item (2), an oath or declaration for the patent application in compliance with 37 CFR 1.63 and 1.64 still has not been presented. The declaration does not set forth:

> - A signature block for non-signing inventor Daniel A. Steinberg that includes the required information for Mr. Steinberg.

An oath or declaration in compliance with 37 CFR 1.63 and 1.64 is REQUIRED. See MPEP 409.03(a).

As to item (4), a statement of the inventor's last known address is missing and is required.

Fees totaling $130.00 for the petition fee have been charged to Applicant's deposit account no. 50-0369.

Further correspondence with respect to this matter should be addressed as follows:

By mail: Assistant Commissioner for Patents
Box DAC
Washington, DC 20231

By FAX: (703) 308-6916
Attn: Office of Petitions

By hand: Office of Petitions
2201 South Clark Place
Crystal Plaza 4, Suite 3C23
Arlington, VA

Telephone inquiries related to this decision should be directed to Petitions Attorney Edward Tannouse at (703) 306-9200.

for

Beverly M. Flanagan
Supervisory Petitions Examiner
Office of Petitions
Office of the Deputy Commissioner
for Patent Examination Policy

UNITED STATES PATENT AND TRADEMARK OFFICE

Commissioner for Patents
United States Patent and Trademark Office
P.O. Box 1450
Alexandria, VA 22313-1450
www.uspto.gov

REED SMITH LLP
3110 FAIRVIEW PARK DRIVE, SUITE 1400
FALLS CHURCH VA 22042

COPY MAILED

JUN 2 0 2007

OFFICE OF PETITIONS

In re Patent No. 7,190,593	:	
Application No. 10/022,732	:	
Filed: December 20, 2001	:	ON PETITION
Issued: March 13, 2007	:	
Attorney Docket No. HITA.0141	:	

This is a decision on the petition filed April 18, 2007, which is being treated as a request under 37 CFR 3.81(b)[1] to add the name of the second assignee on the front page of the above-identified patent by way of a Certificate of Correction.

The request is **GRANTED**.

The patent file is being forwarded to the Certificates of Correction Branch for issuance of the requested Certificate of Correction.

Telephone inquiries concerning this decision may be directed to Petitions Examiner Liana Walsh at (571) 272-3206. Inquiries regarding the issuance of a certificate of correction should be directed to the Certificate of Correction Branch at (571) 272-4200.

Liana Walsh for
Frances Hicks
Petitions Examiner
Office of Petitions

[1] *See* MPEP 1309, subsection II; and Official Gazette of June 22, 2004.

UNITED STATES PATENT AND TRADEMARK OFFICE

Commissioner for Patents
United States Patent and Trademark Office
P.O. Box 1450
Alexandria, VA 22313-1450
www.uspto.gov
DIW Jan-06

TOWNSEND AND TOWNSEND AND CREW, LLP
TWO EMBARCADERO CENTER
EIGHTH FLOOR
SAN FRANCISCO CA 94111-3834

COPY MAILED

JAN 27 2006

OFFICE OF PETITIONS

In re Application of	:	
Master et al.	:	
Application No. 10/022,776	:	DECISION ON PETITION
Filed: 13 December, 2001	:	
Atty Docket No. 021202-001000US	:	

This is a decision on the petition filed on 9 December, 2005, under 37 CFR 1.137(b),[1] to revive the above-identified application.

The petition is **GRANTED**.

The application became abandoned on 13 August, 2004, for failure to timely reply to the non-final Office action mailed on 12 May, 2004, which set a three (3) month shortened statutory period for reply. No extensions of time under 37 CFR 1.136(a) were obtained. Notice of Abandonment was mailed on 27 June, 2005.

Petitioners have filed an amendment to the claims as the required reply.

---

[1] Effective December 1, 1997, the provisions of 37 CFR 1.137(b) now provide that where the delay in reply was unintentional, a petition may be filed to revive an abandoned application or a lapsed patent pursuant to 37 CFR 1.137(b). A grantable petition filed under the provisions of 37 CFR 1.137(b) must be accompanied by:

(1) the required reply, unless previously filed. In a nonprovisional application abandoned for failure to prosecute, the required reply may be met by the filing of a continuing application. In a nonprovisional utility or plant application filed on or after June 8, 1995, and abandoned for failure to prosecute, the required reply may also be met by the filing of a request for continuing examination in compliance with § 1.114. In an application or patent, abandoned or lapsed for failure to pay the issue fee or any portion thereof, the required reply must be the payment of the issue fee or any outstanding balance thereof. In an application, abandoned for failure to pay the publication fee, the required reply must include payment of the publication fee.

(2) the petition fee as set forth in 37 CFR 1.17(m);

(3) a statement that the entire delay in filing the required reply from the due date for the reply until the filing of a grantable petition pursuant to 37 CFR 1.137(b) was unintentional. The Commissioner may required additional information where there is a question whether the delay was unintentional; and

(4) any terminal disclaimer (and fee as set forth in 37 CFR 1.20(d)) required pursuant to 37 CFR 1.137(c)).

The address on the petition is different than the correspondence address. If petitioner desires to receive future correspondence regarding this application, the appropriate power of attorney documentation must be mailed. A courtesy copy of this decision will be mailed to petitioner. However, all future correspondence will be directed to the address of record until such time as appropriate instructions are received to the contrary.

This application is being referred to Technology Center Art Unit 2111 for further processing.

Telephone inquiries concerning this matter may be directed to the undersigned at (571)272-3231.

D Wood

Douglas I. Wood
Senior Petitions Attorney
Office of Petitions

cc: CARPENTER & KULAS, LLP
1900 EMBARCADERO ROAD
SUITE 109
PALO ALTO CA 94303

UNITED STATES PATENT AND TRADEMARK OFFICE

COMMISSIONER FOR PATENTS
UNITED STATES PATENT AND TRADEMARK OFFICE
P.O. BOX 1450
ALEXANDRIA, VA 22313-1450
www.uspto.gov

Attention: Alan Ball
Office of Intellectual Property Counsel
P. O. Box 33427
St. Paul, MN 55133-3427

COPY MAILED

JAN 31 2005

OFFICE OF PETITIONS

In re Application of	:	
William J. Clatanoff, et al.	:	
Application No. 10/022,780	:	ON PETITION
Filed: December 13, 2001	:	
Attorney Docket No. 57381US002	:	

This is a decision on the petition under 37 CFR 1.137(b), filed November 22, 2004, to revive the above-identified application.

The petition is **GRANTED**.

37 CFR 1.137(b)(3) requires a statement that the entire delay in filing the required reply from the due date for the reply until the filing of a grantable petition pursuant to 37 CFR 1.137(b) was unintentional. Since the statement contained in the instant petition varies from the language required by 37 CFR 1.137(b)(3), the statement is being construed as the statement required by 37 CFR 1.137(b)(3) and petitioner must notify the Office if this is **not** a correct interpretation of the statement contained in the instant petition.

Telephone inquiries concerning this decision should be directed to the undersigned at (571) 272-3223.

The application file is being referred to the Publishing Division to be processed into a patent.

Marianne E. Jenkins
Petitions Examiner
Office of Petitions
Office of the Deputy Commissioner
for Patent Examination Policy

UNITED STATES PATENT AND TRADEMARK OFFICE

COMMISSIONER FOR PATENTS
UNITED STATES PATENT AND TRADEMARK OFFICE
WASHINGTON, D.C. 20231
www.uspto.gov

Paper No. 4

FAY SHARPE FAGAN MINNICH & MCKEE
SEVENTH FLOOR
1100 SUPERIOR AVENUE
CLEVELAND, OH 44114-2518

COPY MAILED

MAR - 6 2002

OFFICE OF PETITIONS

In re Application of	:	
John Henry May	:	
Application No. 10/022,784	:	NOTICE
Filed: December 17, 2001	:	
Attorney Docket No. UDL 2 0018	:	

This is a notice regarding your request for acceptance of a fee deficiency submission under 37 CFR 1.28. On September 1, 1998, the Court of Appeals for the Federal Circuit held that 37 CFR 1.28(c) is the sole provision governing the time for correction of the erroneous payment of the issue fee as a small entity. **See DH Technology v. Synergystex International, Inc. 154 F.3d 1333, 47 USPQ2d 1865 (Fed. Cir. Sept. 1, 1998).**

The Office no longer investigates or rejects original or reissue applications under 37 CFR 1.56. **1098 Off. Gaz. Pat. Office 502 (January 3, 1989)**. Therefore, nothing in this Notice is intended to imply that an investigation was done.

Your fee deficiency submission under 37 CFR 1.28 is hereby **ACCEPTED**.

Inquiries related to this communication should be directed to the Office of Petitions Staff at (703) 305-9285.

This file is being forwarded to Initial Patent Examination Division.

Wan Laymon
Petitions Examiner
Office of Petitions
Office of the Deputy Commissioner
for Patent Examination Policy

UNITED STATES PATENT AND TRADEMARK OFFICE

Commissioner for Patents
United States Patent and Trademark Office
P. O. Box 1450
Alexandria, VA 22313-1450
www.uspto.gov

Paper No. 7

AT&T CORP.
P.O. BOX 4110
MIDDLETOWN, NJ 07748

COPY MAILED

MAY 21 2003

OFFICE OF PETITIONS

In re Application of Simon D. Byers Application No. 10/022,788 Filed: December 17, 2001 Attorney Docket No. 2000-0609	DECISION GRANTING PETITION UNDER 37 CFR 1.137(f)

This is a decision on the petition, filed by facsimile transmission on May 13, 2003, to revive the instant nonprovisional application under the unintentional provisions of 37 CFR 1.137(f).

The petition is **GRANTED**.

Petitioner states that the instant nonprovisional application is the subject of an application filed in a foreign country on December 10, 2002. However, the U.S. Patent and Trademark Office was unintentionally not notified of this filing within 45 days subsequent to the filing of the subject application in a foreign country.

In view of the above, this application became abandoned pursuant to 35 U.S.C. § 122(b)(2)(B)(iii) and 37 CFR 1.213(c) for failure to timely notify the Office of the filing of an application in a foreign country, or under a multilateral international agreement, that requires publication of applications 18 months after filing.

A petition under 37 CFR 1.137(f) must be accompanied by:

(1) the reply which is met by the notification of such filing in a foreign country or under a multinational treaty;

(2) the petition fee as set forth in 37 CFR 1.17(m); and

(3) a statement that the entire delay in filing the required reply from the due date of the reply until the filing of a grantable petition was unintentional.

The instant petition has been found to be in compliance with 37 CFR 1.137(f). Accordingly, the failure to timely notify the Office of a foreign or international filing within 45 days after the date of filing of such foreign or international application as provided by 35 U.S.C. § 122(b)(2)(B)(iii) and 37 CFR 1.213(c) is accepted as having been unintentionally delayed.

The previous Request and Certification under 35 U.S.C. § 122(b)(2)(B)(i) has been rescinded.

Any inquiries concerning this decision may be directed to Karen Creasy at (703) 305-8859.

This application is being forwarded to Technology Center Art Unit 2177 for examination in due course.

Frances Hicks

Frances Hicks
Petitions Examiner
Office of Petitions
Office of the Deputy Commissioner
for Patent Examination Policy

UNITED STATES PATENT AND TRADEMARK OFFICE

Commissioner for Patents
United States Patent and Trademark Office
P.O. Box 1450
Alexandria, VA 22313-1450
www.uspto.gov

KERR IP GROUP, LLC
MICHAEL A. KERR
P.O. BOX 22028
CARSON CITY NV 89721

COPY MAILED
DEC 30 2009
OFFICE OF PETITIONS

In re Application of	:	
Mark Andrew Dinan, et al.	:	
Application No. 10/022,795	:	DECISION ON PETITION
Filed: December 20, 2001	:	
Attorney Docket No. NUM 07.01	:	

This is a decision on the petition under 37 CFR 1.137(a), filed October 6, 2009, which is being treated as a petition under 37 CFR 1.181, requesting withdrawal of the Notice of Abandonment mailed August 18, 2009.

The petition is **GRANTED**.

Petitioner requests the Notice of Abandonment mailed August 18, 2009 for failure to respond to the Notice Requiring Excess Claims Fees be withdrawn as petitioner timely filed a response. As evidenced by the itemized copy of the EFS Acknowledgement Receipt and the Fee Worksheet of September 30, 2008, the fee was timely received by the USPTO. Furthermore, a review of the record indicated that the original copy of the fee transmittal is now in the file.

Since the petition under 37 CFR 1.137(a) is deemed unnecessary, this $270 fee will be refunded to the petitioner's deposit account in due course.

Telephone inquiries concerning this decision should be directed to April M. Wise at 571-272-1642. All other inquiries concerning the examination or status of this application should be directed to the Technology Center.

This application is being referred to the Technology Center AU 2457 for appropriate action in the normal courts of business.

/dab/
David Bucci
Petitions Examiner
Office of Petitions

UNITED STATES PATENT AND TRADEMARK OFFICE

Commissioner for Patents
United States Patent and Trademark Office
P.O. Box 1450
Alexandria, VA 22313-1450
www.uspto.gov

Paper No. 23

FORD GLOBAL TECHNOLOGIES, LLC
SUITE 600, PARKLANE TOWERS EAST
ONE PARKLANE BLVD.
DEARBORN, MI 48126

COPY MAILED

APR 1 3 2004

OFFICE OF PETITIONS

In re Application of :
John D. Russell, et al. :
Application No. 10/022,800 :
Filed: December 18, 2001 :
Attorney Docket No. FGTI-021PUS :

ON PETITION

This is a decision on the petition under 37 CFR 1.313(c)(2), filed April 12, 2004 to withdraw the above-identified application from issue after payment of the issue fee.

It does not appear that the instant petition is signed by an attorney of record. However, in accordance with 37 CFR 1.34(a), the signature of B. Anna McCoy appearing on the correspondence shall constitute a representation to the United States Patent and Trademark Office that she is authorized to represent the particular party in whose behalf she acts. However, if Ms. McCoy desires to receive correspondence regarding this file, the appropriate power of attorney documentation must be submitted. A courtesy copy of this decision is being mailed to Ms. McCoy, the petitioner herein. However, until otherwise instructed, all future correspondence regarding this application file will be directed solely to the above-noted correspondence address of record.

The petition is **GRANTED**.

The above-identified application is withdrawn from issue for consideration of a submission under 37 CFR 1.114 (request for continued examination). See 37 CFR 1.313(c)(2).

Petitioner is advised that the issue fee paid on March 1, 2004, in the above-identified application cannot be refunded. If, however, the above-identified application is again allowed, petitioner may request that it be applied towards the issue fee required by the new Notice of Allowance.[1]

Telephone inquiries relating to this decision should be directed to the undersigned at (703) 305-9220.

---

[1]The request to apply the issue fee to the new Notice may be satisfied by completing and returning the new Issue Fee Transmittal Form PTOL-85(b), which includes the following language thereon: "Commissioner for Patents is requested to apply the Issue Fee and Publication Fee (if any) or re-apply any previously paid issue fee to the application identified above." Petitioner is advised that, whether a fee is indicated as being due or not, the Issue Fee Transmittal Form **must** be completed and timely submitted to avoid abandonment. Note the language in bold text on the first page of the Notice of Allowance and Fee(s) Due (PTOL-85).

After the application is received in the Office of Petitions, the file will be forwarded to Technology Center AU 3747 for further processing of the request for continued examination under 37 CFR 1.114.

Sherry D. Brinkley
Petitions Examiner
Office of Petitions
Office of the Deputy Commissioner
for Patent Examination Policy

cc: B. Anna McCoy
KOLISCH HARTWELL, P.C.
520 S.W. Yamhill St., Suite 200
Portland, OR 97204

Receipt #

Atty. Docket No. 42P11309

OIPE JUN 07 2002 JC97 PATENT & TRADEMARK OFFICE

PATENT

IN THE UNITED STATES PATENT AND TRADEMARK OFFICE

In re Application of:	)	
	)	Examiner: Not Yet Assigned
Arjang Fartash, et al.	)	
	)	Art Unit: 2836
Application No.: 10/022,821	)	
	)	
Filed: December 14, 2001	)	
	)	
For: HEAT-SHRINKABLE RETAINER FOR PCB DOUBLE-SIDED ASSEMBLY	)	

Box Missing Parts
Assistant Commissioner for Patents
Washington, D.C. 20231

RESPONSE TO NOTICE TO FILE MISSING PARTS OF APPLICATION

Dear Sir:

In response to the Notice to File Missing parts of Application mailed February 5, 2002, please find enclosed:

(1) two duly executed Declarations and Power of Attorney with respect to the above-referenced patent application;

(2) a check in the amount of $1350.00 in payment of the surcharge of 37 C.F.R. §1.16(e) and Filing Fee; and

(3) a copy of the Notice to File Missing Parts of Application.

FIRST CLASS CERTIFICATE OF MAILING (37 C.F.R. § 1.8(a))

I hereby certify that this correspondence is being deposited with the United States Postal Service as first class mail with sufficient postage in an envelope addressed to the Assistant Commissioner for Patents, Washington, D.C. 20231 on: 5/30/02.

Date of Deposit

Michelle Begay

Name of Person Mailing Correspondence

Michelle Begay — 5/30/02

Signature — Date

(4) a Petition for Extension of Time for two (2) months, extending the period for response to June 5, 2002;

(5) a check in the amount of $400.00 in payment of the fee for two months extension of time under 37 CFR 1.17(a)(2);

(6) a Change of Correspondence Address; and

(7) a Request for Correction of Filing Receipt.

If any additional fee is required, please charge Deposit Account No. 02-2666. A duplicate of this Response is enclosed.

Respectfully submitted,
BLAKELY, SOKOLOFF, TAYLOR & ZAFMAN

Dated: 5/30, 2002

Michael A. Bernadicou
Reg. No. 35,934

Customer No. 008791
12400 Wilshire Boulevard,
Seventh Floor
Los Angeles, California 90025
(408) 720-8300

OIPE JC97
JUN 07 2002
PATENT & TRADEMARK OFFICE

PTO/SB/17(09-00)
Approved for use through 10/31/2002. OMB 0651-0032
Patent and Trademark Office: U.S. DEPARTMENT OF COMMERCE
Under the Paperwork Reduction Act of 1995, no persons are required to respond to a collection of information unless it displays a valid OMB control number.

FEE TRANSMITTAL FOR FY 2002

TOTAL AMOUNT OF PAYMENT ($) $1350.00

Complete if Known:
Application No. 10/022,821
Filing Date December 14, 2001
First Named Inventor Arjang Fartash, et al.
Group Art Unit 2836
Examiner Name Unassigned
Attorney Docket No. 42P11309

METHOD OF PAYMENT (check one)

1. [X] **The Commissioner is hereby authorized to charge indicated fees and credit any over payments to:**

Deposit Account Number 02-2666
Deposit Account Name _____

[ ] **Charge Any Additional Fee Required Under 37 CFR 1.16 and 1.17**

2. X **Payment Enclosed:**
X **Check**
_____ **Money Order**
_____ **Other**

FEE CALCULATION

1. **BASIC FILING FEE**

Large Entity Fee Code	Large Entity Fee ($)	Small Entity Fee Code	Small Entity Fee ($)	Fee Description	Fee Paid
101	740	201	370	Utility application filing fee	740.00
106	330	206	165	Design application filing fee	
107	510	207	255	Plant filing fee	
108	740	208	370	Reissue filing fee	
114	160	214	80	Provisional application filing fee	

SUBTOTAL (1) $_____

2. **EXTRA CLAIM FEES**

			Extra Claims		Fee from below		Fee Paid
Total Claims	42	– 20** =	22	X	18.00	=	396.00
Independent Claims	4	– 3** =	1	X	84.00	=	84.00
Multiple Dependent						=	

**Or number previously paid, if greater; For Reissues, see below.

Large Entity Fee Code	Large Entity Fee ($)	Small Entity Fee Code	Small Entity Fee ($)	Fee Description
103	18	203	9	Claims in excess of 20
102	84	202	42	Independent claims in excess of 3
104	280	204	140	Multiple dependent claim, if not paid
109	84	209	42	**Reissue independent claims over original patent
110	18	210	9	**Reissue claims in excess of 20 and over original patent

SUBTOTAL (2) $ 480.00

FEE CALCULATION (continued)

OIPE JUN 07 2002 PATENT & TRADEMARK OFFICE

3. ADDITIONAL FEES

Large Entity Fee Code	Large Entity Fee ($)	Small Entity Fee Code	Small Entity Fee ($)	Fee Description	Fee Paid
105	130	205	65	Surcharge - late filing fee or oath	130.00
127	50	227	25	Surcharge - late provisional filing fee or cover sheet	
139	130	139	130	Non-English specification	
147	2,520	147	2,520	For filing a request for ex-parte reexamination	
099	8,800	099	8,800	Request for inter partes reexamination	
112	920*	112	920*	Requesting publication of SIR prior to Examiner action	
113	1,840*	113	1,840*	Requesting publication of SIR after Examiner action	
115	110	215	55	Extension for response within first month	
116	400	216	200	Extension for response within second month	
117	920	217	460	Extension for response within third month	
118	1,440	218	720	Extension for response within fourth month	
128	1,960	228	980	Extension for response within fifth month	
119	320	219	160	Notice of Appeal	
120	320	220	160	Filing a brief in support of an appeal	
121	280	221	140	Request for oral hearing	
138	1,510	138	1,510	Petition to institute a public use proceeding	
140	110	240	55	Petition to revive unavoidably abandoned application or unavoidably delayed payment of issue fee	
141	1,280	241	640	Petition to revive unintentionally abandoned application or unintentionally delayed payment of issue fee	
142	1,280	242	640	Utility issue fee (or reissue)	
143	460	243	230	Design issue fee	
144	620	244	310	Plant issue fee	
122	130	122	130	Petitions to the Commissioner	
123	50	123	50	Petitions related to provisional applications	
126	180	126	180	Submission of Information Disclosure Stmt	
581	40	581	40	Recording each patent assignment per property (times number of properties)	
146	740	246	370	For filing a submission after final rejection (see 37 CFR 1.129(a))	
149	740	249	370	For each additional invention to be examined (see 37 CFR 1.129(b))	
179	740	279	370	Request for Continued Examination (RCE)	
169	900	169	900	Request for expedited examination of a design application	

Other fee (specify) _____

Other fee (specify) _____

SUBTOTAL (3) $ 130.00

*Reduced by Basic Filing Fee Paid

SUBMITTED BY:

Typed or Printed Name: Michael A. Bernadicou

Signature: [signature] Date: 5/30/02

Reg. Number: 35,934 Telephone Number: (408) 720-8300

UNITED STATES PATENT AND TRADEMARK OFFICE

COMMISSIONER FOR PATENTS
UNITED STATES PATENT AND TRADEMARK OFFICE
WASHINGTON, D.C. 20231
www.uspto.gov

APPLICATION NUMBER	FILING/RECEIPT DATE	FIRST NAMED APPLICANT	ATTORNEY DOCKET NUMBER
10/022,821	12/14/2001	Arjang Fartash	267/180

22249
LYON & LYON LLP
633 WEST FIFTH STREET
SUITE 4700
LOS ANGELES, CA 90071

OIPE
JUN 07 2002
JC97
PATENT & TRADEMARK OFFICE

CONFIRMATION NO. 3795
FORMALITIES LETTER
OC000000007419718

Date Mailed: 02/05/2002

NOTICE TO FILE MISSING PARTS OF NONPROVISIONAL APPLICATION

FILED UNDER 37 CFR 1.53(b)

Filing Date Granted

An application number and filing date have been accorded to this application. The item(s) indicated below, however, are missing. Applicant is given **TWO MONTHS** from the date of this Notice within which to file all required items and pay any fees required below to avoid abandonment. Extensions of time may be obtained by filing a petition accompanied by the extension fee under the provisions of 37 CFR 1.136(a).

- The statutory basic filing fee is missing.
  Applicant must submit $ **740** *to complete the basic filing fee for a non-small entity. If appropriate, applicant may make a written assertion of entitlement to small entity status and pay the small entity filing fee (37 CFR 1.27).*
- Total additional claim fee(s) for this application is $480.
  - **$396** for **22** total claims over 20.
  - **$84** for **1** independent claims over 3 .
- The oath or declaration is missing.
  A properly signed oath or declaration in compliance with 37 CFR 1.63, identifying the application by the above Application Number and Filing Date, is required.
- To avoid abandonment, a late filing fee or oath or declaration surcharge as set forth in 37 CFR 1.16(l) of $130 for a non-small entity, must be submitted with the missing items identified in this letter.
- **The balance due by applicant is $ 1350.**

A copy of this notice MUST be returned with the reply.

Customer Service Center
Initial Patent Examination Division (703) 308-1202
PART 2 - COPY TO BE RETURNED WITH RESPONSE

/11/2002 YPOLITE1 00000052 10022821
FC:101 740.00 OP
FC:103 396.00 OP
FC:102 84.00 OP
FC:105 130.00 OP

UNITED STATES PATENT AND TRADEMARK OFFICE

Commissioner for Patents
United States Patent and Trademark Office
P.O. Box 1450
Alexandria, VA 22313-1450
www.uspto.gov

COPY MAILED

NOV 1 2 2009

OFFICE OF PETITIONS

PILLSBURY WINTHROP SHAW PITTMAN, LLP
P.O. BOX 10500
MCLEAN, VA 22102

In re Application of	:	
Claude Thibeault, et al.	:	
Application No. 10/022,851	:	ON PETITION
Filed: December 20, 2001	:	
Attorney Docket No. P 276792 P(US)2001-019	:	

This is a decision in response to the petition, filed September 9, 2009, under 37 CFR 1.137(b) to revive the above-identified application.

The petition is **DISMISSED** because it is unsigned. It appears that the petition was intended to be signed by Ms. Alexandra Daoud, an agent registered to practice before the U.S. Patent and Trademark Office, but at present, is not an attorney of record in this application.

37 CFR 1.33(b) states that:

Amendments and other papers filed in the application must be signed by:

(1) An attorney or agent of record appointed in compliance with §1.34(b);
(2) A registered attorney or agent not of record who acts in a representative capacity under the provisions of §1.34(a);
(3) The assignee of record of the entire interest, if there is an assignee of record of the entire interest;
(4) An assignee of record of an undivided part interest, and any assignee(s) of the remaining interest and any applicant retaining an interest, if there is an assignee of record of an undivided part interest; or
(5) All of the applicants (§§ 1.42. 1.43 and 1.47) for patent, unless there is an assignee of record of the entire interest and such assignee has taken action in the application in accordance with §§ 3.71 and 3.73.

This decision is made without prejudice to reconsideration. However, any request for reconsideration must be submitted within TWO (2) MONTHS from the mail date of this decision. Extensions of time under 37 CFR 1.136(a) are permitted. The reconsideration request should include a cover letter entitled "Renewed Petition under 37 CFR 1.137(b)" and any omissions noted above.

While a courtesy copy of this decision is being mailed to Ms. Daoud at the address noted on the petition, all future correspondence regarding this application file will be directed solely to the above-noted correspondence address of record, until otherwise instructed by the applicant.

Further correspondence with respect to this matter should be delivered through one of the following mediums:

By mail: Mail Stop PETITIONS
Commissioner for Patents
Post Office Box 1450
Alexandria, VA 22313-1450

By hand: Customer Service Window
Mail Stop Petitions
Randolph Building
401 Dulany Street
Alexandria, VA 22314

By fax: (571) 273-8300
ATTN: Office of Petitions

By Internet: EFS-Web[1]

Any questions concerning this matter may be directed to the undersigned at (571) 272-3204.

Sherry D. Brinkley
Petitions Examiner
Office of Petitions

CC: ALEXANDRA DAOUD
1 PLACE VILLE-MARIE, SUITE 2500
MONTREAL, QUEBEC , H3B 1R1, CANADA

[1] www.uspto.gov/ebc/efs_help.html (for help using EFS-Web call the Patent Electronic Business Center at (866) 217-9197)

UNITED STATES PATENT AND TRADEMARK OFFICE

Commissioner for Patents
United States Patent and Trademark Office
P.O. Box 1450
Alexandria, VA 22313-1450
www.uspto.gov

OGILVY RENAULT LLP
1, Place Ville Marie
SUITE 2500
MONTREAL QC H3B 1R1 CA CANADA

COPY MAILED
FEB 18 2010

In re Application of
Claude Thibeault, et al.
Application No. 10/022,851
Filed: December 20, 2001
Attorney Docket No. 17273-6US-AD

ON PETITION

This is a decision in response to the renewed petition, filed December 1, 2009, to revive the above-identified application under the provisions of 37 CFR 1.137(b).

The petition is **GRANTED**.

The application became abandoned for a failure to reply in a timely manner to a non-final Office action mailed September 6, 2005. A Notice of Abandonment was mailed on April 19, 2006. On September 9, 2009, a petition under 37 CFR 1.137(b) was filed; however, the petition was subsequently dismissed in a decision mailed November 12, 2009. In response, on December 1, 2009, the present petition was filed.

While this application has been abandoned for an extended period of time, the U.S. Patent and Trademark Office is relying on petitioner's duty of candor and good faith and accepting the statement that "the entire delay in filing the required reply from the due date for the reply until the filing of a grantable petition pursuant to 37 CFR 1.137(b) was unintentional." *See* Changes to Patent Practice and Procedure, 62 Fed. Reg., at 53160 and 53178; 1203 Off. Gaz. Pat. Office, at 88 and 103 (responses to comments 64 and 109) (applicant obligated under 37 CFR 10.18 to inquire into the underlying facts and circumstances when providing the statement required by 37 CFR 1.137(b) to the U.S. Patent and Trademark Office).

Accordingly, the petition satisfies the conditions for revival pursuant to the provisions of 37 CFR 1.137(b) in that petitioner has supplied (1) the reply in the form of an amendment; (2) the petition fee of $810; and (3) an adequate statement of unintentional delay.

This application is being referred to Technology Center AU 2611 for appropriate action in the normal course of business on the reply received September 9, 2009.

Telephone inquiries concerning this decision should be directed to the undersigned at (571) 272-3204. Inquiries relating to further prosecution should be directed to the Technology Center.

Sherry D. Brinkley
Petitions Examiner
Office of Petitions

UNITED STATES PATENT AND TRADEMARK OFFICE

Commissioner for Patents
United States Patent and Trademark Office
P.O. Box 1450
Alexandria, VA 22313-1450
www.uspto.gov

MORGAN LEWIS & BOCKIUS LLP
1111 PENNSYLVANIA AVENUE, N.W.
WASHINGTON, DC 20004

COPY MAILED

JUL 12 2005

OFFICE OF PETITIONS

In re Application of :
Seung Kuk Ahn :
Application No. 10/022,854 : ON PETITION
Filed: December 20, 2001 :
Attorney Docket No. 049128-5030

This is a decision on the petition, filed July 6, 2005 under 37 CFR 1.313(c)(2), to withdraw the above-identified application from issue after payment of the issue fee.

The petition is **GRANTED**.

The above-identified application is withdrawn from issue for consideration of a submission under 37 CFR 1.114 (request for continued examination). See 37 CFR 1.313(c)(2).

Petitioner is advised that the issue fee paid on June 6, 2005 in the above-identified application cannot be refunded. If, however, the above-identified application is again allowed, petitioner may request that it be applied towards the issue fee required by the new Notice of Allowance.[1]

Telephone inquiries should be directed to Irvin Dingle at (571) 272-3210.

This matter is being referred to Technology Center AU 2673 for processing of the request for continued examination under 37 CFR 1.114 and for consideration of the concurrently filed Information Disclosure Statement.

Irvin Dingle
Petitions Examiner
Office of Petitions
Office of the Deputy Commissioner
for Patent Examination Policy

---

[1] The request to apply the issue fee to the new Notice may be satisfied by completing and returning the new Issue Fee Transmittal Form PTOL-85(b), which includes the following language thereon: Commissioner for Patents is requested to apply the Issue Fee and Publication Fee (if any) or re-apply any previously paid issue fee to the application identified above. Petitioner is advised that, whether a fee is indicated as being due or not, the Issue Fee Transmittal Form **must** be completed and timely submitted to avoid abandonment. Note the language in bold text on the first page of the Notice of Allowance and Fee(s) Due (PTOL-85).

UNITED STATES PATENT AND TRADEMARK OFFICE

Commissioner for Patents
United States Patent and Trademark Office
P.O. Box 1450
Alexandria, VA 22313-1450
www.uspto.gov

MORGAN LEWIS & BOCKIUS LLP
1111 PENNSYLVANIA AVENUE NW
WASHINGTON DC 20004

COPY MAILED

NOV 28 2007

OFFICE OF PETITIONS

In re Application of	:	
Seung Kuk Ahn	:	
Application No. 10/022,854	:	DECISION GRANTING PETITION
Filed: December 20, 2001	:	UNDER 37 CFR 1.313(c)(2)
Attorney Docket No. 049128-5030	:	

This is a decision on the petition under 37 CFR 1.313(c)(2), filed November 26, 2007, to withdraw the above-identified application from issue after payment of the issue fee.

The petition is **GRANTED**.

The above-identified application is withdrawn from issue for consideration of a submission under 37 CFR 1.114 (request for continued examination). *See* 37 CFR 1.313(c)(2).

Petitioner is advised that the issue fee paid on October 25, 2007 cannot be refunded. If, however, this application is again allowed, petitioner may request that it be applied towards the issue fee required by the new Notice of Allowance.[1]

Telephone inquiries should be directed to the undersigned at (571) 272-3208.

This application is being referred to Technology Center AU 2629 for processing of the request for continued examination under 37 CFR 1.114 and for consideration of the concurrently filed IDS.

Karen Creasy
Petitions Examiner
Office of Petitions

---

[1] *The request to apply the issue fee to the new Notice may be satisfied by completing and returning the new Part B – Fee(s) Transmittal Form (along with any balance due at the time of submission). Petitioner is advised that the Issue Fee Transmittal Form* ***must*** *be completed and timely submitted to avoid abandonment of the application.*

UNITED STATES PATENT AND TRADEMARK OFFICE

COMMISSIONER FOR PATENTS
UNITED STATES PATENT AND TRADEMARK OFFICE
P.O. BOX 1450
ALEXANDRIA, VA 22313-1450
WWW.USPTO.GOV

Paper No.

COPY MAILED

JUL 07 2009

OFFICE OF PETITIONS

OGILVY RENAULT LLP
1, Place Ville Marie
SUITE 2500
MONTREAL QC H3B 1R1 CA CANADA

In re Application of	:	
Fecteau et al.	:	
Application No. 10/022,856	:	DECISION ON PETITION
Filed: December 20, 2001	:	PURSUANT TO
Attorney Docket No.: 17273-	:	37 C.F.R. § 1.137(B)
7US - AD	:	
Title: METHODS, APPARATUS,	:	
AND SYSTEMS FOR REDUCING	:	
INTERFERENCE ON NEARBY	:	
CONDUCTORS	:	

This is a decision on the petition pursuant to 37 C.F.R. § 1.137(b), filed June 5, 2009, to revive the above-identified application.

This petition pursuant to 37 C.F.R. § 1.137(b) is **DISMISSED**.

The above-identified application became abandoned for failure to submit the issue and publication fees in a timely manner in reply to the Notice of Allowance and Issue Fee Due, mailed August 25, 2005, which set a shortened statutory period for reply of three months. No extensions of time are permitted for transmitting issue[1] or publication fees.[2] Accordingly, the above-identified application became abandoned on November 26, 2005. A Notice of Abandonment was mailed on January 18, 2006.

A grantable petition pursuant to 37 C.F.R. § 1.137(b) must be accompanied by:

(1) The reply required to the outstanding Office

1 See MPEP § 710.02(e)(III).
2 See 37 C.F.R. § 1.211(e).

action or notice, unless previously filed;

(2) The petition fee as set forth in 37 C.F.R. § 1.17(m);

(3) A statement that the entire delay in filing the required reply from the due date for the reply until the filing of a grantable petition pursuant to this paragraph was unintentional. The Commissioner may require additional information where there is a question whether the delay was unintentional, and;

(4) Any terminal disclaimer (and fee as set forth in 37 C.F.R. § 1.20(d)) required pursuant to paragraph (d) of this section.

With this petition, Applicant has submitted the petition, issue, and publication fees, along with the proper statement of unintentional delay.

The first two requirements of Rule 1.137(b) have been met. The fourth requirement of Rule 1.137(b) is not applicable, as a terminal disclaimer is not required.[3]

Regarding the third requirement, Applicant has not established that the entire period of delay was unintentional. It is noted that the present petition was not filed until more than three years and four months had passed since the mailing of the notice of abandonment. It is not clear why the Applicant chose to take no course of action for such a long period of time. It does not appear that any action was taken to further the prosecution of this application, subsequent to the mailing of the notice of abandonment on January 18, 2006, for more than three years and four months.

As such, it appears that the Applicant intentionally allowed this application to go abandoned. The extended inaction of the Applicant appears to be intentional.

A discussion follows.

In order for a petition under 37 C.F.R. § 1.137(b) to be granted, the holder of the rights to the application must have unintentionally allowed the application to go abandoned, and a delay resulting from a deliberately chosen course of action on the part of the applicant is not an "unintentional" delay within the meaning of 37 C.F.R. § 1.137(b).

---

3 See Rule 1.137(d).

The periods of delay:

There are three periods to be considered during the evaluation of a petition under 37 C.F.R. § 1.137(b):

(1) the delay in reply that originally resulted in the abandonment;
(2) the delay in filing an initial petition pursuant to 37 C.F.R. § 1.137(b) to revive the application; and
(3) the delay in filing a grantable petition pursuant to 37 C.F.R. § 1.137(b) to revive the application.

Currently, the delay has not been shown to the satisfaction of the Director to be unintentional for periods (1) or (2).

As to Period (1), the patent statute at 35 U.S.C. § 41(a)(7) authorizes the Director to revive an "unintentionally abandoned application." The legislative history of Public Law 97-247 reveals that the purpose of 35 U.S.C. § 41(a)(7) is to permit the Office to have more discretion than in 35 U.S.C. §§ 133 or 151 to revive abandoned applications in appropriate circumstances, but places a limit on this discretion, stating that "[u]nder this section a petition accompanied by either a fee of $500 or a fee of $50 **would not be granted where the abandonment** or the failure to pay the fee for issuing the patent **was intentional** as opposed to being unintentional or unavoidable." [emphasis added]. See H.R. Rep. No. 542, 97th Cong., 2d Sess. 6-7 (1982), *reprinted in* 1982 U.S.C.C.A.N. 770-71. The revival of an intentionally abandoned application is antithetical to the meaning and intent of the statute and regulation.

35 U.S.C. § 41(a)(7) authorizes the Commissioner to accept a petition "for the revival of an unintentionally abandoned application for a patent." As amended December 1, 1997, 37 C.F.R. § 1.137(b)(3) provides that a petition under 37 C.F.R. § 1.137(b) must be accompanied by a statement that the delay was unintentional, but provides that "[t]he Commissioner may require additional information where there is a question whether the delay was unintentional." Where, as here there is a question whether the initial delay was unintentional, the Applicant must meet the burden of establishing that the delay was unintentional within the meaning of 35 U.S.C. § 41(a)(7) and 37 C.F.R. § 1.137(b). See In re Application of G, 11 USPQ2d 1378, 1380 (Comm'r Pats. 1989); 37 CFR 1.137(b). Here, in view of the inordinate delay of more than three years and four months in resuming prosecution, there is a question whether the entire

delay was unintentional. Applicant should note that the issue is not whether some of the delay was unintentional by any party; rather, the issue is whether the entire delay has been shown to the satisfaction of the Director to be unintentional.

The question under 37 C.F.R. § 1.137(b) for period (1) is whether the delay on the part of the party having the right or authority to reply to avoid abandonment (or not reply) was unintentional. Accordingly, any renewed petition must clearly identify the party having the right to reply to avoid abandonment. That party, in turn must explain what effort(s) was made to reply to the outstanding Office action and further, why no reply was filed. If no effort was made to reply, then that party must explain why the delay in this application does not result from a deliberate course of action (or inaction). Applicant should explain why this application became abandoned subsequent to the mailing of the Notice of Allowance and Issue Fee Due of August 25, 2005. **Statements from both the Applicant and the former counsel of record must be provided**.[4] It must be explained why no response was submitted to this notice for such an extended period of time.

As the courts have made clear, it is pointless for the USPTO to revive a long abandoned application without an adequate showing that the delay did not result from a deliberate course of action. See Lawman Armor v. Simon, 2005 U.S. Dist. LEXIS 10843, 74 USPQ2d 1633 (DC EMich 2005); Field Hybrids, LLC v. Toyota Motor Corp., 2005 U.S. Dist. LEXIS 1159 (D. Minn Jan. 27, 2005); Lumenyte Int'l Corp. v. Cable Lite Corp., Nos. 96-1011, 96-1077, 1996 U.S. App. LEXIS 16400, 1996 WL 383927 (Fed. Cir. July 9, 1996)(unpublished) (patents held unenforceable due to a finding of inequitable conduct in submitting an inappropriate statement that the abandonment was unintentional).

As to Period (2), where the applicant deliberately chose not to seek or persist in seeking the revival of an abandoned application, or where the applicant deliberately chooses to delay seeking the revival of an abandoned application, the resulting delay in seeking revival of the abandoned application cannot be considered as "unintentional" within the meaning of 37 C.F.R. § 1.137(b).[5]

---

4 It is noted that a "Revocation of Power by Assignee with New Power by Assignee and Statement under 37 C.F.R. § 3.73(b)" was filed on June 5, 2009.
5 See MPEP § 711.03(c).

The language of both 35 U.S.C. § 41(a)(7) and 37 C.F.R. § 1.137(b) are clear and unambiguous, and furthermore, without qualification. That is, the delay in filing the reply during prosecution, as well as in filing the petition seeking revival, must have been, without qualification, "unintentional" for the reply to now be accepted on petition. The Office requires that the entire delay be at least unintentional as a prerequisite to revival of an abandoned application to prevent abuse and injury to the public. See H.R. Rep. No. 542, 97th Cong., 2d Sess. 7 (1982), reprinted in 1982 U.S.C.C.A.N. 771 ("[i]n order to prevent abuse and injury to the public the Commissioner . . . . could require applicants to act promptly after becoming aware of the abandonment"). The December 1997 change to 37 C.F.R. § 1.137 did not create any new right to overcome an intentional delay in seeking revival, or in renewing an attempt at seeking revival, of an abandoned application. See Changes to Patent Practice and Procedure; Final Rule Notice, 62 Fed. Reg. 53131, 53160 (October 10, 1997), 1203 Off. Gaz. Pat. Office 63, 87 (October 21, 1997), which clearly stated clear that any protracted delay (here, more than three years and four months) could trigger, as here, a request for additional information. As the courts have since made clear, a protracted delay in seeking revival, as here, requires a petitioner's detailed explanation seeking to excuse the delay as opposed to USPTO acceptance of a general allegation of unintentional delay. See Lawman Armor v. Simon, 2005 U.S. Dist. LEXIS 10843, 74 USPQ2d 1633, at 1637-8 (DC EMich 2005); Field Hybrids, LLC v. Toyota Motor Corp., 2005 U.S. Dist. LEXIS 1159 (D. Minn Jan. 27, 2005) at *21-*23. **Statements are required from both the Applicant and former counsel, explaining why this petition was not filed sooner.**

Moreover, it must be explained what prompted the Applicant to advance the prosecution of this application after the passage of so much time.

Punctuality and Due Diligence:

For more than a century, punctuality and due diligence, equally with good faith, have been deemed essential requisites to the success of those who seek to obtain the special privileges of the patent law, and they are demanded in the interest of the public and for the protection of rival inventors. See: Porter v. Louden, 7 App.D.C. 64 (C.A.D.C. 1895), citing Wollensak v. Sargent, 151 U.S. 221, 228, 38 L. Ed. 137, 14 S. Ct. 291 (1894).

Similarly, an invention benefits no one unless it is made public, and the rule of diligence should be so applied as to encourage reasonable promptness in conferring this benefit upon the public. Automatic Electric Co. v. Dyson, 52 App. D.C. 82; 281 F. 586 (C.A.D.C. 1922). Generally, 35 U.S.C. §6; 37 C.F.R.§§1.181, 182, 183.

The lengthy period of inaction does not appear to be consistent with the requirements of punctuality, due diligence, good faith, and the encouragement of reasonable promptness.

On renewed petition, Applicant will need to address each of these issues, and include statements from both the Applicant and former counsel, if it is to be established that the entire period of delay was unintentional.

Applicant is reminded that any statement of facts should be made by one having firsthand knowledge of the facts set forth therein.

Any reply must be submitted within **TWO MONTHS** from the mail date of this decision. Extensions of time under 37 C.F.R. § 1.136(a) are permitted. The reply should include a cover letter entitled "Renewed Petition pursuant to 37 C.F.R. § 1.137(b)". This is not a final agency action within the meaning of 5 U.S.C § 704.

Thereafter, there will be no further reconsideration of this matter.[6, 7]

The renewed petition should indicate in a prominent manner that the attorney handling this matter is Paul Shanoski, and may be submitted by mail,[8] hand-delivery,[9] or facsimile.[10] Registered

---

6 For more than a century, punctuality and due diligence, equally with good faith, have been deemed essential requisites to the success of those who seek to obtain the special privileges of the patent law, and they are demanded in the interest of the public and for the protection of rival inventors. See: Porter v. Louden, 7 App.D.C. 64 (C.A.D.C. 1895), citing Wollensak v. Sargent, 151 U.S. 221, 228, 38 L. Ed. 137, 14 S. Ct. 291 (1894). An invention benefits no one unless it is made public, and the rule of diligence should be so applied as to encourage reasonable promptness in conferring this benefit upon the public. Automatic Electric Co. v. Dyson, 52 App. D.C. 82; 281 F. 586 (C.A.D.C. 1922). Generally, 35 U.S.C. §6; 37 C.F.R.§§1.181, 182, 183.

7 If, on request for reconsideration, Applicant fails to satisfy the showings burden required: (a) the resulting decision may be one viewed as final agency action; and (b) provisions for reconsideration, such as those at 37 C.F.R. § 1.137(e), will not apply to that decision.

8 Mail Stop Petition, Commissioner for Patents, United States Patent and Trademark Office, P.O. Box 1450, Alexandria, VA, 22313-1450.

users of EFS-Web may alternatively submit a response to this decision via EFS-Web.[11]

If responding by mail, Applicant is advised not to place the undersigned's name on the envelope. Only the information that appears in the footnote should be included - adding anything else to the address will delay the delivery of the response to the undersigned.

Telephone inquiries regarding *this decision* should be directed to the undersigned at (571) 272-3225.[12] All other inquiries concerning examination procedures should be directed to the Technology Center.

Paul Shanoski

Paul Shanoski
Senior Attorney
Office of Petitions

---

9 Customer Window, Randolph Building, 401 Dulaney Street, Alexandria, VA, 22314.
10 (571) 273-8300- please note this is a central facsimile number.
11 https://sportal.uspto.gov/authenticate/authenticateuserlocalepf.html
12 Applicant will note that all practice before the Office should be in writing, and the action of the Office will be based exclusively on the written record in the Office. See 37 C.F.R. § 1.2. As such, Applicant is reminded that no telephone discussion may be controlling or considered authority for Applicant's further action(s).

UNITED STATES PATENT AND TRADEMARK OFFICE

Commissioner for Patents
United States Patent and Trademark Office
P.O. Box 1450
Alexandria, VA 22313-1450
www.uspto.gov

Paper No.

OGILVY RENAULT LLP
1, Place Ville Marie
SUITE 2500
MONTREAL QC H3B 1R1
CANADA

MAILED

SEP 24 2009

OFFICE OF PETITIONS

In re Application of Fecteau et al. Application No. 10/022,856 Filed: December 20, 2001 Attorney Docket No.: 17273-7US - AD Title: METHODS, APPARATUS, AND SYSTEMS FOR REDUCING INTERFERENCE ON NEARBY CONDUCTORS	DECISION ON RENEWED PETITION PURSUANT TO 37 C.F.R. § 1.137(B)

This is a decision on the renewed petition pursuant to 37 C.F.R. § 1.137(b), filed September 4, 2009, to revive the above-identified application.

This renewed petition pursuant to 37 C.F.R. § 1.137(b) is **GRANTED**.

The above-identified application became abandoned for failure to submit the issue and publication fees in a timely manner in reply to the Notice of Allowance and Issue Fee Due, mailed August 25, 2005, which set a shortened statutory period for reply of three months. No extensions of time are permitted for transmitting issue[1] or publication fees.[2] Accordingly, the above-identified application became abandoned on November 26, 2005. A Notice of Abandonment was mailed on January 18, 2006.

A grantable petition pursuant to 37 C.F.R. § 1.137(b) must be accompanied by:

1 See MPEP § 710.02(e)(III).
2 See 37 C.F.R. § 1.211(e).

(1) The reply required to the outstanding Office action or notice, unless previously filed;
(2) The petition fee as set forth in 37 C.F.R. § 1.17(m);
(3) A statement that the entire delay in filing the required reply from the due date for the reply until the filing of a grantable petition pursuant to this paragraph was unintentional. The Commissioner may require additional information where there is a question whether the delay was unintentional, and;
(4) Any terminal disclaimer (and fee as set forth in 37 C.F.R. § 1.20(d)) required pursuant to paragraph (d) of this section.

An original petition pursuant to 37 C.F.R. § 1.137(b) was filed on June 5, 2009, along with the petition, issue, and publication fees, and the proper statement of unintentional delay. The original petition was dismissed via the mailing of a decision on July 7, 2009, which indicated that the first two requirements of Rule 1.137(b) had been met, and that the fourth requirement of Rule 1.137(b) is not applicable, as a terminal disclaimer is not required.[3]

With this renewed petition, Petitioner has included three statements of fact, which establish that the entire period of delay was unintentional.

Pursuant to this decision, the Office of Patent Publication will be notified of this decision so that the present application can be processed into a patent.

Petitioner may find it beneficial to view Private PAIR within a fortnight of the present decision to ensure that the revival has been acknowledged by the Office of Patent Publication in response to this decision. It is noted that all inquiries with regard to any failure of that change in status should be directed to the Office of Patent Publication where that change of status must be effected - **the Office of Petitions cannot effectuate a change of status**.

Telephone inquiries regarding *this decision* should be directed to Senior Attorney Paul Shanoski at (571) 272-3225.[4] All other

3 See Rule 1.137(d).
4 Petitioner will note that all practice before the Office should be in writing, and the action of the Office will be based exclusively on the

inquiries concerning the status of the application should be directed to the Office of Patent Publication at 571-272-4200.

Anthony Knight
Supervisor
Office of Petitions

---

written record in the Office. See 37 C.F.R. § 1.2. As such, Petitioner is reminded that no telephone discussion may be controlling or considered authority for any further action(s) of Petitioner.

UNITED STATES PATENT AND TRADEMARK OFFICE

UNITED STATES DEPARTMENT OF COMMERCE
United States Patent and Trademark Office
Address: COMMISSIONER FOR PATENTS
P.O. Box 1450
Alexandria, Virginia 22313-1450
www.uspto.gov

APPLICATION NO.	FILING DATE	FIRST NAMED INVENTOR	ATTORNEY DOCKET NO.	CONFIRMATION NO.
10/022,871	12/20/2001	Stephen Leon Lipscomb	US 1297/01	6302

7590 01/11/2005

Law Office - Dinesh Agarwal, P.C.
Suite 330
5350 Shawnee Road
Alexandria, VA 22312

EXAMINER
THOMAS, ALEXANDER S

ART UNIT	PAPER NUMBER
1772	

DATE MAILED: 01/11/2005

Please find below and/or attached an Office communication concerning this application or proceeding.

UNITED STATES PATENT and TRADEMARK OFFICE
UNDER SECRETARY OF COMMERCE FOR INTELLECTUAL PROPERTY AND
DIRECTOR OF THE UNITED STATES PATENT AND TRADEMARK OFFICE
WASHINGTON, D.C. 20231
WWW.USPTO.GOV

Mailed: HYP

Paper No. ___

In re application of STEPHEN L. LIPSCOMB Serial No. 10/022,871 Filed: DECEMBER 20, 2001 For: A WEB STRUCTURE AND METHOD FOR MAKING THE SAME	: : : : : :	DECISION ON PETITION

This is a decision on the PETITION TO THE COMMISSIONER UNDER 37 C.F.R. э 1.84(a)(2) TO ACCEPT COLOR PHOTOGRAPHS, filed August 20, 2004, to permit color photographs since (1) the fee as required by 37 CFR 1.17(h) has been paid, (2) three sets of the color photographs have been filed, (3) the specification includes the language set forth in 37 CFR 1.84(a)(2)(iv), and (4) an explanation is provided stating why color photographs are necessary. The color photographs include Figures 17-21.

A review of the application record indicates that all of the requirements for acceptance of color photographs have been met.

The petition is **GRANTED**.

Harold Y. Pyon
Supervisory Patent Examiner
Technology Center 1700

DINESH AGARWAI, P.C.
5350 Shawnee Road, Suite 330
Alexandria, Virginia 22312

UNITED STATES PATENT AND TRADEMARK OFFICE

COMMISSIONER FOR PATENTS
UNITED STATES PATENT AND TRADEMARK OFFICE
WASHINGTON, D.C. 20231
www.uspto.gov

Paper No. 6

COPY MAILED

AUG 2 1 2002

OFFICE OF PETITIONS

Ryan, Mason & Lewis, LLP
90 Forest Avenue
Locust Valley, NY 11560

In re Application of
Anderson, et al.
Application No. 10/022,926
Filed: December 18, 2001
Docket No.: 5-13-9-12
For: METHODS AND APPARATUS FOR AUTOMATED MONITORING AND ACTION TAKING BASED ON DECISION SUPPORT MECHANISM

DECISION REFUSING STATUS UNDER 37 CFR 1.47(a)

This decision is in response to the petition under 37 CFR 1.47(a), filed May 15, 2002.

The petition is **DISMISSED**.

Rule 47 applicant is given TWO MONTHS from the mailing date of this decision to reply, correcting the below-noted deficiencies. Any reply should be entitled "Request for Reconsideration of Petition under 37 CFR 1.47(a)," and should only address the deficiencies noted below, except that the reply may include an oath or declaration executed by the non-signing inventor. Failure to respond will result in abandonment of the application. Any extensions of time will be governed by 37 CFR 1.136(a).

The above-identified application was filed December 18, 2001 without an executed oath or declaration and naming Gregory Anderson, Vinod Anupam, Richard B. Hull, and Bharat Kumar as joint inventors. Accordingly, on January 15, 2002, a "Notice to File Missing Parts of Nonprovisional Application" was mailed, requiring an executed oath or declaration and a surcharge.

A grantable petition under 37 CFR 1.47(a) requires: (1) proof that the non-signing inventor cannot be reached or refuses to sign the oath or declaration after having been presented with the application papers (specification, claims, drawings, oath or declaration); (2) an acceptable oath or declaration in compliance with 35 USC 115 and 116; (3) the petition fee; and (4) a statement of the last known address of the non-signing inventor.

The petition lacks requirement (1) stated above. The petition lacks sufficient evidence that the non-signing inventor cannot be reached, was ever presented with a copy of the application papers (specification, claims, drawings, oath or declaration), or, having been presented with the application papers, refused to sign the oath or declaration.

William E. Lewis states that a declaration and power of attorney were forwarded to inventor Richard B. Hull with instruction for Richard B. Hull to coordinate the execution of the declaration by the inventors. William E. Lewis further states that on two

separate occasions, telephone messages were left for inventor Gregory Anderson to sign the declaration and that to date, inventor Gregory Anderson has not signed the declaration.

Richard B. Hull states that the declaration and power of attorney were forwarded to inventor Gregory Anderson on or about March 8, 2002. Richard B. Hull further states that Gregory Anderson indicated he would not sign the declaration due to his "continuing concern over not getting appropriate recognition of his contributions to the Application from his management at Avaya."

Petitioner is advised that before a refusal to sign an oath or declaration can be alleged, it must be demonstrated that a *bona fide* effort has been made to present a copy of the application papers (specification, claims, drawings, and oath or declaration) to the non-signing inventor. A copy of the application papers should be sent to the last known address of the non-signing inventor, or, if the non-signing inventor is represented by counsel, to the address of the non-signing inventor's attorney. *See*, MPEP 409.03(d). Petitioner has failed to establish that the inventor received the application papers and thereafter refused to sign the declaration.

Any renewed petition must be supported by evidence that the inventors were presented with a copy of the application papers. In particular, the renewed petition should set forth the manner in which the application papers were presented to the non-signing inventors. Petitioner may wish to provide the Office with copies of dated cover letters and, if available, copies of mailing receipts as evidence that the non-signing inventor was presented with a copy of the application papers. If, after having been presented with the application papers, an oral refusal is made by a non-signing inventor, this fact along with the time and place of the refusal must be stated in an affidavit or declaration signed by the person to whom the refusal was made. Any written refusal to execute the oath or declaration by an inventor should likewise be submitted. Petitioner's attention is directed to MPEP 409.03(d) for further information on the presumptive evidence required for accordance of status under 37 CFR 1.47.

Further correspondence with respect to this matter should be addressed as follows:

By mail: Commissioner for Patents
Box DAC
Washington, DC 20231

By FAX: (703) 308-6916
Attn: Office of Petitions

By hand: Crystal Plaza Four, Suite 3C23
2201 S. Clark Place
Arlington, VA

Telephone inquiries related to this decision may be directed to the undersigned at (703) 305-0310.

Alesia M. Brown
Petitions Attorney
Office of Petitions
Office of the Deputy Commissioner
for Patent Examination Policy

UNITED STATES PATENT AND TRADEMARK OFFICE

COMMISSIONER FOR PATENTS
UNITED STATES PATENT AND TRADEMARK OFFICE
WASHINGTON, D.C. 20231
www.uspto.gov

Paper No. 8

COPY MAILED

OCT 2 9 2002

OFFICE OF PETITIONS

Ryan, Mason & Lewis, LLP
90 Forest Avenue
Locust Valley, NY 11560

In re Application of
Anderson, et al.
Application No. 10/022,926
Filed: December 18, 2001
Docket No.: 5-13-9-12
For: METHODS AND APPARATUS FOR AUTOMATED MONITORING AND ACTION TAKING BASED ON DECISION SUPPORT MECHANISM

DECISION GRANTING STATUS UNDER 37 CFR 1.47(a)

This decision is in response to the renewed petition under 37 CFR 1.47(a), filed October 23, 2002.

The petition is **GRANTED**.

Petitioner has shown that inventor Gregory Anderson has refused to join in the filing of the above-identified application after having been presented with the application papers.

The above-identified application and papers have been reviewed and found in compliance with 37 CFR 1.47(a). This application is hereby accorded Rule 1.47(a) status.

As provided in Rule 1.47(c), this Office will forward notice of this application's filing to the non-signing inventor at the address given in the petition. Notice of the filing of this application will also be published in the Official Gazette.

After this decision is mailed, the above-identified application will be returned to the Office of Initial Patent Examination for further processing.

Telephone inquiries related to this decision may be directed to the undersigned at (703) 305-0310.

Alesia M. Brown
Petitions Attorney
Office of Petitions
Office of the Deputy Commissioner
for Patent Examination Policy

UNITED STATES PATENT AND TRADEMARK OFFICE

COMMISSIONER FOR PATENTS
UNITED STATES PATENT AND TRADEMARK OFFICE
WASHINGTON, D.C. 20231
www.uspto.gov

GREGORY ANDERSON
509 BELMONT
COLLEYVILLE, TX 76034

COPY MAILED

OCT 29 2002

OFFICE OF PETITIONS

In re Application of
Anderson, et al.
Application No. 10/022,926
Filed: December 18, 2001
Docket No.: 5-13-9-12
For: METHODS AND APPARATUS FOR AUTOMATED MONITORING AND ACTION TAKING BASED ON DECISION SUPPORT MECHANISM

LETTER

Dear Sir:

You are named as an inventor in the above-identified United States patent application filed under the provisions of 35 U.S.C. 116 (United States Code) and 37 C.F.R. § 1.47(a), Rules of Practice in Patent Cases. Should a patent be granted on the application you will be designated therein as a joint inventor.

As a named inventor you are entitled to inspect any paper in the file wrapper of the application, order copies of all or any part thereof (at a prepaid cost as per 37 C.F.R. § 1.19) or make your position of record in the application. Alternatively, you may arrange to do any of the preceding through a registered patent attorney or agent presenting written authorization from you. If you care to join the application, counsel of record (see below) would presumably assist you. Joining in the application would entail the filing of an appropriate oath or declaration by you pursuant to 37 C.F.R. § 1.63.

Telephone inquiries regarding this communication should be directed to the undersigned at (703) 305-0310. Requests for information regarding your application should be directed to the File Information Unit at (703) 308-2733. Information regarding how to pay for and order a copy of the application, or a specific paper in the application, should be directed to Certification Division at (703) 308-9726 or 1-800-972-6382 (outside the Washington D.C. area).

Alesia M. Brown
Petitions Attorney
Office of Petitions
Office of the Deputy Commissioner
for Patent Examination Policy

CC: Ryan, Mason & Lewis, LLP
90 Forest Avenue
Locust Valley, NY 11560

UNITED STATES PATENT AND TRADEMARK OFFICE

Commissioner for Patents
United States Patent and Trademark Office
P.O. Box 1450
Alexandria, VA 22313-1450
www.uspto.gov

Paper No. 17

SWIDLER BERLIN SHEREFF FRIEDMAN
3000 K STREET, NW
BOX IP
WASHINGTON DC 20007

COPY MAILED

SEP 22 2004

OFFICE OF PETITIONS

In re Application of	:	
Dung H. Ky	:	
Application No. 10/022,947	:	DECISION GRANTING PETITION
Filed: December 17, 2001	:	UNDER 37 CFR 1.137(b)
Attorney Docket No. 25241.0002	:	

This is a decision on the petition under 37 CFR 1.137(b), filed July 13, 2004, to revive the above-identified application.

The petition is **GRANTED**.

The petition satisfies the conditions for revival pursuant to the provisions of 37 CFR 1.137(b) in that (1) the reply in the form of a RCE and an amendment; (2) the petition fee; and (3) the required statement of unintentional delay have been received. Accordingly, the reply to the final Office action of April 21, 2003 is accepted as having been unintentionally delayed.

Telephone inquiries concerning this decision should be directed to the undersigned at (703) 305-8859.

The application file is being forwarded to Technology Center Art Unit 2654.

Karen Creasy

Karen Creasy
Petitions Examiner
Office of Petitions
Office of the Deputy Commissioner
for Patent Examination Policy

UNITED STATES PATENT AND TRADEMARK OFFICE

Commissioner for Patents
United States Patent and Trademark Office
P. O. Box 1450
Alexandria, VA 22313-1450
www.uspto.gov

Paper No. 7

FULWIDER PATTON LEE & UTECHT, LLP
HOWARD HUGHES CENTER
6060 CENTER DRIVE
TENTH FLOOR
LOS ANGELES CA 90045

COPY MAILED

AUG 2 1 2003

OFFICE OF PETITIONS

In re Application of	:	
CALLOL et al.	:	
Application No. 10/022,996	:	DECISION GRANTING PETITION
Filed: December 17, 2001	:	UNDER 37 CFR 1.137(b)
Attorney Docket No. ACS 57812	:	

This is a decision on the petition, filed July 22, 2003, which is being treated as a petition under 37 CFR 1.137(b) to revive the present nonprovisional application for failure to timely notify the U.S. Patent and Trademark (USPTO) of the filing of an application in a foreign country, or under a multinational treaty that requires publication of applications eighteen months after filing. *See* 37 CFR 1.137(f).

The petition is **GRANTED**.

Petitioner states that the present nonprovisional application is the subject of an application filed in an 18 month publication country on December 26, 2002. However, the USPTO was unintentionally not notified of this filing within 45 days subsequent to the filing of the subject application in an eighteen month publication country.

In view of the above, this application became abandoned pursuant to 35 U.S.C. 122(b)(2)(B)(iii) and 37 CFR 1.213(c) for failure to timely notify the Office of the filing of an application in a foreign country or under a multilateral international agreement that requires publication of applications 18 months after filing.

A petition to revive an application abandoned pursuant to 35 U.S.C. 122(b)(2)(B)(iii) for failure to notify the USPTO of a foreign filing must be accompanied by:

(1) the required reply which is met by the notification of such filing in a foreign country or under a multinational treaty;

(2) the petition fee as set forth in 37 CFR 1.17(m); and

(3) a statement that the entire delay in filing the required reply from the due date of the reply until the filing of a grantable petition was unintentional.

The present petition has been found to be in compliance with 37 CFR 1.137(b). Accordingly, the failure to timely notify the USPTO of a foreign or international filing within 45 days after the date of filing of such foreign or international application as provided by 35 U.S.C. 122(b)(2)(B)(iii) and 37 CFR 1.213(c) is accepted as having been unintentionally delayed.

The previous Request and Certification under 35 U.S.C. 122(b)(2)(B)(i) has been rescinded. Further, the Office records indicate that the application published on July 3, 2003.

This application is being forwarded to Technology Center Art Unit 3731 for examination in due course.

Any inquiries concerning this decision may be directed to the undersigned at (703) 306-5589.

Christina Tartera Donnell

Christina Tartera Donnell
Senior Petitions Attorney
Office of Petitions

UNITED STATES PATENT AND TRADEMARK OFFICE

Commissioner for Patents
United States Patent and Trademark Office
P.O. Box 1450
Alexandria, VA 22313-1450
www.uspto.gov

PERKINS COIE LLP
P.O. BOX 2168
MENLO PARK CA 94026

COPY MAILED

MAR 0 3 2006

OFFICE OF PETITIONS

ON PETITION

In re Application of	:	
Hadfield et al.	:	
Application No. 10/023,010	:	
Filed: December 17, 2001	:	
Attorney Docket No. 60072.8002.US01	:	

This is a decision on the petition under 37 C.F.R. § 1.137(b), filed January 30, 2006, to revive the above-identified application.

The petition is **GRANTED.**

The petition satisfies the conditions for revival pursuant to the provisions of 37 CFR 1.137(b) in that (1) the reply in the form of an Election; (2) the petition fee; and (3) the required statement of unintentional delay have been received. Accordingly, the response has been accepted as having been unintentionally delayed.

This matter is being referred to Technology Center 2100 for further examination on the merits.

Telephone inquiries regarding this decision should be directed to the undersigned at (571) 272-3206.

Liana Chase
Petitions Examiner
Office of Petitions

UNITED STATES PATENT AND TRADEMARK OFFICE

COMMISSIONER FOR PATENTS
UNITED STATES PATENT AND TRADEMARK OFFICE
P.O. BOX 1450
ALEXANDRIA, VA 22313-1450
www.uspto.gov

BOEHRINGER INGELHEIM CORPORATION
900 RIDGEBURY ROAD
P. O. BOX 368
RIDGEFIELD, CT 06877

COPY MAILED

NOV 0 9 2004

OFFICE OF PETITIONS

In re Application of :
Frank Himmelsbach, et al. :
Application No. 10/023,099 :
Filed: December 17, 2001 :
Atty Docket No. 5/1310 :

ON PETITION

This is a decision on the petition, filed November 8, 2004, under 37 CFR 1.313(c)(2) to withdraw the above-identified application from issue after payment of the issue fee.

The petition is **GRANTED**.

The above-identified application is withdrawn from issue for consideration of a submission under 37 CFR 1.114 (request for continued examination). See 37 CFR 1.313(c)(2).

Petitioner is advised that the issue fee paid on November 1, 2004, using a Certificate of Mailing or Transmission under 37 CFR 1.8 dated October 28, 2004, in the above-identified application cannot be refunded. If, however, the above-identified application is again allowed, petitioner may request that it be applied towards the issue fee required by the new Notice of Allowance. [1]

Telephone inquiries relating to this decision should be directed to the undersigned at (571) 272-3204.

The application is being referred to Technology Center AU 1624 for further processing of the request for continued examination under 37 CFR 1.114 filed November 8, 2004.

Sherry D. Brinkley
Petitions Examiner
Office of Petitions
Office of the Deputy Commissioner
for Patent Examination Policy

[1] The request to apply the issue fee to the new Notice may be satisfied by completing and returning the new Issue Fee Transmittal Form PTOL-85(b), which includes the following language thereon: "Commissioner for Patents is requested to apply the Issue Fee and Publication Fee (if any) or re-apply any previously paid issue fee to the application identified above." Petitioner is advised that, whether a fee is indicated as being due or not, the Issue Fee Transmittal Form **must** be completed and timely submitted to avoid abandonment. Note the language in bold text on the first page of the Notice of Allowance and Fee(s) Due (PTOL-85).

UNITED STATES PATENT AND TRADEMARK OFFICE

Commissioner for Patents
United States Patent and Trademark Office
P.O. Box 1450
Alexandria, VA 22313-1450
www.uspto.gov

Date : November 26, 2007

Patent No. :7,019,012
Inventor(s) :Frank-Himmelsbach, et al.
Issued :March 28, 2006
Title :QUINAZOLINE DERIVATIVES AND PHAMACEUTICAL COMPOSITIONS CONTAINING :THEM
Docket No. :5/1310

Re: Request for Certificate of Correction

Consideration has been given your request for the issuance of a certificate of correction for the above-identified patent under the provisions of 37 CFR 1.322 and/or 1.323.

Assignees' names and addresses (assignment data) printed in a patent are based *solely* on information supplied in the appropriate space for identifying the assignment data, i.e., item 3 of the Fee(s) Transmittal Form PTOL-85B. After payment of the issue fee, correction of assignment data submitted on the PTOL-85B can only be done by Certificate of Correction under 37 CFR 1.323, with a request under 37 CFR 3.81(b).

A request for a patent to be corrected to state the name of the assignee must:

A. state that the assignment was submitted for recordation as set forth in 37 CFR 3.11 before issuance of the patent;

B. include a request for a certificate of correction under 37 CFR 1.323 along with the fee set forth in 37 CFR 1.20(a); and

C. include the processing fee set forth in 37 CFR 1.17(i).

If the request is granted, Certificates of Correction Branch will be notified that a Certificate of Correction may be issued.

See Manual of Patent Examining Procedure, Section 1481.01 (Rev. 3) (Oct. 2005).

Applicant has not included items A and or C above, accordingly, the request for Certificate of Correction to add or change the assignee data is dismissed.

Any request under 37 CFR 3.81(b) should be directed to the following address or facsimile number:

By mail: Mail Stop PETITIONS
Commissioner for Patents
Post Office Box 1450
Alexandria, VA 22313-1450

By hand: Customer Service Window
Randolph Building
401 Dulany Street
Alexandria, VA 22314

By fax: 571-273-8300
ATTN: Office of Petitions

If a fee (currently $100) was previously submitted for consideration of a Request for Certificate of Correction, under CFR 1.323, to correct assignment data, no additional fee is required.

Any inquiry concerning this communication should be directed to Ms. A. Green at (703) 308-9380 ext. 123.

For Cecelia Newman
Decisions & Certificates
of Correction Branch
(703) 308-9390 or (703) 308- 9380 ext. 123

Michael P. Morris
Boehringer Ingelheim Corporation
900 Ridgefield, CT 06877-0368

CBN/arg

UNITED STATES PATENT AND TRADEMARK OFFICE

Commissioner for Patents
United States Patent and Trademark Office
P.O. Box 1450
Alexandria, VA 22313-1450
www.uspto.gov

NXP, B.V.
NXP INTELLECTUAL PROPERTY DEPARTMENT
1109 MCKAY DRIVE, M/S41-SJ
SAN JOSE, CA 95131

COPY MAILED

MAY 2 1 2008

OFFICE OF PETITIONS

In re Application of :
MEINDL, et al. :
Application No. 10/023,118 :
Filed: December 17, 2001 :
Attorney Docket No. **AT 000071** :

DECISION ON PETITION
UNDER 37 CFR 1.137(b)

This is a decision on the petition under the unintentional provisions of 37 CFR 1.137(b), filed April 3, 2007, to revive the above-identified application.

The petition is **DISMISSED.**

A grantable petition under 37 CFR 1.137(b) must be accompanied by: (1) the required reply, unless previously filed; (2) the petition fee as set forth in 37 CFR 1.17(m); (3) a statement that the entire delay in filing the required reply from the due date for the reply until the filing of a grantable petition pursuant to 37 CFR 1.137(b) was unintentional; and (4) any terminal disclaimer (and fee as set forth in 37 CFR 1.20(d)) required by 37 CFR 1.137(d). Where there is a question as to whether either the abandonment or the delay in filing a petition under 37 CFR 1.137 was unintentional, the Director may require additional information. See MPEP 711.03(c)(II)(C) and (D).

The application became abandoned for failure to timely file a reply within the meaning of 37 CFR 1.113 to the final Office action of January 24, 2006. The proposed reply required for consideration of a petition to revive must be a Notice of Appeal (and appeal fee required by 37 CFR 41.20(b)(2)), an amendment that *prima facie* places the application in condition for allowance, a Request for Continued Examination (RCE) and submission (37 CFR 1.114), or the filing of a continuing application under 37 CFR 1.53(b). *See* MPEP 711.03(c)(II)(A)(2). Since the amendment submitted does not *prima facie* place the application in condition for allowance, the reply required must be a Notice of Appeal (and appeal fee), RCE, or the filing of a continuing application under 37 CFR 1.53(b). The instant petition lacks item (1) a proper reply.

It is noted that an amendment was included with the petition filed April 3, 2007. However, the amendment is considered non-responsive, since it did not place the application in condition for allowance. See the attached Advisory Action. The

proposed reply required for consideration of a petition to revive this application must be a Notice Of Appeal (and appeal fee required under 37 CFR 1.17 (b)), and amendment that *prima facie* places the application in condition for allowance, or the filing of a submission under 37 CFR 114 (RCE) or a continuing application under 37 CFR 1.53 (b). See MPEP 711.03 (c)(II)(A)(2).

Any request for reconsideration of this decision must be submitted within TWO (2) MONTHS from the mail date of this decision. Extensions of time under 37 CFR 1.136(a) are permitted. The reconsideration request should include a cover letter entitled "Renewed Petition under 37 CFR 1.137(b)." This is **not** a final agency action within the meaning of 5 U.S.C. § 704.

Further correspondence with respect to this matter should be addressed as follows:

By Mail: Mail Stop PETITION
Commissioner for Patents
P. O. Box 1450
Alexandria, VA 22313-1450

By hand: U. S. Patent and Trademark Office
Customer Service Window, Mail Stop Petitions
Randolph Building
401 Dulany Street
Alexandria, VA 22314

The centralized facsimile number is **(571) 273-8300.**

Telephone inquiries concerning this decision should be directed to Monica A. Graves at (571) 272-7253.

Brian W. Brown
Petitions Examiner
Office of Petitions

Attachment: Advisory Action

PAGE 1/2 * RCVD AT 5/9/2008 3:08:48 PM [Eastern Daylight Time] * SVR:USPTO-EFXRF-6/8 * DNIS:2730602 * CSID:7033059508 * DURATION (mm-ss):01-48

Advisory Action Before the Filing of an Appeal Brief	Application No. 10/023,118	Applicant(s) MEINDL ET AL.	
	Examiner PIERRE-LOUIS DESIR	Art Unit 2617	

--The MAILING DATE of this communication appears on the cover sheet with the correspondence address --

THE REPLY FILED 03 April 2007 FAILS TO PLACE THIS APPLICATION IN CONDITION FOR ALLOWANCE.

1. ☒ The reply was filed after a final rejection, but prior to or on the same day as filing a Notice of Appeal. To avoid abandonment of this application, applicant must timely file one of the following replies: (1) an amendment, affidavit, or other evidence, which places the application in condition for allowance; (2) a Notice of Appeal (with appeal fee) in compliance with 37 CFR 41.31; or (3) a Request for Continued Examination (RCE) in compliance with 37 CFR 1.114. The reply must be filed within one of the following time periods:
   a) ☒ The period for reply expires 3 months from the mailing date of the final rejection.
   b) ☐ The period for reply expires on: (1) the mailing date of this Advisory Action, or (2) the date set forth in the final rejection, whichever is later. In no event, however, will the statutory period for reply expire later than SIX MONTHS from the mailing date of the final rejection.
   Examiner Note: If box 1 is checked, check either box (a) or (b). ONLY CHECK BOX (b) WHEN THE FIRST REPLY WAS FILED WITHIN TWO MONTHS OF THE FINAL REJECTION. See MPEP 706.07(f).

Extensions of time may be obtained under 37 CFR 1.136(a). The date on which the petition under 37 CFR 1.136(a) and the appropriate extension fee have been filed is the date for purposes of determining the period of extension and the corresponding amount of the fee. The appropriate extension fee under 37 CFR 1.17(a) is calculated from: (1) the expiration date of the shortened statutory period for reply originally set in the final Office action; or (2) as set forth in (b) above, if checked. Any reply received by the Office later than three months after the mailing date of the final rejection, even if timely filed, may reduce any earned patent term adjustment. See 37 CFR 1.704(b).

NOTICE OF APPEAL

2. ☐ The Notice of Appeal was filed on _____. A brief in compliance with 37 CFR 41.37 must be filed within two months of the date of filing the Notice of Appeal (37 CFR 41.37(a)), or any extension thereof (37 CFR 41.37(e)), to avoid dismissal of the appeal. Since a Notice of Appeal has been filed, any reply must be filed within the time period set forth in 37 CFR 41.37(a).

AMENDMENTS

3. ☐ The proposed amendment(s) filed after a final rejection, but prior to the date of filing a brief, will not be entered because
   (a) ☐ They raise new issues that would require further consideration and/or search (see NOTE below);
   (b) ☐ They raise the issue of new matter (see NOTE below);
   (c) ☐ They are not deemed to place the application in better form for appeal by materially reducing or simplifying the issues for appeal; and/or
   (d) ☐ They present additional claims without canceling a corresponding number of finally rejected claims.
   NOTE: _____. (See 37 CFR 1.116 and 41.33(a)).
4. ☐ The amendments are not in compliance with 37 CFR 1.121. See attached Notice of Non-Compliant Amendment (PTOL-324).
5. ☐ Applicant's reply has overcome the following rejection(s): _____.
6. ☐ Newly proposed or amended claim(s) _____ would be allowable if submitted in a separate, timely filed amendment cancelling the non-allowable claim(s).
7. ☒ For purposes of appeal, the proposed amendment(s): a) ☒ will not be entered, or b) ☐ will be entered and an explanation of how the new or amended claims would be rejected is provided below or appended.
   The status of the claim(s) is (or will be) as follows:
   Claim(s) allowed: _____.
   Claim(s) objected to: _____.
   Claim(s) rejected: 1-15.
   Claim(s) withdrawn from consideration: _____.

AFFIDAVIT OR OTHER EVIDENCE

8. ☐ The affidavit or other evidence filed after a final action, but before or on the date of filing a Notice of Appeal will not be entered because applicant failed to provide a showing of good and sufficient reasons why the affidavit or other evidence is necessary and was not earlier presented. See 37 CFR 1.116(e).
9. ☐ The affidavit or other evidence filed after the date of filing a Notice of Appeal, but prior to the date of filing a brief, will not be entered because the affidavit or other evidence failed to overcome all rejections under appeal and/or appellant fails to provide a showing a good and sufficient reasons why it is necessary and was not earlier presented. See 37 CFR 41.33(d)(1).
10. ☐ The affidavit or other evidence is entered. An explanation of the status of the claims after entry is below or attached.

REQUEST FOR RECONSIDERATION/OTHER

11. ☒ The request for reconsideration has been considered but does NOT place the application in condition for allowance because: See Continuation Sheet.
12. ☐ Note the attached Information *Disclosure Statement*(s). (PTO/SB/08) Paper No(s). _____
13. ☐ Other: _____.

/Pierre-Louis Desir/
Examiner, Art Unit 2617

JEAN GELIN
PRIMARY EXAMINER

Jean Gelin 5/7/08

05/09/08 FRI 15:16 FAX 7033059508 WORKGROUP 2740 001

PAGE 2/2 * RCVD AT 5/9/2008 3:08:48 PM [Eastern Daylight Time] * SVR:USPTO-EFXRF-6/8 * DNIS:2730602 * CSID:7033059508 * DURATION (mm-ss):01-48

Continuation of 11. does NOT place the application in condition for allowance because: Applicant argues that Novis fails to recite a "second communication means disposed within the housing for the contactless retrieval of control information stored in a data carrier which is detachably connected to the housing of the processing device." Applicant further adds that the smart card 18 in Novis is inserted into the slot 16 of portable electronic device 10 and is therefore inside the housing 11 of portable electronic device 10 and not detachably connected to the housing.

Examiner respectfully disagrees with Applicant's assertions of Novis. Novis discloses a housing 11, which includes a slot 16 for receiving a smart card 18. Novis also discloses that the smart card may be inserted or not inserted into the slot 16 of the housing 11 (see col. 3, lines 35-41, and col. 6, lines 16-20). The insertion and the removal of the smart card into and from the slot, however broadly, represent the smart card being detachably connected to the housing. Therefore, the rejection stands..

05/09/08 FRI 15:17 FAX 7033059508 WORKGROUP 2740 002

UNITED STATES PATENT AND TRADEMARK OFFICE

Commissioner for Patents
United States Patent and Trademark Office
P.O. Box 1450
Alexandria, VA 22313-1450
www.uspto.gov

NXP, B.V.
NXP INTELLECTUAL PROPERTY DEPARTMENT
1109 MCKAY DRIVE, M/S41-SJ
SAN JOSE CA 95131

MAILED

FEB 17 2009

OFFICE OF PETITIONS

In re Application of	:	
Reinhard **MEINDL, et al.**	:	
Application No. 10/023,118	:	DECISION ON PETITION
Filed: December 17, 2001	:	UNDER 37 CFR 1.137(b)
Attorney Docket No. **AT 000071**	:	

This is a decision on the renewed petition under the unintentional provisions of 37 CFR 1.137(b), filed July 11, 2008, to revive the above-identified application.

The petition is **GRANTED**.

The two-month period for filing an appeal brief under 37 CFR 41.37 (accompanied by the fee required by 37 CFR 41.20(b)(2)), runs from the date of this decision.

This application became abandoned for failure to timely file a reply within the meaning of 37 CFR 1.113 to the final Office action of January 24, 2006. The proposed reply required for consideration of a petition to revive must be a Notice of Appeal (and appeal fee required by 37 CFR 41.20(b)(2)), an amendment that *prima facie* places the application in condition for allowance, a Request for Continued Examination (RCE) and submission (37 CFR 1.114), or the filing of a continuing application under 37 CFR 1.53(b). See MPEP 711.03(c)(II)(A)(2). Accordingly, the date of abandonment of this application is April 25, 2006.

The petition satisfies the requirements of 37 CFR 1.137(b) in that petitioner has supplied (1) the reply in the form of a Notice of Appeal; (2) the petition fee of 1500; and (3) a proper statement of unintentional delay.

Telephone inquiries concerning this decision should be directed to Monica A. Graves at (571) 272-7253.

This application is being referred to Technology Center AU 2617 to await the filing of an appeal brief or for such other appropriate reply as may be submitted to continue prosecution of the application.

for

Brian W. Brown
Petitions Examiner
Office of Petitions

UNITED STATES PATENT AND TRADEMARK OFFICE

Commissioner for Patents
United States Patent and Trademark Office
P.O. Box 1450
Alexandria, VA 22313-1450
www.uspto.gov

NXP, B.V.
NXP INTELLECTUAL PROPERTY & LICENSING
1109 MCKAY DRIVE, M/S41-SJ
SAN JOSE, CA 95131

COPY MAILED
JAN 07 2010

In re Application of	:	
Reinhard MEINDL, et *al.*	:	
Application No. 10/023,118	:	DECISON ON PETITION
Filed: December 17, 2001	:	UNDER 37 CFR 1.137(b)
Attorney Docket No. **AT 000071**	:	

This is a decision on the petition under the unintentional provisions of 37 CFR 1.137(b), filed November 19, 2009, to revive the above-identified application.

The petition is **GRANTED**.

This application became abandoned as a result of petitioner's failure to file an appeal brief (and fee required by 37 CFR 41.20(b)(2)) within the time period provided in 37 CFR 41.37(a)(1). As an appeal brief (and appeal brief fee) was not filed within two (2) months of the Notice of Appeal and Petition Decision mailed February 17, 2009, and no extensions of time under the provisions of 37 CFR 1.136(a) were obtained, the appeal was dismissed and the proceedings as to the rejected claims were terminated. See 37 CFR 1.197(b). As no claim was allowed, the application became abandoned on April 18, 2009. *See* MPEP 1215.04.

It is not apparent whether the person signing the statement of unintentional delay was in a position to have firsthand or direct knowledge of the facts and circumstances of the delay at issue. Nevertheless, such statement is being treated as having been made as the result of a reasonable inquiry into the facts and circumstances of such delay. See 37 CFR 10.18(b) and Changes to Patent Practice and Procedure; Final Rule Notice, 62 Fed. Reg. 53131, 53178 (October 10, 1997), 1203 Off. Gaz. Pat. Office 63, 103 (October 21, 1997). In the event that such an inquiry has not been made, petitioner must make such an inquiry. If such inquiry results in the discovery that it is not correct that the entire delay in filing the required reply from the due date for the reply until the filing of a grantable petition pursuant to 37 CFR 1.137(b) was unintentional, petitioner must notify the Office.

There is no indication that the person signing the petition was ever given a power of attorney to prosecute the application. If the person signing the petition desires to receive future correspondence regarding this application, the appropriate power of attorney document must be submitted. While a courtesy copy of this decision is being mailed to the person signing the petition, all future correspondence will be directed to the address currently of record until appropriate instructions are received.

The petition satisfies the requirements of 37 CFR 1.137(b) in that petitioner has supplied (1) the reply in the form of a Request for Continued Examination (RCE) and fee of $810, and the submission required by 37 CFR 1.114; (2) the petition fee of $1620; and (3) an adequate statement of unintentional delay.

Telephone inquiries concerning this decision should be directed to Monica A. Graves at (571) 272-7253.

This application is being referred to Technology Center AU 2617 for processing of the RCE and for appropriate action by the Examiner in the normal course of business on the amendment submitted in accordance with 37 CFR 1.114.

Brian W. Brown
Petitions Examiner
Office of Petitions

cc: **THOMAS H. HAM**
WILSON & HAM
1811 SANTA RITA ROAD, SUITE 130
PLEASANTON, CA 94566

UNITED STATES PATENT AND TRADEMARK OFFICE

COMMISSIONER OF PATENTS

March 21, 2005

Robert W. Mullcahy
Patent Counsel, Applied Materials, Inc.
Legal Affairs Dept.
P. O. Box 450A
Santa Clara, CA 95052

In re Application of:
Jong Hyun Yoo et al
Serial No: 10/023,125 On Petition
Filing Date: December 17, 2001
For: **PULSE NUCLEATION ENHANCED NUCLEATION TECHNIQUE FOR IMPROVED STEP COVER AND BETTER GAP FILL FOR WCVD PROCESS**

In response to the petitions received on July 29, 2004, to withdraw the holding of abandonment in the above application.

The petition is Granted.

The above-identified application became abandoned for failure to reply with the meaning of 37 C.D.R 1.113 in a timely manner to the Notice to File Missing Parts of Nonprovisional Application mailed February 21, 2002. Which set forth a shortened statutory period for reply of two months. Accordingly, the above-identified application became abandoned April 23, 2002. The notice of abandonment was mailed on June 25, 2004.

The evidence submitted is sufficient to establish that the petitioners responded to the Notice to File Missing Parts of Nonprovisional Application on August 18, 2002 with 5 months of extension of time.

The application was abandoned in error. The office regrets any inconvenience this may have caused the client.

Telephone inquiries concerning this application may be directed to Doshie E. Day (703) 308-3640.

Doshie E. Day
Program Management Assistant
Office of Initial Patent Examination

UNITED STATES PATENT AND TRADEMARK OFFICE

COMMISSIONER FOR PATENTS
UNITED STATES PATENT AND TRADEMARK OFFICE
P.O. BOX 1450
ALEXANDRIA, VA 22313-1450
www.uspto.gov

Paper No. 7

PHILIPS ELECTRONICS NORTH AMERICA CORPORATION
INTELLECTUAL PROPERTY & STANDARDS
1109 MCKAY DRIVE, M/S-41SJ
SAN JOSE, CA 95131

COPY MAILED

MAR 0 1 2004

OFFICE OF PETITIONS

In re Application of
Nguyen et al.
Application No. 10/023,142
Filed: December 18, 2001
Attorney Docket No. NL 000730

ON PETITION

This is a decision on the petition under 37 C.F.R. § 1.137(b), filed February 11, 2004, to revive the above-identified application.

The petition is **granted.**

The above-identified application became abandoned for failure to reply in a timely manner to the Notice to File Missing Parts of Application (Notice) mailed January 28, 2002. The Notice set a period for reply of two (2) months from the mail date of the Notice. No extensions of time under the provisions of 37 CFR 1.136(a) were obtained. Accordingly, the above-identified application became abandoned on March 29, 2002. A Notice of Abandonment was mailed on January 8, 2004.

Petitioner has met the requirements to revive the above-identified application pursuant to 37 CFR 1.137(b).

The file is now being forwarded to the Office of Initial Patent Examination for further processing.

Telephone inquiries should be directed to the undersigned at (703) 306-0482.

Liana Chase
Petitions Examiner
Office of Petitions
Office of the Deputy Commissioner
for Patent Examination Policy

SPE: L. Caputo

Mynette Stepon 7580

SPE RESPONSE FOR CERTIFICATE OF CORRECTION

Paper No.: _____

DATE : 2/12/09

TO SPE OF : ART UNIT 2855

SUBJECT : Request for Certificate of Correction for Appl. No.: 10023162 Patent No.: 6516664 B2

Please respond to this request for a certificate of correction within 7 days.

FOR IFW FILES:

Please review the requested changes/corrections as shown in the **COCIN** document(s) in the IFW application image. No new matter should be introduced, nor should the scope or meaning of the claims be changed.

Please complete the response (see below) and forward the completed response to scanning using document code **COCX**.

FOR PAPER FILES:

Please review the requested changes/corrections as shown in the attached certificate of correction. Please complete this form (see below) and forward it with the file to:

Certificates of Correction Branch (CofC)
South Tower - 9A22
Palm Location 7580
You can fax the Directors/SPE response to 571-270-9990

LAMONTE NEWSOME
Certificates of Correction Branch
703-308-9390 ext. 112

Thank You For Your Assistance

The request for issuing the above-identified correction(s) is hereby:
Note your decision on the appropriate box.

- [x] **Approved** — **All** changes apply.
- [ ] **Approved in Part** — Specify below which changes **do not** apply.
- [ ] **Denied** — State the reasons for denial below.

Comments: _____

Lin Caputo AU2855 5/15/09

SPE RESPONSE FOR CERTIFICATE OF CORRECTION

SPE

Art Unit